US012385217B2

(12) **United States Patent**
Miura et al.

(10) **Patent No.: US 12,385,217 B2**
(45) **Date of Patent: Aug. 12, 2025**

(54) **WORKING MACHINE**

(71) Applicant: **KUBOTA CORPORATION**, Osaka (JP)

(72) Inventors: **Takashi Miura**, Osaka (JP); **Tokio Sakata**, Osaka (JP)

(73) Assignee: **KUBOTA CORPORATION**, Osaka (JP)

(*) Notice: Subject to any disclaimer, the term of this patent is extended or adjusted under 35 U.S.C. 154(b) by 0 days.

(21) Appl. No.: **18/744,942**

(22) Filed: **Jun. 17, 2024**

(65) **Prior Publication Data**

US 2025/0003185 A1 Jan. 2, 2025

(30) **Foreign Application Priority Data**

Jun. 30, 2023 (JP) 2023-107903

(51) **Int. Cl.**
E02F 9/08 (2006.01)

(52) **U.S. Cl.**
CPC ***E02F 9/0883*** (2013.01)

(58) **Field of Classification Search**
CPC E02F 9/0883; E02F 9/0866; B60K 11/02; B60K 11/04
See application file for complete search history.

(56) **References Cited**

U.S. PATENT DOCUMENTS

9,266,422	B2 *	2/2016	Narita	F02B 77/13
11,085,352	B2 *	8/2021	Fujii	E02F 9/0866
11,230,212	B2 *	1/2022	Ichihara	E02F 9/0883
11,866,101	B2 *	1/2024	Aihara	B60N 3/048
2013/0112842	A1	5/2013	Narita	
2018/0245310	A1	8/2018	Kumagai et al.	
2019/0119883	A1	4/2019	Ichihara et al.	
2023/0315140	A1	10/2023	Yoshida et al.	
2024/0229422	A1 *	7/2024	Wakata	E02F 9/16
2024/0328111	A1 *	10/2024	Wakata	B60K 26/00

FOREIGN PATENT DOCUMENTS

JP	2022-085490 A	6/2022
WO	2017/061207 A1	4/2017

OTHER PUBLICATIONS

European Search Report, dated Dec. 4, 2024, in European Patent Office (EPO) family member Application No. 24 18 2103.2.

* cited by examiner

Primary Examiner — Paul N Dickson
Assistant Examiner — Tiffany L Webb
(74) *Attorney, Agent, or Firm* — GREENBLUM & BERNSTEIN, P.L.C.

(57) **ABSTRACT**

A working machine includes a machine body; a prime mover mounted on the machine body; a peripheral device disposed in a periphery of the prime mover; and an attachment bracket to support the peripheral device. The attachment bracket includes a base member to support the peripheral device in a vicinity of a driven unit to be driven with power of the prime mover, and a pressing member coupled to the base member, to hold the peripheral device between the pressing member and the base member.

11 Claims, 12 Drawing Sheets

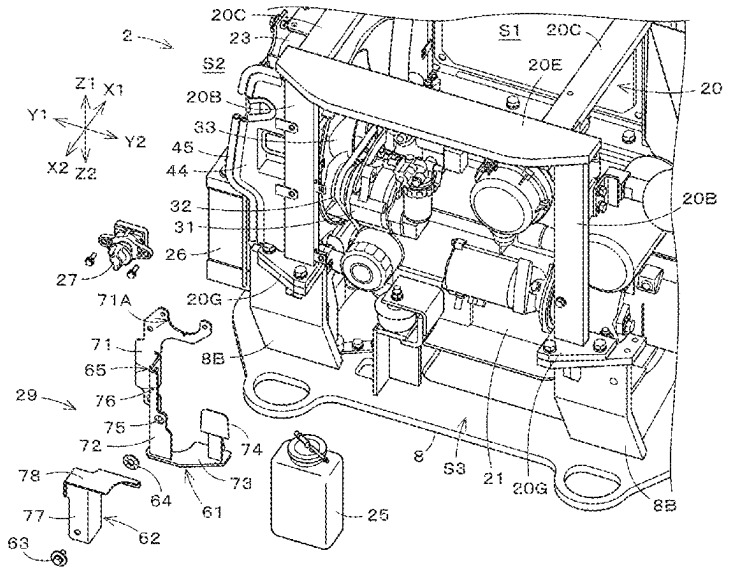

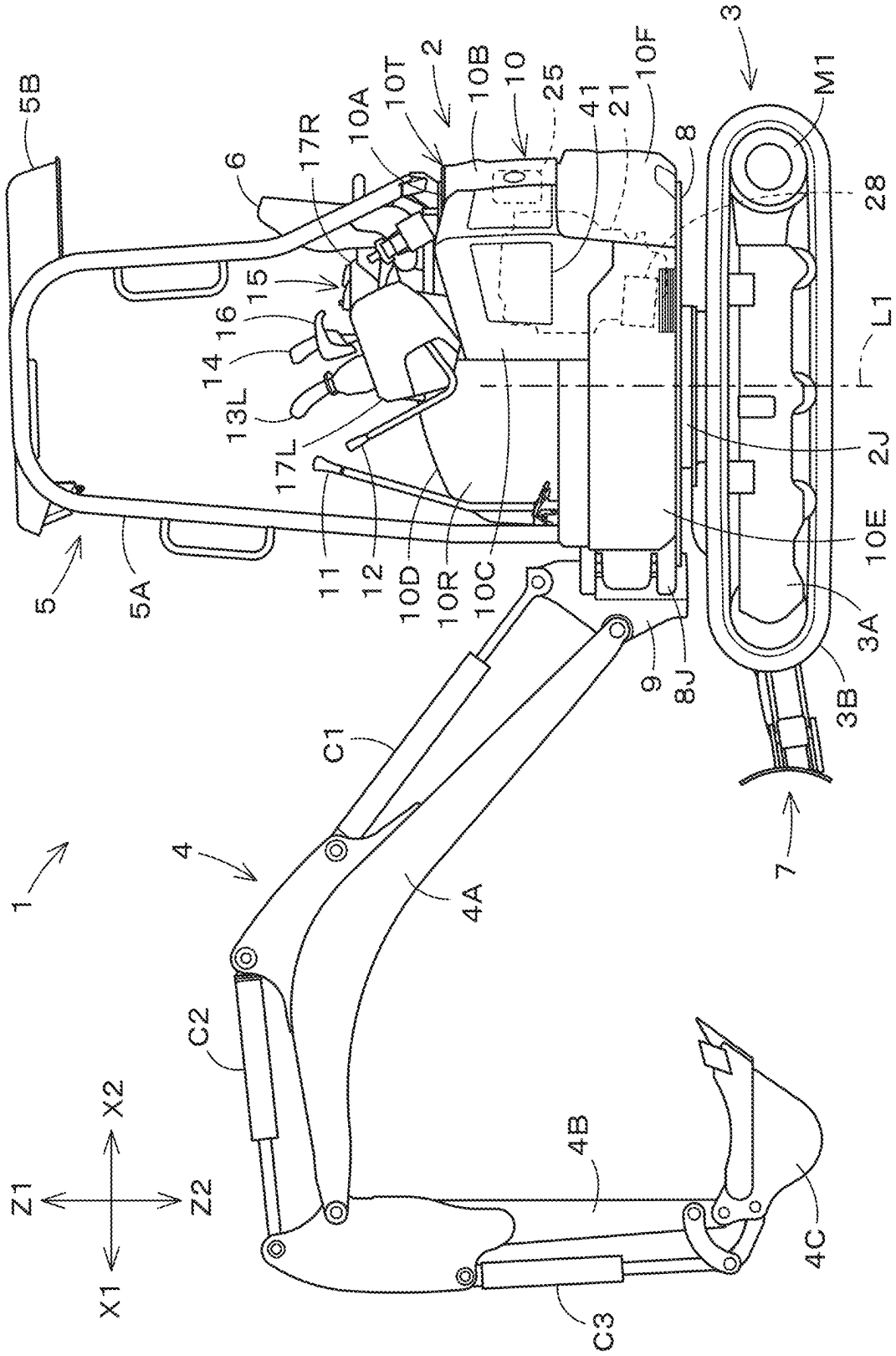
1
2
3
3A
3B
4
4A
4B
4C
5
5A
5B
6
7
8
8J
9
10
10A
10B
10C
10D
10E
10F
10O
10R
10T
11
12
13L
14
15
16
17L
17R
21
25
28
2J
41
C1
C2
C3
L1
M1
X1
X2
Z1
Z2

Fig.1

Fig.2

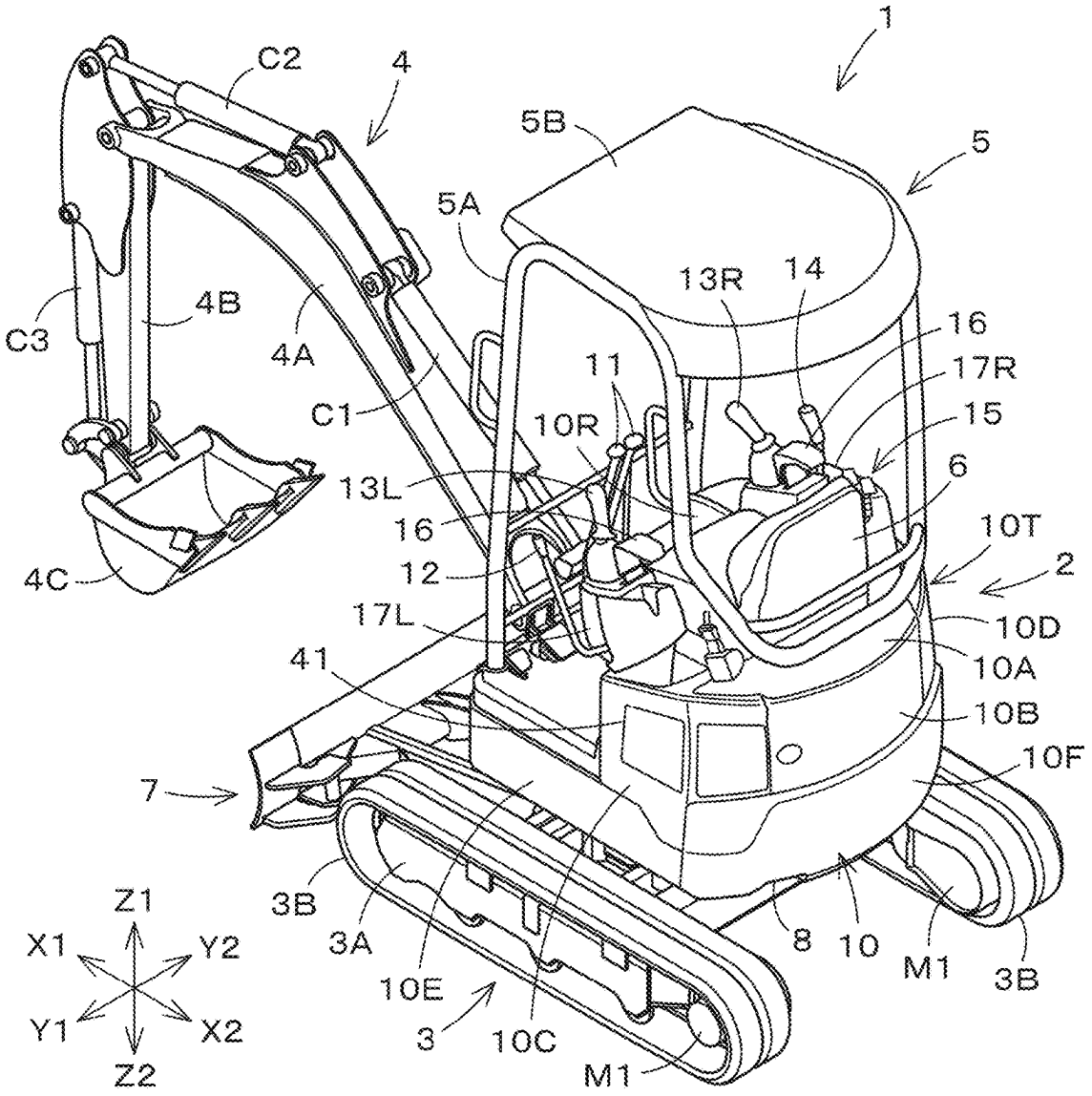
1
C2
4
5B
5
5A
13R
14
16
17R
15
6
10T
2
10D
10A
10B
10F
C3
4B
4A
C1
11
10R
13L
16
12
17L
41
4C
7
3B
3A
10E
3
10C
M1
8
10
M1
3B
Z1
X1
Y2
Y1
X2
Z2

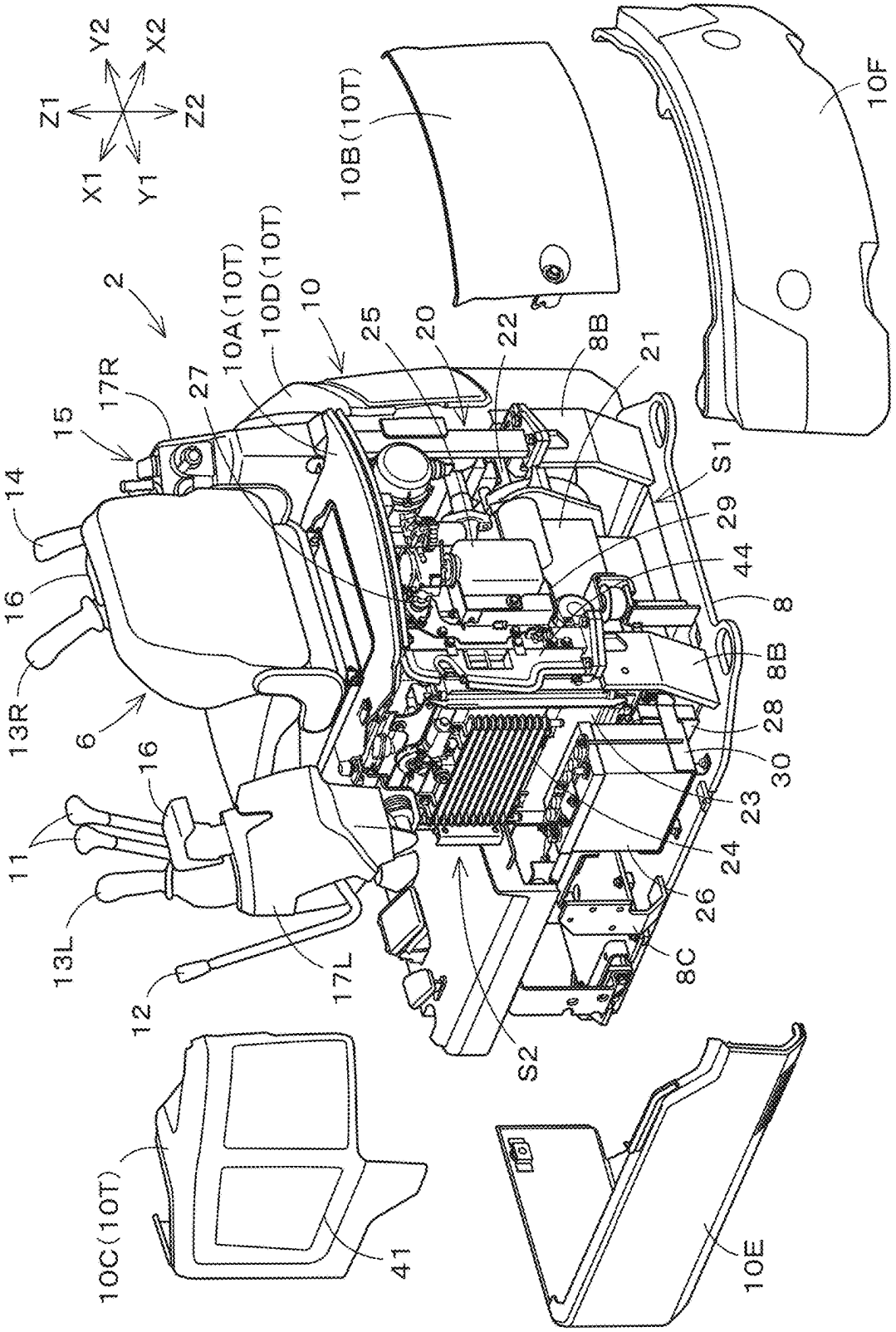
Z1
Z2
X1
X2
Y1
Y2
2
10
10A(10T)
10B(10T)
10C(10T)
10D(10T)
10E
10F
6
8
8B
8C
11
12
13L
13R
14
15
16
17L
17R
20
21
22
23
24
25
26
27
28
29
30
41
44
S1
S2

Fig.3

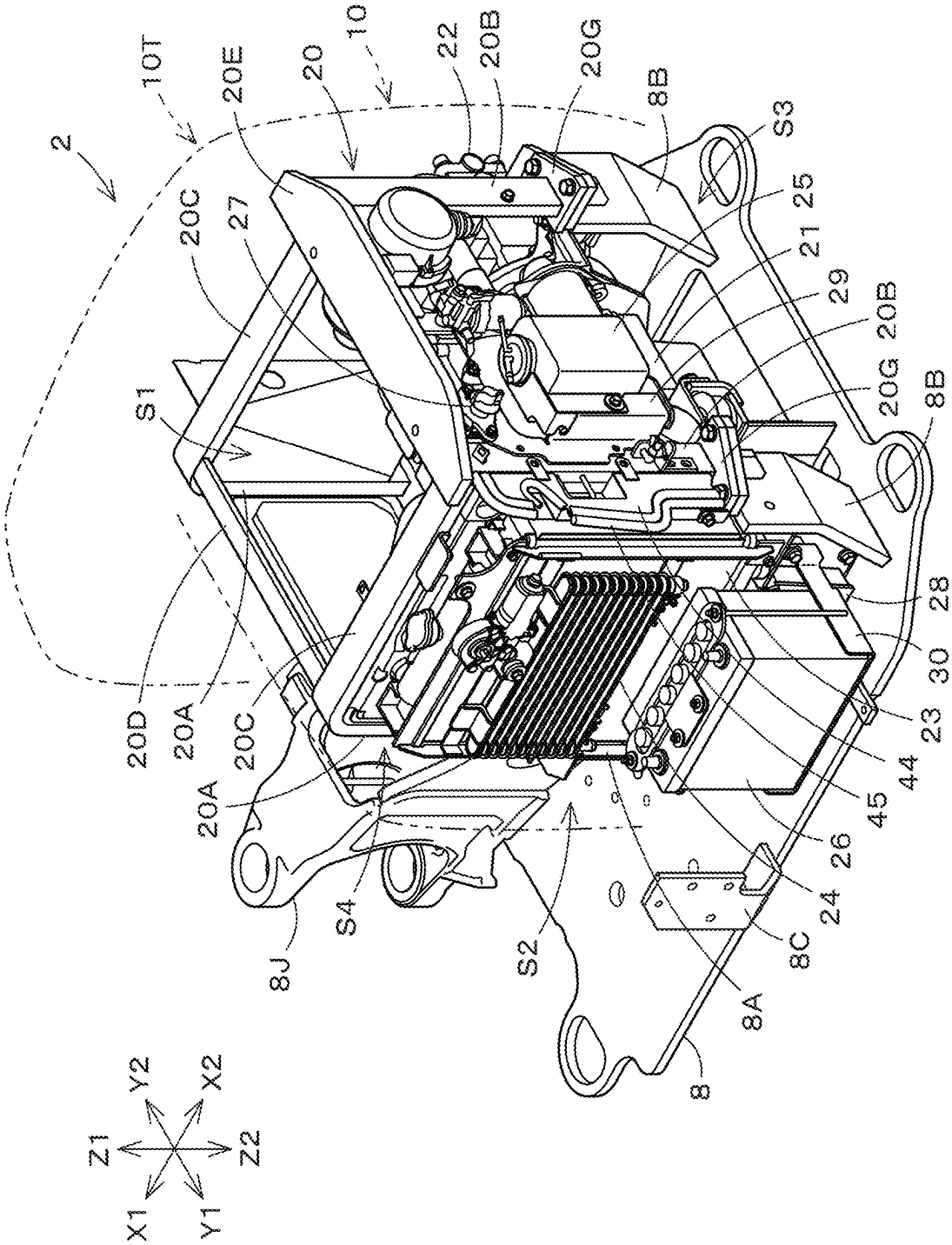
2
10T
20E
20
10
22
20B
20G
8B
S3
25
21
29
20B
20G
8B
20C
27
S1
28
30
23
44
45
26
24
8C
8A
8
S2
S4
8J
20A
20C
20A
20D
Y2
X2
Z1
Z2
X1
Y1

Fig.4

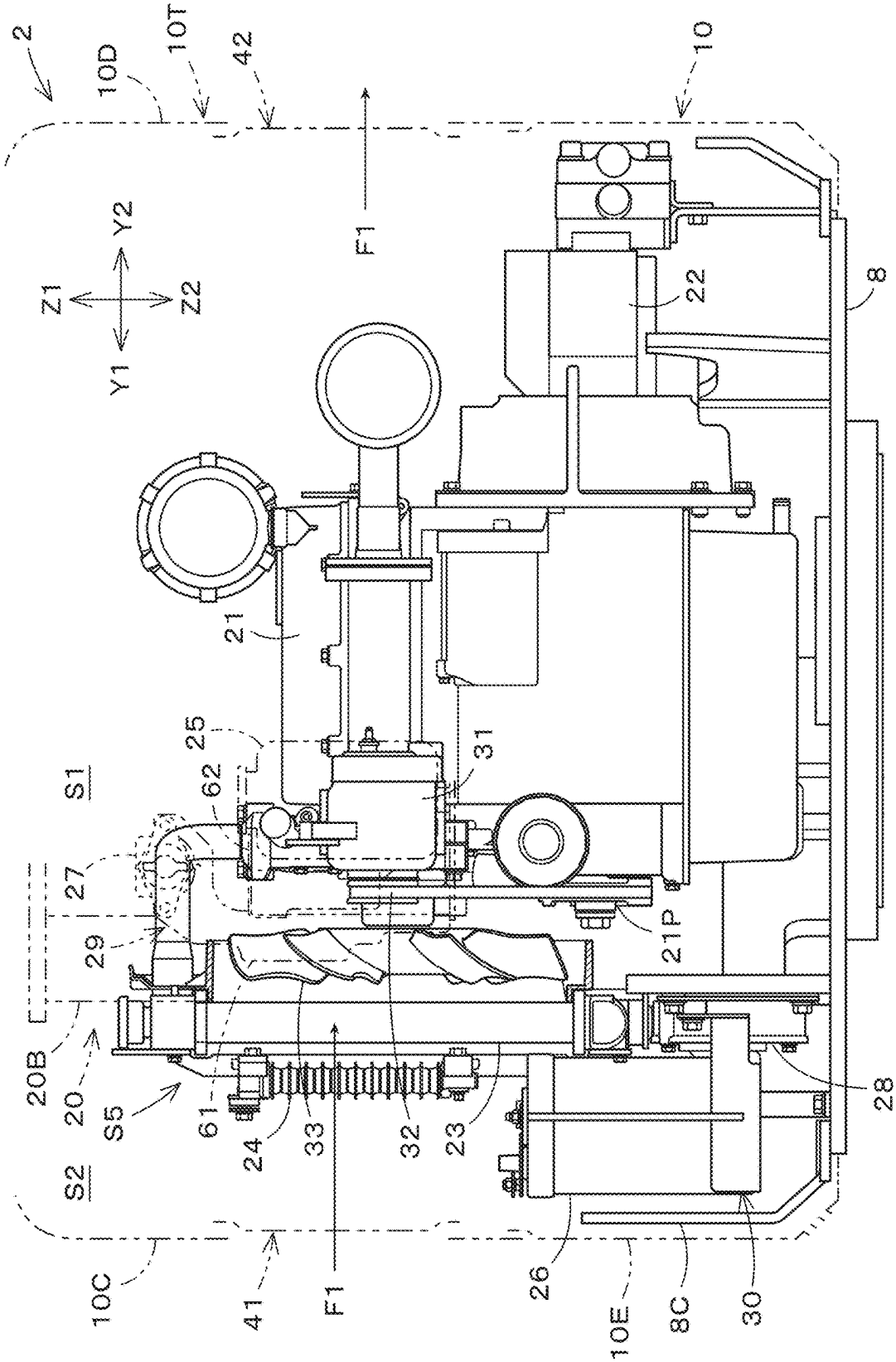
2
10D
10T
42
10
F1
Y2
Z1
Z2
Y1
22
8
21
25
31
S1
62
27
29
21P
20B
20
S5
61
24
33
32
23
28
S2
10C
41
F1
26
10E
8C
30

Fig.5

Fig.6

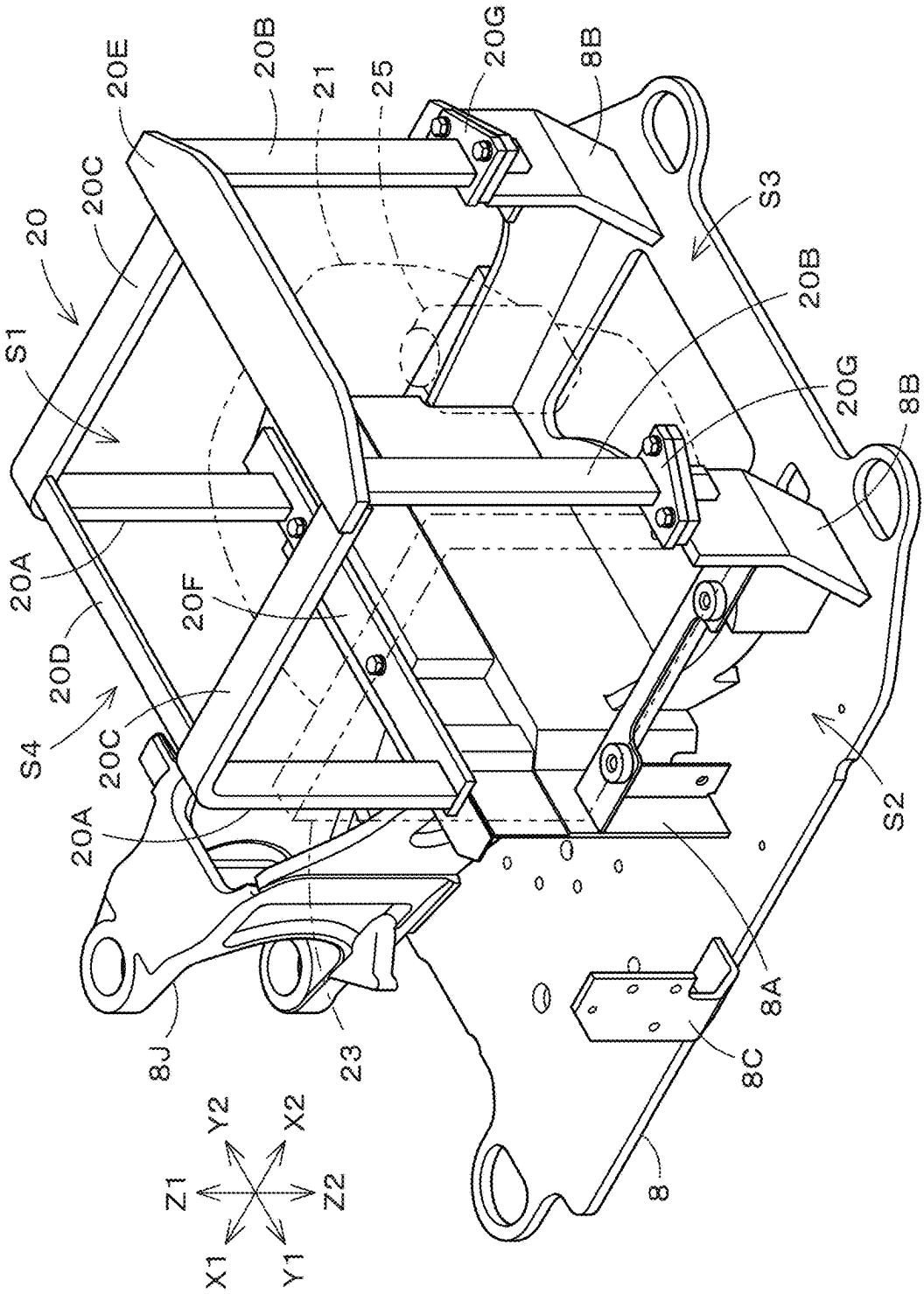
20
20E
20B
21
25
20G
8B
20C
S1
S3
20B
20G
8B
20A
20F
20D
S4
20C
20A
S2
8A
8J
23
8C
8
Y2
X2
Z1
Z2
X1
Y1

Fig.7

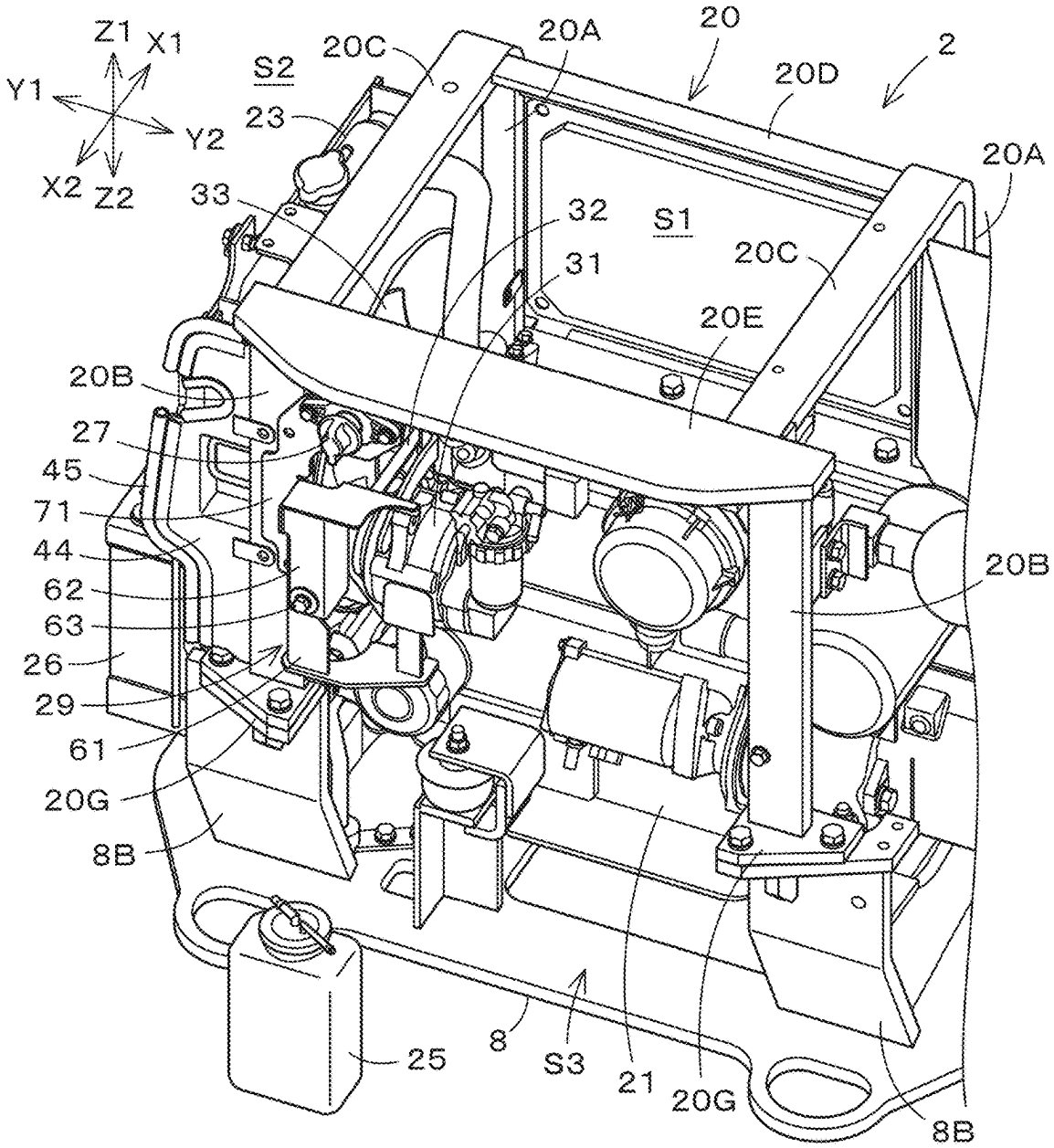
Z1
X1
Y1
Y2
X2
Z2
S2
20C
20A
20
2
20D
23
20A
33
32
S1
31
20C
20E
20B
27
45
71
44
62
63
26
29
61
20G
8B
20B
25
8
S3
21
20G
8B

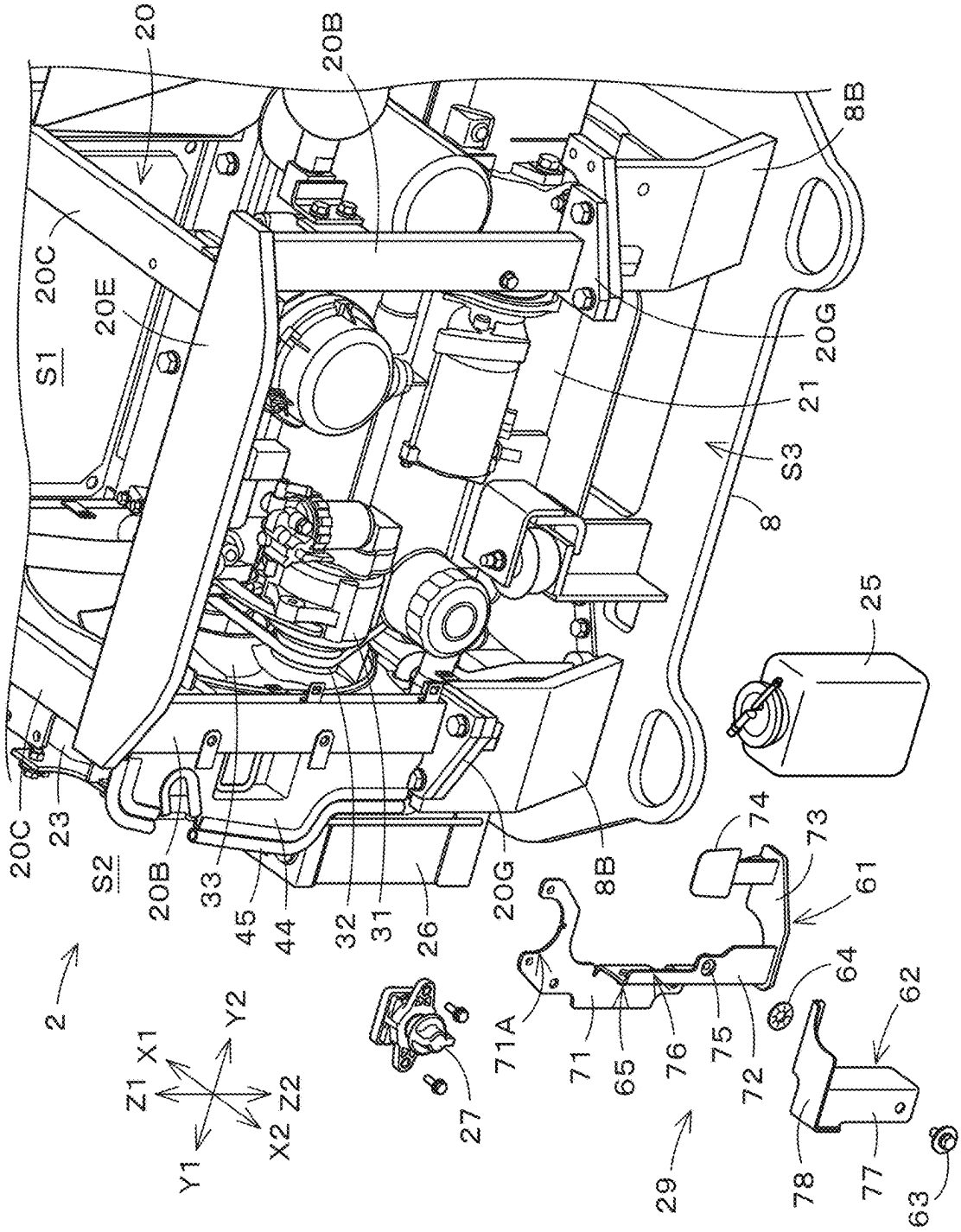
20
20B
8B
20C
20E
S1
20G
21
S3
8
25
20C
23
S2
20B
33
45
44
32
31
26
20G
8B
74
73
61
64
62
2
Z1
X1
Y2
Z2
X2
Y1
27
71A
71
65
76
75
72
29
78
77
63

Fig.8

Fig.9

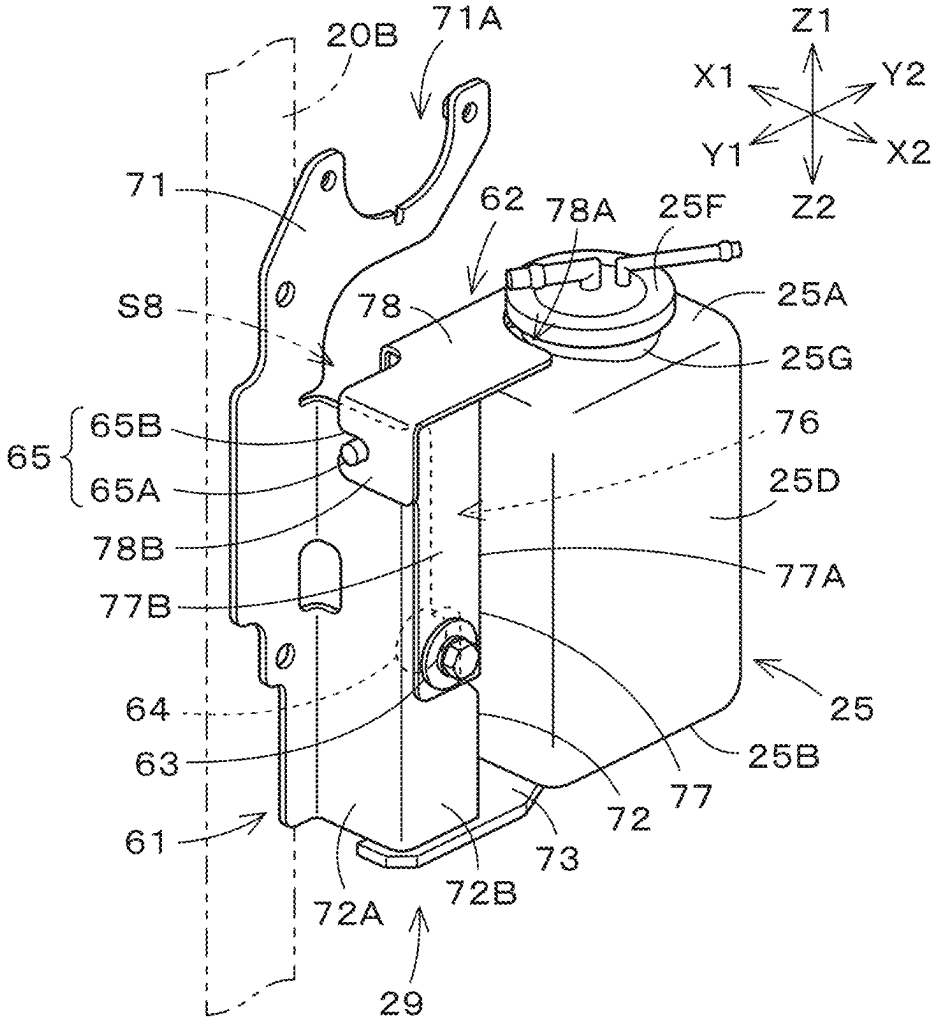
20B
71A
Z1
X1
Y2
Y1
X2
Z2
71
62
78A
25F
S8
78
25A
25G
65
65B
65A
76
25D
78B
77A
77B
64
25
63
25B
77
72
61
73
72A
72B
29

Fig.10

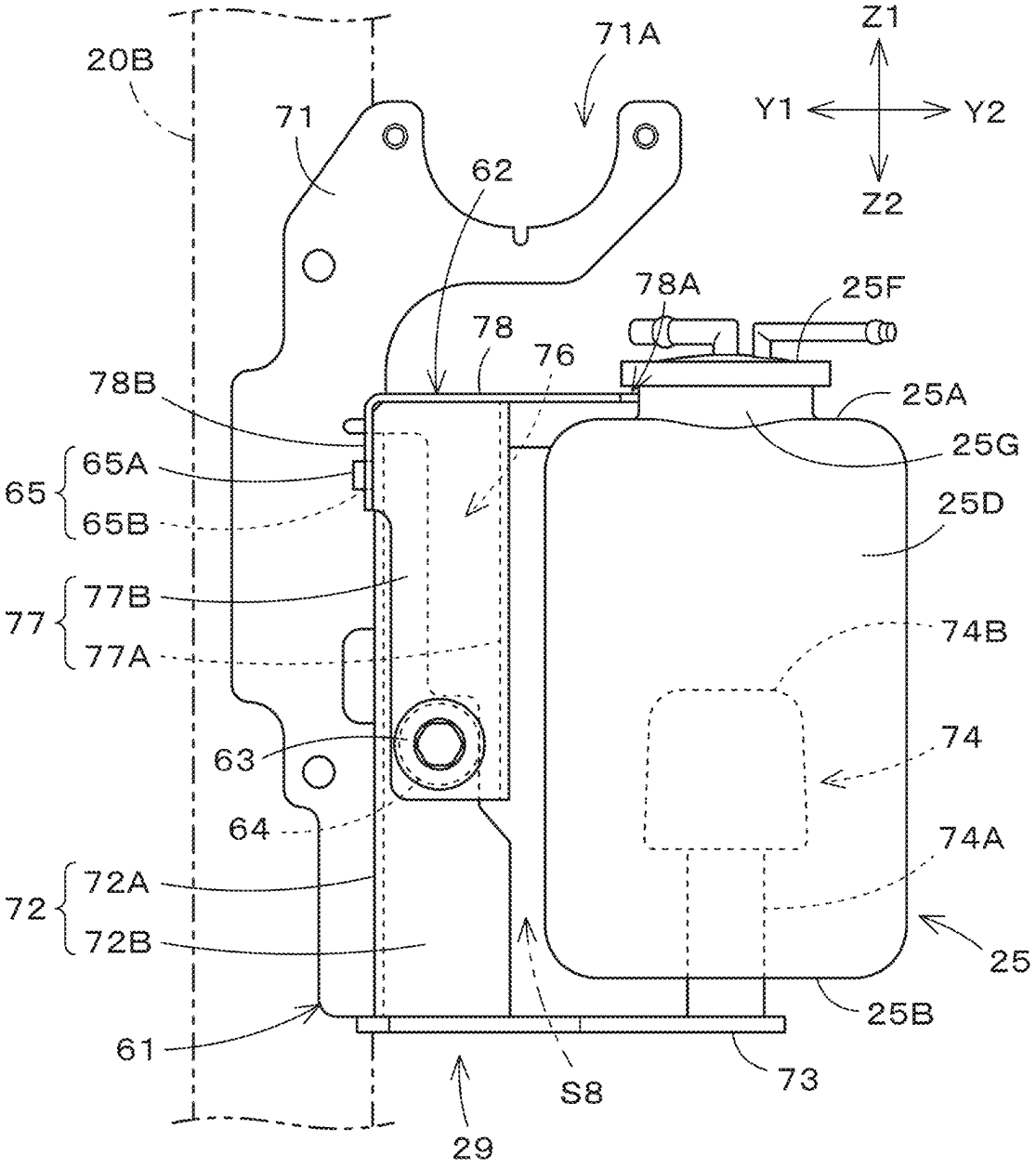
20B
71
71A
62
Z1
Y1
Y2
Z2
78A
25F
78
76
78B
25A
25G
65
65A
65B
25D
77
77B
77A
74B
63
74
64
74A
72
72A
72B
25
25B
61
73
S8
29

Fig.11

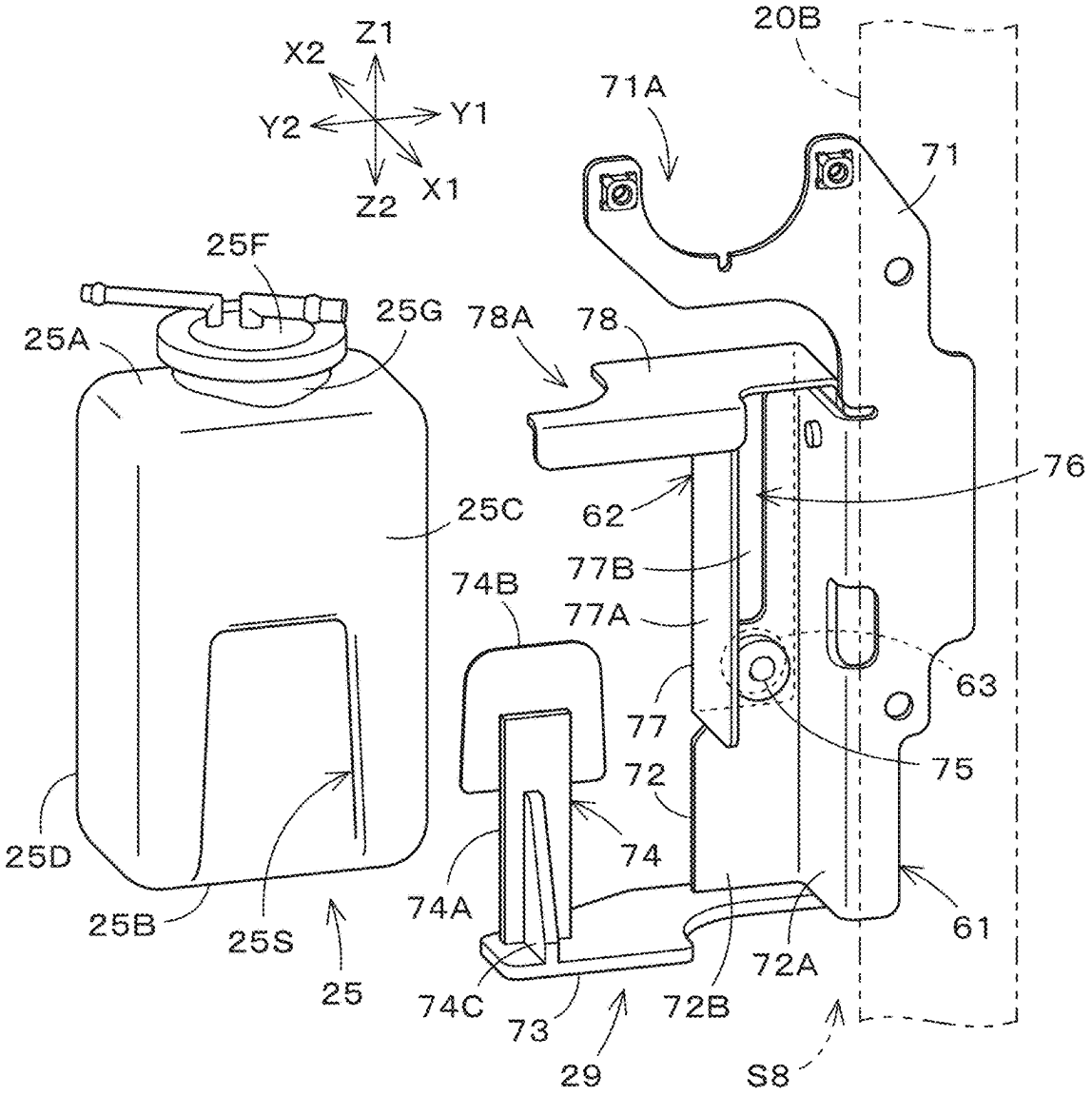
Z1
X2
Y2
Y1
X1
Z2
20B
71A
71
25F
25G
78A
78
25A
76
62
25C
77B
74B
77A
63
77
75
72
74
25D
74A
61
25B
25S
72A
25
74C
73
72B
29
S8

Fig.12

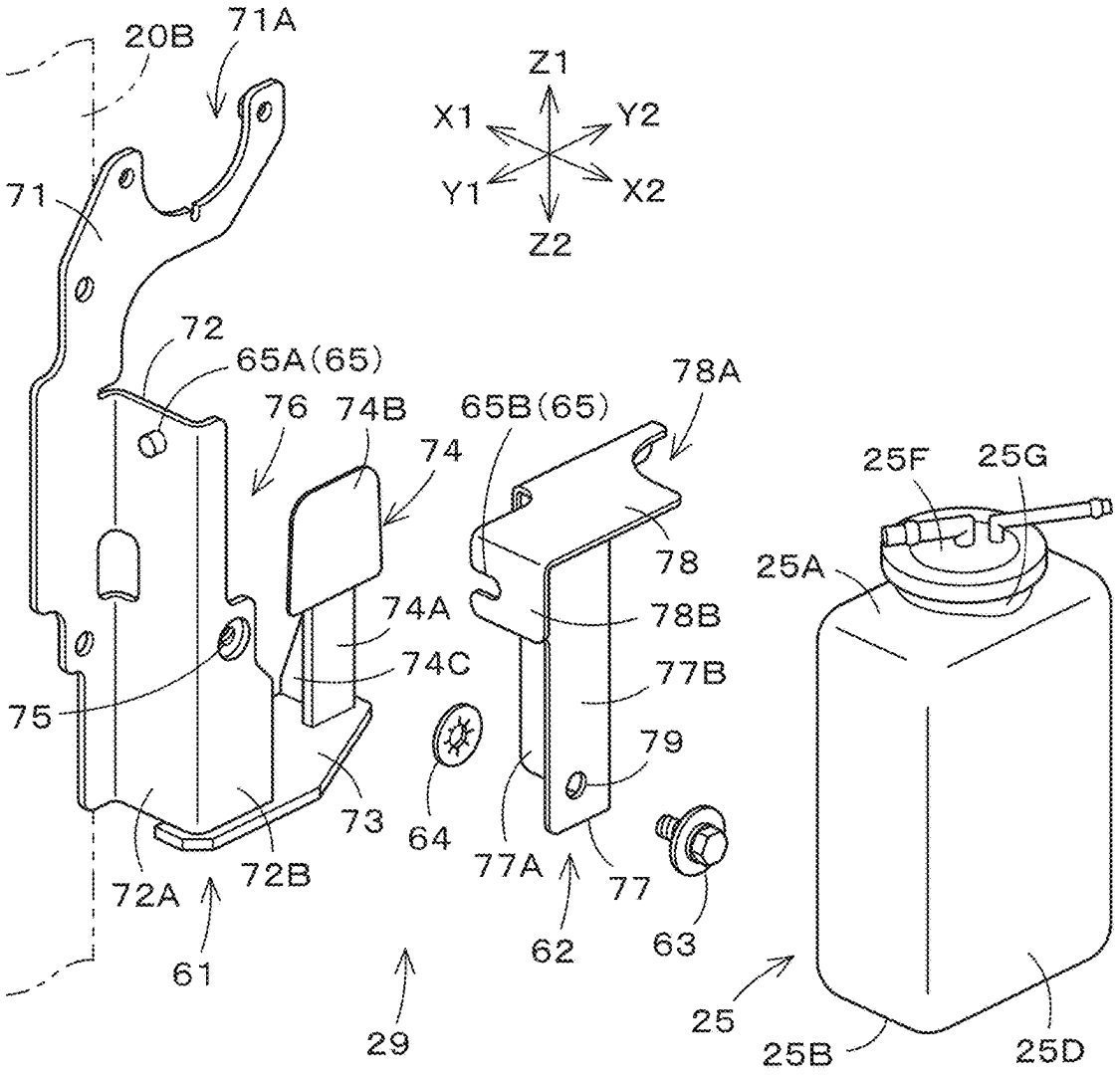
20B
71A
Z1
X1
Y2
Y1
X2
Z2
71
72
65A(65)
76
74B
65B(65)
78A
74
25F
25G
78
25A
74A
78B
74C
77B
75
79
73
64
77A
77
72A
72B
62
63
61
29
25
25B
25D

WORKING MACHINE

CROSS REFERENCE TO RELATED APPLICATIONS

This application claims the benefit of priority to Japanese Patent Application No. 2023-107903 filed on Jun. 30, 2023. The entire contents of this application are hereby incorporated herein by reference.

BACKGROUND OF THE INVENTION

1. Field of the Invention

The present invention relates to a working machine such as a backhoe.

2. Description of the Related Art

In a working machine disclosed in Japanese Unexamined Patent Application Publication No. 2022-85490, a peripheral device such as a reserve tank that stores a coolant for a prime mover is disposed in the periphery of a prime mover.

SUMMARY OF THE INVENTION

Meanwhile, in this type of working machine, a cover body defining an outer shell of a machine body is configured to be openable/closable, and it is possible to inspect a prime mover and the like by opening the cover body. However, if a worker leans against or strongly touches the peripheral device disposed in the periphery of the prime mover during inspection work, a bracket supporting the peripheral device may be deformed or the peripheral device may fall off from the bracket. Then, the worker may inadvertently touch a driven unit, such as a cooling fan, an alternator, or a power transmission belt, that is driven with power of the prime mover.

The present invention is made to solve such a problem, and an object of the present invention is to improve support strength for a peripheral device.

The following is a technical solution employed by present invention to attain the object.

A working machine according to an aspect of the present invention includes a machine body; a prime mover mounted on the machine body; a peripheral device disposed in a periphery of the prime mover; and an attachment bracket to support the peripheral device. The attachment bracket includes a base member to support the peripheral device in a vicinity of a driven unit to be driven with power of the prime mover, and a pressing member coupled to the base member, to hold the peripheral device between the pressing member and the base member.

The base member may include a first coupling frame portion defining a coupling portion to the pressing member. The first coupling frame portion may be formed in a columnar shape extending in an up-down direction of the machine body.

The working machine may include a cover body defining an outer shell of the machine body, and a support frame vertically provided inside the machine body, to support the cover body. The first coupling frame portion may extend along a gap between the support frame and the peripheral device.

The pressing member may include a second coupling frame portion coupled to the first coupling frame portion.

The second coupling frame portion may be formed in a columnar shape extending along the first coupling frame portion.

The pressing member may include a second coupling frame portion defining a coupling portion to the base member. The second coupling frame portion may be formed in a columnar shape extending in an up-down direction of the machine body.

The base member may include a lower frame portion to support the peripheral device from below. The pressing member may have an upper frame portion to hold the peripheral device from above.

The base member may include a first coupling frame portion defined by a plate-shaped member that is formed in an L shape when viewed from above and that has a first side surface portion and a second side surface portion, and having a columnar shape long in an up-down direction, and a lower frame portion laterally extending from a lower portion of the first coupling frame portion such that plate surfaces of the lower frame portion face in the up-down direction. The pressing member may include a second coupling frame portion defined by a plate-shaped member that is formed in an L shape when viewed from above and that has a third side surface portion and a fourth side surface portion, and having a columnar shape long in the up-down direction, and an upper frame portion laterally extending from an upper portion of the second coupling frame portion such that plate surfaces of the upper frame portion face in the up-down direction. The peripheral device may be held in a state of being sandwiched between the lower frame portion and the upper frame portion from above and below.

The base member may further include a holder portion extending upward from the lower frame portion. The peripheral device may be held in a state in which the peripheral device is sandwiched between the lower frame portion and the upper frame portion from above and below and a surface of the peripheral device near the driven unit is supported by the holder portion.

The holder portion may include a holder pillar extending upward from the lower frame portion and an insertion piece coupled to the holder pillar. The peripheral device may include an insertion groove in the surface near the driven unit. The surface of the peripheral device near the driven unit may be supported by the holder portion by the insertion piece being fitted into the insertion groove.

The upper frame portion may have a notch portion formed in a substantially arc shape. The peripheral device may have a neck portion protruding upward. The neck portion may be fitted into the notch portion.

The base member and the pressing member may be disposed at positions partially or entirely overlapping the driven unit as viewed from rear of the machine body.

The base member may have a window hole through which the driven unit is visually recognizable from the rear of the machine body.

The attachment bracket may include a coupling member to detachably couple the pressing member to the base member.

The attachment bracket may have an engagement portion to detachably engage the pressing member with the base member.

The peripheral device may be a reserve tank formed in a bottomed cylindrical shape having a fluid supply port portion in an upper surface portion, to store a coolant for the prime mover. The lower frame portion may extend along a

bottom surface portion of the reserve tank. The upper frame portion may extend along the upper surface portion of the reserve tank.

The above and other elements, features, steps, characteristics and advantages of the present invention will become more apparent from the following detailed description of the example embodiments with reference to the attached drawings.

BRIEF DESCRIPTION OF THE DRAWINGS

A more complete appreciation of example embodiments of the present invention and many of the attendant advantages thereof will be readily obtained as the same becomes better understood by reference to the following detailed description when considered in connection with the accompanying drawings described below.

FIG. **1** is a left side view of a working machine.

FIG. **2** is a left rear perspective view of the working machine.

FIG. **3** is a left rear perspective view of a machine body in a state in which some cover bodies are separated.

FIG. **4** is a left rear perspective view illustrating an internal structure of the machine body.

FIG. **5** is a rear view illustrating the internal structure of the machine body.

FIG. **6** is a left rear perspective view of a support frame.

FIG. **7** is a partially exploded perspective view around a rear space of the support frame.

FIG. **8** is a partially exploded perspective view around the rear space of the support frame.

FIG. **9** is a partially exploded perspective view of an attachment bracket and a reserve tank.

FIG. **10** is a rear view of the attachment bracket and the reserve tank.

FIG. **11** is a front perspective view of the attachment bracket and the reserve tank.

FIG. **12** is a rear perspective view of the attachment bracket and the reserve tank.

DETAILED DESCRIPTION OF THE EXAMPLE EMBODIMENTS

Example embodiments will now be described with reference to the accompanying drawings, wherein like reference numerals designate corresponding or identical elements throughout the various drawings. The drawings are to be viewed in an orientation in which the reference numerals are viewed correctly.

Hereinafter, embodiments of the present invention will be described with reference to the drawings.

As illustrated in FIGS. **1** and **2**, a working machine **1** of the present embodiment is a backhoe including a machine body (turning base) **2**, a traveling device **3**, and a working device **4**. A canopy **5** is mounted on the machine body **2**. An operator's seat **6** on which an operator is seated is provided inside the canopy **5**. The canopy **5** is a protection mechanism that protects the operator's seat **6**, and includes a ROPS **5**A and a roof **5**B. Note that the working machine **1** is not limited to the backhoe, and may be another type of working machine. Also, instead of the canopy **5**, a cabin surrounding the operator's seat **6** may be mounted on the machine body **2**, as a protection mechanism that protects the operator's seat **6**.

In the present embodiment, a direction in which the operator seated on the operator's seat **6** faces (a direction of arrow X**1** in FIGS. **1** and **2**) is referred to as a forward side of the machine body **2**, and a direction opposite thereto (a direction of arrow X**2** in FIGS. **1** and **2**) is referred to as a rearward side of the machine body **2**. Also, the left of the operator (a direction of arrow Y**1** in FIG. **2**) is referred to as a leftward side of the machine body **2**, and a direction opposite thereto (a direction of arrow Y**2** in FIG. **2**) is referred to as a rightward side of the machine body **2**. Further, the upper side of the operator (a direction of arrow Z**1** in FIGS. **1** and **2**) is referred to as an upward side of the machine body **2**, and a direction opposite thereto (a direction of arrow Z**2** in FIGS. **1** and **2**) is referred to as a downward side of the machine body **2**.

The traveling device **3** is a crawler type traveling device that supports the machine body **2** so as to be capable of traveling, and includes a traveling frame **3**A and at least one traveling mechanism **3**B. The traveling frame (track frame) **3**A is a structure body to which the traveling mechanism **3**B is attached on each of the left and right and that supports the machine body **2** from below. The traveling mechanism **3**B is, for example, a crawler. The traveling mechanism **3**B is driven by a traveling motor M**1** provided in the traveling frame **3**A. Note that the traveling device **3** is not limited to of the crawler type, and may be of a wheel type.

The traveling device **3** includes a dozer device **7**. The dozer device **7** is provided at a front portion of the traveling frame **3**A. The dozer device **7** is coupled to a dozer cylinder (hydraulic cylinder) provided in the traveling frame **3**A, and is raised/lowered by the dozer cylinder being extended/contracted.

The working device **4** includes a boom **4**A, an arm **4**B, and a bucket **4**C. Note that, instead of or in addition to the bucket **4**C, another working tool (hydraulic attachment) that can be driven with a hydraulic fluid can be attached to the working machine **1**. Examples of the other working tool include a hydraulic breaker, a hydraulic crusher, an angle broom, an earth auger, a pallet fork, a sweeper, a mower, and a snow blower.

The boom **4**A is pivotally attached to a swing bracket **9** provided at a front portion of the machine body **2** so as to be swingable about a horizontal axis (an axis extending in the left-right direction). The boom **4**A is coupled to the swing bracket **9** via a boom cylinder (hydraulic cylinder) C**1**, and is swung about the horizontal axis by the boom cylinder C**1** being extended/contracted. Note that the swinging of the boom **4**A is an action of raising the boom **4**A upward in front of the machine body **2** or tilting the boom **4**A forward of the machine body **2**.

The arm **4**B is pivotally attached to a distal end portion of the boom **4**A so as to be swingable about a horizontal axis (an axis extending in the left-right direction). The arm **4**B is coupled to the boom **4**A via an arm cylinder (hydraulic cylinder) C**2**, and is swung about the horizontal axis by the arm cylinder C**2** being extended/contracted. Note that the swinging of the arm **4**B is an action of moving a distal end of the arm **4**B toward the machine body **2** (crowding) or away from the machine body **2** (dumping).

The bucket **4**C is pivotally attached to a distal end portion of the arm **4**B so as to be swingable about a horizontal axis (an axis extending in the left-right direction). The bucket **4**C is coupled to the arm **4**B via a bucket cylinder (hydraulic cylinder) C**3**, and is swung about the horizontal axis by the bucket cylinder C**3** being extended/contracted. Note that the swinging of the bucket **4**C is an action of moving a distal end of the bucket **4**C toward the machine body **2** (crowding) or away from the machine body **2** (dumping), and is, for example, an action of shoveling earth and sand or the like

with the bucket **4**C or dropping (discharging) the shoveled earth and sand or the like from the bucket **4**C.

As illustrated in FIG. **1**, the machine body **2** includes a turning base plate **8** defining a bottom portion of the machine body **2**. The turning base plate **8** is formed of a thick plate material, and is supported on an upper portion of the traveling device **3** via a turning bearing **2**J. That is, the machine body **2** is supported so as to be rotatable about a turning axis L**1** of the turning bearing **2**J relative to the traveling device **3**. The turning axis L**1** is the center of rotation of the turning bearing **2**J. The turning base plate **8** is driven to turn about the turning axis L**1** by a turning motor provided in the traveling device **3**.

A support bracket **8**J that supports the working device **4** is provided at a front portion of the turning base plate **8**. The support bracket **8**J is provided to protrude forward from the front portion of the machine body **2**, and the swing bracket **9** is connected to a distal end portion of the support bracket **8**J. The swing bracket **9** is pivotally attached to the distal end portion of the support bracket **8**J so as to be swingable about a vertical axis (an axis extending in the up-down direction). The swing bracket **9** is coupled to a swing cylinder (hydraulic cylinder) provided in the machine body **2**, and is swung about the vertical axis by the swing cylinder being extended/contracted.

As illustrated in FIGS. **1** to **3**, a weight **10**F is provided on a rear portion of the turning base plate **8**. The weight **10**F is a member for balancing the weight with the working device **4**, and is disposed in a rear portion of the machine body **2**. The weight **10**F is formed in a substantially arc shape and is provided so as to cover the inside of the machine body **2** from the rear. That is, the weight **10**F defines a portion of an outer cover (cover body) **10** defining an outer shell of the machine body **2**.

In addition to the operator's seat **6**, a traveling lever **11**, an operation lock lever (unload lever) **12**, manipulating levers **13**L and **13**R, a dozer lever **14**, at least one operation switch **15**, and at least one armrest **16** are provided in an upper portion of the machine body **2**. The traveling lever **11** is an operation member for operating the traveling device **3**, and is provided forward of the operator's seat **6**. The operation lock lever **12** is an operation member for switching a hydraulic actuator mounted on the working machine **1** between an operable state and an inoperable state, and is provided at a left side portion of a left console portion **17**L provided leftward of the operator's seat **6**.

The manipulating levers **13**L and **13**R are operation members for operating the machine body **2** and the working device **4**, and are provided at the left console portion **17**L provided leftward of the operator's seat **6** and a right console portion **17**R provided rightward of the operator's seat **6**, respectively. The dozer lever **14** is an operation member for operating the dozer device **7**, and is provided rightward and rearward of the manipulating lever (right manipulating lever) **13**R at the right console portion **17**R.

The operation switch **15** includes a plurality of operation switches **15** that are operation members for operating various devices provided in the working machine **1** and are provided rearward of the dozer lever **14** at the right console portion **17**R. The armrest **16** is a member on which an elbow and the like of the operator seated on the operator's seat **6** is placed, and is provided rearward of each of the manipulating levers **13**L and **13**R at the left and right console portions **17**L and **17**R.

As illustrated in FIGS. **3** and **4**, a support frame **20** is provided inside the machine body **2**. Additionally, devices such as a prime mover **21**, a hydraulic pump **22**, a radiator **23**, an oil cooler **24**, a reserve tank **25**, a battery **26**, an isolator **27**, and a controller **28** are mounted on the machine body **2**. Note that the outer cover (cover body) **10** defining the outer shell of the machine body **2** includes a hood **10**T that covers the prime mover **21**. The support frame **20** supports the hood **10**T.

The prime mover **21** of the present embodiment is a diesel engine. As illustrated in FIGS. **1** and **3**, the prime mover **21** is disposed in a space (an inner space of the support frame **20**) S**1** located below the operator's seat **6** and inside the support frame **20**. Note that the prime mover **21** is not limited to the diesel engine, and may be a gasoline engine, an electric motor, or a hybrid type prime mover including an engine and an electric motor.

The hydraulic pump **22** is a device that is driven with power of the prime mover **21** and supplies a hydraulic fluid (pressure fluid) to hydraulic actuators such as hydraulic motors or hydraulic cylinders (swing cylinder, dozer cylinder, boom cylinder C**1**, arm cylinder C**2**, bucket cylinder C**3**) provided in the working machine **1**. As illustrated in FIGS. **4** and **5**, the hydraulic pump **22** is connected to a right side portion of the prime mover **21**.

The radiator **23** is a cooler that cools a coolant that is circulated and supplied to the prime mover **21**. The oil cooler **24** is a cooler that cools a hydraulic fluid that is supplied to the hydraulic actuators. The radiator **23** and the oil cooler **24** are both disposed in a space S**2** located leftward of the support frame **20** in the outer cover **10**.

The reserve tank **25** is a device that stores the coolant for the prime mover **21**. As illustrated in FIGS. **3** and **4**, the reserve tank **25** is disposed in a space S**3** located rearward of the support frame **20** in the outer cover **10**. The reserve tank **25** is attached to a rear portion of the support frame **20** via an attachment bracket **29**. An attachment structure of the reserve tank **25** will be described later.

The battery **26** is a storage battery that supplies electric power to electrical components including a work lamp, a display, and meters (not illustrated), and the controller **28** mounted on the working machine **1**. The battery **26** is disposed in the left space S**2** of the support frame **20**. The battery **26** is attached to an upper portion of the turning base plate **8** via a battery bracket **30**.

The isolator **27** is a device that supplies electricity generated by an alternator **31** to the battery **26**. The isolator **27** is attached to the rear portion of the support frame **20** via the attachment bracket **29**. An attachment structure of the isolator **27** will be described later.

The controller **28** is a device (electronic control unit, ECU) that controls actions of the prime mover **21**, the hydraulic pump **22**, and the like mounted on the working machine **1**. The controller **28** is disposed in the left space S**2** of the support frame **20**.

As illustrated in FIG. **5**, the alternator **31** is provided at a rear portion of the prime mover **21**. The alternator **31** is coupled to a drive shaft **21**P of the prime mover **21** via a power transmission belt **32**, and is rotationally driven with rotational power of the prime mover **21** to generate electricity to be stored in the battery **26**.

A cooling fan **33** is provided at a left side portion of the prime mover **21**. The cooling fan **33** is coupled to the drive shaft **21**P of the prime mover **21** via the power transmission belt **32**, and is rotationally driven with the rotational power of the prime mover **21** to generate cooling air F**1** for cooling the prime mover **21** inside the machine body **2**.

Thus, driven units that are driven with the power of the prime mover **21**, such as the cooling fan **33**, the alternator **31**, and the power transmission belt **32**, are provided inside

the machine body **2** in addition to the prime mover **21**. Also, as illustrated in FIGS. **3** and **4**, peripheral devices, such as the reserve tank **25** and the isolator **27**, are disposed in the space S**3** located rearward of the support frame **20** inside the machine body **2**, that is, in the periphery of the prime mover **21**.

As illustrated in FIGS. **2** and **3**, the outer cover **10** includes a first cover body **10**A disposed in the upper portion of the machine body **2** and lower than the operator's seat **6**, a second cover body **10**B disposed in an upper rear portion of the machine body **2**, a third cover body **10**C disposed in an upper left side portion of the machine body **2**, a fourth cover body **10**D disposed in an upper right side portion of the machine body **2**, a fifth cover body **10**E disposed in a lower left side portion of the machine body **2**, and the weight **10**F disposed in a lower rear portion of the machine body **2**. Further, although not illustrated, the outer cover **10** includes a sixth cover body disposed in a lower right side portion of the machine body **2** and a seventh cover body disposed in the front portion of the machine body **2**.

The hood **10**T that covers the prime mover **21** includes the first cover body **10**A, the second cover body **10**B, the third cover body **10**C, and the fourth cover body **10**D. The first cover body **10**A, the second cover body **10**B, the third cover body **10**C, and the fourth cover body **10**D are supported by the support frame **20** (see FIG. **4**).

As illustrated in FIGS. **1** and **3**, the first cover body **10**A is a cover member that covers the front and upper side of the prime mover **21**, and is fixed to left and right front pillar portions **20**A and a rear upper frame portion **20**E (see FIG. **4**) of the support frame **20** by bolts or the like.

The second cover body **10**B is a cover member that covers the rear of the prime mover **21** (an upper region of the rear space S**3** of the support frame **20**), and a right side edge portion of the second cover body **10**B is coupled to and supported by a right rear pillar portion **20**B (see FIG. **4**) of the support frame **20** by a hinge mechanism. That is, the second cover body **10**B is pivotally coupled to the right rear pillar portion **20**B of the support frame **20** so as to be swingable about a vertical axis (an axis extending in the up-down direction). The isolator **27** and the reserve tank **25** are disposed inward (forward) of the second cover body **10**B. Thus, a worker can access the reserve tank **25** and the isolator **27** disposed in the rear space S**3** of the support frame **20**, the prime mover **21**, the alternator **31**, and the power transmission belt **32** disposed in the inner space S**1** of the support frame **20**, and the like from the rear of the machine body **2** by swinging the second cover body **10**B outward (rearward) of the machine body **2** to open the second cover body **10**B.

The third cover body **10**C is a cover member that covers the left of the prime mover **21** (an upper region of the left space S**2** of the support frame **20**), and a front edge portion of the third cover body **10**C is coupled to and supported by the left front pillar portion **20**A (see FIG. **4**) of the support frame **20** by a hinge mechanism. That is, the third cover body **10**C is pivotally coupled to the left front pillar portion **20**A of the support frame **20** so as to be swingable about a vertical axis (an axis extending in the up-down direction). The radiator **23** and the oil cooler **24** are disposed inward (rightward) of the third cover body **10**C. The battery **26** is disposed inward and downward (rightward and downward) of the third cover body **10**C. Thus, the worker can access the radiator **23**, the oil cooler **24**, the battery **26**, and the like disposed in the left space S**2** of the support frame **20** from the left of the machine body **2** by swinging the third cover body **10**C outward (leftward) of the machine body **2** to open the third cover body **10**C.

The third cover body **10**C has a first outside air inlet **41**. The first outside air inlet **41** is an air intake for taking outside air into the machine body **2**. The first outside air inlet **41** is covered with a member having air permeability, such as a perforated metal, an expanded metal, or a welded wire mesh.

The fourth cover body **10**D is a cover member that covers the right of the prime mover **21**, and is fixed to a side surface cover **10**R (see FIG. **1**) that is vertically provided forward and rightward of the operator's seat **6** (rightward of the feet of the worker seated on the operator's seat **6**) in the upper portion of the machine body **2** by a bolt or the like.

As illustrated in FIG. **5**, the fourth cover body **10**D has an air outlet **42**. The air outlet **42** discharges the outside air (cooling air F**1**) taken into the machine body **2** to the outside. The air outlet **42** is covered with a member having air permeability, such as a perforated metal, an expanded metal, or a welded wire mesh, similarly to the first outside air inlet **41** of the third cover body **10**C.

As illustrated in FIGS. **1** and **3**, the fifth cover body **10**E is a cover member that covers the left of the prime mover **21** (a lower region of the left space S**2** of the support frame **20**), and is fixed to a bracket member **8**C (see FIG. **5**) vertically provided on a left side portion of the turning base plate **8** and a lower portion of the turning base plate **8** by bolts or the like. The battery **26** and the controller **28** are disposed inward (rightward) of the fifth cover body **10**E.

As illustrated in FIG. **6**, the support frame **20** is vertically provided on the turning base plate **8**. The support frame **20** includes at least one front pillar portion **20**A, at least one rear pillar portion **20**B, at least one upper side frame portion **20**C, a front upper frame portion **20**D, a rear upper frame portion **20**E, a front attachment plate **20**F, and at least one rear attachment plate **20**G.

The front pillar portion **20**A includes a pair of front pillar portions **20**A disposed forward of the prime mover **21** so as to extend in the up-down direction and to be spaced apart from each other in the left-right direction. The rear pillar portion **20**B includes a pair of rear pillar portions **20**B disposed rearward of the prime mover **21** so as to extend in the up-down direction and to be spaced apart from each other in the left-right direction.

The upper side frame portion **20**C is formed to extend rearward from each of upper portions of the left and right front pillar portions **20**A. The upper side frame portions **20**C are formed integrally with the front pillar portions **20**A. Rear portions of the left and right upper side frame portions **20**C are coupled and fixed to upper portions of the rear pillar portions **20**B disposed rearward of the rear portions of the upper side frame portions **20**C.

The front upper frame portion **20**D is provided across the upper portions of the left and right front pillar portions **20**A, and couples the upper portions to each other and couples front portions of the left and right upper side frame portions **20**C to each other. The rear upper frame portion **20**E is provided across the upper portions of the left and right rear pillar portions **20**B, and couples the upper portions to each other and couples the rear portions of the left and right upper side frame portions **20**C to each other.

The front attachment plate **20**F is provided across lower portions of the left and right front pillar portions **20**A and couples the lower portions to each other. The front attachment plate **20**F is fixed to an upper portion of a partition wall **8**A vertically provided on the turning base plate **8**, by a bolt or the like. That is, the front pillar portions **20**A are vertically

provided on the upper portion of the partition wall **8**A. The partition wall **8**A is vertically provided forward of the prime mover **21** on the turning base plate **8**, and provides partition between the inner space S**1** of the support frame **20** and a space S**4** located forward of the support frame **20**.

The rear attachment plate **20**G is fixed to each of upper portions of a pair of left and right bracket members **8**B vertically provided on the turning base plate **8**, by a bolt or the like. That is, the rear pillar portions **20**B are vertically provided on the upper portions of the pair of bracket members **8**B.

Thus, the support frame **20** is a structure body including the four pillar portions **20**A and **20**B standing on the upper portion of the turning base plate **8** and the plurality of frame portions **20**C, **20**D, and **20**E connecting the pillar portions **20**A and **20**B substantially horizontally. Note that the support frame **20** is not limited to the configuration of the present embodiment, and can be appropriately changed in accordance with the arrangement, size, and the like of each device mounted on the machine body **2**.

As illustrated in FIGS. **7** and **8**, a partition member **44** and the attachment bracket **29** are provided at the left rear pillar portion **20**B of the support frame **20**. The partition member **44** is provided so as to extend from the upper portion to a lower portion of the left rear pillar portion **20**B and to protrude leftward from the left rear pillar portion **20**B, and provides partition between the left space S**2** and the rear space S**3** of the support frame **20**.

A seal member **45** is provided at an outer side edge portion of the partition member **44**. The seal member **45** is in contact with an inner side surface of the outer cover **10** (third cover body **10**C). Accordingly, the partition member **44** and the seal member **45** prevent or reduce a flow of the outside air (cooling air F**1**) taken into the machine body **2** by the cooling fan **33** from the left space S**2** to the rear space S**3** of the support frame **20**.

The attachment bracket **29** is fixed to a rear portion of the left rear pillar portion **20**B of the support frame **20**, and supports the reserve tank **25** and the isolator **27** in the rear space S**3** of the support frame **20**. That is, the attachment bracket **29** supports the reserve tank **25** and the isolator **27** in the vicinity of the rear of the driven units such as the cooling fan **33**, the alternator **31**, and the power transmission belt **32** provided at positions near the left of the inner space S**1** of the support frame **20**.

As illustrated in FIGS. **8** to **12**, the attachment bracket **29** includes a base member **61**, a pressing member **62**, a coupling bolt (coupling member) **63**, a push nut (falling-off prevention tool) **64**, and an engagement portion **65**. The base member **61** is fixed to the left rear pillar portion **20**B of the support frame **20** by a bolt or the like, and supports the reserve tank **25** and the isolator **27** in the vicinity of the driven units (see FIG. **7**). The pressing member **62** is coupled to the base member **61** and holds the reserve tank **25** between the pressing member **62** and the base member **61**. The coupling bolt **63** is screwed into and connected to the base member **61** to detachably couple the pressing member **62** to the base member **61**. The push nut **64** is fitted onto a bolt shaft of the coupling bolt **63** in an axial direction with the pressing member **62** interposed therebetween, and prevents the coupling bolt **63** from falling off from the pressing member **62**. The engagement portion **65** is provided at a coupling portion between the base member **61** and the pressing member **62**, and detachably engages the pressing member **62** with the base member **61**.

As illustrated in FIGS. **5** and **7**, the base member **61** is disposed at a position partially or entirely overlapping the driven units such as the cooling fan **33**, the alternator **31**, and the power transmission belt **32** when viewed from the rear of the machine body **2**. Accordingly, the worker is prevented from inadvertently touching the driven units.

As illustrated in FIGS. **10** to **12**, the base member **61** includes a fixing frame portion **71**, a first coupling frame portion **72**, a lower frame portion **73**, and a holder portion **74**. The fixing frame portion **71** is formed in a plate shape long in the up-down direction, and is fixed to the rear pillar portion **20**B in a state in which a front surface portion of the fixing frame portion **71** faces a rear surface portion of the rear pillar portion **20**B.

As illustrated in FIGS. **9** to **12**, the fixing frame portion **71** has a notch portion **71**A. The notch portion **71**A is formed in a substantially semicircular arc shape that opens upward at an upper end portion of the fixing frame portion **71**. The isolator **27** is fixed to the fixing frame portion **71** by a bolt or the like in a state of being fitted into the notch portion **71**A from above. Thus, the isolator **27** is attached to an upper portion of the fixing frame portion **71**, that is, an upper portion of the attachment bracket **29** (see FIG. **8**).

The first coupling frame portion **72** is coupled to a second coupling frame portion **77** of the pressing member **62** by the coupling bolt **63**. The first coupling frame portion **72** is formed in a columnar shape long in the up-down direction, and extends along a right side edge portion of the fixing frame portion **71**. The first coupling frame portion **72** is formed in a columnar shape having at least two side surface portions. In the present embodiment, the first coupling frame portion **72** has two side surface portions of a first side surface portion **72**A and a second side surface portion **72**B. That is, the first coupling frame portion **72** is formed in an L shape when viewed from above.

The first side surface portion **72**A is formed by being bent rearward from the right side edge portion of the fixing frame portion **71**. The second side surface portion **72**B is formed by being bent rightward from a rear edge portion of the first side surface portion **72**A. That is, the second side surface portion **72**B is provided rightward and rearward of the right side edge portion of the fixing frame portion **71**. The reserve tank **25** is arranged rightward of the first coupling frame portion **72**. In other words, the first coupling frame portion **72** extends along a gap S**8** between the rear pillar portion **20**B (support frame **20**) and the reserve tank **25** (see FIGS. **9** to **11**).

As illustrated in FIGS. **9** and **12**, the first side surface portion **72**A has an engagement pin **65**A. The engagement pin **65**A is provided to protrude at a position close to an upper end of the first side surface portion **72**A, and a hook portion **65**B of the pressing member **62** is engaged with the engagement pin **65**A when the pressing member **62** is coupled to the base member **61**.

As illustrated in FIG. **12**, the second side surface portion **72**B has a bolt hole **75** and a window hole **76**. The bolt hole **75** is provided at a substantially central position in the up-down direction of the second side surface portion **72**B. The coupling bolt **63** is screwed into and connected to the bolt hole **75** from the rear. The window hole **76** is a notch formed in a substantially upper half portion of the right side edge portion of the second side surface portion **72**B, and allows the inner space S**1** of the support frame **20** and the rear space S**3** of the support frame **20** to communicate with each other. That is, the window hole **76** is an opening for allowing the driven unit such as the power transmission belt **32** in the inner space S**1** of the support frame **20** to be visually recognized from the rear of the machine body **2**. Note that the window hole **76** may be a through hole formed

through the second side surface portion **72**B as long as the driven unit such as the power transmission belt **32** can be visually recognized from the rear of the machine body **2**.

As illustrated in FIGS. **10** to **12**, the lower frame portion **73** is formed in a plate shape long in the left-right direction, and extends rightward from a lower end portion of the first coupling frame portion **72** in a posture in which flat surface portions of the lower frame portion **73** face upward and downward. The holder portion **74** is vertically provided at a position near a right end of an upper surface portion of the lower frame portion **73**. Note that the reserve tank **25** is formed in a bottomed cylindrical shape having a fluid supply port portion **25**F in an upper surface portion **25**A, and is supported by the lower frame portion **73** from below. In other words, the lower frame portion **73** is disposed so as to face a bottom surface portion **25**B of the reserve tank **25**, and supports the reserve tank **25** from below.

A neck portion **25**G is provided between the upper surface portion **25**A and the fluid supply port portion **25**F of the reserve tank **25**. The neck portion **25**G is formed in a substantially cylindrical shape protruding upward from the upper surface portion **25**A of the reserve tank **25**, and the fluid supply port portion **25**F is provided at an upper end portion of the neck portion **25**G. The fluid supply port portion **25**F is formed in a substantially disk shape having a larger diameter than the diameter of the neck portion **25**G.

The holder portion **74** includes a holder pillar **74**A, an insertion piece **74**B, and a rib **74**C. The holder pillar **74**A is formed in a columnar shape long in the up-down direction, and extends upward from the upper surface portion of the lower frame portion **73**. The insertion piece **74**B is formed in a substantially trapezoidal plate shape, and is coupled to an upper end portion of the holder pillar **74**A in a posture in which flat surface portions of the insertion piece **74**B face in the front-rear direction. The rib **74**C is a plate-shaped member extending upward from the upper surface portion of the lower frame portion **73**, and a side edge portion of the rib **74**C is connected to a plate surface of the holder pillar **74**A to reinforce the holder pillar **74**A.

As illustrated in FIG. **11**, the holder portion **74** is fitted into an insertion groove **25**S provided in a front surface portion **25**C of the reserve tank **25**. The reserve tank **25** is supported by the upper surface portion of the lower frame portion **73** by the insertion piece **74**B of the holder portion **74** being fitted into the insertion groove **25**S of the front surface portion **25**C. Thus, the reserve tank **25** is attached to a right portion of the attachment bracket **29** (rightward of the left rear pillar portion **20**B), and is disposed at a position overlapping the alternator **31** when viewed from the rear of the machine body **2** (see FIGS. **5** and **7**). Accordingly, the worker is prevented from inadvertently touching the alternator **31** or another driven unit (cooling fan **33**, power transmission belt **32**, or the like).

As illustrated in FIGS. **5** and **7**, the pressing member **62** is disposed at a position overlapping the driven units such as the cooling fan **33**, the alternator **31**, and the power transmission belt **32** when viewed from the rear of the machine body **2**. Accordingly, the worker is prevented from inadvertently touching the driven units. Thus, the attachment bracket **29** has both a function of supporting the reserve tank **25** inside the machine body **2** and a function of preventing the worker from inadvertently touching the driven unit such as the power transmission belt **32**.

As illustrated in FIGS. **9** to **12**, the pressing member **62** includes the second coupling frame portion **77** and an upper frame portion **78**. The second coupling frame portion **77** is coupled to the first coupling frame portion **72** of the base member **61** by the coupling bolt **63**.

The second coupling frame portion **77** is formed in a columnar shape long in the up-down direction and is provided to overlap the first coupling frame portion **72**. That is, the second coupling frame portion **77** is formed in a columnar shape extending along the first coupling frame portion **72**. The second coupling frame portion **77** is formed in a columnar shape having at least two side surface portions. In the present embodiment, the second coupling frame portion **77** has two side surface portions of a third side surface portion **77**A and a fourth side surface portion **77**B. That is, the second coupling frame portion **77** is formed in an L shape when viewed from above.

The third side surface portion **77**A is disposed rightward of the first coupling frame portion **72** and substantially parallel to the first side surface portion **72**A in a state in which the pressing member **62** is coupled to the base member **61**. The fourth side surface portion **77**B is formed by being bent leftward from a rear edge portion of the third side surface portion **77**A. The fourth side surface portion **77**B is disposed to overlap a rear surface portion of the first coupling frame portion **72** (second side surface portion **72**B) from the rear in the state in which the pressing member **62** is coupled to the base member **61**.

The fourth side surface portion **77**B has a bolt insertion hole **79**. The bolt insertion hole **79** is formed through the fourth side surface portion **77**B at a position near a lower end thereof. The coupling bolt **63** is screwed into the bolt hole **75** provided in the first coupling frame portion **72** of the base member **61** through the bolt insertion hole **79**. Accordingly, the first coupling frame portion **72** of the base member **61** and the second coupling frame portion **77** of the pressing member **62** are fixed to each other in a state of overlapping each other in the front-rear direction. Thus, the first coupling frame portion **72** and the second coupling frame portion **77** are coupled by the coupling bolt **63** to define a substantially quadrangular columnar frame body defined by a left side surface portion (first side surface portion **72**A), a rear surface portion (second side surface portion **72**B, fourth side surface portion **77**B), and a right side surface portion (third side surface portion **77**A) located rightward of the fixing frame portion **71**.

Also, at this time, the fourth side surface portion **77**B of the second coupling frame portion **77** covers the window hole **76** provided in the first coupling frame portion **72** from the rear of the support frame **20**. That is, the pressing member **62** includes the fourth side surface portion **77**B that serves as a cover portion capable of covering the window hole **76** provided in the first coupling frame portion **72**. Thus, when the pressing member **62** is detached from the base member **61**, the driven unit such as the power transmission belt **32** can be visually recognized from the window hole **76**.

Note that the coupling bolt **63** of the present embodiment is a hexagonal-head bolt. Thus, when the pressing member **62** is detached from the base member **61**, it is necessary to remove the coupling bolt **63** using a tool such as a wrench. Accordingly, even if an excessive force is applied to the pressing member **62** from the outside, the pressing member **62** is not easily detached from the base member **61**. Also, the coupling bolt **63** is held in a state of being attached to the pressing member **62** by the push nut **64**. Thus, when the pressing member **62** is detached from the base member **61**, there is no possibility that the coupling bolt **63** falls off into or out of the machine body **2**. Note that the coupling bolt **63** may be held by the pressing member **62** or the base member

61 in a falling-off prevention state by using another falling-off prevention tool (various types of falling-off prevention washers, falling-off prevention screws, and the like) instead of the push nut 64 as long as the pressing member 62 can be prevented from falling off into or out of the machine body 2 when the pressing member 62 is detached from the base member 61.

As illustrated in FIGS. 10 to 12, the upper frame portion 78 is formed in a plate shape long in the left-right direction, and extends rightward from an upper end portion of the second coupling frame portion 77 in a posture in which flat surface portions of the upper frame portion 78 face upward and downward. The upper frame portion 78 is disposed so as to face the upper surface portion 25A of the reserve tank 25, and holds the reserve tank 25 from above. Thus, the reserve tank 25 is held by being sandwiched between the lower frame portion 73 and the upper frame portion 78 in the up-down direction. Thus, the reserve tank 25 is supported by the attachment bracket 29 in a state in which at least a rear surface portion 25D is not covered. Accordingly, the worker can clearly visually recognize the amount of the coolant stored in the reserve tank 25 from the rear of the machine body 2.

As illustrated in FIGS. 9 and 12, the upper frame portion 78 has the hook portion 65B and a notch portion 78A. The hook portion 65B is provided in a bent piece 78B that is bent downward from a left end edge portion of the upper frame portion 78. The hook portion 65B is formed in a substantially U shape that is open forward at the left end edge portion of the upper frame portion 78, and is engaged with the engagement pin 65A of the base member 61 from the rear when the pressing member 62 is coupled to the base member 61. Accordingly, the pressing member 62 is prevented from moving in the up-down direction. The engagement portion 65 includes the engagement pin 65A and the hook portion 65B.

The notch portion 78A is formed in a substantially quarter arc shape that is open rightward and rearward at a right side end portion of the upper frame portion 78, and is fitted onto the neck portion 25G of the reserve tank 25 in the state in which the pressing member 62 is coupled to the base member 61. That is, the upper frame portion 78 is disposed to face the periphery of the neck portion 25G at the upper surface portion 25A of the reserve tank 25, and holds the reserve tank 25 from above.

With the above-described configuration, the attachment bracket 29 has rigidity that does not plastically deform even when the reserve tank 25 is pushed in each direction, such as from above, rear, left, or right, with a predetermined force or less (for example, 250 N or less), and has a holding force with which the reserve tank 25 does not fall off from the base member 61.

Note that, in the above-described embodiment, the attachment bracket 29 is provided at the rear portion of the support frame 20. However, the attachment bracket 29 may be provided at a side portion of the support frame 20 as long as the attachment bracket 29 can support the peripheral device such as the reserve tank 25 in the vicinity of the driven unit such as the power transmission belt 32.

Also, in the above-described embodiment, the attachment bracket 29 is configured to support the reserve tank 25 and the isolator 27. However, the attachment bracket 29 may be configured to support only one of the reserve tank 25 and the isolator 27, or may support a peripheral device such as a fuel pump, a fuel filter, a fuse box, or a battery disposed in the periphery of the prime mover 21.

Also, in the above-described embodiment, the driven units such as the cooling fan 33, the alternator 31, and the power transmission belt 32 are provided at positions near the left of the inner space S1 of the support frame 20. However, the driven units may be provided at positions near the right of the inner space S1 of the support frame 20 or may be provided at positions near the rear at the center in the left-right direction of the inner space S1 of the support frame 20.

The present invention provides a working machine 1 described in the following items.

(Item 1) A working machine 1 comprising: a machine body 2; a prime mover 21 mounted on the machine body 2; a peripheral device disposed in a periphery of the prime mover 21; and an attachment bracket 29 to support the peripheral device, wherein the attachment bracket 29 includes a base member 61 to support the peripheral device in a vicinity of a driven unit to be driven with power of the prime mover 21, and a pressing member 62 coupled to the base member 61, to hold the peripheral device between the pressing member 62 and the base member 61.

With the working machine 1 according to Item 1, the peripheral device can be firmly supported by the base member 61 and the pressing member 62 of the attachment bracket 29. Also, the peripheral device is firmly supported in the vicinity of the driven unit, and hence the worker can be reliably prevented from inadvertently touching the driven unit during inspection.

(Item 2) The working machine 1 according to Item 1, wherein the base member 61 includes a first coupling frame portion 72 defining a coupling portion to the pressing member 62, and the first coupling frame portion 72 is formed in a columnar shape extending in an up-down direction of the machine body 2.

With the working machine 1 according to Item 2, the force applied to the peripheral device in the up-down direction can be received by the first coupling frame portion 72 extending in the up-down direction of the machine body 2, and hence the support strength for the peripheral device is further improved.

(Item 3) The working machine 1 according to Item 2, comprising: a cover body 10 defining an outer shell of the machine body 2; and a support frame 20 vertically provided inside the machine body 2, to support the cover body 10, wherein the first coupling frame portion 72 extends along a gap between the support frame 20 and the peripheral device.

With the working machine 1 according to Item 3, the first coupling frame portion 72 serves as a barrier wall of the gap S8 between the support frame 20 and the peripheral device, and hence the worker can be more reliably prevented from inadvertently touching the driven unit during inspection.

(Item 4) The working machine 1 according to Item 2, wherein the pressing member 62 includes a second coupling frame portion 77 coupled to the first coupling frame portion 72, and the second coupling frame portion 77 is formed in a columnar shape extending along the first coupling frame portion 72.

With the working machine 1 according to Item 4, the force applied to the peripheral device in the up-down direction can be received by the first coupling frame portion 72 and the second coupling frame portion 77 extending in the up-down direction of the machine body 2, and hence the support strength for the peripheral device is further improved.

(Item 5) The working machine 1 according to any one of Items 1 to 4, wherein the pressing member 62 includes a second coupling frame portion 77 defining a coupling portion to the base member 61, and the second coupling frame

portion **77** is formed in a columnar shape extending in an up-down direction of the machine body **2**.

With the working machine **1** according to Item 5, the force applied to the peripheral device in the up-down direction can be received by the second coupling frame portion **77** extending in the up-down direction of the machine body **2**, and hence the support strength for the peripheral device is further improved.

(Item 6) The working machine **1** according to any one of Items 1 to 5, wherein the base member **61** includes a lower frame portion **73** to support the peripheral device from below, and the pressing member **62** has an upper frame portion **78** to hold the peripheral device from above.

With the working machine **1** according to Item 6, the peripheral device can be held in the up-down direction by the lower frame portion **73** of the base member **61** and the upper frame portion **78** of the pressing member **62**, and hence the support strength for the peripheral device is further improved.

(Item 7) The working machine **1** according to any one of Items 1 to 6, wherein the base member **61** includes a first coupling frame portion **72** defined by a plate-shaped member that is formed in an L shape when viewed from above and that has a first side surface portion **72**A and a second side surface portion **72**B, and having a columnar shape long in an up-down direction, and a lower frame portion **73** laterally extending from a lower portion of the first coupling frame portion **72** such that plate surfaces of the lower frame portion **73** face in the up-down direction, the pressing member **62** includes a second coupling frame portion **77** defined by a plate-shaped member that is formed in an L shape when viewed from above and that has a third side surface portion **77**A) and a fourth side surface portion **77**B, and having a columnar shape long in the up-down direction, and an upper frame portion **78** laterally extending from an upper portion of the second coupling frame portion **77** such that plate surfaces of the upper frame portion **78** face in the up-down direction, and the peripheral device is held in a state of being sandwiched between the lower frame portion **73** and the upper frame portion (**78**) from above and below.

With the working machine **1** according to Item 7, the force applied to the peripheral device in the up-down direction can be received by the first coupling frame portion **72** provided at the base member **61**, having the L shape when viewed from above, and being long in the up-down direction; the lower frame portion **73** extending from the lower portion of the first coupling frame portion **72**; the second coupling frame portion **77** provided at the pressing member **62**, having the L shape when viewed from above, and being long in the up-down direction; and the upper frame portion **78** extending from the upper portion of the second coupling frame portion **77**. Hence the support strength for the peripheral device is further improved.

(Item 8) The working machine **1** according to Item 8, wherein the base member **61** further includes a holder portion **74** extending upward from the lower frame portion **73**, and the peripheral device is held in a state in which the peripheral device is sandwiched between the lower frame portion **73** and the upper frame portion **78** from above and below and a surface of the peripheral device near the driven unit is supported by the holder portion **74**.

With the working machine **1** according to Item 8, the peripheral device can be held in the up-down direction by the lower frame portion **73** of the base member **61** and the upper frame portion **78** of the pressing member **62**, and the surface of the peripheral device near the driven unit can be supported by the holder portion **74** of the lower frame portion **73**. Hence the support strength for the peripheral device is further improved.

(Item 9) The working machine **1** according to Item 8, wherein the holder portion **74** includes a holder pillar **74**A extending upward from the lower frame portion **73** and an insertion piece **74**B coupled to the holder pillar **74**A, the peripheral device includes an insertion groove **25**S in the surface near the driven unit, and the surface of the peripheral device near the driven unit is supported by the holder portion **74** by the insertion piece **74**B being fitted into the insertion groove **25**S.

With the working machine **1** according to Item 9, the insertion piece **74**B provided at the holder pillar **74**A of the lower frame portion **73** can be fitted into and hold the insertion groove **25**S of the peripheral device. Hence the support strength for the peripheral device is further improved.

(Item 10) The working machine **1** according to Item 8, wherein the upper frame portion **78** has a notch portion **78**A formed in a substantially arc shape, the peripheral device has a neck portion **25**G protruding upward, and the neck portion **25**G is fitted into the notch portion **78**A.

With the working machine **1** according to Item 10, the neck portion **25**G of the peripheral device can be fitted into and held by the notch portion **78**A of the upper frame portion **78**. Hence the support strength for the peripheral device is further improved.

(Item 11) The working machine **1** according to any one of Items 1 to 10, wherein the base member **61** and the pressing member **62** are disposed at positions partially or entirely overlapping the driven unit as viewed from rear of the machine body **2**.

With the working machine **1** according to Item 11, the worker can be reliably prevented from inadvertently touching the driven unit when the worker is performing inspection work at the rear of the machine body **2**.

(Item 12) The working machine **1** according to Item 11, wherein the base member **61** has a window hole **76** through which the driven unit is visually recognizable from the rear of the machine body **2**.

With the working machine **1** according to Item 12, even though the peripheral device is not detached from the attachment bracket **29**, the periphery of the driven unit can be visually observed through the window hole **76** from the rear of the machine body **2**. Hence workability during inspection is improved.

(Item 13) The working machine **1** according to Item 12, wherein the attachment bracket **29** includes a coupling member **63** to detachably couple the pressing member **62** to the base member **61**.

With the working machine **1** according to Item 13, even though the peripheral device is not detached from the attachment bracket **29**, the periphery of the driven unit can be visually observed through the window hole **76** from the rear of the machine body **2** by detachment of the pressing member **62** from the base member **61**. Hence workability during inspection is improved.

(Item 14) The working machine **1** according to Item 13, wherein the attachment bracket **29** has an engagement portion **65** to detachably engage the pressing member **62** with the base member **61**.

With the working machine **1** according to Item 14, the pressing member **62** is coupled to the base member **61** at a plurality of positions, that is, the coupling member **63** and the engagement portion **65**. Hence the peripheral device can be more firmly supported by the attachment bracket **29**.

Accordingly, the worker can be more reliably prevented from inadvertently touching the driven unit during inspection.

(Item 15) The working machine **1** according to Item 6, wherein the peripheral device is a reserve tank **25** formed in a bottomed cylindrical shape having a fluid supply port portion **25**F in an upper surface portion **25**A, to store a coolant for the prime mover **21**, the lower frame portion **73** extends along a bottom surface portion **25**B of the reserve tank **25**, and the upper frame portion **78** extends along the upper surface portion **25**A of the reserve tank **25**.

The reserve tank **25** is relatively large in view of the role of storing the coolant for the prime mover **21**, and the worker is likely to lean against or strongly touch the reserve tank **25** during inspection. However, with the working machine **1** according to aforementioned Item 14, the reserve tank (peripheral device) **25** is held by the lower frame portion **73** of the base member **61** and the upper frame portion **78** of the pressing member **62** in the up-down direction, and hence the support strength for the reserve tank (peripheral device) **25** is further improved.

While example embodiments of the present invention have been described above, it is to be understood that variations and modifications will be apparent to those skilled in the art without departing from the scope and spirit of the present invention. The scope of the present invention, therefore, is to be determined solely by the following claims.

Also, in the above-described embodiment, the example has been described in which the present invention is applied to the working machine such as a backhoe. However, an application target of the present invention is not limited to the working machine such as a backhoe, and may be applied to a construction machine such as a wheel loader, a compact track loader, or a skid-steer loader, or may be applied to an agricultural machine such as a tractor, a combine, a rice transplanter, or a lawn mower.

What is claimed is:

1. A working machine comprising:

a machine body;

a prime mover mounted on the machine body;

a peripheral device disposed in a periphery of the prime mover; and

an attachment bracket to support the peripheral device, wherein

the attachment bracket includes a base member to support the peripheral device in a vicinity of a driven unit to be driven with power of the prime mover, and a pressing member coupled to the base member, to hold the peripheral device between the pressing member and the base member,

the base member includes a first coupling frame portion defining a coupling portion to the pressing member,

the pressing member includes a second coupling frame portion coupled to the first coupling frame portion,

the first coupling frame portion is formed in a columnar shape extending in an up-down direction of the machine body, and

the second coupling frame portion is formed in a columnar shape long in the up-down direction of the machine body and is provided to overlap the first coupling frame portion.

2. The working machine according to claim **1**, comprising:

a cover body defining an outer shell of the machine body; and

a support frame vertically provided inside the machine body, to support the cover body, wherein

the first coupling frame portion extends along a gap between the support frame and the peripheral device.

3. The working machine according to claim **1**, wherein

the base member includes a lower frame portion to support the peripheral device from below, and

the pressing member has an upper frame portion to hold the peripheral device from above.

4. The working machine according to claim **1**, wherein the base member and the pressing member are disposed at positions partially or entirely overlapping the driven unit as viewed from rear of the machine body.

5. A working machine comprising:

a machine body;

a prime mover mounted on the machine body;

a peripheral device disposed in a periphery of the prime mover; and

an attachment bracket to support the peripheral device, wherein

the attachment bracket includes a base member to support the peripheral device in a vicinity of a driven unit to be driven with power of the prime mover, and a pressing member coupled to the base member, to hold the peripheral device between the pressing member and the base member,

the base member includes

a first coupling frame portion defined by a plate-shaped member that is formed in an L shape when viewed from above and that has a first side surface portion and a second side surface portion, and having a columnar shape long in an up-down direction, and

a lower frame portion laterally extending from a lower portion of the first coupling frame portion such that plate surfaces of the lower frame portion face in the up-down direction,

the pressing member includes

a second coupling frame portion defined by a plate-shaped member that is formed in an L shape when viewed from above and that has a third side surface portion and a fourth side surface portion, and having a columnar shape long in the up-down direction, and

an upper frame portion laterally extending from an upper portion of the second coupling frame portion such that plate surfaces of the upper frame portion face in the up-down direction, and

the peripheral device is held in a state of being sandwiched between the lower frame portion and the upper frame portion from above and below.

6. The working machine according to claim **5**, wherein

the base member further includes a holder portion extending upward from the lower frame portion, and

the peripheral device is held in a state in which the peripheral device is sandwiched between the lower frame portion and the upper frame portion from above and below and a surface of the peripheral device near the driven unit is supported by the holder portion.

7. The working machine according to claim **6**, wherein

the holder portion includes a holder pillar extending upward from the lower frame portion and an insertion piece coupled to the holder pillar,

the peripheral device includes an insertion groove in the surface near the driven unit, and

the surface of the peripheral device near the driven unit is supported by the holder portion by the insertion piece being fitted into the insertion groove.

8. The working machine according to claim **6**, wherein

the upper frame portion has a notch portion formed in a substantially arc shape,

the peripheral device has a neck portion protruding upward, and

the neck portion is fitted into the notch portion.

9. A working machine comprising:

a machine body;

a prime mover mounted on the machine body;

a peripheral device disposed in a periphery of the prime mover; and

an attachment bracket to support the peripheral device, wherein

the attachment bracket includes a base member to support the peripheral device in a vicinity of a driven unit to be driven with power of the prime mover, and a pressing member coupled to the base member, to hold the peripheral device between the pressing member and the base member,

the base member and the pressing member are disposed at positions partially or entirely overlapping the driven unit as viewed from rear of the machine body, and

the base member has a window hole through which the driven unit is visually recognizable from the rear of the machine body.

10. The working machine according to claim **9**, wherein the attachment bracket includes a coupling member to detachably couple the pressing member to the base member.

11. The working machine according to claim **10**, wherein the attachment bracket has an engagement portion to detachably engage the pressing member with the base member.

* * * * *