US 20250277630A1

(19) United States
(12) Patent Application Publication
Wang et al.
(10) Pub. No.: US 2025/0277630 A1
(43) Pub. Date: Sep. 4, 2025

(54) **HEAT DISSIPATION DEVICE HAVING IRREGULAR SHAPE**

(71) Applicant: **COOLER MASTER CO., LTD.**, Taipei City (TW)

(72) Inventors: **Xuemei Wang**, Taipei City (TW); **Xiong Zhang**, Taipei City (TW); **Jen-Chih Cheng**, Taipei City (TW)

(73) Assignee: **COOLER MASTER CO., LTD.**, Taipei City (TW)

(21) Appl. No.: **19/212,028**

(22) Filed: **May 19, 2025**

Related U.S. Application Data

(60) Division of application No. 17/665,440, filed on Feb. 4, 2022, now Pat. No. 12,331,997, which is a continuation-in-part of application No. 16/711,233, filed on Dec. 11, 2019, now Pat. No. 11,913,725.

(60) Provisional application No. 62/798,480, filed on Jan. 30, 2019, provisional application No. 62/783,717, filed on Dec. 21, 2018.

(30) **Foreign Application Priority Data**

Feb. 8, 2021 (CN) 202120353801.1

Publication Classification

(51) **Int. Cl.**
F28D 15/02 (2006.01)
F28D 15/04 (2006.01)
H05K 7/20 (2006.01)

(52) **U.S. Cl.**
CPC ***F28D 15/0233*** (2013.01); ***F28D 15/046*** (2013.01); ***H05K 7/20336*** (2013.01)

(57) **ABSTRACT**

A heat dissipation device includes a first casing and a second casing coupled to the first casing. The second casing includes a body having an inner surface and an outer surface opposite the inner surface, and a first portion and a second portion, each of the first and second portions having a different cross-sectional area. The heat dissipation device further includes a plurality of columns on the inner surface, and a first wick structure disposed on the inner surface and in the first portion and the second portion.

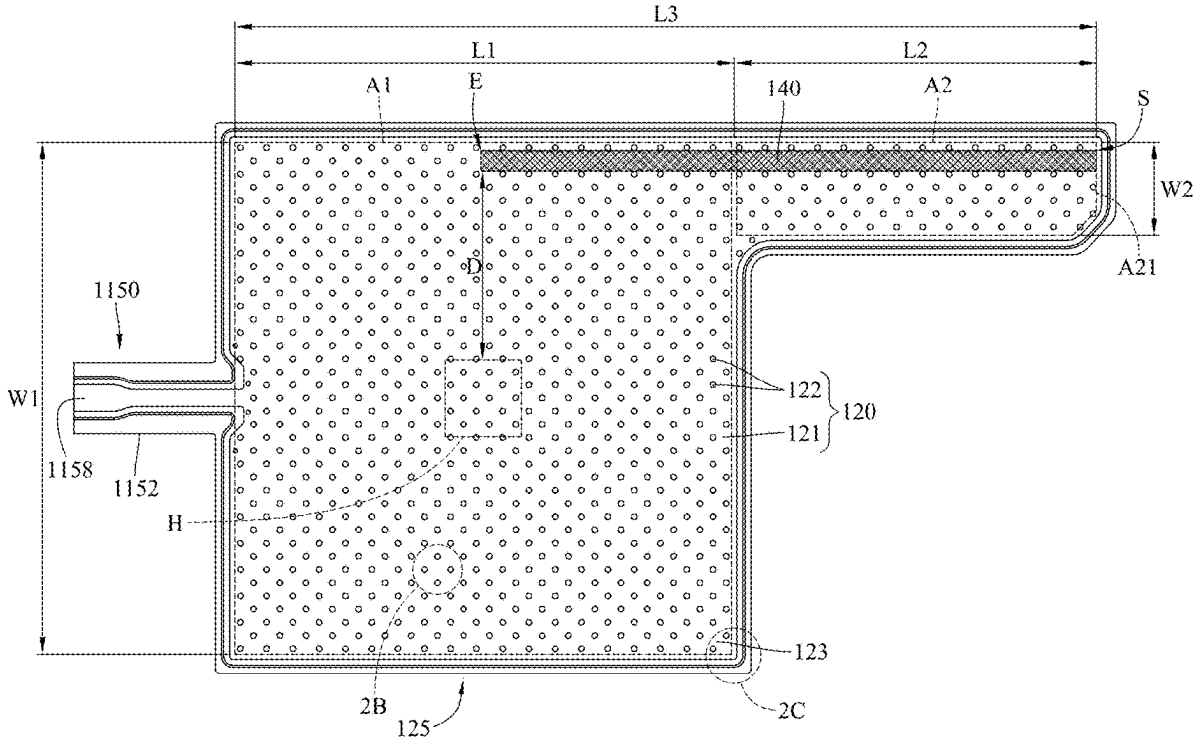

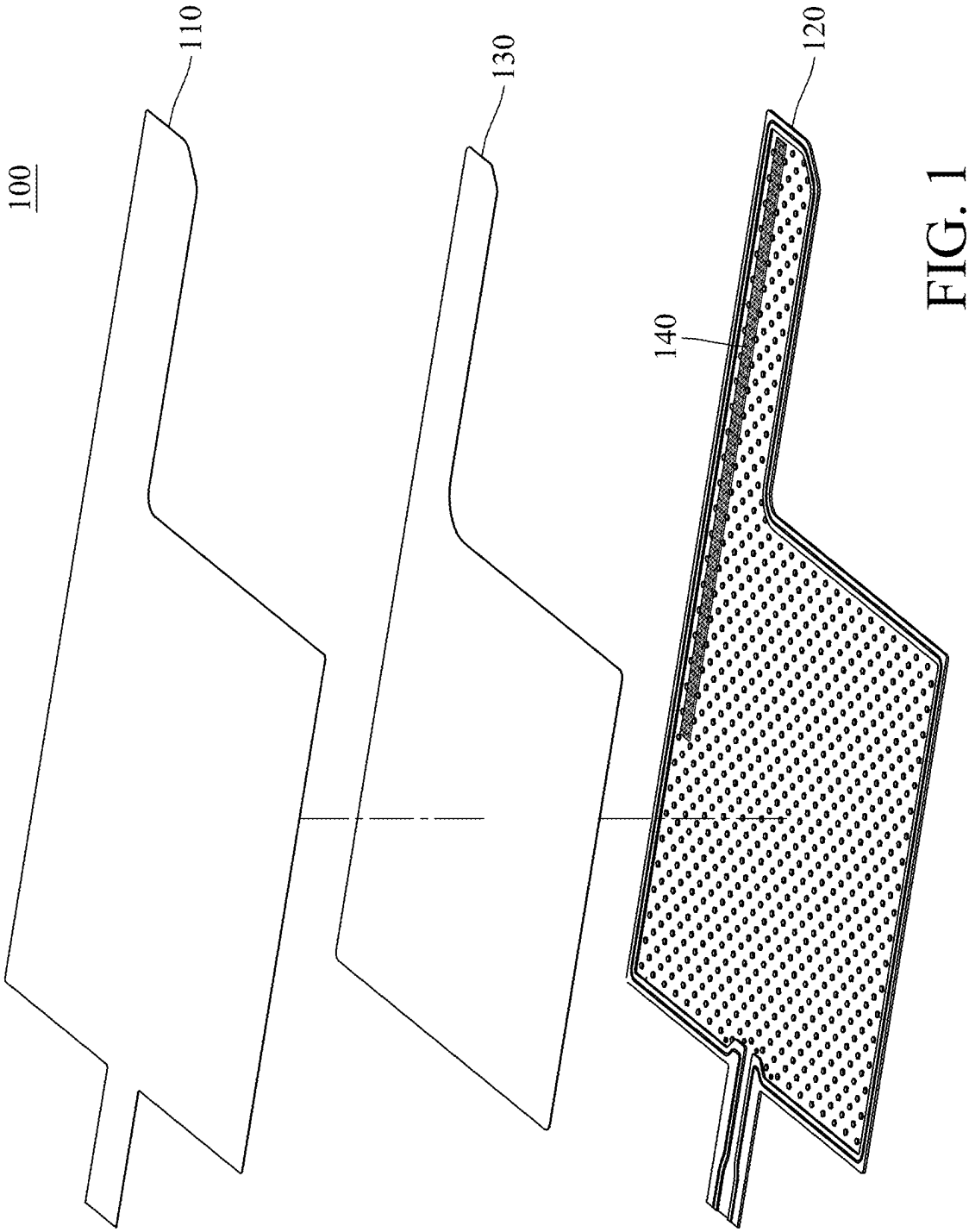

FIG. 1

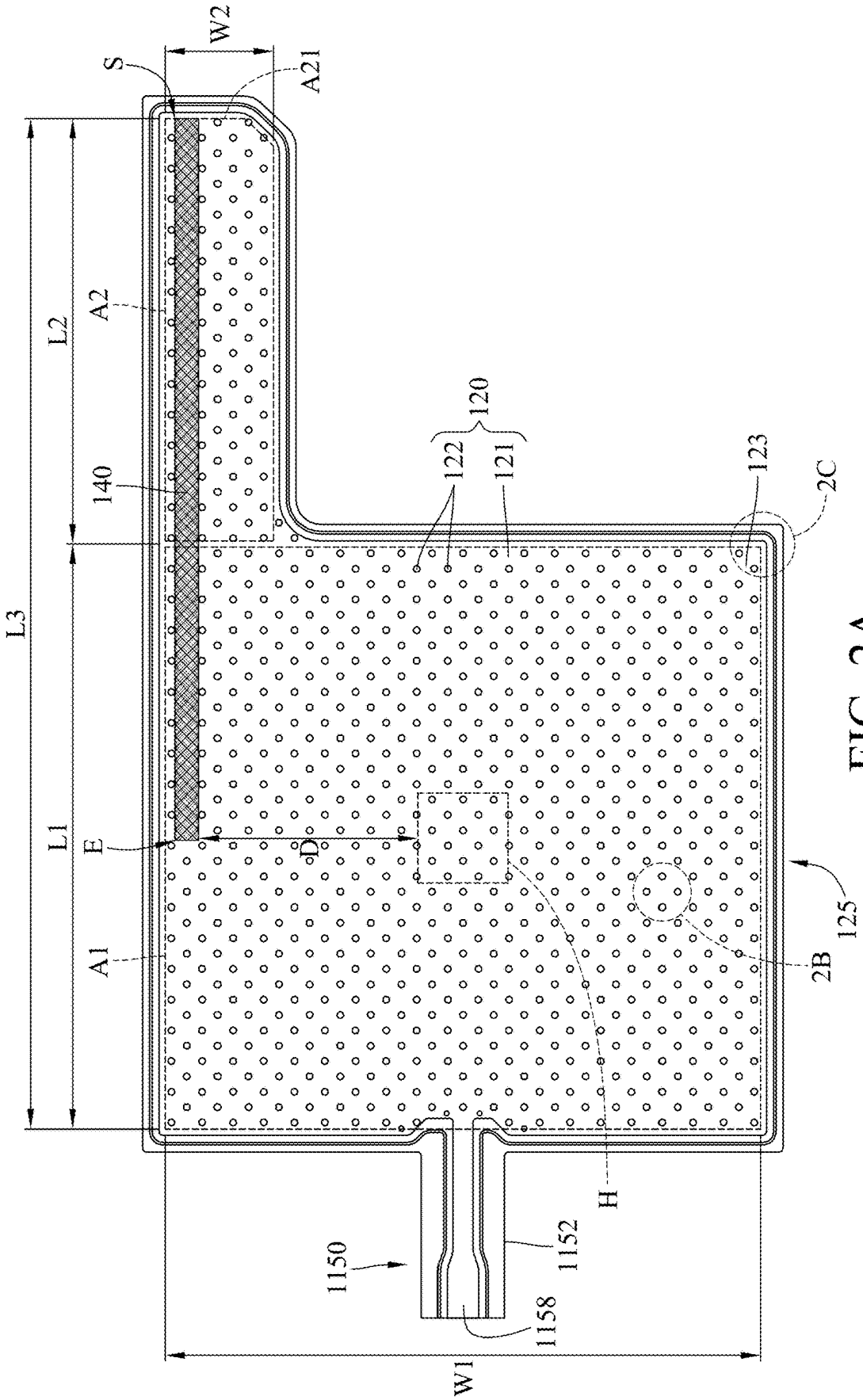
W2
S
A21
L2
A2
140
L3
L1
E
A1
D
120
122
121
123
2C
125
2B
H
1150
1152
1158
W1

FIG. 2A

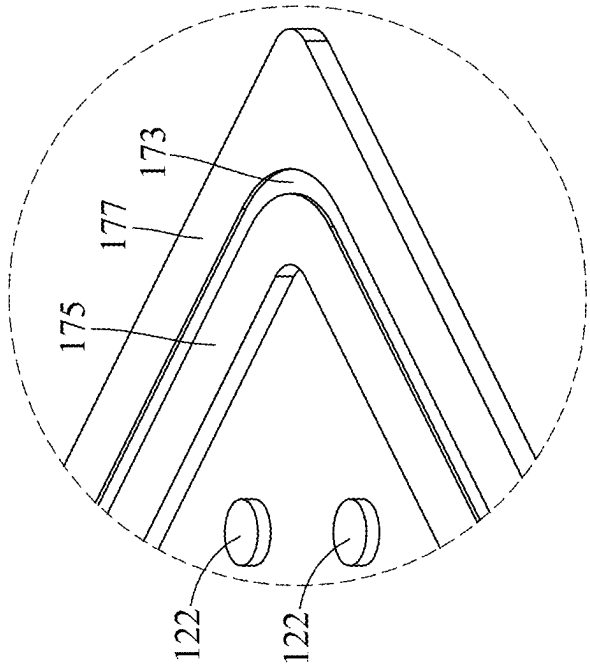

FIG. 2C

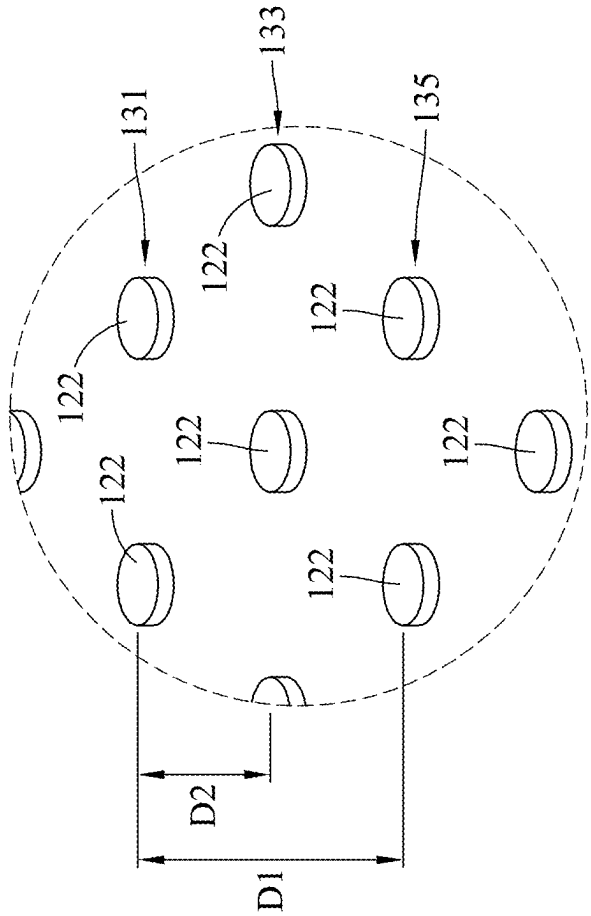

FIG. 2B

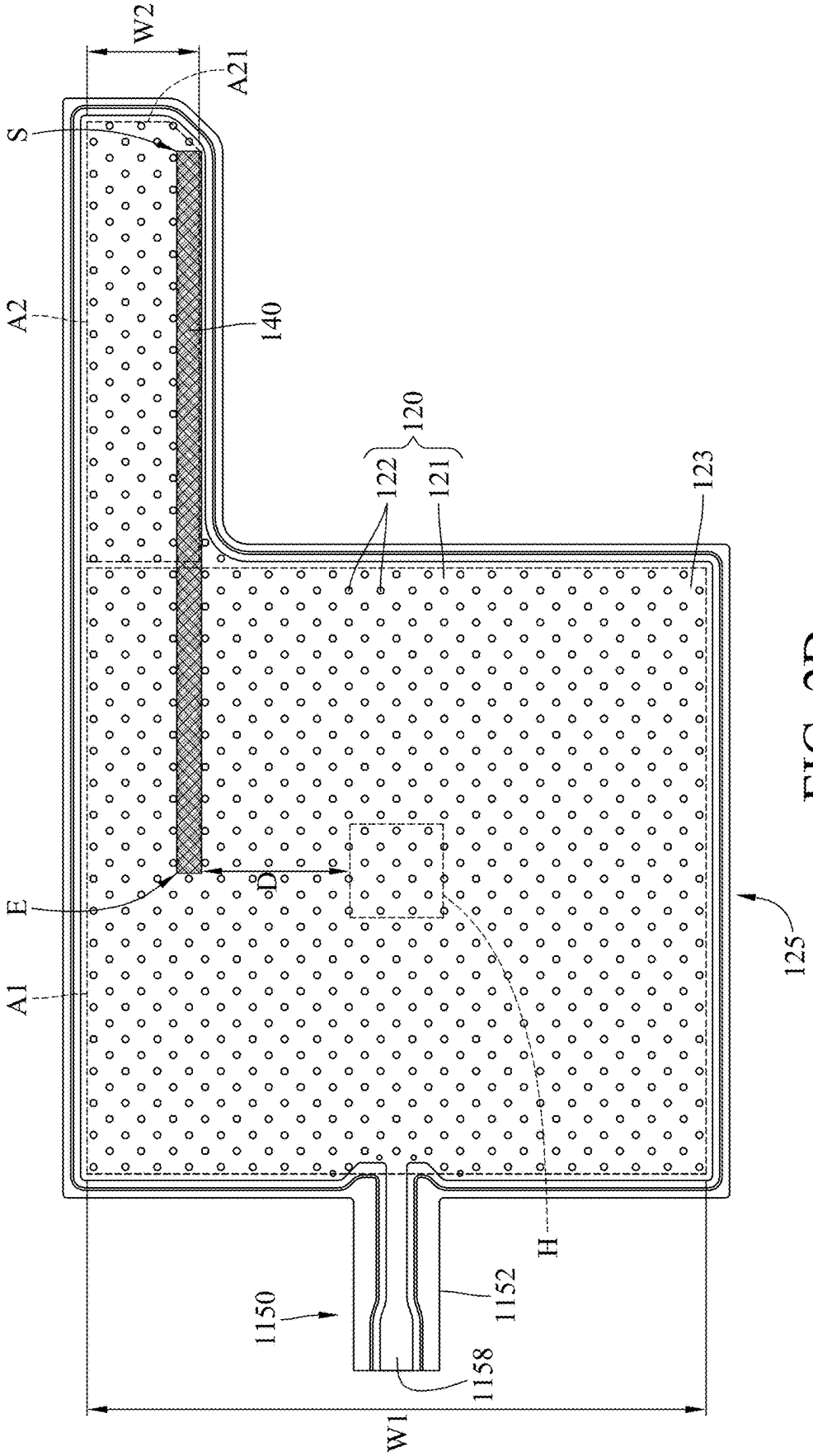

FIG. 2D

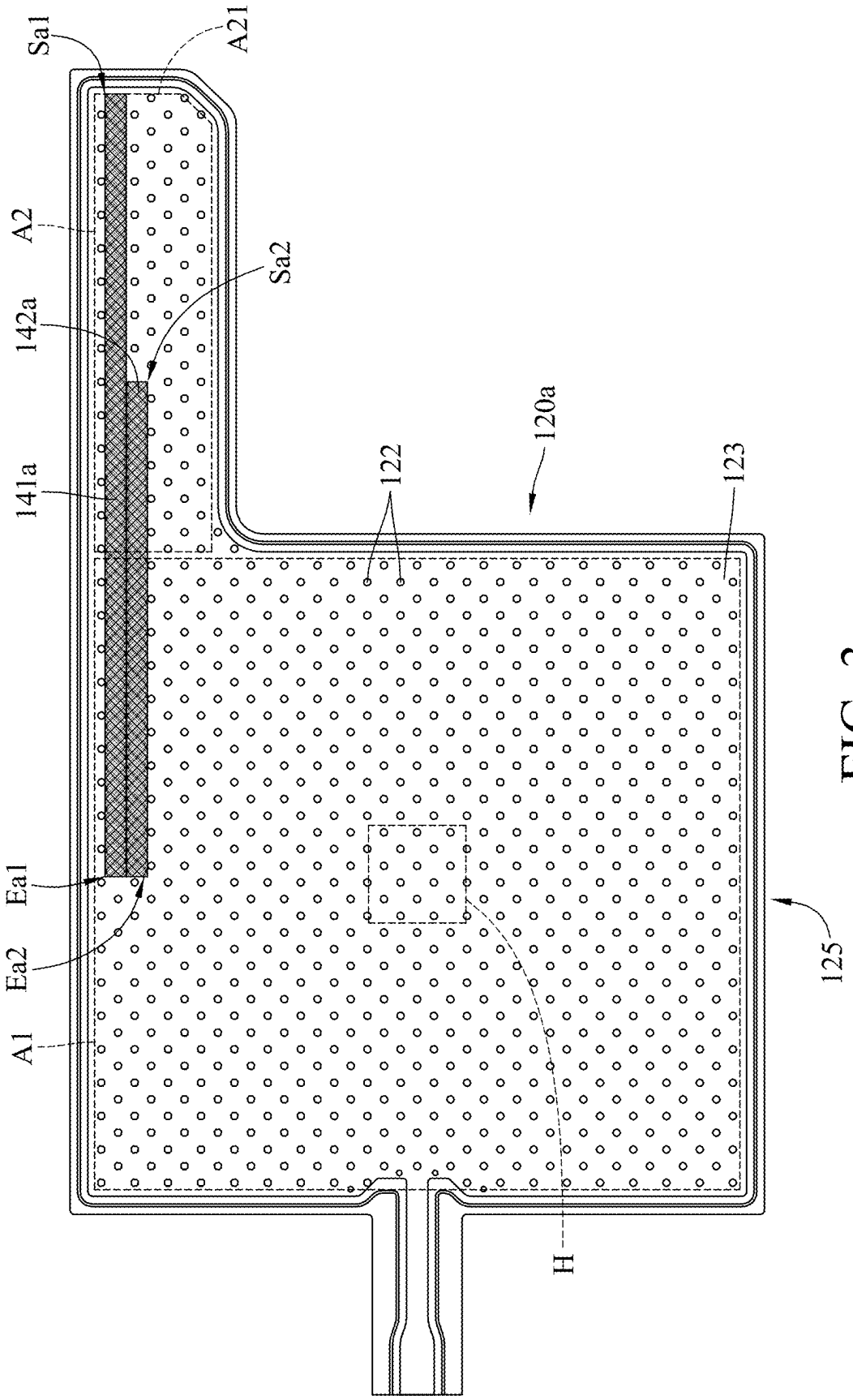

FIG. 3

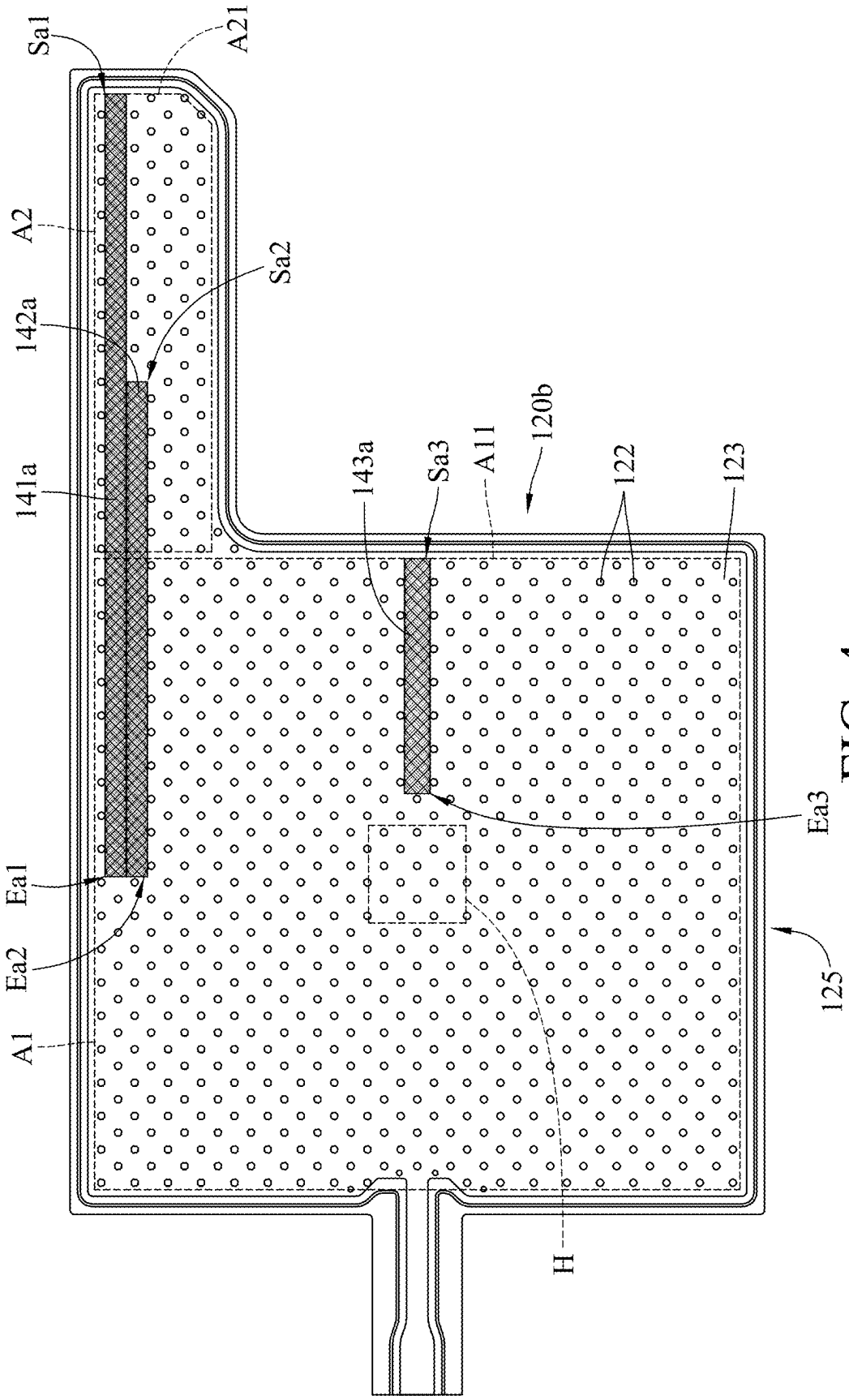
Sa1
A21
A2
Sa2
142a
141a
Ea1
Ea2
A1
143a
Sa3
A11
120b
122
123
Ea3
125
H

FIG. 4

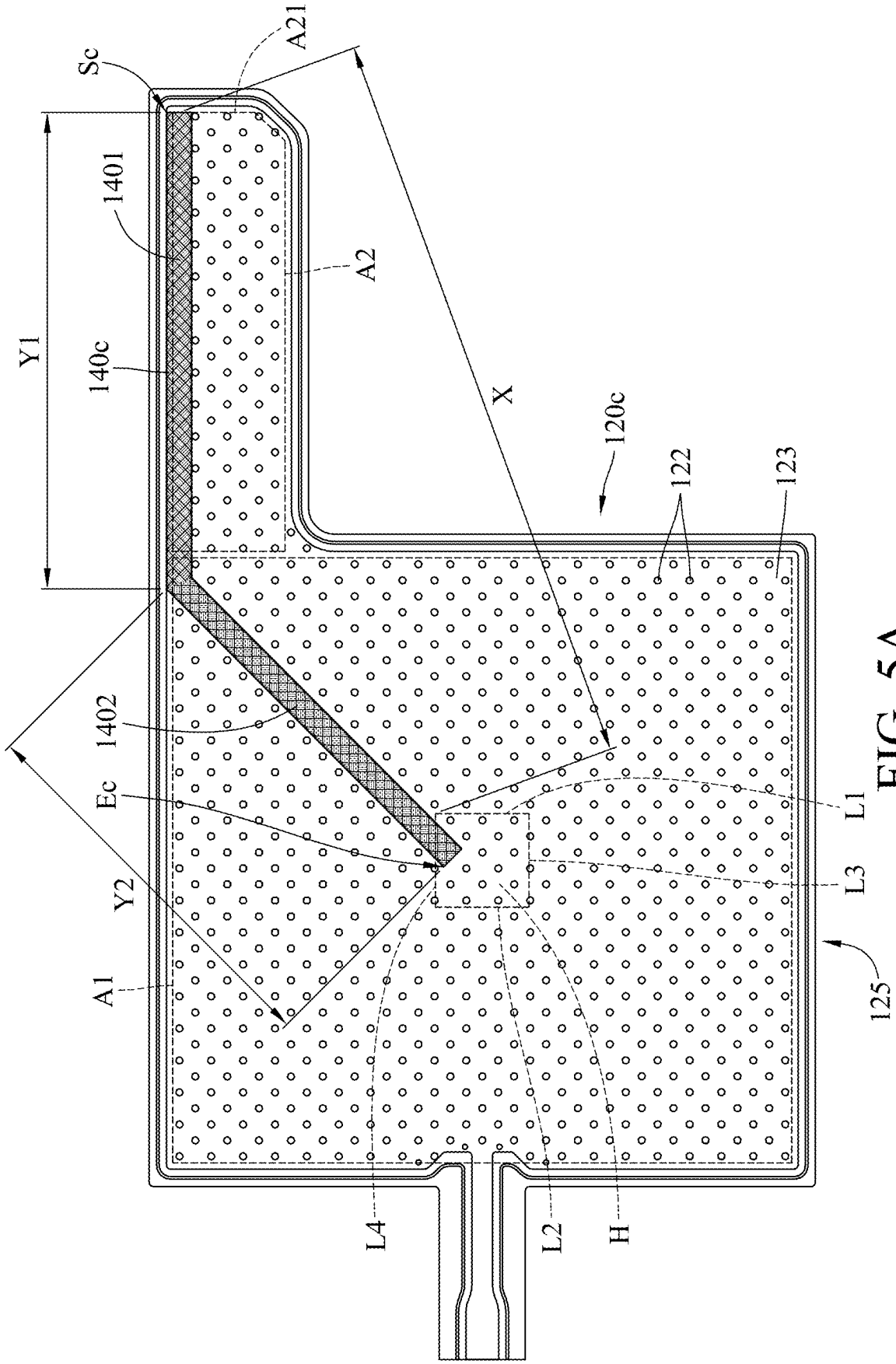
Sc
A21
1401
A2
Y1
140c
X
120c
122
123
1402
Ec
Y2
A1
L1
L3
125
L4
L2
H

FIG. 5A

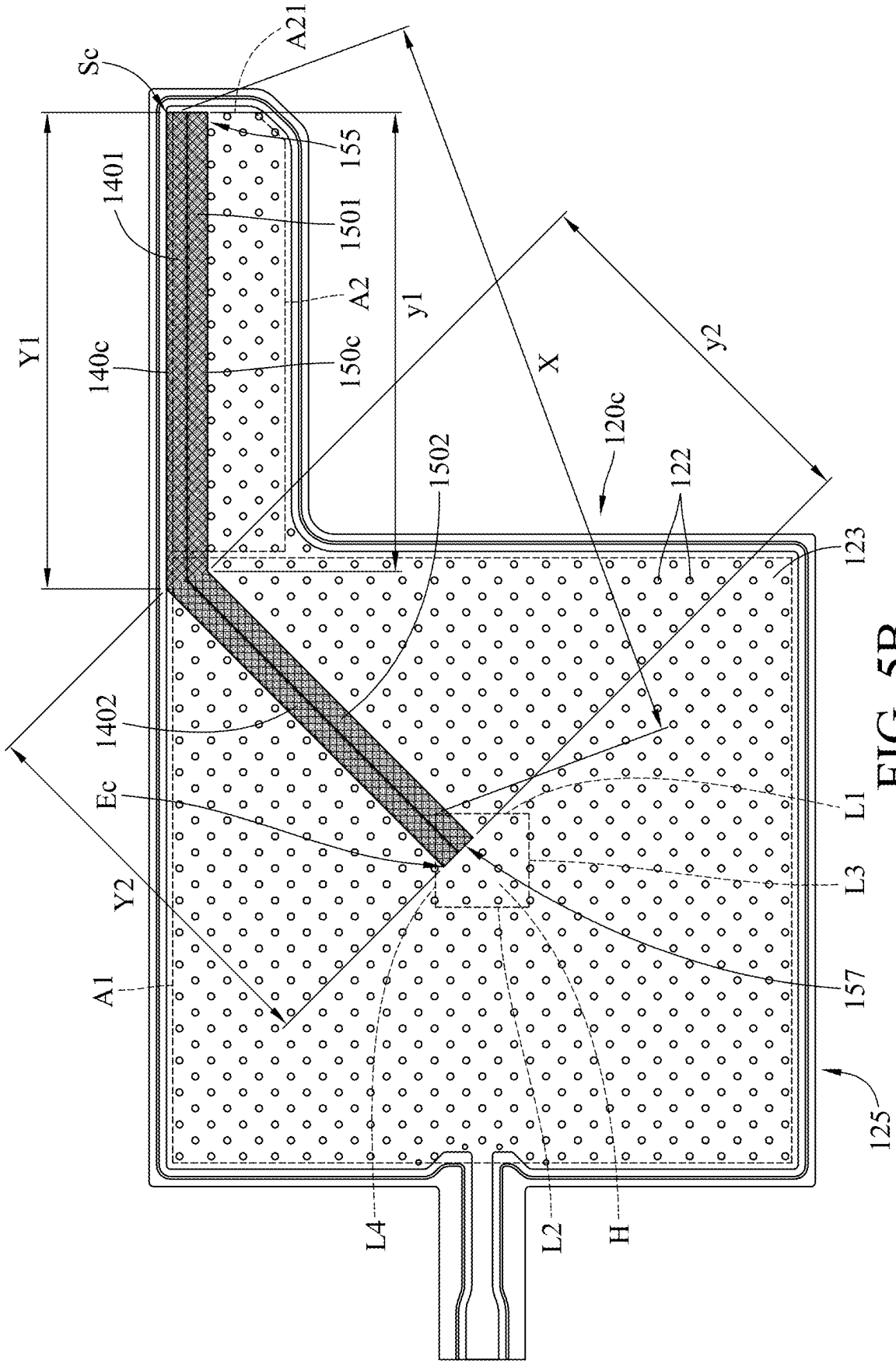
Sc
A21
155
1401
1501
A2
y1
Y1
140c
150c
X
y2
120c
1502
122
123
1402
Ec
L1
L3
Y2
A1
157
125
L4
L2
H

FIG. 5B

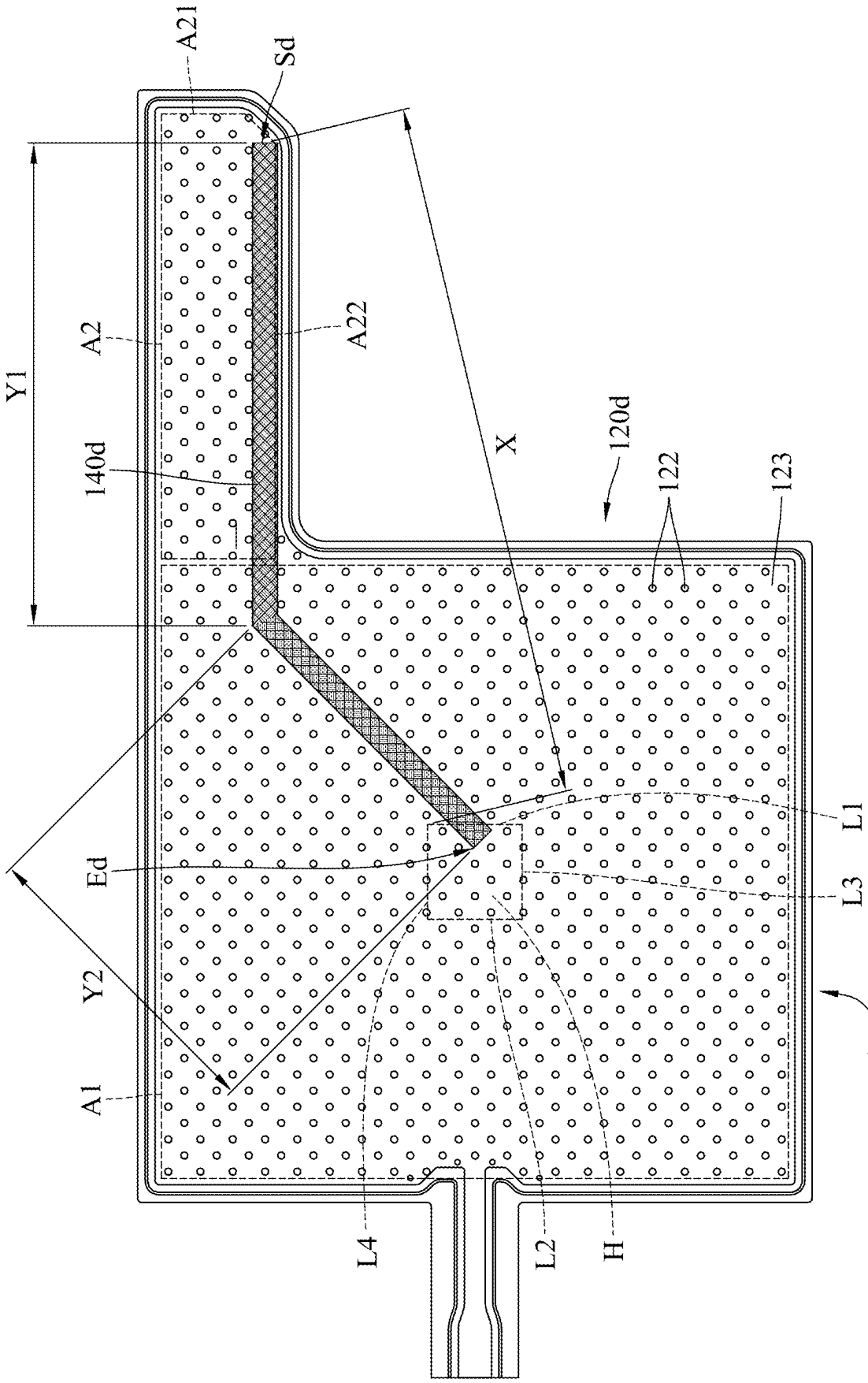

FIG. 6A

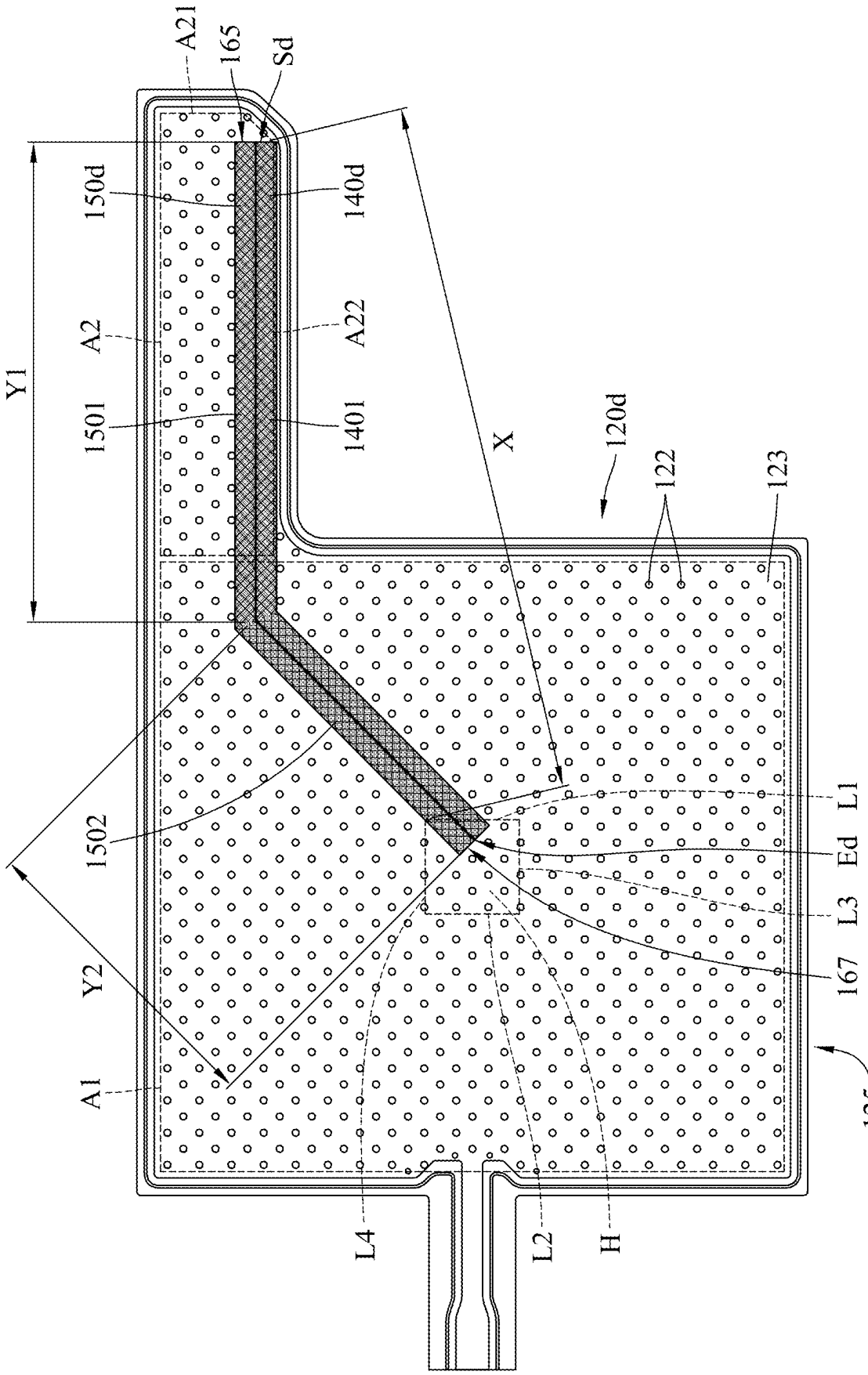
A21
165
Sd
150d
140d
A2
A22
Y1
1501
1401
X
120d
122
123
1502
L1
Ed
L3
167
Y2
A1
125
L4
L2
H

FIG. 6B

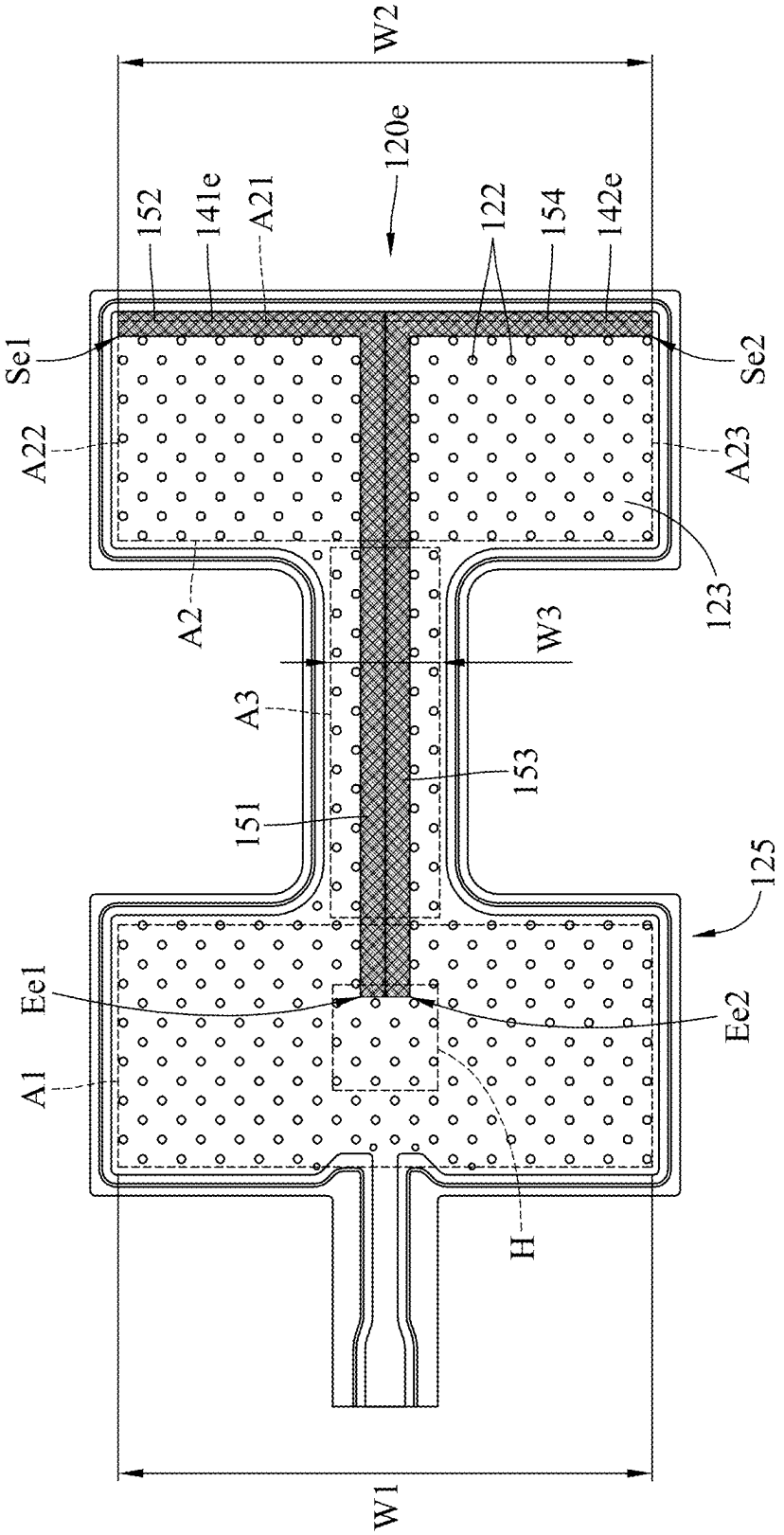
W2
120e
152
141e
A21
122
154
142e
Se1
Se2
A22
A23
123
A2
W3
A3
153
151
125
Ee1
Ee2
A1
H
W1

FIG. 7A

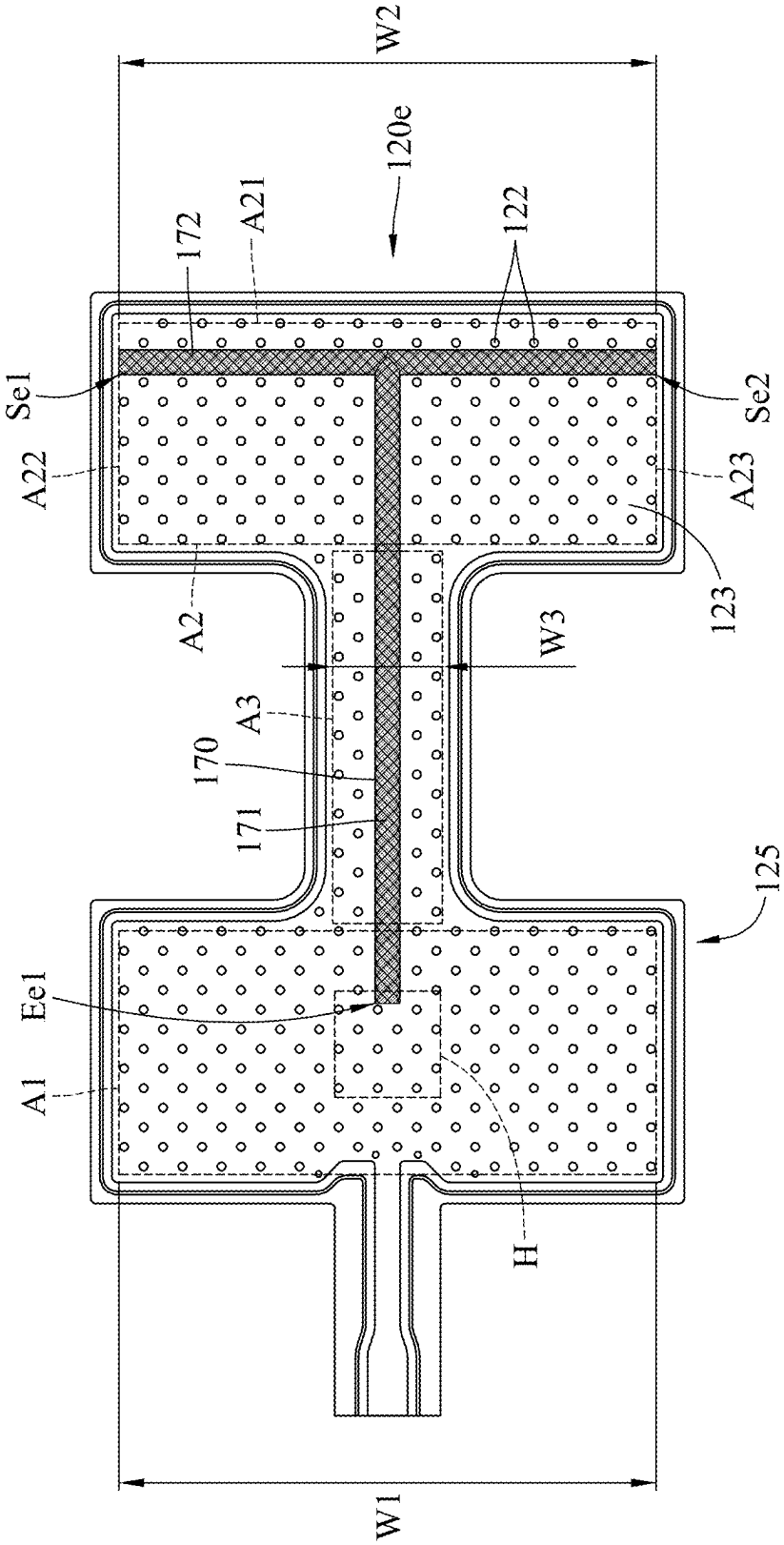
W2
120e
172
A21
122
Se1
Se2
A22
A23
123
A2
W3
A3
170
171
125
Ee1
A1
H
W1

FIG. 7B

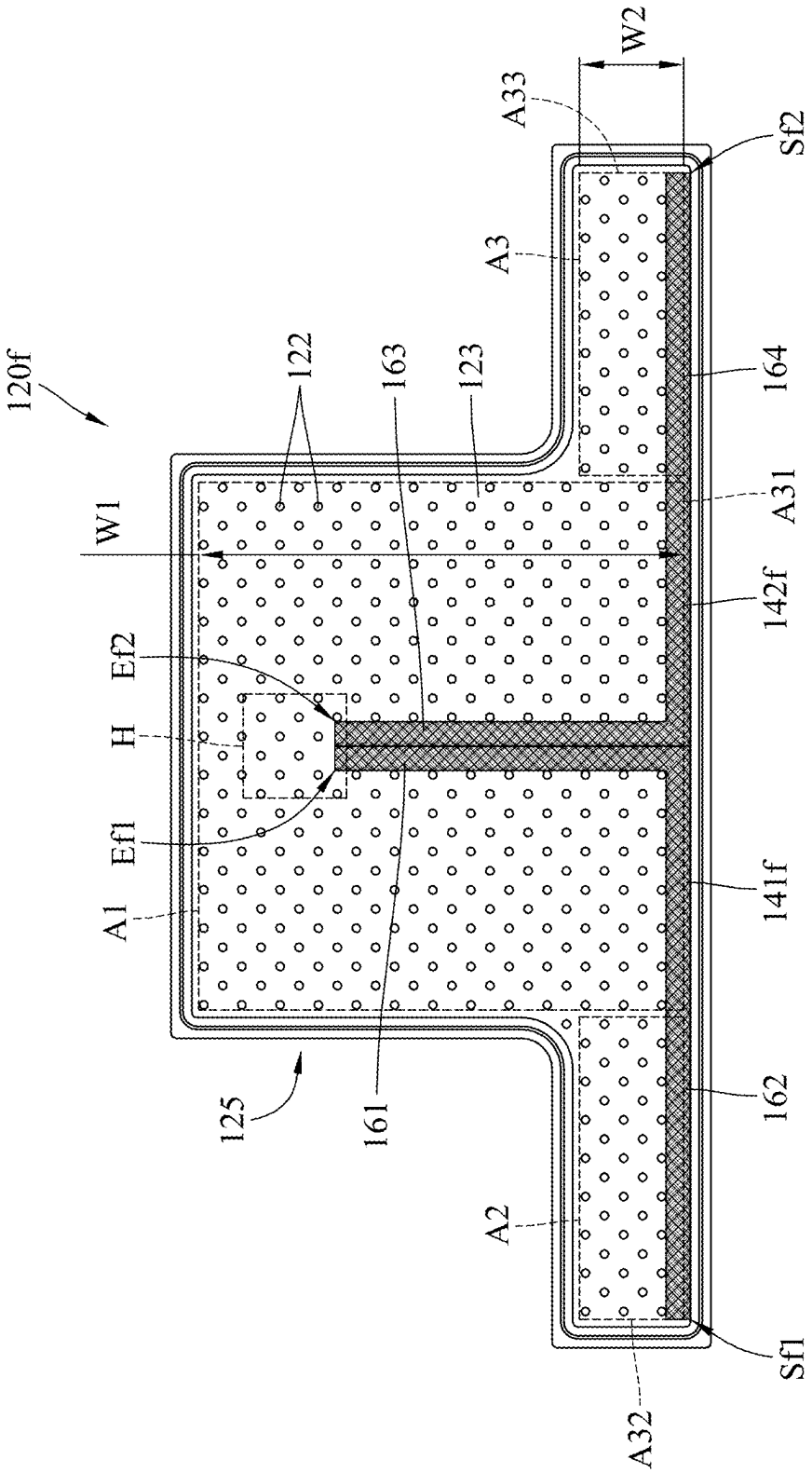
120f
W1
Ef2
H
Ef1
A1
125
122
161
163
123
A33
W2
A3
A2
A32
Sf2
Sf1
164
A31
142f
141f
162

FIG. 8A

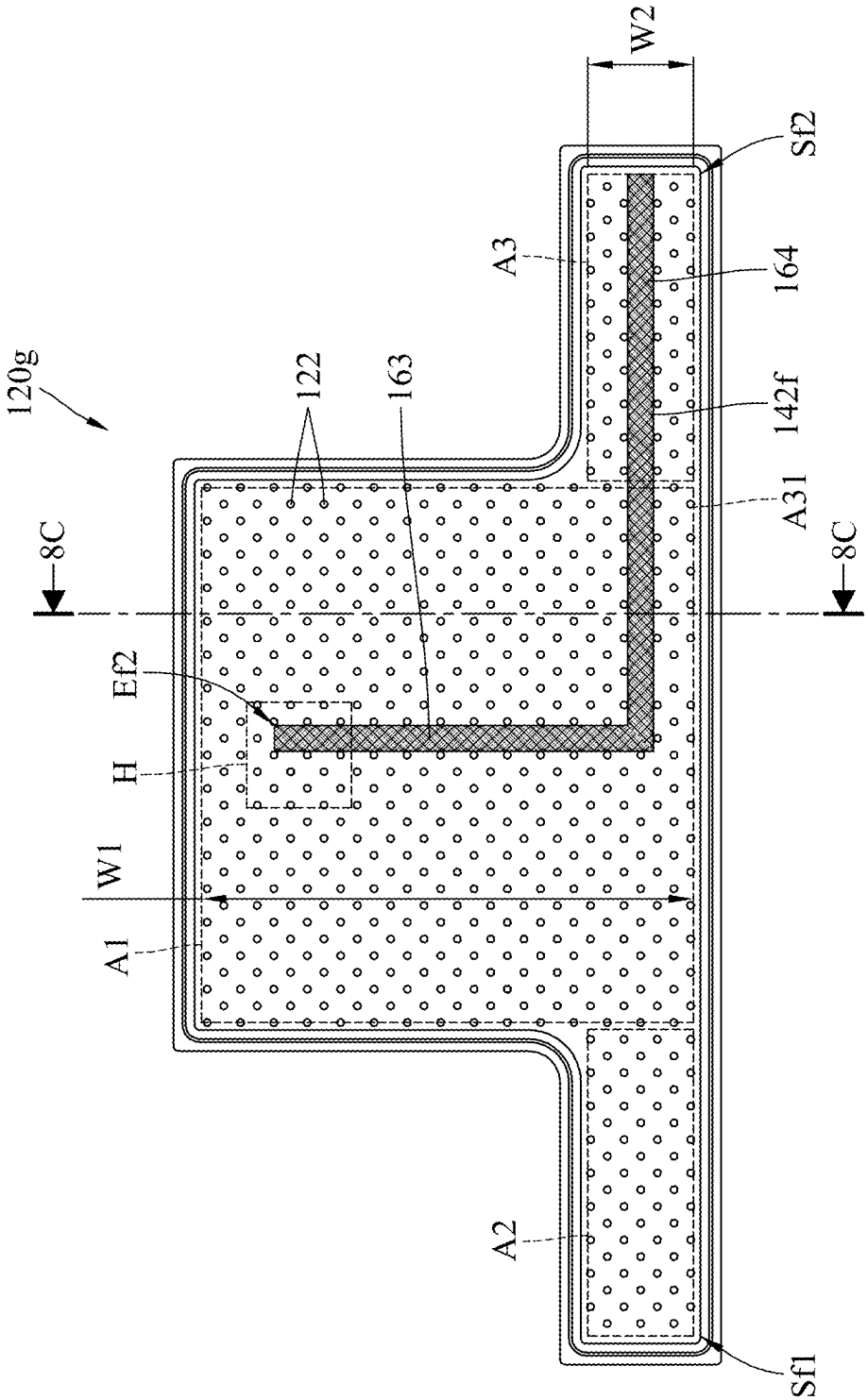

FIG. 8B

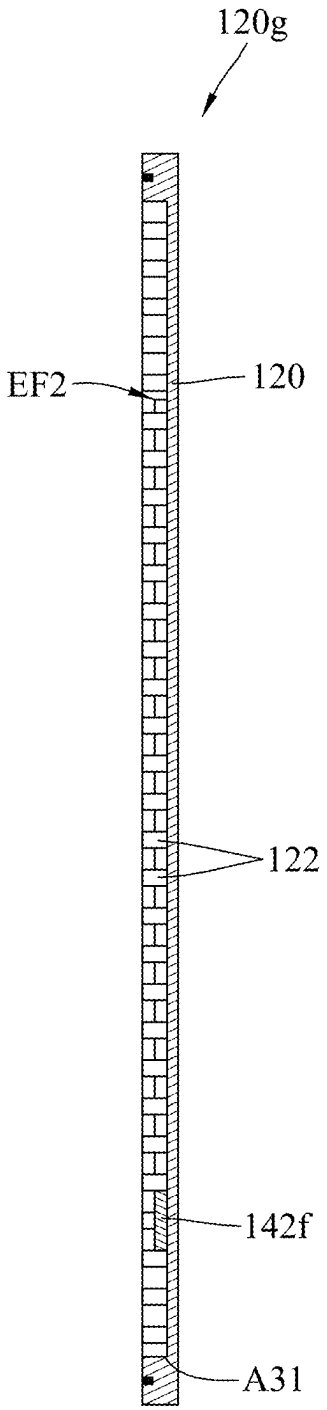

FIG. 8C

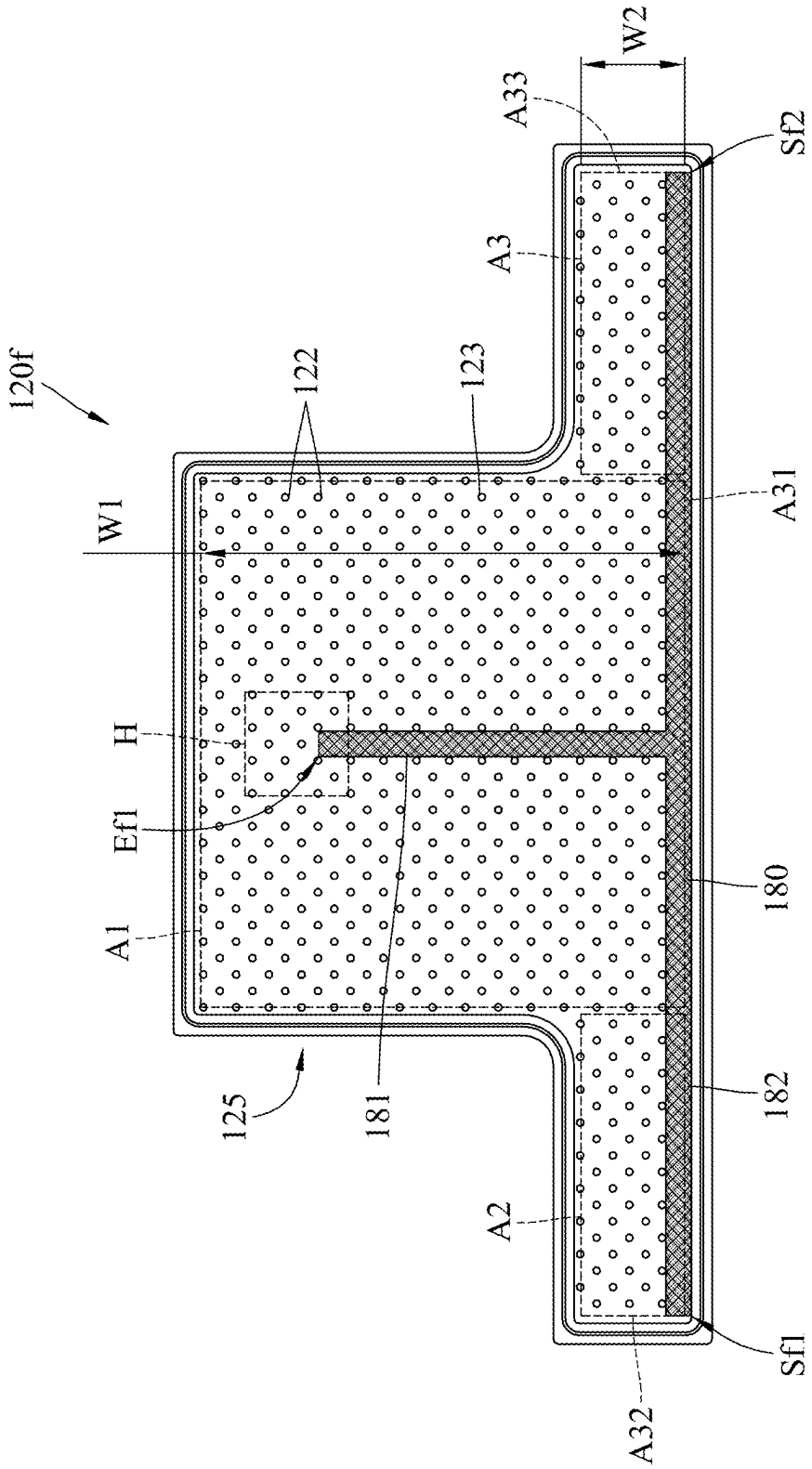
120f
W1
122
123
A3
A33
W2
Sf2
A31
H
Ef1
A1
125
181
180
182
A2
Sf1
A32

FIG. 8D

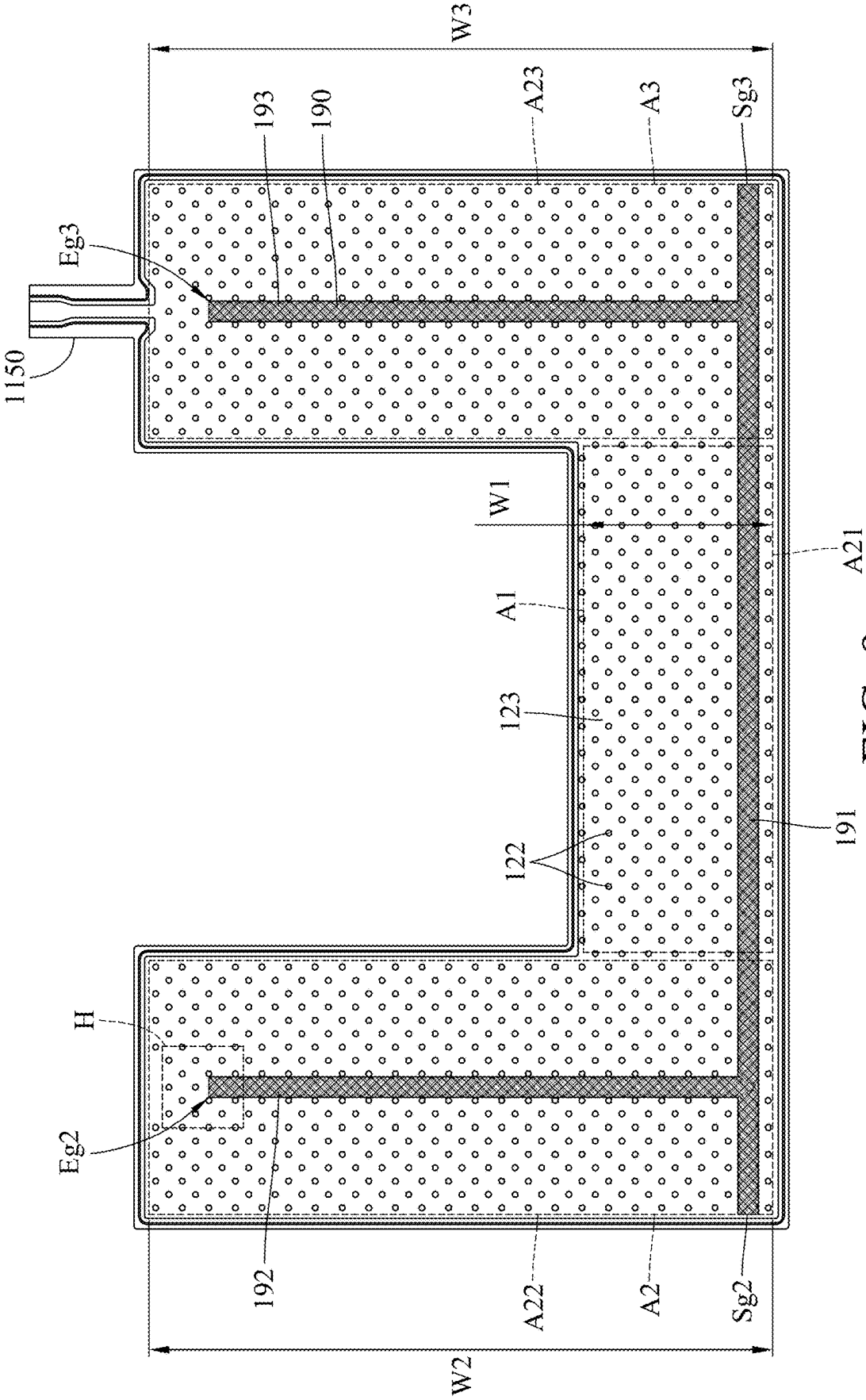
W3
193
190
A23
A3
Sg3
Eg3
1150
W1
A21
A1
123
191
122
H
Eg2
192
A22
A2
Sg2
W2

FIG. 9

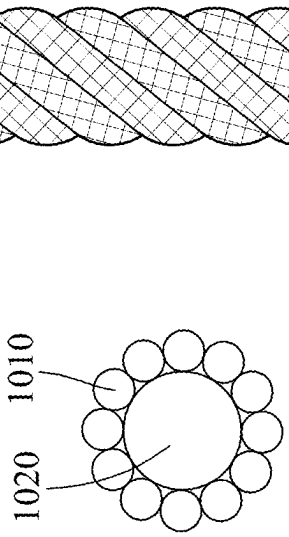

FIG. 10A

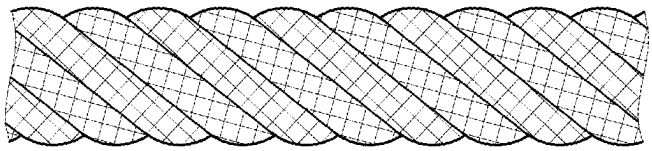

FIG. 10B

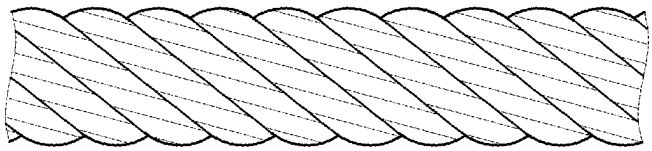

FIG. 10C

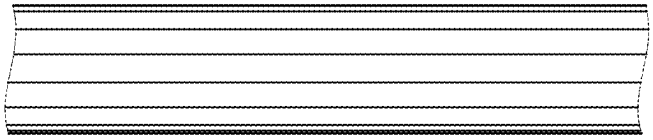

FIG. 10D

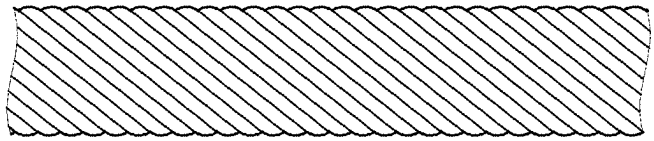

FIG. 10E

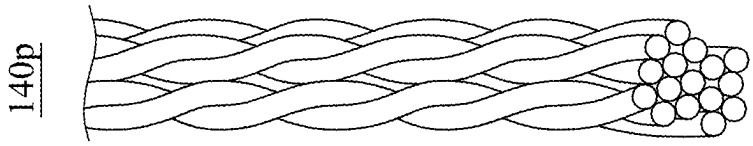

FIG. 10K

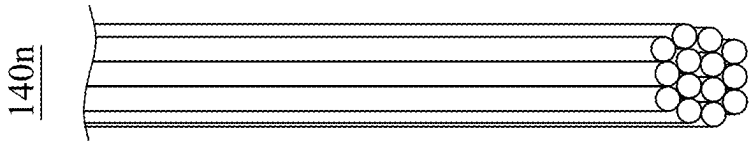

FIG. 10J

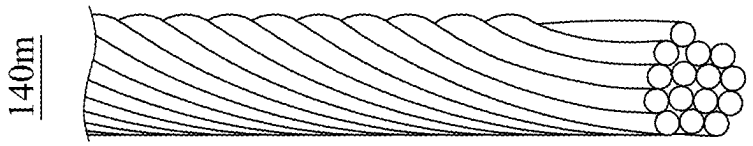

FIG. 10H

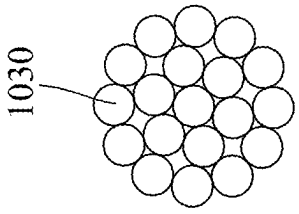

FIG. 10G

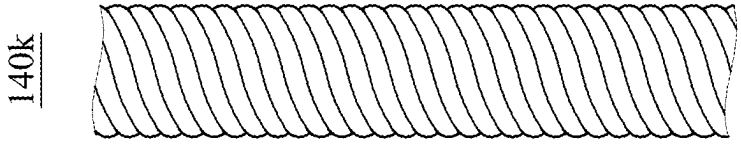

FIG. 10F

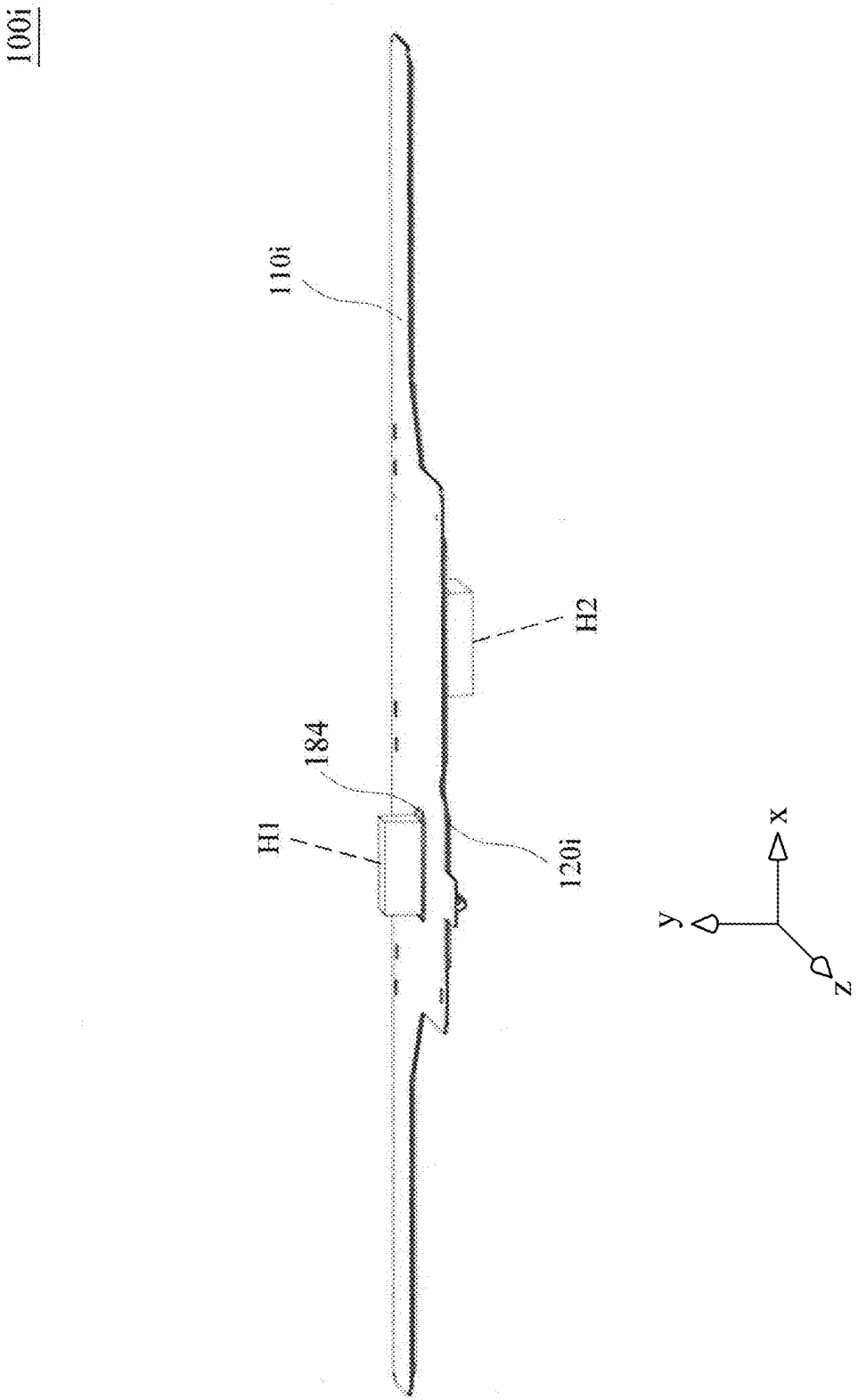

FIG. 11

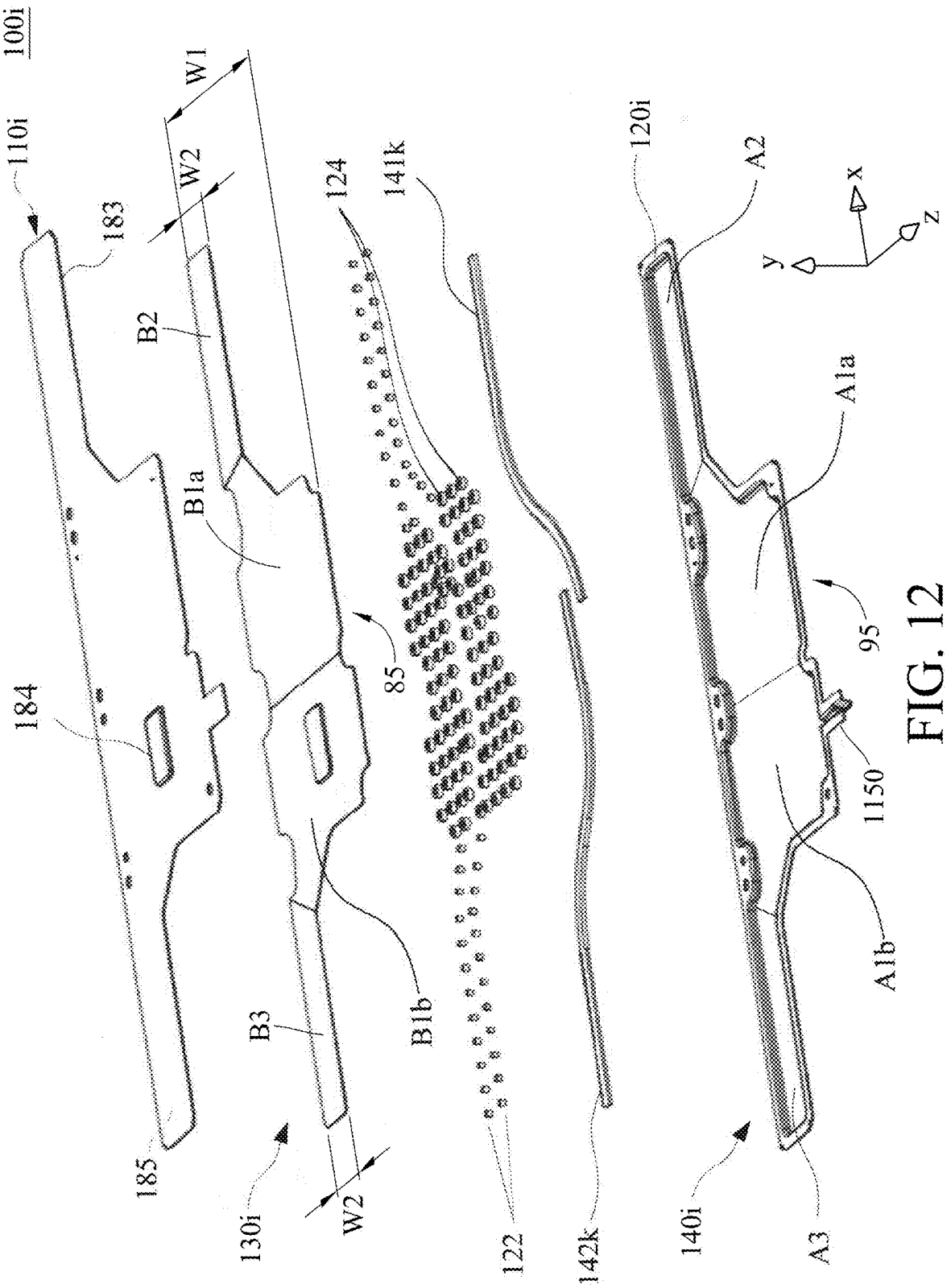
100i
110i
183
184
185
130i
B3
W2
B2
W1
W2
B1a
B1b
85
124
122
141k
142k
120i
A2
A1a
95
1150
A1b
140i
A3
x
y
z

FIG. 12

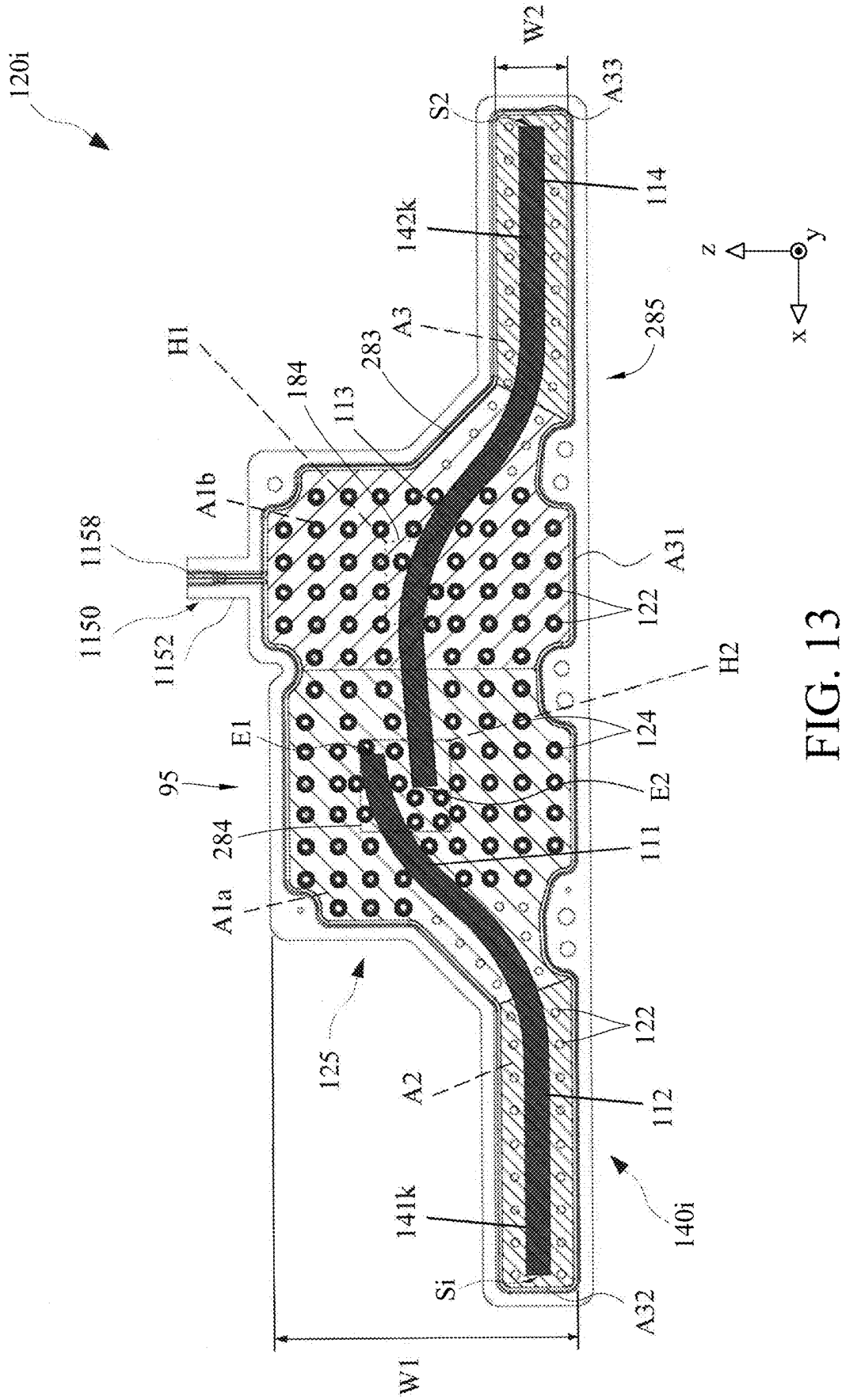
120i
W2
S2
A33
114
142k
A3
283
285
z
y
x
H1
184
113
A1b
1158
1150
1152
A31
122
H2
124
E1
95
E2
284
111
A1a
125
122
A2
112
141k
140i
Si
A32
W1

FIG. 13

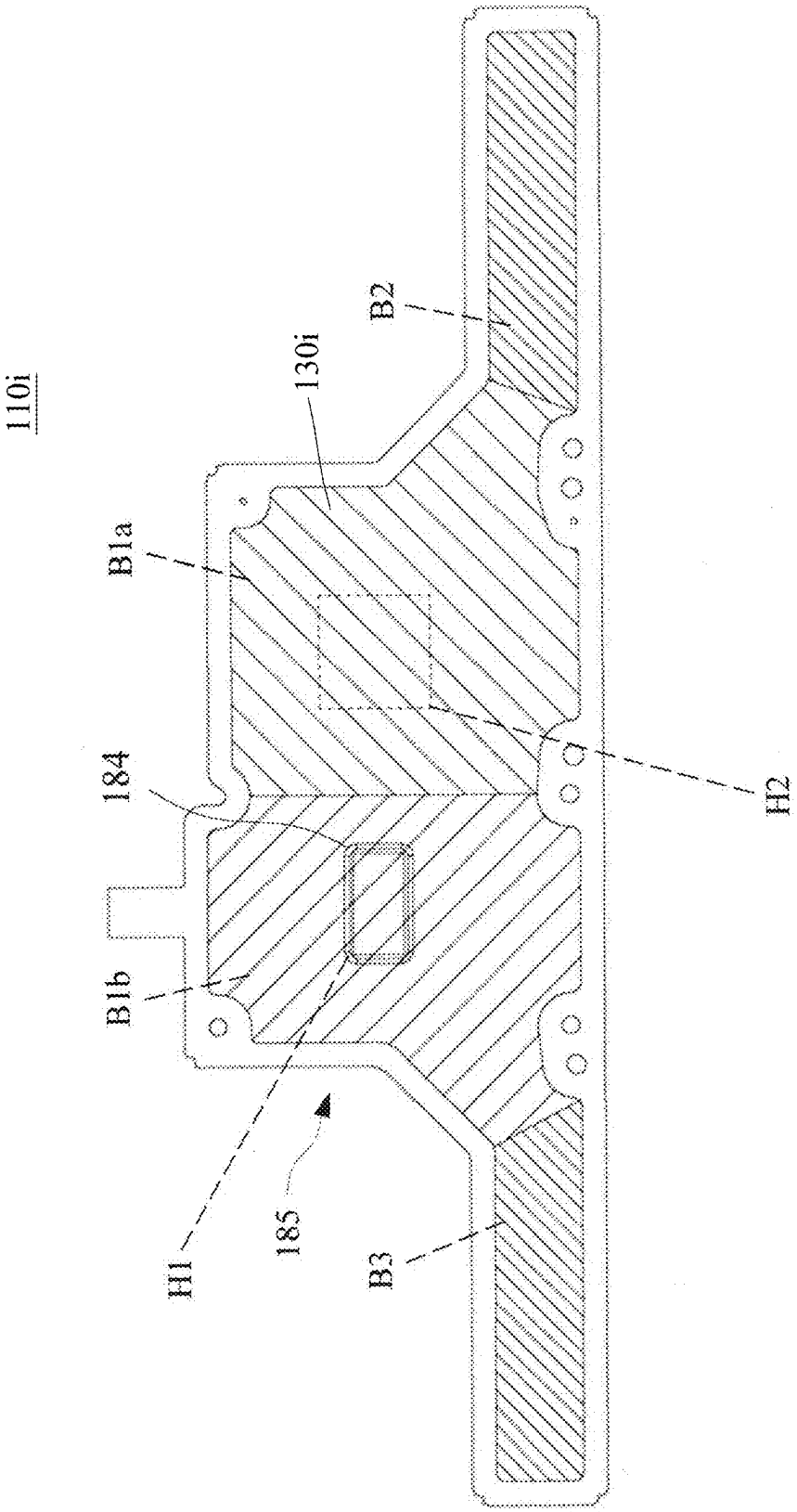

FIG. 14

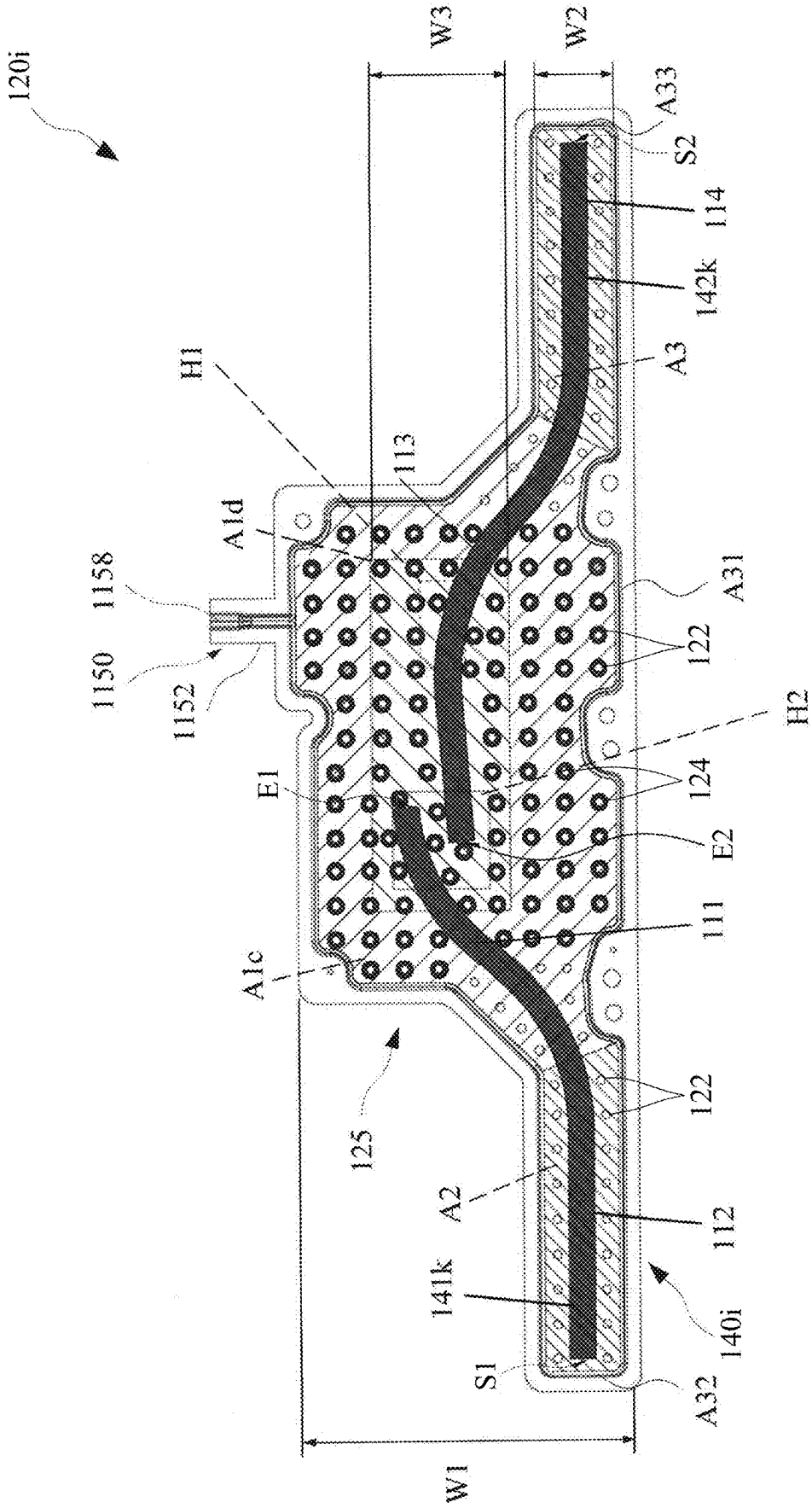
120i
W3
W2
A33
S2
114
142k
A3
H1
113
A1d
1158
1150
1152
A31
122
H2
124
E1
E2
111
A1c
125
122
A2
112
141k
140i
S1
A32
W1

FIG. 15

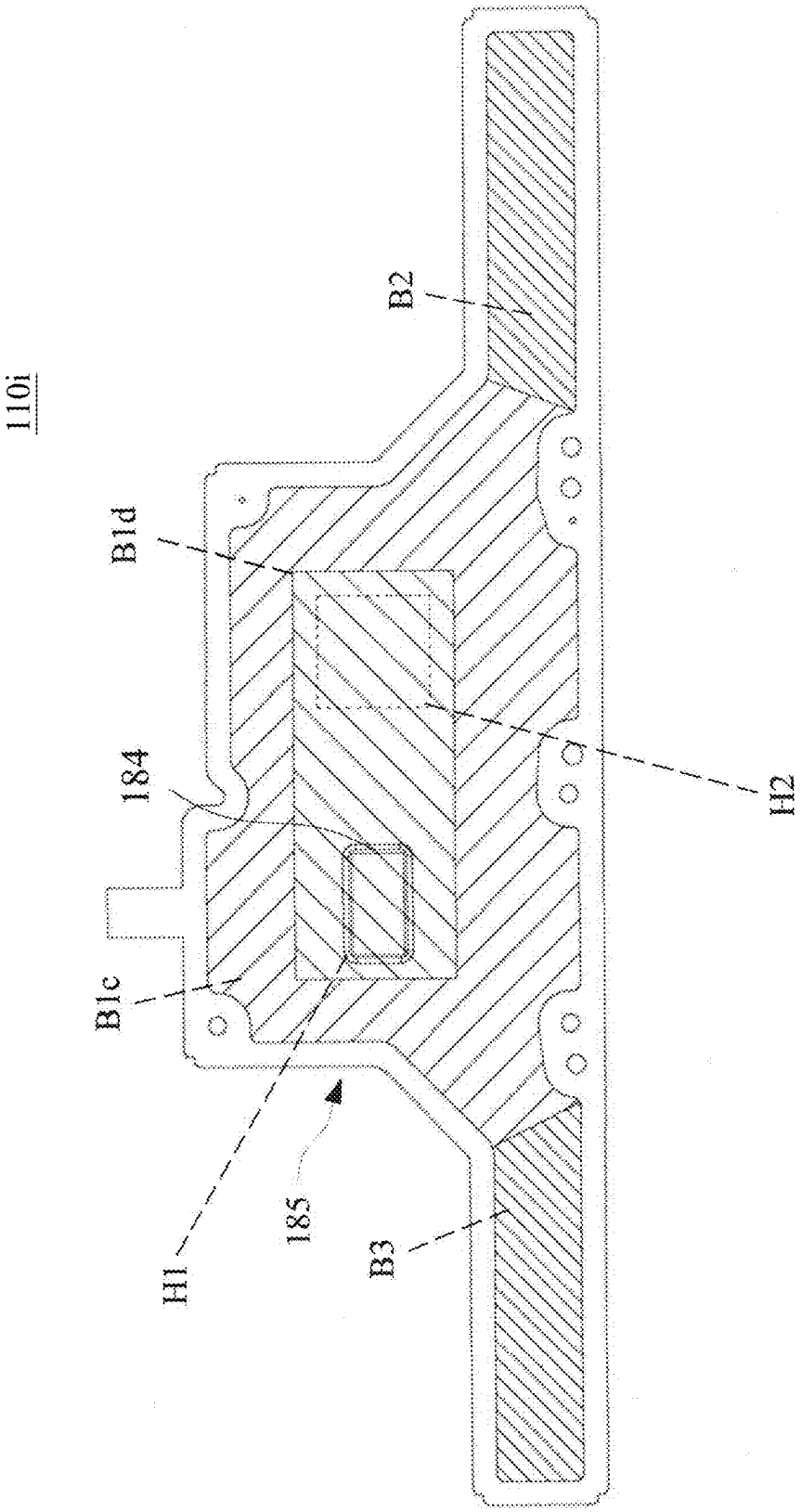

FIG. 16

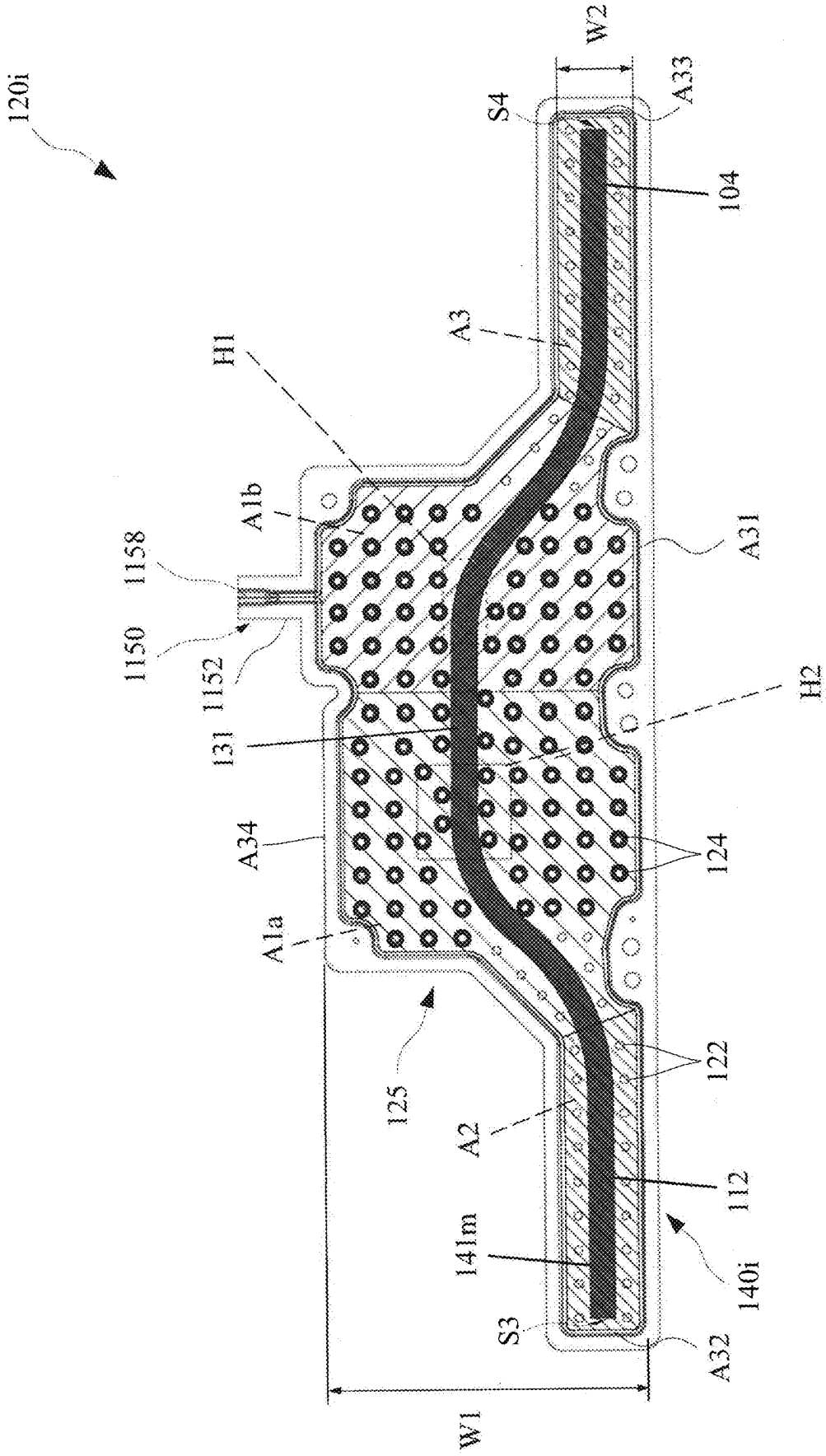
120i
W2
S4
A33
104
A3
H1
A1b
1158
1150
1152
A31
H2
131
A34
124
A1a
125
122
A2
112
141m
140i
S3
A32
W1

FIG. 17

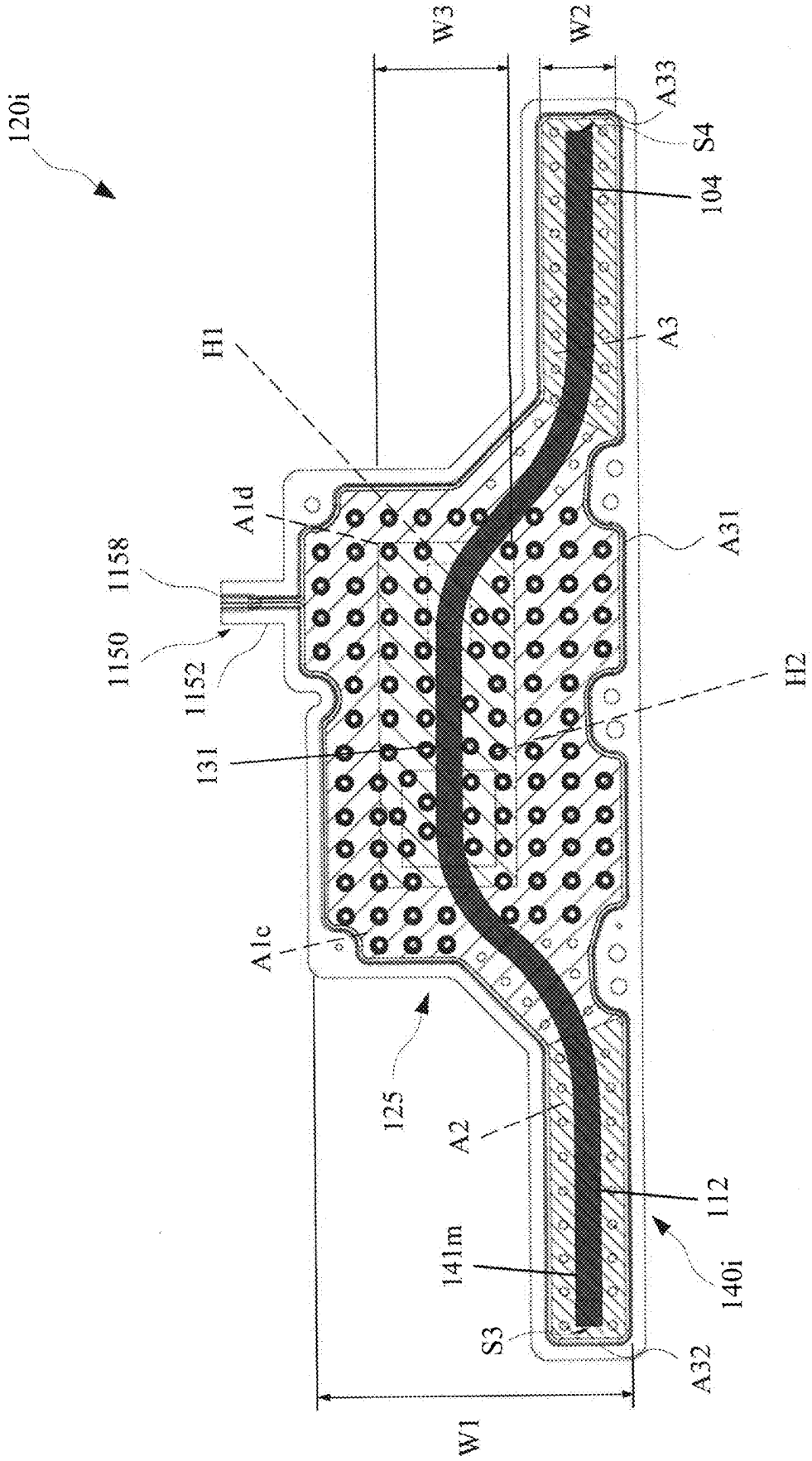
120i
W3
W2
A33
S4
104
A3
H1
A1d
1158
1150
1152
131
A31
H2
A1c
125
A2
112
141m
140i
S3
A32
W1

FIG. 18

HEAT DISSIPATION DEVICE HAVING IRREGULAR SHAPE

CROSS REFERENCE TO RELATED APPLICATIONS

[0001] This application is a divisional application of U.S. application Ser. No. 17/665,440, filed on Feb. 4, 2022, which is a continuation-in-part of U.S. Non-Provisional patent application Ser. No. 16/711,233 filed Dec. 11, 2019, which in turn claims priority under 35 U.S.C. § 119 to U.S. provisional patent application Nos. 62/783,717 filed Dec. 21, 2018, and 62/798,480 filed Jan. 30, 2019. This application also claims priority under 35 U.S.C. § 119 to Chinese patent application no. CN202120353801.1 filed Feb. 8, 2021, in the China National Intellectual Property Administration (CNIPA). The entire contents of all these applications are incorporated herein by reference.

BACKGROUND

[0002] Vapor chambers have higher efficiency in heat dissipation than heat pipes. A vapor chamber includes a casing and a wick structure. The casing defines a chamber for accommodating cooling fluid. The wick structure is disposed in the chamber. The casing has an evaporation section for absorbing heat and a condensation section for dissipating heat. The cooling fluid is evaporated into gaseous state in the evaporation section, and then turns into liquid state in the condensation section and is carried back to the section area by the wick structure, thereby creating circulating cooling fluid.

[0003] Electronic products have become lighter, slimmer, and more compact, and, as a result, vapor chambers are required to have an irregular shape in order to not interfere or obstruct nearby electrical components. In such a case, portions of the vapor chamber are required to have reduced dimensions, and the cross-sectional area of the wick structure in these portions is reduced compared to its cross-sectional area in other portions of the vapor chamber. In a vertically orientated vapor chamber, when a heat source is in thermal contact with the upper portion of the vapor chamber, cooling fluid in the vapor chamber is required to circulated against gravity. However, the flow of the cooling fluid stagnates in the reduced dimension portions due to the smaller cross-sectional area of wick structure in these portions. Thus, the flow of the cooling liquid is restricted through the narrow area and circulation of the cooling fluid in the vapor chamber is inhibited, thereby affecting the operation of the vapor chamber.

BRIEF DESCRIPTION OF THE DRAWINGS

[0004] The present disclosure is best understood from the following detailed description when read with the accompanying figures. It is emphasized that, in accordance with the standard practice in the industry, various features are not drawn to scale and are used for illustration purposes only. In fact, the dimensions of the various features may be arbitrarily increased or reduced for clarity of discussion.

[0005] FIG. **1** is an exploded view of a vapor chamber according to embodiments of the disclosure.

[0006] FIG. **2**A is a plan view of a second casing of the heat dissipation device in FIG. **1**, according to embodiments of the disclosure.

[0007] FIG. **2**B illustrates the encircled region **2**B of FIG. **2**A in greater detail.

[0008] FIG. **2**C illustrates the encircled region **2**C of FIG. **2**A in greater detail.

[0009] FIG. **2**D is a plan view of the second casing, according to embodiments of the disclosure.

[0010] FIG. **3** illustrates a plan view of a second casing including two wick structures, according to embodiments of the disclosure.

[0011] FIG. **4** illustrates a plan view of a second casing including three wick structures, according to embodiments of the disclosure.

[0012] FIG. **5**A illustrates a plan view of a second casing and a wick structure, according to embodiments of the disclosure.

[0013] FIG. **5**B illustrates a plan view of the second casing of FIG. **5**A including two wick structures, according to embodiments of the disclosure.

[0014] FIG. **6**A illustrates a plan view of a second casing and a wick structure, according to some embodiments.

[0015] FIG. **6**B illustrates the second casing of FIG. **6**A including the wick structure of FIG. **6**A and an additional wick structure, according to embodiments of the disclosure.

[0016] FIG. **7**A illustrates a plan view of a second casing including two wick structures, according to embodiments of the disclosure.

[0017] FIG. **7**B illustrates a plan view of the second casing of FIG. **7**A including a single wick structure, according to embodiments of the disclosure.

[0018] FIG. **8**A illustrates a plan view of a second casing including two wick structures, according to embodiments of the disclosure.

[0019] FIG. **8**B illustrates a plan view of a second casing including a wick structure, according to some embodiments.

[0020] FIG. **8**C illustrates a cross-sectional view of the second casing in FIG. **8**B, according to embodiments of the disclosure.

[0021] FIG. **8**D illustrates a plan view of the second casing including a single wick structure **180**, according to embodiments of the disclosure.

[0022] FIG. **9** illustrates a plan view of a second casing including a wick structure, according to embodiments of the disclosure.

[0023] FIG. **10**A is a cross-sectional view of a bundled wick structure including multiple wick fibers arranged around a central wick fiber, according to embodiments of the disclosure.

[0024] FIG. **10**B-**10**F illustrate different configurations of the wick structures of FIG. **10**A.

[0025] FIG. **10**G is a cross-sectional view of a bundled wick structure including multiple wick fibers, according to embodiments of the disclosure.

[0026] FIGS. **10**H, **10**J, and **10**K illustrate different configurations of the wick structures of FIG. **10**G.

[0027] FIG. **11** illustrates a front view of a vapor chamber, according to embodiments of the disclosure.

[0028] FIG. **12** illustrates an exploded view of a vapor chamber in FIG. **11**, according to embodiments of the disclosure.

[0029] FIG. **13** illustrates a plan view of a second casing including two wick structures, according to embodiments of the disclosure.

[0030] FIG. **14** illustrates a plan view of a first casing including a sheet-like wick structure, according to embodiments of the disclosure.

[0031] FIG. **15** illustrates a plan view of a second casing including two wick structures, according to embodiments of the disclosure.

[0032] FIG. **16** illustrates a plan view of a first casing including a sheet-like wick structure, according to embodiments of the disclosure.

[0033] FIG. **17** illustrates a plan view of a second casing including a wick structure, according to embodiments of the disclosure.

[0034] FIG. **18** illustrates a plan view of a second casing including a wick structure, according to embodiments of the disclosure.

DETAILED DESCRIPTION

[0035] It is to be understood that the following disclosure provides many different embodiments, or examples, for implementing different features of the disclosure. Specific embodiments or examples of components and arrangements are described below to simplify the present disclosure. These are, of course, merely examples and are not intended to be limiting. For example, dimensions of elements are not limited to the disclosed range or values, but may depend upon process conditions and/or desired properties of the device. Moreover, the formation of a first feature over or on a second feature in the description that follows may include embodiments in which the first and second features are formed in direct contact, and may also include embodiments in which additional features may be formed interposing the first and second features, such that the first and second features may not be in direct contact. Various features may be arbitrarily drawn in different scales for simplicity and clarity.

[0036] Further, spatially relative terms, such as "beneath," "below," "lower," "above," "upper" and the like, may be used herein for ease of description to describe one element or feature's relationship to another element(s) or feature(s) as illustrated in the figures. The spatially relative terms are intended to encompass different orientations of the device in use or operation in addition to the orientation depicted in the figures. The device may be otherwise oriented (rotated 90 degrees or at other orientations) and the spatially relative descriptors used herein may likewise be interpreted accordingly. In addition, the term "made of" may mean either "comprising" or "consisting of."

[0037] FIG. **1** is an exploded view of a heat dissipation device **100** according to embodiments of the disclosure. FIG. **2**A is a plan view of a second casing **120** of the heat dissipation device **100** in FIG. **1**, according to embodiments of the disclosure. For the purposes of discussion herein, the heat dissipation device **100** is considered to be a vapor chamber. However, embodiments are not limited thereto and embodiments disclosed herein are equally applicable to other types of heat dissipation devices without departing from the scope of the disclosure.

[0038] Referring to FIGS. **1** and **2**A, the vapor chamber **100** is a generally flat, planar structure including a first casing **110**, a second casing **120**, a sheet-like wick structure **130**, and a wick structure **140**. The vapor chamber **100** is referred to as a thin heat spreader. The vapor chamber **100** has a thickness less than approximately 1 millimeter.

[0039] The first casing **110** and the second casing **120** may be composed of, for example, oxygen-free copper, silicon-containing copper alloy, aluminum-containing copper alloy, a combination thereof, and the like. Referring to FIG. **2**A, the second casing **120** includes a main body **121** and a plurality of supporting structures **122**. The supporting structures **122** protrude (or otherwise project) from an inner surface **123** of the main body **121** towards the first casing **110** and contact the first casing **110**. The supporting structures **122** reduce buckling of the first casing **110** and the second casing **120** and this limit deformation of the vapor chamber **100**. In some embodiments, the supporting structures **122** are column or pillar shaped having a diameter of about 0.4 mm to about 0.8 mm. However, embodiments are not limited in this regard. Other shapes and sizes are also possible provided the plurality of supporting structures **122** limit buckling of the first casing **110** and second casing **120**.

[0040] FIG. **2**B illustrates the encircled region **2**B of FIG. **2**A in greater detail. In some embodiments, and as illustrated, the supporting structures **122** are arranged in rows (or columns) with immediately adjacent rows offset from each other. For example, as illustrated in FIG. **2**B, the supporting structures **122** in row **131** are offset from the supporting structures **122** in row **133**. In some embodiments, the distance DI between alternate rows of supporting structures **122** (e.g., rows **131** and **135**) is twice the distance between adjacent rows of supporting structures **122** (e.g., rows **131** and rows **133**). In some embodiments, the distance D**1** is between 3.5 mm to 4.5 mm and the distance D**2** is between 1.5 mm to 2.5 mm. However, embodiments are not limited in this regard, and the distances DI and D**2** can be varied as required by application and design provided the plurality of supporting structures **122** limit buckling of the first casing **110** and second casing **120**.

[0041] FIG. **2**C illustrates the encircled region **2**C of FIG. **2**A in greater detail. As illustrated, the inner surface **123** includes a first fixing structure **175** along the outer periphery of the second casing **120** and a second fixing structure **177** surrounding the first fixing structure **175** and along the outer periphery of the second casing **120**. In some embodiments, the first fixing structure **175** and the second fixing structure **177** define a channel or groove **173** therebetween. The inner surface of the first casing **110** includes a corresponding protrusion that is received in the groove **173** for securing the first casing **110** and the second casing **120** to each other.

[0042] In some embodiments, the thickness of the first casing **110** is smaller than the thickness of the second casing **120**. As an example, the thickness of first casing **110** is about 0.1 mm to about 0.15 mm and the thickness of the second casing **120** is about 0.2 mm to about 0.35 mm. An overall thickness of the vapor chamber **100** including the first casing **110** and the second casing **120** is about 0.3 mm to 0.5 about mm. However, embodiments are not limited in this regard, and the thickness of the first casing **110** may be greater than the thickness of the second casing **120**.

[0043] The inner surface **123** is opposite to the outer surface **125** of the main body **121**. The outer surface **125** forms part of the outer surface of the vapor chamber **100** and is substantially planar. The first casing **110** is connected to the main body **121** of the second casing **120** by welding, soldering, brazing, or diffusion bounding. The second casing **120** has a first or "broad" portion A**1** and a second or "narrow" portion A**2**. The first portion A**1** has a width W**1** and the second portion A**2** has a width W**2**. The width W**1**

is larger than the width W**2**. The first portion has length L**1** and the second portion has a length L**2**. The sum of the lengths L**1** and L**2** is the length L**3** of the longest side of the vapor chamber **100**. It will thus be understood that each of the first portion A**1** and the second portion A**2** has a different cross-sectional area. In an embodiment, the width W**1** of the first portion A**1** is approximately 80 millimeters (mm), the width W**2** of the second portion A**2** is approximately 18 mm. The length L**2** is about 90 mm to about 100 mm, and the length L**3** is about 120 mm to about 130 mm. However, embodiments are not limited in this regard and can be varied depending on the application and design requirements. In other embodiments, the width W**2** of the second portion A**2** may be equal to or less than half of the width W**1** of the first portion A**1**. In still other embodiments, the width W**2** of the second portion A**2** may be equal to or less than one-third of the width W**1** of the first portion A**1**.

[0044] The wick structure **130** is disposed between the first casing **110** and the second casing **120**. The wick structure **130** includes, for example, copper mesh. The wick structure **130** contacts the first casing **110** and the wick structure **140**. The wick structure **130** provides a flow path for the cooling fluid circulating in the vapor chamber **100**.

[0045] The wick structure **140** may be or include a bundle of copper wires twisted to form a single helical structure. The wick structure **140** is located in the gaps between the supporting structures **122** and contacts the inner surface **123** of the second casing **120**, and thereby is in contact with the second casing **120**. Although the wick structure **140** has been disclosed as a bundle of wires twisted into a helical structure, embodiments are not limited thereto. In other embodiments, the wick structure **140** may be or include a copper sintered powder wick structure including copper wires interlaced or twisted into a bundle. In some other embodiments, the wick structure **140** may be or include a plurality of the bundles of wires being interlaced or twisted. In still other embodiments, the wick structure **140** includes a screen mesh wick structure or groove wick structure.

[0046] In an embodiment and as illustrated, the wick structure **140** is longitudinally extending structure and relatively straight (without any curves or bends) disposed proximate upper ends of the first portion A**1** and second portion A**2**. One end S of the wick structure **140** is located in the second portion A**2** and proximate (but not contacting) a lateral edge A**21** of the second portion A**2**. The lateral edge A**21** is outer edge of the second portion A**2**, and thereby of the second casing **120**. In some embodiments, the end S of the wick structure **140** may not contact with the edge A**21** of the second portion A**2**, and may be spaced apart from the edge A**21** of the second portion A**2**. The other longitudinally opposite end E of the wick structure **140** is located in the first portion A**1**. A heat source H is attached to the outer surface of the first casing **110** and thereby the outer surface of the vapor chamber **100** using a thermal paste, or other known techniques. FIG. **2** illustrates a vertical projection (dashed box) of the heat source H on the second casing **120**. The heat source H is illustrated as square shaped for the sake of illustration. It will be understood that the shape of the heat source H is not limited to a square shape and the heat source H can have any desired shaped. The end E of the wick structure **140** is spaced (e.g., vertically, in FIG. **2**) from the heat source H by a distance D. The distance D is approximately 18.5 mm, but embodiments are not limited thereto. In some embodiments, the end E of the wick structure **140** may overlap the heat source H or the end E and boundary (edges) of the heat source H may be coincident. It will be understood that the distance D between the end E of the wick structure **140** and the heat source H is not limited to any particular value and may be adjusted according to the size or shape of the vapor chamber and as per user and design requirements.

[0047] The vapor chamber **100** includes a working appendage **1150** that is cooperatively formed by a protrusion **1152** of the second casing **120** and a corresponding protrusion of the first casing **110**. The working appendage **1150** includes a charging channel **1158** formed by the first casing **110** and the second casing **120**. The charging channel **1158** fluidly communicates with the interior cavity of the vapor chamber **100** formed by the inner surface **123** of the second casing **120** and the inner surface of the first casing **110**. The working appendage **1150** is used to fill the interior cavity of the vapor chamber **100** with working fluid and vacuuming out the air from the interior cavity. In some embodiments, the working appendage **1150** is centrally located along the width W**1**. However, in other embodiments, the working appendage **1150** is located offset from the central location or located on other sides or surfaces of the vapor chamber **100**.

[0048] FIG. **2**D is a plan view of the second casing **120**, according to embodiments of the disclosure. In contrast to FIG. **2**A, as illustrated, the wick structure **140** is located proximate a lower end of the second portion A**2**. The distance D between the end E of the wick structure **140** and the heat source H is thus reduced. The wick structure **140** is spaced from the lateral edge A**21** of the second portion A**2**.

[0049] In some embodiments, the vapor chamber **100** may include more than one wick structure **140**. FIG. **3** illustrates a plan view of a second casing **120***a* including two wick structures **141***a* and **142***a*, according to embodiments of the disclosure. The second casing **120***a* may be used instead of the second casing **120** in FIGS. **1** and **2** in the vapor chamber **100**. The second casing **120***a* may be similar in some respects to the second casing **120** in FIG. **2**, and therefore may be best understood with reference thereto where like numerals designate like components not described again in detail.

[0050] As illustrated, each of the wick structures **141***a* and **142***a* are longitudinally extending structures and are straight structures (without bends or curves) and are disposed on the second casing **120***a*. The wick structures **141***a* and **142***a* are located in the gaps between the supporting structures **122** and each contacts the inner surface **123** of the second casing **120***a*. In an embodiment, the wick structures **141***a* and **142***a* have different lengths. For example, and as illustrated, the wick structure **141***a* is longer than the wick structure **142***a*. The wick structures **141***a* and **142***a* contact each other along the longitudinal edges thereof and are arranged side by side. One end Sa**1** of the wick structure **141***a* is located in the second portion A**2** and is in contact with the edge A**21** of the second portion A**2**. The longitudinally opposite end Ea**1** of the wick structure **141***a* is located in the first portion A**1** and spaced (e.g., vertically, in FIG. **3**) from the heat source H. One end Sa**2** of the wick structure **142***a* is located in the second portion A**2**, and the longitudinally opposite end Ea**2** of the wick structure **142***a* is located in the first portion A**1** and spaced (e.g., vertically, in FIG. **3**) from the heat source H. As illustrated, the ends Ea**1** and Ea**2** are coincident with each other (e.g., located at a same distance from the edge A**21**). However, in other embodiments, the ends Ea**1** and

Ea**2** are non-coincident (e.g., located at different distances from edge A**21**) in the first portion A**1**.

[0051] Compared to the embodiment in FIG. **2**, the second casing **120***a* in FIG. **3** includes the additional wick structure **142***a* extending from the second portion A**2** toward the heat source H. The wick structure **142***a* improves circulation of cooling fluid in the vapor chamber **100**, for example, against gravity. Thus, the efficiency of the vapor chamber **100** in dissipating heat is improved.

[0052] FIG. **4** illustrates a plan view of a second casing **120***b* including three wick structures **141***a,* **142***a,* and **143***a,* according to embodiments of the disclosure. The second casing **120***b* may be used instead of the second casing **120** in FIGS. **1** and **2** in the vapor chamber **100**. The second casing **120***b* may be similar in some respects to the second casings **120** and **120***a* in FIGS. **2** and **3**, and therefore may be best understood with reference thereto where like numerals designate like components not described again in detail.

[0053] Referring to FIG. **4**, each of the wick structures **141***a,* **142***a,* and **143***a* are longitudinally extending structures and are straight structures (without bends or curves) and disposed on the second casing **120***b*. The wick structures **141***a,* **142***a,* and **143***a* are located in the gaps between the supporting structures **122** and each contacts the inner surface **123** of the second casing **120***b*. In an embodiment, the wick structures **141***a,* **142***a,* and **143***a* have different lengths. For example, and as illustrated, the wick structure **141***a* is longer than the wick structures **142***a* and **143***a*. The wick structures **141***a* and **142***a* contact each other along the longitudinal edges thereof and arranged side by side. The wick structure **143***a* is spaced (e.g., vertically, in FIG. **4**) from the wick structures **141***a* and **142***a*. One end Sa**1** of the wick structure **141***a* is located in the second portion A**2** and contacts the edge A**21** of the second portion A**2**. The longitudinally opposite end Ea**1** of the wick structure **141***a* is located in the first portion A**1** and spaced from the heat source H (illustrated in phantom). One end Sa**2** of the wick structure **142***a* is located in the second portion A**2**, and the longitudinally opposite end Ea**2** of the wick structure **142***a* is located in the first portion A**1** and spaced from the heat source H. As illustrated, the ends Ea**1** and Ea**2** are coincident with each other (e.g., located at a same distance from the edge A**21**). However, in other embodiments, the ends Ea**1** and Ea**2** are non-coincident. One end Ea**3** of the wick structure **143***a* is collinear (e.g., aligned) with the heat source H on the outer surface of first casing **110**, and the other end Sa**3** of the wick structure **143***a* is located in the first portion A**1** and contacts a vertical edge A**11** of the first portion A**1**. As illustrated, the wick structure **143***a* is entirely within the first portion A**1**. The horizontal distance between the end Ea**3** of the wick structure **143***a* and the heat source H is less than the vertical distance between the end Ea**2** of the wick structure **142***a* and the heat source H. Although, the wick structures **141***a,* **142***a,* and **143***a* are indicated as having different lengths, embodiments are not limited thereto. In some embodiments, the wick structures **142***a* and **143***a* may have the same lengths. In other embodiments, the end Sal of the wick structure **141***a* and end Sa**2** of the wick structure **142***a* may located at a same distance from the edge A**21**.

[0054] Compared to embodiment of FIG. **3**, the second casing **120***b* in of FIG. **4** includes an additional wick structure **143***a* extending from the edge of the first portion A**1** toward the heat source H. The wick structure **143***a* further improves circulation of cooling fluid in the vapor chamber **100**, for example, against gravity. Thus, the efficiency of the vapor chamber **100** in dissipating heat is further improved.

[0055] FIG. **5**A illustrates a plan view of a second casing **120***c* and a wick structure **140***c,* according to embodiments of the disclosure. The second casing **120***c* may be used instead of the second casing **120** in FIGS. **1** and **2** in the vapor chamber **100**. The second casing **120***c* may be similar in some respects to the second casing **120** in FIG. **2**, and therefore may be best understood with reference thereto where like numerals designate like components not described again in detail.

[0056] As illustrated, the wick structure **140***c* is disposed in the second casing **120***c* and has at least one bend. The wick structure **140***c* is located in the gaps between the supporting structures **122** and contacts the inner surface **123** of the second casing **120**. An end Sc of the wick structure **140***c* is located in the second portion A**2** and contacts the edge A**21** of the second portion A**2** and the opposite end Ec of the wick structure **140***c* is located in the first portion A**1** and overlaps at least part of the heat source H (illustrated in phantom) attached to the outer surface of the first casing **110**. In an example, and as illustrated the wick structure **140***c* at least partially overlaps one side or end of the heat source H that is closer to the wick structure **140***c*. For the sake of explanation, it is assumed that the heat source H has a generally rectangular shape including a first side L**1** and a second side L**2** opposite the first side L**1**, and a third side L**3** and a fourth side LA opposite the third side L**3**. The first side L**1** is closer to the edge A**21**. The fourth side L**4** is closer to the wick structure **140***c*. The wick structure **140***c* overlaps the fourth side L**4** of the heat source H.

[0057] As illustrated, the wick structure **140***c* includes two sections **1401** and **1402**, having lengths Y**1** and Y**2**, respectively. The sections **1401** and **1402** are connected to each other at an angle (greater than 0° and less than 180°). The overall length of the wick structure **140***c* is the sum of the lengths Y**1** and Y**2**. In an example, the overall length is approximately 118 mm, but the disclosure is not limited thereto. In other embodiments, the overall length of the wick structure **140***c* increased or decreased as long as the wick structure **140***c* is accommodated within the vapor chamber **100**. In an embodiment, an extent of the wick structure **140***c* may be equal to the minimum distance X between the end Sc of the wick structure **140***c* and the heat source H. More specifically, the minimum distance X is measured from the end Sc to a point on the heat source H nearest to the end Sc as projected vertically on the inner surface **123**. For instance, the distance X is approximately 105 mm. The heat dissipation efficiency of the vapor chamber including the wick structure **140***c* is relatively higher when the overall length of the wick structure **140***c* is equal to or less than about 126 mm.

[0058] The wick structure **140***c* decreases a distance the cooling fluid has to circulate in the vapor chamber **100**. The length of the wick structure **140***c* is not limited to any particular length and may be adjusted according to user and design requirements.

[0059] FIG. **5**B illustrates a plan view of the second casing **120***c* including the wick structure **140***c* and a wick structure **150***c,* according to embodiments of the disclosure. The wick structure **150***c* is shaped and sized (or otherwise configured) similar to the wick structure **140***c*. The wick structure **150***c* contacts the wick structure **140***c* at a bottom side thereof. As

illustrated, the wick structure **150***c* is located in the gaps between the supporting structures **122** and contacts the inner surface **123** of the second casing **120***c*. An end **155** of the wick structure **150***c* is located in the second portion A**2** and contacts the edge A**21** of the second portion A**2** and the opposite end **157** of the wick structure **150***c* is located in the first portion A**1** and overlaps at least part of the heat source H (illustrated in phantom) attached to the outer surface of the first casing **110**. As depicted, the ends **155** and **157** of the wick structure **150***c* are aligned with the ends Sc and Ec of the wick structure **140***c*.

[0060] In some embodiments, the wick structure **150***c* overlaps a same side of the heat source H as overlapped by the wick structure **140***c*. In other embodiments, the wick structure **150***c* overlaps a different side of the heat source H. The extent of the wick structure **150***c* is the same as the extent of the wick structure **140***c*.

[0061] The wick structure **150***c* includes sections **1501** and **1502** having lengths Y**1** and Y**2**, respectively, and connected to each other at a same angle (greater than 0° and less than) 180° as the sections **1401** and **1402** of the wick structure **140***c*. However, in other embodiments, the lengths of the sections **1501** and **1502** are different from the lengths of the sections **1401** and **1402**. In some embodiments, the length of the section **1501** is smaller than the length of the section **1401**. In some other embodiments, the length of the section **1502** is longer than the length of the section **1402**.

[0062] The location of the wick structure is not restricted to any particular location in the vapor chamber. FIG. **6**A illustrates a plan view of a second casing **120***d* and a wick structure **140***d*, according to some embodiments. The second casing **120***d* may be used instead of the second casing **120** of FIGS. **1** and **2** in the vapor chamber **100**. The second casing **120***d* may be similar in some respects to the second casing **120***c* in FIG. **5**A, and therefore may be best understood with reference thereto where like numerals designate like components not described again in detail.

[0063] Referring to FIG. **6**A, the wick structure **140***d* has at least one bend and is disposed on the second casing **120***d*. The wick structure **140***d* is located in the gaps between the supporting structures **122** and contacts the inner surface **123** of the second casing **120***d*. One end Sd of the wick structure **140***d* is located in the second portion A**2**, and the other opposite end Ed of the wick structure **140***d* is located in the first portion A**1** and overlaps the heat source H attached to the outer surface of the first casing **110**. Assuming, for the sake of explanation, that the heat source H is the same as the heat source H in FIG. **5**A, the wick structure **140***d* overlaps the first side L**1**. As illustrated, the section having length Y**1** of the wick structure **140***d* contacts a lower horizontal edge A**22** of the second portion A**2**.

[0064] The wick structure **140***d* has a relatively shorter length that the wick structure **140***c* of FIG. **5**A. The overall length of the wick structure **140***d* is approximately 108 mm, but the disclosure is not limited thereto. In other embodiments, the overall length of the wick structure **140***d* increased or decreased as long as the wick structure **140***c* is accommodated within the vapor chamber **100**. An extent of the wick structure **140***d* may be equal to the minimum distance X between the end Sd of the wick structure **140***d* and the heat source H. More specifically, the minimum distance X is measured from the end Sd to a point on the heat source H nearest to the end Sd projected vertically on the inner surface **123**. For example, the distance X is approximately 100 mm. The heat dissipation efficiency of the vapor chamber including the wick structure **140***c* is relatively higher when the overall length of the wick structure **140***d* is equal to or less than about 120 mm.

[0065] FIG. **6**B illustrates the second casing **120***d* including the wick structure **140***d* and a wick structure **150***d*, according to embodiments of the disclosure. The wick structure **150***d* is shaped and sized (or otherwise configured) similar to the wick structure **140***d*. The wick structure **150***d* contacts the wick structure **140***d* at the top side thereof. The wick structure **150***d* is located in the gaps between the supporting structures **122** and contacts the inner surface **123** of the second casing **120***d*.

[0066] An end **165** of the wick structure **150***d* is located in the second portion A**2** and is spaced from the edge A**21** of the second portion A**2** and the opposite end **167** of the wick structure **150***d* is located in the first portion A**1** and overlaps at least part of the heat source H (illustrated in phantom) attached to the outer surface of the first casing **110**. As depicted, the ends **165** and **167** of the wick structure **150***d* are aligned with the ends Sd and Ed of the wick structure **140***d*.

[0067] In some embodiments, the wick structure **150***d* overlaps a same side of the heat source H as overlapped by the wick structure **140***d*. In other embodiments, the wick structure **150***d* overlaps a different side of the heat source H. The extent of the wick structure **150***d* is the same as the extent of the wick structure **140***d*.

[0068] The wick structure **150***d* sections **1501** and **1502** having lengths Y**1** and Y**2**, respectively, and connected to each other at a same angle (greater than 0° and less than 180°) as the sections **1401** and **1402** of the wick structure **140***d*. However, in other embodiments, the lengths of the sections **1501** and **1502** are different from the lengths of the sections **1401** and **1402**. In some embodiments, the length of the section **1501** is smaller than the length of the section **1401**. In some other embodiments, the length of the section **1502** is longer than the length of the section **1402**.

[0069] Referring to FIGS. **5**A and **6**, the wick structure **140***d* in FIG. **6** is shorter than the wick structure **140***c* in FIG. **5**A, and this reduces the path for the cooling liquid to circulate in the vapor chamber **100**. The length of the wick structure **140***d* is not limited to any particular length and may be adjusted according to user and design requirements.

[0070] According to some embodiments, the shapes of the first casing and the second casing are not limited to any particular shape. FIG. **7**A illustrates a plan view of a second casing **120***e* including two wick structures **141***e* and **142***e*, according to embodiments of the disclosure. The second casing **120***e* may be used in a vapor chamber that includes a first casing and a sheet-like wick structure similar to the first casing **110** and the sheet-like wick structure **130** in FIG. **1**, respectively, but each having a shape corresponding to the shape of the second casing **120***e*.

[0071] As illustrated in FIG. **7**A, the second casing **120***e* is generally H-shaped and has a first portion A**1**, a second portion A**2**, and a third portion A**3**. The third portion A**3** is located between the first and second sections A**1** and A**2**. The first portion A**1** has a width W**1**, the second portion A**2** has a width W**2**, and the third portion A**3** has a width W**3**. The width W**1** is equal to the width W**2**, and the width W**3** is smaller than the width W**1**. However, in other embodiments the widths W**1** and W**2** may be different, but each greater than the width W**3**. The wick structures **141***e* and **142***e* are

disposed on the second casing **120***e*. The wick structures **141***e* and **142***e* each have a generally L-shape and are located in the gaps between the supporting structures **122** and each contacts the inner surface **123** of the second casing **120***e*.

[0072] The wick structure **141***e* includes a first section **151** that is disposed in the first portion A**1**, second portion A**2**, and third portion A**3**. The wick structure **141***e* includes a second section **152** disposed in the third portion A**3** and at an angle relative to the first section **151**. The first section **151** is connected to the second section **152** in the third portion A**3**. In an example, the first section **151** is perpendicular to the second section **152**. However, embodiments are not limited thereto, and the first section **151** is connected to the second section **152** at angles greater than or less than 90°.

[0073] The wick structure **142***e* includes a first section **153** that is disposed in the first portion A**1**, second portion A**2**, and third portion A**3**. The wick structure **142***e* includes a second section **154** disposed in the third portion A**3** and at an angle relative to the first section **153**. The first section **153** is connected to the second section **154** in the third portion A**3**. In an example, the first section **153** is perpendicular to the second section **154**. However, embodiments are not limited thereto, and the first section **153** is connected to the second section **154** at angles greater than or less than 90°. The first section **151** of the wick structure **141***e* and the first section **153** of the wick structure **141***e* contact each other.

[0074] The first section **151** includes an end Eel of the wick structure **141***e* in the first portion A**1**. The end Ee**1** overlaps the heat source H attached to the outer surface of the first casing **110**. The first section **153** includes an end Ee**2** of the wick structure **142***e* in the first portion A**1**. The end Ee**2** overlaps the heat source H attached to the outer surface of the first casing **110**.

[0075] The second section **152** includes an end Se**1** of the wick structure **141***e* in the third portion A**3**. The second section **154** includes an end Se**2** of the wick structure **142***e* in the third portion A**3**.

[0076] As illustrated, the end Se**1** of the wick structure **141***e* is located proximate (non-contacting) an upper edge A**22** of the second portion A**2** and the end Se**2** of the wick structure **142***e* is located proximate a lower edge A**23** of the second portion A**2** opposite the upper edge A**22**. The second sections **152** and **154** are disposed proximate the edge A**21** of the second portion A**2**. The edge A**21** connects the upper edge A**22** and lower edge A**23**. In other embodiments, the end Se**1** may contact the upper edge A**22**, the end Se**2** may contact the lower edge A**23**, and the second sections **152** and **154** contact the edge A**21**.

[0077] Instead of two wick structures **141***e* and **142***e*, some embodiments include a single wick structure. FIG. **7**B illustrates a plan view of the second casing **120***e* including a single wick structure **170**, according to embodiments of the disclosure. The wick structure **170** includes a first section **171** disposed in the first portion A**1**, second portion A**2**, and third portion A**3**. The wick structure **170** includes a second section **172** disposed in the third portion A**3** and at an angle relative to the first section **171**. The first section **171** is connected to the second section **172** in the third portion A**3**. In an example, the first section **171** is perpendicular to the second section **172**. However, embodiments are not limited thereto, and the first section **171** is connected to the second section **172** at angles greater than 0° or less than 90°.

[0078] The first section **171** includes an end Eel of the wick structure **170** in the first portion A**1**. The end Ee**1** overlaps the heat source H attached to the outer surface of the first casing **110**. The second section **172** includes an end Se**1** of the wick structure **170** in the third portion A**3**. The second section **172** includes an end Se**2** opposite end Se**1** located in the third portion A**3**. The second section **172** is disposed proximate the edge A**21** of the second portion A**2**.

[0079] FIG. **8**A illustrates a plan view of a second casing **120***f* including two wick structures **141***f* and **142***f*, according to embodiments of the disclosure. The second casing **120***f* may be used in a vapor chamber that includes a first casing and a sheet-like wick structure similar to the first casing **110** and the sheet-like wick structure **130** in FIG. **1**, respectively, but each having a shape corresponding to the shape of the second casing **120***f*.

[0080] The second casing **120***f* includes a first portion A**1** disposed between a second portion A**2** and a third portion A**3**. The first portion A**1** has a width W**1**, and the second portion A**2** and the third portion A**3** each have a width W**2**. The width W**1** is larger than the width W**2**. In other embodiments, the second portion A**2** and the third portion A**3** may have different widths, but smaller than the width W**1**. The wick structures **141***f* and **142***f* are disposed on the second casing **120***f*. The wick structures **141***f* and **142***f* each have a generally L-shape and are located in the gaps between the supporting structures **122** and each contacts the inner surface **123** of the second casing **120***f*.

[0081] The wick structure **141***f* includes a first section **161** that is disposed in the first portion A**1**. The wick structure **141***f* includes a second section **162** disposed in the first portion A**1** and the second portion A**2** and at an angle relative to the first section **161**. The first section **161** is connected to the second section **162** in the first portion A**1**. In an example, the first section **161** is perpendicular to the second section **162**. However, embodiments are not limited thereto, and the first section **161** is connected to the second section **162** at angles greater than or less than 90°.

[0082] The wick structure **142***f* includes a first section **163** that is disposed in the first portion A**1**. The wick structure **142***f* includes a second section **164** disposed in the third portion A**3** and at an angle relative to the first section **163**. The first section **163** is connected to the second section **164** in the first portion A**1**. In an example, the first section **163** is perpendicular to the second section **164**. However, embodiments are not limited thereto, and the first section **163** is connected to the second section **164** at angles greater than or less than 90°. The first section **161** of the wick structure **141***f* and the first section **163** of the wick structure **142***f* contact each other.

[0083] The first section **161** includes an end Ef**1** of the wick structure **141***f* located in the first portion A**1**. The end Ef**1** overlaps the heat source H attached to the outer surface of the first casing **110**. The first section **163** includes an end Ef**2** of the wick structure **142***f* in the first portion A**1**. The end Ef**2** overlaps the heat source H attached to the outer surface of the first casing **110**.

[0084] The second section **162** includes an end Sf**1** of the wick structure **141***f* in the second portion A**2**. The second section **164** includes an end Sf**2** of the wick structure **142***f* in the third portion A**3**.

[0085] As illustrated, the end Sf**1** of the wick structure **141***f* is located proximate an edge A**32** of the second portion A**2** and the end Sf**2** of the wick structure **142***f* is located proximate (non-contacting) an edge A**33** of the third portion A**3** opposite the edge A**32**. The second sections **162** and **164**

are disposed proximate (but not contacting) an edge A**31** of the second casing **120***f* that forms (or otherwise defines) the first portion A**1**, the second portion A**2**, and the third portion A**3** of the second casing **120***f*. The edge A**31** connects the edge A**32** and edge A**33**. In other embodiments, the end Sf**1** may contact the edge A**32**, the end Sf**2** may contact the edge A**33**, and the second sections **162** and **164** contact the edge A**31**.

[0086] When the vapor chamber is used in a vertical manner (e.g., in a position wherein the heat source H is located at a level higher than the second portion A**2** and third portion A**3**), the cooling fluid in the vapor chamber evaporates and turns to vapor while absorbing the heat generated by the heat source H. The cooling fluid (in vapor state) flows toward the second portion A**2** and the third portion A**3** and turns back to liquid state, and the cooling fluid can flow to the first portion A**1** via the wick structures **141***f* and **142***f*. This configuration decreases a temperature difference between the first portion A**1** and the second portion A**2** and the third portion A**3** by around 4 to 15 degrees Celsius. The cooling fluid continuously circulates between the first portion A**1** and the second portion A**2** and the third portion A**3**, thereby dissipating the heat generated by the heat source H.

[0087] FIG. **8**B illustrates a plan view of a second casing **120***g* including a wick structure **142***f*, according to some embodiments. FIG. **8**C illustrates a cross-sectional view of the second casing **120***g* taken along line **8**B-**8**B in FIG. **8**B. The second casing **120***g* may be similar in some respects to the second casing **120***f* in FIG. **8**A, and therefore may be best understood with reference thereto where like numerals designate like components not described again in detail.

[0088] As illustrated in FIG. **8**B, the second casing **120***g* includes a single wick structure **142***f*. The wick structure **141***f* is absent. The wick structure **142***f* is spaced from the edge A**31**. In some embodiments, the second section **164** is disposed mid-way in the third portion A**3**. In some embodiments, and as illustrated, the first section **163** of the wick structure **142***f* is centrally located in the first portion A**1**. However, embodiments are not limited in this regard and in some other embodiments, the first section **163** is located offset from the center of the first portion A**1**.

[0089] In some embodiments, the second casing **120***g* includes the wick structure **141***f* (FIG. **8**A) and the wick structure **142***f* is absent. The wick structure **141***f* is spaced from the edge A**31**. In some embodiments, the second section **162** of the wick structure **141***f* is disposed mid-way in the second portion A**2**. In some embodiments, the first section **161** (FIG. **8**A) of the wick structure **141***f* is centrally located in the first portion A**1**. However, in some other embodiments, the first section **161** is located offset from the center of the first portion A**1**.

[0090] Instead of two wick structures **141***f* and **142***f*, some embodiments include a single wick structure. FIG. **8**D illustrates a plan view of the second casing **120***f* including a single wick structure **180**, according to embodiments of the disclosure. The wick structure **180** includes a first section **181** disposed in the first portion A**1**. The wick structure **180** includes a second section **182** disposed in the first portion A**1**, second portion A**2**, and third portion A**3** and at an angle relative to the first section **181**. The first section **181** is connected to the second section **182** in the first portion A**1**. In an example, the first section **181** is perpendicular to the second section **182**. However, embodiments are not limited thereto, and the first section **181** is connected to the second section **182** at angles greater than 0° or less than 90°.

[0091] The first section **181** includes an end Ef**1** of the wick structure **180** in the first portion A**1**. The end Ef**1** overlaps the heat source H attached to the outer surface of the first casing **110**. The second section **182** includes an end Sf**1** of the wick structure **180** in the second portion A**2** and an end Sf**2** opposite end Sf**1** located in the third portion A**3**. The second section **182** is disposed proximate (but not contacting) the edge A**31** that forms (or otherwise defines) the first portion A**1**, the second portion A**2**, and the third portion A**3** of the second casing **120***f*. Although not illustrated, a working appendage similar to the working appendage **1150** in FIG. **2**A is included in the second casing **120***f* in FIGS. **8**A, **8**B, and **8**D. The working appendage is located at any desirable location along the sides of the second casing **120***f*.

[0092] The shape of the wick structure is not limited to any particular shape. In some embodiments, the wick structure may be in a zig-zag shape or any other desired shape.

[0093] FIG. **9** illustrates a plan view of a second casing **120***h* including a wick structure **141***h*, according to embodiments of the disclosure. The second casing **120***h* may be used in a vapor chamber that includes a first casing and a sheet-like wick structure similar to the first casing **110** and the sheet-like wick structure **130** in FIG. **1**, respectively, but each having a shape corresponding to the shape of the second casing **120***h*.

[0094] As illustrated in FIG. **9**, the second casing **120***h* is generally U-shaped and has a horizontally orientated first portion A**1**, and a second portion A**2** and a third portion A**3**, each vertically oriented. The first portion A**1** is located between the second and third sections A**2** and A**3**. The first portion A**1** has a width W**1**, the second portion A**2** has a width W**2**, and the third portion A**3** has a width W**3**. The width W**2** is equal to the width W**3**, and the width W**1** is less than the widths W**2** and W**3**. However, in other embodiments the widths W**2** and W**3** may be different, but each greater than the width W**1**. The wick structures **141***h* is disposed in the second casing **120***h* and in the gaps between the supporting structures **122**. The wick structures **141***h* contacts the inner surface **123** of the second casing **120***h*.

[0095] The wick structure **141***h* includes a first section **191** horizontally oriented and disposed in the first portion A**1**, second portion A**2**, and third portion A**3**. The wick structure **141***h* includes two vertically oriented sections, a second section **192** disposed in the second portion A**3** and a third section **193** disposed in the third portion A**3**. Each of the first section **191**, second section **192**, and third section **193** are straight, longitudinal structures without any bends. The second section **192** and the third section **193** are angled relative to the first section **191**. The second section **192** and the third section **193** are connected to the first section **191** in the second portion A**2** and the third portion A**3**, respectively. In an embodiment, and as illustrated, the second section **192** and the third section **193** are perpendicular to the first section **191**. However, embodiments are not limited in this regard, and the second section **192** and the third section **193** are connected to the first section **191** at angles greater than 0° or less than 90°.

[0096] The first section **191** includes an end Sg**2** in the second portion A**2**, and proximate an outer vertical edge A**22** of the second portion A**2**. The first section **191** includes an end Sg**3** in the third portion A**3** longitudinally opposite the

end Sg**2**, and proximate an outer vertical edge A**23** of the third portion A**3**. The first section **191** is located proximate a bottom edge A**21** of the first portion A**1**, second portion A**2**, and third portion A**3**.

[0097] The second section **192** includes an end Eg**2** in the second portion A**2**. The end Eg**2** is longitudinally opposite the end of the second section **192** connected to the first section **191**. Similarly, the third section **193** includes an end Eg**3** in the third portion A**3**. The end Eg**3** is longitudinally opposite the end of the third section **193** connected to the first section **191**.

[0098] As illustrated, the end Eg**2** overlaps the heat source H attached to the outer surface of the first casing **110** and over the second portion A**2**. However, in other embodiments, the end Eg**3** overlaps the heat source H attached to the outer surface of the first casing **110** and over the third portion A**3**. A working appendage **1150** is located in the third portion A**3**. However in other embodiments, the working appendage **1150** is located in the first portion A**1** or the second portion A**2** along any desired edge.

[0099] FIG. **10**A is a cross-sectional view of a bundled wick structure including multiple wick fibers **1010** arranged around a central wick fiber **1020**. In an embodiment, the wick fibers **1010** and **1020** include copper. However, the wick fibers **1010** and/or **1020** can include other materials that facilitate the flow of condensed fluid by capillary force through the wick structure formed using the wick fibers **1010** and **1020**.

[0100] FIGS. **10**B-**10**F illustrate wick structures **140***g*, **140***h*, **140***i*, **140***j*, and **140***k* including different arrangements of the wick fibers **1010** around the central wick fiber **1020**. In FIG. **10**B, the wick structure **140***g* includes the wick fibers **1010** twisted together in the shape of a helix to form a bundle (e.g., a structure similar to a braided rope). In FIG. **10**C, the wick structure **140***h* includes the wick fibers **1010** individually twisted and then twisted together in the shape of a helix to form a bundle. In FIG. **10**D, the wick structure **140***i* includes the wick fibers **1010** longitudinally extending and arranged side by side.

[0101] In FIGS. **10**E and **10**F, the wick structures **140***j* and **140***k* are formed by twisting the wick fibers **1010** in the shape of a helix to form a bundle. Due to the difference in the angle of twist of the wires in the wick structures **140***j* and **140***k*, the two wick structures **140***j* and **140***k* have a different tensile force.

[0102] In some other embodiments, the central wick fiber **1020** is absent in the wick structures **140***g*, **140***h*, **140***i*, **140***j*, and **140***k*.

[0103] FIG. **10**G is a cross-sectional view of a bundled wick structure including a plurality of wick fibers **1030** arranged in a circular manner. In an embodiment, the wick fibers **1030** include copper. However, the wick fibers **1030** can include other materials that facilitate the flow of condensed fluid by capillary force through the wick structure formed using the wick fibers **1030**. FIG. **10**H illustrates a wick structure **140***m* in which the plurality of wick fibers **1030** are loosely twisted together. FIG. **10**J illustrates a wick structure **140***n* in which the plurality of wick fibers **1030** are longitudinally arranged. FIG. **10**K illustrates a wick structure **140***p* in which the plurality of wick fibers **1030** are twisted together or in pairs to form a braided structure. In some other embodiments, the wick fibers **1010**, **1020**, and/or **1030** are flattened.

[0104] FIG. **11** illustrates a front perspective view of a vapor chamber **100***i*, according to embodiments of the disclosure. FIG. **12** illustrates an exploded view of the vapor chamber **100***i*, according to embodiments of the disclosure. FIG. **13** illustrates a plan view of a second casing **120***i* of the vapor chamber **100***i* in FIG. **11** including two wick structures, according to embodiments of the disclosure. FIG. **14** illustrates a plan view of a first casing **110***i* of the vapor chamber **100***i* in FIG. **11** including a sheet-like wick structure **130***i*, according to embodiments of the disclosure. The vapor chamber **100***i* also includes the working appendage **1150** (FIG. **2**A) cooperatively formed by the first casing **110***i* and the second casing **120***i*.

[0105] Referring to FIGS. **11** and **12**, the vapor chamber **100***i* includes a first casing **110***i* contacting a second casing **120***i*. As illustrated in FIGS. **11**-**14**, the first casing **110***i* includes a first inner surface **183** and a first outer surface **185**, and a mounting area **184** defined on the first outer surface **185**. The first inner surface **183** is opposite to the first outer surface **185**. The first outer surface **185** includes and forms part of the outer surface of the vapor chamber **100***i* and is substantially planar except for the mounting area **184**. In some embodiments, the mounting area **184** is a raised (step) portion on the first outer surface **185**. A first heat source H**1** is thermally attached (or mounted) to the mounting area **184** and thereby to the outer surface of the vapor chamber **100***i* using a thermal paste or other techniques. The heat source H**1** is not limited to any particular type of heat source H**1** and can include heat sources such as electronic circuits (CPUs). Similarly, the shape and size of the mounting area **184** are not limited to any particular shape and size, and the mounting area **184** can have any desired shape and size on which the first heat source H**1** can be correctly attached and from which the generated heat can be effectively dissipated. In addition, the location of the mounting area **184** is not limited to any particular location on the first outer surface **185**, and the mounting area **184** can be located anywhere on the first outer surface **185** as long as the first heat source H**1** can be correctly attached to the mounting area **184** and the first heat source H**1** can effectively dissipate heat.

[0106] As illustrated in FIGS. **12** and **14**, the sheet-like wick structure **130***i* is a generally planar, wing-shape structure extending along a length direction (X-direction in FIG. **11**) of the vapor chamber **100***i*. The sheet-like wick structure **130***i* may be similar in some respects to the sheet-like wick structure **130** in FIG. **1**, and therefore may be understood with reference thereto where like components are not described again in detail. The sheet-like wick structure **130***i* includes a first (or central) portion **85** including a first part B**1***a* and a second part B**1***b* adjacent and directly connected to the first part B**1***a* in the length direction. The sheet-like wick structure **130***i* further includes a second portion B**2** and a third portion B**3**, which form the opposite ends of the sheet-like wick structure **130***i* in the length direction. The first part B**1***a* and the second part B**1***b* are located between the second portion B**2** and the third portion B**3**. As illustrated, the first part B**1***a* is directly connected to the second portion B**2** in the length direction and the second part B**1***b* is directly connected to the third portion B**3** in the length direction. Widths W**2** of the second portion B**2** and of the third portion B**3** are about the same (or within a certain range of each other (for example, +/−1-5 mm)). Widths W**1** of the first part B**1***a* of the second part B**1***b* are about the same (or

within a certain range of each other (for example, +/−1-5 mm)). In some embodiments, the widths W**2** of the second portion B**2** and the third portion B**3** are less than the widths W**1** of the first part B**1***a* and the second part B**1***b*. In some other embodiments, the second portion B**2** and the third portion B**3** have different widths, and the first part B**1***a* and second part B**1***b* have different widths. However, even when the widths are different, the widths of the second portion B**2** and the third portion B**3** are smaller than the widths of the first part B**1***a* and second part B**1***b*.

[0107] The thermal resistances of the second portion B**2** and the third portion B**3** are about the same (or within a certain value of each other), and the thermal resistances of the first part B**1***a* and second part B**1***b* are about the same (or within a certain value of each other). In some embodiments, the thermal resistances of the second portion B**2** and the third portion B**3** are greater than the thermal resistances of the first part B**1***a* and second part B**1***b*. In other embodiments, the second portion B**2** and the third portion B**3** have different thermal resistances, and the first part B**1***a* and second part B**1***b* have different thermal resistances. However, even when the thermal resistances are different, the thermal resistances of the second portion B**2** and the third portion B**3** are greater than the thermal resistances of the first part B**1***a* and second part B**1***b*. Thus, the heat transfer performance (or ability) of the first part B**1***a* and second part B**1***b* is higher than the heat transfer performance of the second portion B**2** and the third portion B**3**. In some embodiments, the thermal resistances of the second portion B**2** and the third portion B**3** are about the same (or within a certain value of each other), the thermal resistance of the first part B**1***a* is less than the thermal resistances of the second portion B**2** and the third portion B**3**, and the thermal resistance of the second part B**1***b* is less than the thermal resistance of the first part B**1***a*. Additionally, in other embodiments, the thermal resistance of the second part B**1***b* is greater than the thermal resistance of the mounting area **184**. Since the second part B**1***b* is in thermal contact with the first heat source H**1** attached to the mounting area **184**, dissipation of heat generated from heat sources such as graphic processing units (GPUs) or central processing units (CPUs) is improved. It should be noted that, for the purposes of discussion herein, two parameters or quantities are considered to have a same value or a similar value when they have the same value or when a difference between their individual values is within an acceptable range, for example, +/−1-5 units of measurement.

[0108] As illustrated in FIG. **13**, the second casing **120***i* includes a second inner surface **283** and a second outer surface **285**, and a second mounting area **284**. The second inner surface **283** is opposite to the second outer surface **285**. The second outer surface **285** includes and forms at least some of the outer surface of the vapor chamber **100***i* and is substantially planar. A second heat source H**2** is attached in the second mounting area **284** to the outer surface of the vapor chamber **100***i* using a thermal paste, or other techniques. The second heat source H**2** is illustrated as square shaped for the sake of illustration. It will be understood that the second heat source H**2** is not limited to any particular shape and the second heat source H**2** can have any desired shape.

[0109] The second casing **120***i* further includes an inner wick structure **140***i*, illustrated as being arranged in the second casing **120***i*. The inner wick structure **140***i* is a generally planar, wing-shape structure extending along a length direction (X-direction in FIG. **13**) of the vapor chamber **100***i*. The inner wick structure **140***i* may be similar in some respects to the sheet-like wick structure **130***i* in FIG. **12**, and therefore may be understood with reference thereto where like components are not described again in detail. The wick structure **140***i* includes a first (or central) portion **95** including a first part A**1***a* and a second part A**1***b* adjacent to and directly connected to the first part A**1***a* in the length direction. The wick structure **140***i* further includes a second portion A**2** and a third portion A**3**, which form the opposite ends of the wick structure **140***i* in the length direction. The first part A**1***a* and second part A*b* are disposed between the second portion A**2** and third portion A**3**. As illustrated, the first part A**1***a* is directly connected to the second portion A**2** in the length direction and the second part A**1***b* is directly connected to the third portion A**3** in the length direction. The first part A**1***a* and second part A**1***b* have a width W**1**, and the second portion A**2** and the third portion A**3** each have a width W**2**. Widths W**2** of the second portion A**2** and the third portion A**3** are about the same (or within a certain predetermined range/tolerance of each other (for example, +/−1-5 mm)) and the widths W**2** of the first part A**1***a* and second part A**1***b* are about the same (or within a certain predetermined range/tolerance of each other (for example, +/−1-5 mm)). The widths W**2** of the second portion A**2** and the third portion A**3** are less than the widths W**1** of the first part A**1***a* and second part A**1***b*. In other embodiments, the second portion A**2** and the third portion A**3** may have different widths, and the first part A**1***a* and second part A**1***b* may have different widths. However, even when the widths are different, the widths W**2** of the second portion A**2** and the third portion A**3** are smaller than the widths W**1** of the first part A**1***a* and second part A**1***b*.

[0110] A second heat source H**2** is attached to the outer surface of the second casing **120***i* and thereby the outer surface of the vapor chamber **100***i* using a thermal paste, or other techniques. The second heat source H**2** is illustrated as square shaped for the sake of illustration. It will be understood that the shape of the second heat source H**2** is not limited to a square shape and the second heat source H**2** can have any desired shaped. In some embodiments, the thermal resistances of the second portion A**2** and the third portion A**3** are about the same (or within a certain value of each other, for example, +/−5 K/W of each other) and the thermal resistances of the first part A**1***a* and second part A**1***b* are about the same (or within a certain value of each other). In some embodiments, the thermal resistances of the second portion A**2** and the third portion A**3** are greater than the thermal resistances of the first part A**1***a* and second part A**1***b*. In other embodiments, the second portion A**2** and the third portion A**3** have different thermal resistances, and the first part A**1***a* and second part A**1***b* have different thermal resistances. However, even if the thermal resistances are different, the thermal resistances of the second portion A**2** and the third portion A**3** are greater than the thermal resistances of the first part A**1***a* and second part A**1***b*. Thus, the heat transfer performance (or ability) of the first part A**1***a* and second part A**1***b* is higher than the heat transfer performance (or ability) of the second portion A**2** and the third portion A**3**. In some embodiments, the thermal resistances of the second portion A**2** and the third portion A**3** are about the same (or within a certain value of each other), the thermal resistance of the first part A**1***a* is greater than the thermal resistances of

the second portion A**2** and the third portion A**3**, and the thermal resistance of the second part A**1***b* is greater than the thermal resistance of the first part A**1***a*. Thus, the second part A**1***b* that is in thermal contact with the second heat source H**2** attached to the outer surface of the second casing **120***i* provides an improved heat transfer performance of heat generated from heat sources such as graphic processing units (GPUs) or central processing units (CPUs).

[0111] In some embodiments, the heat transfer performance of the second part B**1***b* in thermal contact with the first heat source H**1** attached to the outer surface of the first casing **110***i* is higher than the heat transfer performance of the second part A**1***b* in thermal contact with the second heat source H**2** attached to the outer surface of the second casing **120***i*. In some embodiments, the heat transfer performance of the second part B**1***b* in thermal contact with the first heat source H**1** attached to the outer surface of the mounting area **184** is about the same to the heat transfer performance of the second part A**1***b* in thermal contact with the second heat source H**2** attached to the outer surface of the second casing **120***i*.

[0112] In some embodiments, the sheet-like wick structure **130***i* of the first casing **110***i* and inner wick structure **140***i* of the second casing **120***i* are copper mesh wick structures, or other types of wick structures. In some embodiments, the thermal resistances of the first part A**1***a*, second part A**1***b*, second portion A**2**, and third portion A**3** are similar to the thermal resistances of the first part B**1***a*, second part B**1***b*, second portion B**2**, and third portion B**3**, respectively. In some embodiments, the thermal resistances of the first part A**1***a*, second part A**1***b*, second portion A**2**, and third portion A**3** are different than the thermal resistances of the first part B**1***a*, second part B**1***b*, second portion B**2**, and third portion B**3**, respectively. The thermal resistances can have any desired value as required by application or design provided the heat transfer performance of the second part B**1***b* (that is in thermal contact with the first heat source H**1**) is higher than or equal to the heat transfer performance of the second part A**1***b* (that is in thermal contact with the second heat source H**2**).

[0113] As illustrated in FIG. **12**, the vapor chamber **100***i* includes a plurality of supporting structures **122** for supporting the first casing **110***i* and the second casing **120***i* and reducing buckling of the casings **110***i* and **120***i*. As a result, deformation of the vapor chamber **100***i* is reduced. In some embodiments, the supporting structures **122** are shaped as columns or pillars having a diameter greater than 0.4 mm but less than 50 mm, and height (or thickness) greater than 0.1 mm but less than 30 mm. However, embodiments are not limited in this regard. Other shapes and sizes are also possible provided the plurality of supporting structures **122** provide the required support to limit buckling of the first casing **110***i* and second casing **120***i*. In some embodiments, a copper sintered powdered wick layer **124** surrounds some of the supporting structures **122**. In some embodiments, the copper sintered powdered wick layer **124** may be include, for example, oxygen-free copper, silicon-containing copper alloy, aluminum-containing copper alloy, a combination thereof, and the like. In other embodiments, the copper sintered powdered wick layer **124** includes porous wick structures. In some embodiments, the copper sintered powdered wick layer **124** surrounds the supporting structures **122** located in the first part A**1***a* and second part A**1***b* and corresponding first part B**1***a* and second part B**1***b*. However, in other embodiments, the copper sintered powdered wick layer **124** surrounds all supporting structures **122**.

[0114] The supporting structures **122** surrounded by the copper sintered powdered wick layer **124** reduce the thermal resistance of the first part A**1***a* and second part A**1***b* having the second heat source H**2** attached to the outer surface of the second casing **1201** and corresponding first part B**1***a* and second part B**1***b* having the first heat source H**1** attached to the outer surface of the first casing **110***i*. As a result, the heat transfer performance is improved. In some embodiments, only some of the supporting structures **122** located in the first part A**1***a* and second part A**1***b* and the first part B**1***a* and second part B**1***b* are surrounded with the copper sintered powdered wick layer **124**. In some embodiments, all the supporting structures **122** located in the first part A**1***a* and second part A**1***b* and corresponding first part B**1***a* and second part B**1***b* include the copper sintered powdered wick layer **124**. The supporting structures **122** having the copper sintered powdered wick layer **124** reduce the thermal resistance of the first part A**1***a* and the second part A**1***b* having the second heat source H**2** attached to the second casing **120***i* and the first part B**1***a* and the second part B**1***b* having the first heat source H**1** attached to the first casing **110***i*, and thereby the heat transfer performance is improved.

[0115] Referring to FIGS. **12** and **13**, illustrated are wick structures **141***k* and **142***k* disposed between the sheet-like wick structure **130***i* and the inner wick structure **140***i*, and each contacting contact the sheet-like wick structure **130***i* and the inner wick structure **140***i*. The wick structures **141***k* and **142***k* each have a generally serpentine shape (e.g., including multiple curves or turns) and are located in the gaps between the supporting structures **122**.

[0116] The wick structure **141***k* includes a first section **111** that is disposed in the first part A**1***a*. The wick structure **141***k* includes a second section **112** disposed in the second portion A**2** and is inclined relative to the first section **111**. In some embodiments, the second section **112** is inclined at an angle greater than the ideal horizontal (0°) and less than the ideal vertical (90°). The first section **111** is connected to the second section **112** at the connection between the first part A**1***a* and second portion A**2**. However, embodiments are not limited thereto, and the first section **111** can be inclined relative to the second section **112** at angles or degrees of curvatures greater than or less than 45°.

[0117] The wick structure **142***k* includes a first section **113** that is disposed in the first part A**1***a* and the second part A**1***b*. The wick structure **142***k* includes a second section **114** disposed in the third portion A**3** and is inclined relative to the first section **113**. In some embodiments, the second section **114** is inclined at an angle greater than the ideal horizontal (0°) and less than the ideal vertical (90°). The first section **113** is connected to the second section **114** at the connection between the second part A**1***b* and third portion A**3**. However, embodiments are not limited thereto, and the second section **114** can be inclined relative to the second section **114** at angles or degrees of curvatures greater than or less than 45°. The first section **111** of the wick structure **141***k* and the first section **113** of the wick structure **142***k* do not contact each other.

[0118] In some embodiments, both wick structures **141***k* and **142***k* overlap the heat source H**2** located on the outer surface of the casing **120***i*. In some embodiments, the wick structures **141***k* and **142***k* overlap the heat source H**2** via different sides (edges) of the heat source H**2**. In other

embodiments, the wick structure **142***k* overlaps both heat sources H**1** and H**2**, and overlaps two or more sides (edges) of the heat source H**1**.

[0119] Referring to FIG. **13**, the first section **111** includes an end E**1** of the wick structure **141***k*. The end E**1** overlaps the heat source H**2** attached to the first casing **110***i*. The first section **113** includes an end E**2** of the wick structure **142***k*. The end E**2** overlaps the heat source H**2** attached to the first casing **110***i*. The wick structure **142***k* overlaps the heat source H**1** attached to the outer surface of the second casing **120***i*.

[0120] The second section **112** includes an end SI of the wick structure **141***k*. The second section **114** includes an end S**2** of the wick structure **142***k*. In an example, the first and second heat sources H**1**, H**2**, are attached to the outer surfaces of the mounting area **184** of the first casing **110***k* and second casing **120***k*, in first part A**1***a* and the second part A**1***b*, respectively. The thermal resistance of the second part A**1***b* is lower than the thermal resistance of the first part A**1***a*. The thermal resistance of the first part A**1***a* is lower than the thermal resistances of the second portion A**2** and third portion A**3**. The heat transfer performance of the second part B**1***b* in thermal contact with the first heat source H**1** attached to the outer surface of the mounting area **184** is higher than the heat transfer performance of the second part A**1***b* in thermal contact with the second heat source H**2** attached to the outer surface of the second casing **120***k*.

[0121] As illustrated, the end S**1** of the wick structure **141***k* is located proximate (non-contacting) an edge A**32** of the second portion A**2** and the end S**2** of the wick structure **142***k* is located proximate (non-contacting) an edge A**33** of the third portion A**3** opposite the edge A**32**. The second sections **112** and **114** are disposed proximate (non-contacting) an edge A**31** of the second casing **120***i* that forms (or otherwise defines) the first part A**1***a*, the second part A**1***b*, the second portion A**2**, and the third portion A**3** of the second casing **120***k*. Referring to FIG. **13**, the edge A**31** forms the lower edge of the second casing **120***i* and connects the edge A**32** and edge A**33**. In other embodiments, the end S**1** may contact the edge A**32** and the end S**2** may contact the edge A**33**. In yet other embodiments, the second sections **112** and **114** contact the edge A**32**.

[0122] As illustrated, the end E**1** of the wick structure **141***k* and the end E**2** of the wick structure **142***k* are separated (non-contacting) from the edge A**31**. The end E**2** of the wick structure **142***k* is located closer to the edge A**31** than the end E**1** of the wick structure **141***k* and the first sections **111** and **113** (and thereby the ends E**1** and E**2**) are separated from each other either vertically (as illustrated) or horizontally. In other embodiments, the end E**2** of the wick structure **142***k* is closer in proximity to the edge A**31** than the end E**1** of the wick structure **141***k*. In some embodiments, the ends E**1** and E**2** cross each other in the vertical plane, for example, the YZ plane in FIG. **13** and the ends E**1** and E**2** are vertically separated from each other and overlapping in the horizontal plane, for example, the XY plane in FIG. **13**. However, in other embodiments, the ends E**1** and E**2** contact each other in the vertical plane, for example, the YZ plane in FIG. **13**, and, in the horizontal plane, for example, the XY plane, the ends E**1** and E**2** are either offset from each other or are aligned with each other. The first heat source H**1** attached to the outer surface of the mounting area **184** of the first casing **110***i* is overlapped by the wick structure **142**K, and both the wick structure **141***k* and the wick structure **142***k* overlaps the second heat source H**2** attached to the outer surface of the second casing **120***k*. In some embodiments, the heat source H**2** has a relatively higher power consumption than heat source H**1**. In some embodiments, the ends E**1** and E**2** of the wick structures **141***k* and **142***k* are located within the boundaries (edges) of the second heat source H**2**.

[0123] It will be understood that the location of the mounting area **184** may be varied depending on the application and design requirements, as long as the first heat source H**1** attached to the outer surface of the mounting area **184** of the first casing **110***i* is overlapped by the wick structure **142***k*.

[0124] The wick structures **141***k* and **142***k* decrease a distance the cooling fluid has to circulate in the vapor chamber. The length of the wick structures **141***k* and **142***k* are not limited to any particular length and may be adjusted according to user and design requirements.

[0125] When the vapor chamber is used in a vertical manner (e.g., in a position wherein the first heat source Hl and/or second heat source H**2** are (is) located at a level higher than the second portion A**2** and third portion A**3**), the cooling fluid in the vapor chamber evaporates and turns to vapor while absorbing the heat generated by the first and/or second heat sources H**1** and/or H**2**, respectively. The thermal resistance of the second part A**1***b* is lower than the thermal resistance of the first part A**1***a*. The thermal resistance of the first part A**1***a* is lower than the thermal resistances of the second portion A**2** and third portion A**3**. The heat transfer performance of the second part B**1***b* in thermal contact with the first heat source H**1** attached to the outer surface of the mounting area **184** is higher than the heat transfer performance of the second part A**1***b* in thermal contact with the second heat source H**2** attached to the outer surface of the second casing **120***i*.

[0126] In some embodiments, the thermal resistance of the second part B**1***b* is higher than the thermal resistance of the mounting area **184**. In some embodiments, the supporting structures **122** having the copper sintered powdered wick layer **124** surrounding the supporting structures **122** within the first part A**1***a* and second part A**1***b*, further reduces the thermal resistance of the first part A**1***a* and second part A**1***b* having the first heat source H**1** attached to the outer surface of the mounting area **184** of the first casing **110***k* and second heat source H**2** attached to the outer surface of the second casing **120***i*, further improving the heat transfer performance. The cooling fluid (in vapor state) flows toward the second portion A**2** and the third portion A**3** and turns back to liquid state, and the cooling fluid can flow to the first part A**1***a* and second part A**1***b* via the wick structures **141***k* and **142***k*. This configuration of the wick structures **141***k* and **142***k*, the portions of different thermal portions, and the copper sintered powered wick layers surrounding the supporting structures, decreases a temperature difference between the first part A**1***a* and second part A**1***b* and the second portion A**2** and the third portion A**3** by around 15 degrees Celsius or higher. The cooling fluid continuously circulates between the first part A**1***a* and second part A**1***b* and second portion A**2** and third portion A**3**, thereby dissipating the heat generated by the first and/or second heat sources H**1** and H**2**.

[0127] Compared to the embodiment of FIG. **8**A, the wick structures **141***k* and **142***k* each have a generally flowing, sloping-ramped-shape and do not contact each other. Portions of the sheet-like wick structure **130***i* contacting the first

casing **110***i* may have different thermal resistances. An inner wick structure **140***i* of the second casing **120***i* is included, also having different and corresponding thermal resistances to the sheet-like wick structure **130***i*. In some embodiments, the thermal resistances of the first part A**1***a*, second part A**1***b*, second portion A**2**, and third portion A**3** of the second casing **120***k* are similar to the thermal resistances of the first part B**1***a*, second part B**1***b*, second portion B**2**, and third portion B**3** of the sheet-like wick structure **130***k*, respectively. The thermal resistances of the first part A**1***a*, second part A**1***b*, second portion A**2**, and third portion A**3** and first part B**1***a*, second part B**1***b*, second portion B**2**, and third portion B**3** can be varied as required by application and design. A mounting area **184** includes a thickness and the mounting area **184** has a lower thermal resistance than that of the second part B**1***b*, first part B**1***a*, second portion B**2**, and third portion B**3**, respectively. A high temperature heat source, such as a processor (CPU, GPU, and the like) may be attached to the outer surface of the mounting area **184** of the first casing **110***i*. The thermal resistance of the second part A**1***b* is lower than the first part A**1***a*, and the thermal resistance of the first part A**1***a* is lower than the thermal resistances of the second portion A**2** and third portion A**3**, respectively. An additional heat source, such as a CPU may be attached to the outer surface of the second casing **120***i* opposite the first part A**1***a*.

[0128] The wick structures **141***k* and **142***k*, portions of different thermal resistances, and the copper sintered powered wick layers surrounding the supporting structures **122**, further improves circulation of cooling fluid in the vapor chamber **100***i*, for example, against gravity. Thus, the efficiency of the vapor chamber in dissipating heat is further improved.

[0129] In the embodiments above, the first part A**1***a* and second part A**1***b* of the inner wick structure **140***i* and corresponding first part B**1***a* and second part B**1***b* of the sheet-like wick structure **130***i* are disclosed as separate components positioned adjacent side by side each other. However, in other embodiments, a wick structure is arranged within another wick structure.

[0130] FIG. **15** illustrates a plan view of a second casing **120***i* including two wick structures, according to embodiments of the disclosure. FIG. **16** illustrates a plan view of a first casing including a sheet-like wick structure according to embodiments of the disclosure. The second casing **120***i* having an inner wick structure **140***i* may be used in the vapor chamber **100***i* that includes a first casing **110***i* and a sheet-like wick structure **130***i*.

[0131] As illustrated in FIG. **15**, the second casing **120***i* having the inner wick structure **140***i*, is generally wing-shape including a first part A**1***c*, a second part A**1***d* positioned within the first part A**1***c*, a second portion A**2**, and a third portion A**3**, wherein the first part A**1***c* and second part A**1***d* are positioned between the second portion A**2** and third portion A**3**. The first part A**1***c* has a width W**1**, the second part A**1***d* has a width W**3**, and the second portion A**2** and the third portion A**3** each have a width W**2**. In some embodiments, the widths W**2** of the second portion A**2** and the third portion A**3** are about the same, and the widths W**2**, W**3** of the first part A**1***c* and second part A**1***d* are different. In some embodiments, the widths W**2** of the second portion A**2** and the third portion A**3** are smaller than the widths W**1**, W**3** of the first part A**1***c* and second part A**1***d*. In other embodiments, the second portion A**2** and the third portion A**3** have different widths and the first part A**1***c* and second part A**1***d* may have different widths, but the widths W**2** of the second portion A**2** and the third portion A**3** are smaller than the widths W**1**, W**3** of the first part A**1***c* and second part A**1***d*. As illustrated, the first part A**1***c* completely surrounds the second part A**1***d*. In other words, the second part A**1***d* is located entirely within the first part A**1***c*.

[0132] As illustrated in FIG. **16**, the sheet-like wick structure **130***i* is generally wing-shaped including a first part B**1***c*, a second part B**1***d* within the first part B**1***c*, a second portion B**2**, and a third portion B**3**, wherein the first part B**1***c* and second part B**1***d* are positioned between the second portion B**2** and third portion B**3**. As illustrated, the first part B**1***c* completely surrounds the second part B**1***d*. In other words, the second part B**1***d* is located entirely within the first part B**1***c*. In some embodiments, the widths of the second portion B**2** and the third portion B**3** are about the same and the widths of the first part B**1***c* and second part B**1***d* are different. In some embodiments, the widths of the second portion B**2** and the third portion B**3** are smaller than the width of the second part B**1***d*, and the width of the second part B**1** is smaller than the width of the first part B**1***c*. In other embodiments, the second portion B**2** and the third portion B**3** have different widths, and the first part B**1***c* and second part B**1***d* have different widths, but the widths of the second portion B**2** and the third portion B**3** are smaller than the widths of the first part B**1***c* and second part B**1***d*.

[0133] In some embodiments, the thermal resistances of the second portion B**2** and the third portion B**3** are about the same, and the thermal resistances of the first part B**1***c* and second part B**1***d* are different. In some embodiments, the thermal resistances of the second portion B**2** and the third portion B**3** are higher than the thermal resistances of the first part B**1***c* and second part B**1***d*. In other embodiments, the second portion B**2** and the third portion B**3** have different thermal resistances, and the first part B**1***c* and second part B**1***d* have different thermal resistances, but the thermal resistances of the second portion B**2** and the third portion B**3** are greater than the thermal resistances of the first part B**1***c* and second part B**1***d*. Thus, the heat transfer performance of the first part B**1***c* and second part B**1***d* is higher than the heat transfer performance of the second portion B**2** and the third portion B**3**. In other embodiments, the thermal resistances of the second portion B**2** and the third portion B**3** are about the same, the thermal resistance of the first part B**1***c* is less than the thermal resistances of the second portion B**2** and the third portion B**3** and the thermal resistance of the second part B**1***d* is less than the thermal resistance of the first part B**1***c*. In still other embodiments, the thermal resistance of the second part B**1***d* is higher than the thermal resistance of the mounting area **184**. Thus, the second part B**1***d* in thermal contact with the first heat source H**1** attached to the outer surface of the mounting area **184** dissipates heat more efficiently, and can be used to dissipate heat generated by high temperature heat sources, such as, central processing units (CPUs), graphic processing units (GPUs), and the like.

[0134] Referring to FIG. **15**, the second heat source H**2** is attached to the outer surface of the second casing **120***i* and thereby the outer surface of the vapor chamber **100***i* using a thermal paste, or other techniques. In some embodiments, the thermal resistances of the second portion A**2** and the third portion A**3** are about the same, and the thermal resistances of the first part A**1***c* and second part A**1***d* are different. In some embodiments, the thermal resistances of

the second portion A2 and the third portion A3 are higher than the thermal resistances of the first part A1*c* and second part A1*d*. In other embodiments, the second portion A2 and the third portion A3 have different thermal resistances, and the first part A1*c* and second part A1*d* have different thermal resistances, but the thermal resistances of the second portion A2 and the third portion A3 are higher than the thermal resistances of the first part A1*c* and second part A1*d*. Thus, the heat transfer performance of the first part A1*c* and second part A1*d* is higher than the heat transfer performance of the second portion A2 and the third portion A3. In other embodiments, the thermal resistances of the second portion A2 and the third portion A3 are about the same, the thermal resistance of the first part A1*c* is lesser than the thermal resistances of the second portion A2 and the third portion A3, and the thermal resistance of the second part A1*d* is lesser than the thermal resistance of the first part A1*c*. Thus, the second part A1*d* in thermal contact with the second heat source H2 attached to the outer surface of the second casing **120***i* dissipates heat more efficiently, and can be used to dissipate heat generated by high temperature heat sources such as central processing units (CPUs), graphical processing units (GPUs), and the like.

[0135] In some embodiments, the heat transfer performance of the second part B1*d* in thermal contact with the first heat source H1 attached to the mounting area **184** is about the same as the heat transfer performance of the second part A1*d* in thermal contact with the second heat source H2 attached to the outer surface of the second casing **120***i*. In some embodiments, the heat transfer performance of the second part B1*d* in thermal contact with the first heat source H1 attached to the mounting area **184** is higher than the heat transfer performance of the second part A1*d* in thermal contact with the second heat source H2 attached to the outer surface of the second casing **120***i*.

[0136] In some embodiments, the sheet-like wick structure contacting the first casing and inner wick structure of the second casing are copper mesh wick structures, or other types of wick structures. In some embodiments the thermal resistances of the first part A1*c*, second part A1*d*, second portion A2, and third portion A3 are similar to the thermal resistances of the first part B1*c*, second part B1*d*, second portion B2, and third portion B3, respectively. In some embodiments, the thermal resistances of the first part A1*c*, second part A1*d*, second portion A2, and third portion A3 are about the same as the thermal resistances of the first part B1*c*, second part B1*d*, second portion B2, and third portion B3, respectively. However, in other embodiments, the thermal resistances of the first part A1*c*, second part A1*d*, second portion A2, and third portion A3 are different from the thermal resistances of the first part B1*c*, second part B1*d*, second portion B2, and third portion B3, respectively. The thermal resistances can have any desired value as required by application or design provided, the heat transfer performance of the second part B1*d* in thermal contact with the first heat source H1 attached to the outer surface of the mounting area is relatively higher than or equal to the heat transfer performance of the second part in thermal contact with the second heat source H2 attached to the outer surface of the second casing.

[0137] The wick structures **141***k* and **142***k*, each, contact the sheet-like wick structure **130***i* and the inner wick structure **140***i* of the second casing **120***i*. The wick structures **141***k* and **142***k* decrease a distance the cooling fluid has to circulate in the vapor chamber during operation of the vapor chamber **100***i*.

[0138] When the vapor chamber is used in a vertical manner (e.g., in a position wherein the first heat source H1 and/or second heat source H2 are (is) located at a level higher than the second portion A2 and third portion A3), the cooling fluid in the vapor chamber evaporates and turns to vapor while absorbing the heat generated by the first and/or second heat sources H1 and/or H2, respectively. The thermal resistance of the second-part A1*d* is lower than the thermal resistance of the first part A1*c*. The thermal resistance of the first part A1*c* is lower than the thermal resistances of the second portion A2 and third portion A3. The heat transfer performance of the second part B1*d* in thermal contact with the first heat source H1 is similar to the heat transfer performance of the second part A1*d* in thermal contact with the second heat source H2.

[0139] In some embodiments, the thermal resistance of the second part B1*d* is greater than the thermal resistance of the mounting area **184**. In some embodiments, the supporting structures **122** within the first part A1*c* and second part A1*d* are surrounded with the copper sintered powdered wick layer **124**, and this reduces the thermal resistance of the first part A1*c* and second part A1*d* having the first heat source H1 and second heat source H2. As a result, heat transfer performance is increased. The cooling fluid (in vapor state) flows toward the second portion A2 and the third portion A3 and turns returns to liquid state, and the cooling fluid can flow to the second part A1*d* via the wick structures **141***k* and **142***k*. This configuration of the wick structures **141***k* and **142***k*, the portions of different thermal resistances, and the copper sintered powered wick layers surrounding the supporting structures decreases a temperature difference between the second part A1*d* and the second portion A2 and the third portion A3 by about 15 degrees Celsius or higher. The cooling fluid continuously circulates between the second part A1*d*, first part A1*c* and second portion A2 and third portion A3, thereby dissipating the heat generated by the first and/or second heat sources H1 and/or H2, respectively.

[0140] The wick structures **141***k* and **142***k* each have a flowing, generally sloping-ramped-shape and do not contact each other. Portions of the sheet-like wick structure **130***i* contacting the first casing **110***i* may have different thermal resistances. An inner wick structure **140***i* of the second casing **120***i* also has different thermal resistance compared to the sheet-like wick structure **130***l*. In some embodiments, the thermal resistances of the first part A1*c*, second part A1*d*, second portion A2, and third portion A3 of the second casing **120***k* are similar to the thermal resistances of the first part B1*c*, second part B1*d*, second portion B2, and third portion B3 of the sheet-like wick structure **130***i*, respectively. The thermal resistances of the first part A1*c*, second part A1*d*, second portion A2, and third portion A3 and first part B1*c*, second part B1*d*, second portion B2, and third portion B3 may be changed as required by application and design for obtaining a desired performance. A second heat source H2 may be attached to the outer surface of the second casing **120***i* in addition to a first heat source H1 being attached to the outer surface of the first casing **110***i*. A mounting area **184** includes a thickness and the mounting area **184** has a lower thermal resistance than that of the second part B1*d*, first part B1*c*, second portion B2, and third portion B3, respectively. A high temperature heat source, such as a

central processing unit (CPU, graphical processing unit (GPU), and the like may be attached to the outer surface of the mounting area **184** of the first casing **110***i*. The thermal resistance of the second part A**1***d* is lower than the first part A**1***c*, and the thermal resistance of the first part A**1***c* is lower than the thermal resistances of the second portion A**2** and third portion A**3**, respectively. One or more high temperature heat sources, may be attached to the outer surface of the second casing **120***i* opposite the second part A**1***d*. The wick structure **142***k* overlaps the second heat source H**2** and first heat source H**1**. The wick structures **141***k* and **142***k*, varied thermal resistance portions, and the copper sintered powered wick layers surrounding the supporting structures **122** improve circulation of cooling fluid in the vapor chamber **100***i*. Thus, the efficiency of the vapor chamber in dissipating heat is further increased.

[0141] Instead of the two wick structure some embodiments include a single wick structure. FIG. **17** illustrates a plan view of the second casing **120***i* including a wick structure **141***m*, according to embodiments of the disclosure.

[0142] The wick structure **141***m* contacts the sheet-like wick structure **130***i* contacting the first casing **110***i* and inner wick structure **140***i* of the second casing **120***i*. The wick structure **141***m* is a generally bell shape structure that is flattened at the top and is located in the gaps between the supporting structures **122**.

[0143] The wick structure **141***m* includes a first section **131** that is disposed in the first part A**1***a* and second part A**1***b*. The wick structure **141***m* includes a second section **112** disposed in the second portion A**2** and is located at a lower level (referring to the orientation in FIG. **17**) than the first section **131**. The second section **112** is arranged relatively horizontal and portions of the first section **131** that are connected to the second section **112** are inclined (e.g., positioned at an angle greater than 0° and less than 90°) relative to the second section **112**. The first section **131** is connected to the second section **112** at the connection between the first part A**1***a* and second portion A**2**. As illustrated, the wick structure **141***m* generally follows the shape of the casing **120***i*. In an example, the first section **131** meets the second section **112** at angles or degrees of curvatures greater than or less than 45°, and greater than 0° and 90°.

[0144] The wick structure **141***m* includes a third section **104** disposed in the third portion A**3** and is located at a lower level (referring to the orientation in FIG. **17**) that the first section **131**. The third section **104** is arranged relatively horizontal and portions of the first section **131** that are connected to the third section **104** are inclined (e.g., positioned at an angle greater than 0° and less than 90°) relative to the third section **104**. In some embodiments, the second section **112** and the third section **104** are located at a same horizontal level (e.g., collinear). In some other embodiments, the second section **112** and the third section **104** are vertically offset from each other. The first section **113** is connected to the third section **104** at the connection between the second part A**1***b* and third portion A**3**. In an example, the first section **113** meets the third section **104** at angles or degrees of curvatures greater than or less than 45°, and greater than 0° and 90°. The first section **131** of the wick structure **141***m* and the second section **104** of the wick structure **141***m* form the opposite ends of the wick structure **141***m* and do not contact each other.

[0145] The first section **131**, located in the first part A**1***a* and second part A**1***b*, overlaps the first heat source H**1** attached to the outer surface of the mounting area **184** of the first casing **110***i* and the second heat source H**2** attached to the outer surface of the second casing **120***i*. The second section **112** includes an end S**3** of the wick structure **141***m* in the second portion A**2**. The third section **104** includes an end S**4** of the wick structure **141***m* in the third portion A**3**. In an example, the first and second heat sources H**1**, H**2**, are attached to the outer surfaces of the mounting area **184** of the first casing **110***i* and second casing **120***i*, in the second part A**1***b* and first part A**1***a*, respectively. The thermal resistance of the second part A**1***b* is lower than the thermal resistance of the first part A**1***a*. The thermal resistance of the first part A**1***a* is lower than the thermal resistances of the second portion A**2** and third portion A**3**. The heat transfer performance of the second part B**1***b* in thermal contact with the first heat source H**1** is higher than the heat transfer performance of the second part A**1***b* in thermal contact with the second heat source H**2**.

[0146] As illustrated, the end S**3** of the wick structure **141***m* is located proximate (non-contacting) an edge A**32** of the second portion A**2** and the end S**4** of the wick structure **141***m* is located proximate (non-contacting) an edge A**33** of the third portion A**3** opposite the edge A**32**. The second sections **112** and **114** are disposed proximate (non-contacting) an edge A**31** of the second casing **120***i* that forms (or otherwise defines) the first part A**1***a*, the second part A**1***b*, the second portion A**2**, and the third portion A**3** of the second casing **120***i*. The edge A**31** connects the edge A**32** and edge A**33**. In other embodiments, the end S**3** may contact the edge A**32** and the end S**4** may contact the edge A**33**.

[0147] As illustrated, the first section **131** of the wick structure **141***m* is located closer to the top edge A**34** of the second casing **120***i* (and thereby the top edge of the vapor chamber **100***i*) than the edge A**31**. In other embodiments, the first section **131** of the wick structure **141***m* is located closer to the edge A**31** than the edge A**34**. The placement of the first section **131** is not limited in any regard, and the first section **131** can be located anywhere in the first part A**1***a* and second part A**1***b* provided the first section **131** (and thereby the wick structure **141***m*) overlaps the first heat source H**1** and second heat source H**2**.

[0148] It will be understood that the location of the mounting area **184** may be varied depending on the application and design requirements. The mounting area **184** can be located at any desired location provided the first heat source H**1** is overlapped by the wick structure **141***m*.

[0149] The wick structure **141***m* decreases a distance the cooling fluid has to circulate in the vapor chamber **100***i*. The length of the wick structure **141***m* is not limited to any particular length and may be adjusted according to application and design requirements.

[0150] When the vapor chamber is used in a vertical manner (e.g., in a position wherein the first heat source H**1** and/or second heat source H**2** are located at a level higher than the second portion A**2** and third portion A**3**), the cooling fluid in the vapor chamber evaporates and turns to vapor while absorbing the heat generated by the first and/or second heat sources H**1** and/or H**2**, respectively. The thermal resistance of the second part A**1***b* is lower than the thermal resistance of the first part A**1***a*. The thermal resistance of the first part A**1***a* is lower than the thermal resistances of the second portion A**2** and third portion A**3**. The heat transfer

performance of the second part B**1***b* in thermal contact with the first heat source H**1** attached to the outer surface of the mounting area **184** is greater than the heat transfer performance of the second part A**1***b* in thermal contact with the second heat source H**2** attached to the outer surface of the second casing **120***m*. In some embodiments, the thermal resistance of the second part B**1***b* is higher than the thermal resistance of the mounting area **184**. In some embodiments, the supporting structures **122** are surrounded by the copper sintered powdered wick layer **124** in the first part A**1***a* and second part A**1***b*, and this further decreases the thermal resistance of the first part A**1***a* and second part A**1***b*, and thereby increases the heat transfer performance. The cooling fluid (in vapor state) flows toward the second portion A**2** and the third portion A**3** and turns back to liquid state, and the cooling fluid can flow to the first part A**1***a* and second part A**1***b* via the wick structure **141***m*. This configuration of the wick structure **141***m*, the portions having different thermal resistances, and the copper sintered powered wick layers surrounding the supporting structures, decreases a temperature difference between the first part A**1***a* and second part A**1***b* and the second portion A**2** and the third portion A**3** by around 15 degrees Celsius or more. The cooling fluid continuously circulates between the first part A**1***a* and second part A**1***b* and second portion A**2** and third portion A**3**, thereby dissipating the heat generated by the first and/or second heat sources H**1** and/or H**2**, respectively.

[0151] FIG. **18** illustrates a plan view of the second casing **120***i* including the wick structure **141***m*, according to embodiments of the disclosure. In this embodiment, the second casing **120***i* includes the inner wick structure **140***i* including the first part A**1***c*, the second part A**1***d* positioned within the first part A**1***c*, the second portion A**2**, and the third portion A**3**. The first part A**1***c* and second part A**1***d* are positioned between the second portion A**2** and third portion A**3**. The structure of the second casing **120***i* including the wick structure **141***m* is similar in some respects to the second casing **120***i* illustrated in FIG. **15** including wick structures **141***k* and **142***k*, and will be understood with reference thereto where like reference numerals indicate like components and are not described again in detail.

[0152] The foregoing outlines features of several embodiments or examples so that those skilled in the art may better understand the aspects of the present disclosure. Those skilled in the art should appreciate that they may readily use the present disclosure as a basis for designing or modifying other processes and structures for carrying out the same purposes and/or achieving the same advantages of the embodiments or examples introduced herein. Those skilled in the art should also realize that such equivalent constructions do not depart from the spirit and scope of the present disclosure, and that they may make various changes, substitutions, and alterations herein without departing from the spirit and scope of the present disclosure.

What is claimed is:

1. A heat dissipation device, comprising:

a first casing including:

a first inner surface having a first wick structure, the first wick structure including:

a first portion;

a second portion; and

a third portion,

wherein the first portion is disposed between the second portion and third portion;

a first outer surface opposite the first inner surface; and

a first mounting plate for receiving a first heat source disposed on the first outer surface and located overlapping the first portion of the first wick structure;

a second casing coupled to the first casing, the second casing including:

a second inner surface having a second wick structure, the second wick structure including:

a first portion opposite the first portion of the first wick structure;

a second portion opposite the second portion of the first wick structure; and

a third portion opposite the third portion of the first wick structure,

wherein the first portion of the second wick structure is disposed between the second portion and third portion of the second wick structure; and

a second outer surface opposite the second inner surface and including a second mounting plate different from the first mounting plate for receiving a second heat source, the second mounting plate located overlapping the first portion of the second wick structure;

a third wick structure having at least two bends and arranged between the first inner surface and the second inner surface and arranged in the first portions of the first wick structure and the second wick structure, the second portions of the first wick structure and the second wick structure, and the third portions of the first wick structure and the second wick structure, the third wick structure at least partially overlaps the second mounting plate and the first mounting plate; and

a plurality of columns arranged between the first and second inner surfaces,

wherein thermal resistances of the first portion of the first wick structure, second portion of the first wick structure and third portion of the first wick structure are same as thermal resistances of the first portion of the second wick structure, second portion, and third portion, respectively,

the thermal resistance of the first portion of the first wick structure is less than the thermal resistances of the second portion and the third portion of the first wick structure, and

the thermal resistance of the first portion of the second wick structure is less than the thermal resistances second portion and third portion of the second wick structure.

2. The heat dissipation device of claim **1**, wherein a thermal resistance of the first mounting plate is less than the thermal resistances of the first portion of the first wick structure and the first portion of the second wick structure.

3. The heat dissipation device of claim **1**, wherein the first portion of the second wick structure comprises a first part and a second part and the first portion of the first wick structure comprises a first part and a second part, the first part of the first wick structure is opposite the first part of the second wick structure, and the second part of the first wick structure is opposite the second part of the second wick structure.

4. The heat dissipation device of claim **3**, wherein the first part and second part, each of the first wick structure are adjacent each other,

the first part and second part, each of the second wick structure are adjacent each other,

the second portion of the first wick structure is adjacent the first part of the first wick structure,

the second portion of the second wick structure is adjacent the first part of the second wick structure,

the third portion of the first wick structure is adjacent the second part of the first wick structure,

the third portion of the second wick structure is adjacent the second part of the second wick structure, and

a thermal resistance of the second part of the first wick structure is less than the thermal resistance of the first part of the first wick structure and a thermal resistance of second part of the second wick structure is less than the thermal resistance of the first part of the second wick structure and

the second mounting plate is disposed overlapping the first part of the first wick structure and the first part of the second wick structure and the first mounting plate is disposed overlapping the second part of the first wick structure and second part of the second wick structure.

5. The heat dissipation device of claim **3**, wherein the first part of the first wick structure is within the second part of the first wick structure,

the first part of the second wick structure is within the second part of the second wick structure,

the second portion of the first wick structure is adjacent the second part of the first wick structure,

the second portion of the first wick structure is adjacent to the second part of the second wick structure,

the third portion of the first wick structure is adjacent the second pan of the first wick structure,

the third portion of the second wick structure is adjacent the second part of the second wick structure, and

wherein a thermal resistance of the first part of the second wick structure are less than a thermal resistance of the first part of the first wick structure,

a thermal resistance of the second pan of the first wick structure is less than a thermal resistance of the second part of the first wick structure, and

the second mounting area and first mounting area are disposed overlapping the first part of the second wick structure and the first part of the first wick structure, respectively.

6. The heat dissipation device of claim **5**, wherein a cross-sectional area of the first part of the second wick structure is greater than a cross-sectional area of the second part of the second wick structure, and

a cross-sectional area of the second part of the second wick structure is greater than cross-sectional areas of the second portion and third portion of the second wick structure.

7. The heat dissipation device of claim **1**, wherein each of the plurality of columns adjacent to the third wick structure are surrounded by porous wick structures.

8. The heat dissipation device of claim **1**, wherein a cross-sectional area of the first portion of the first wick structure is greater than cross-sectional areas of the second portion and the third portion of the first wick structure.

9. The heat dissipation device of claim **1**, wherein each of the plurality of columns overlapping the second mounting plate and first mounting plate are surrounded by porous wick structures.

* * * * *