US012385448B2

(12) **United States Patent**
Gormley

(10) **Patent No.: US 12,385,448 B2**
(45) **Date of Patent: Aug. 12, 2025**

(54) **THRUST REVERSER WITH LOST MOTION DEVICE**

(71) Applicant: **Rohr, Inc.**, Chula Vista, CA (US)

(72) Inventor: **Timothy Gormley**, Bonita, CA (US)

(73) Assignee: **Rohr, Inc.**, Chula Vista, CA (US)

(*) Notice: Subject to any disclaimer, the term of this patent is extended or adjusted under 35 U.S.C. 154(b) by 0 days.

(21) Appl. No.: **18/597,547**

(22) Filed: **Mar. 6, 2024**

(65) **Prior Publication Data**

US 2024/0301843 A1 Sep. 12, 2024

Related U.S. Application Data

(60) Provisional application No. 63/450,293, filed on Mar. 6, 2023.

(51) **Int. Cl.**
F02K 1/72 (2006.01)

(52) **U.S. Cl.**
CPC ***F02K 1/72*** (2013.01); *F05D 2220/323* (2013.01); *F05D 2260/30* (2013.01); *F05D 2260/50* (2013.01)

(58) **Field of Classification Search**
CPC F02K 1/70; F02K 1/72
See application file for complete search history.

(56) **References Cited**

U.S. PATENT DOCUMENTS

3,500,645 A 3/1970 Hom
3,511,055 A 5/1970 Timms
3,608,314 A 9/1971 Colley
3,831,376 A 8/1974 Moorehead
5,228,641 A 7/1993 Remlaoui
5,309,711 A 5/1994 Matthias
5,987,881 A * 11/1999 Gonidec F02K 1/70 239/265.29
6,036,238 A 3/2000 Lallament
6,895,742 B2 5/2005 Lair
(Continued)

FOREIGN PATENT DOCUMENTS

EP 3018327 B1 4/2018
EP 3051112 B1 4/2020
(Continued)

OTHER PUBLICATIONS

EP Search Report for EP Patent Application No. 24161887.5 dated Jul. 22, 2024.
(Continued)

Primary Examiner — Andrew H Nguyen
(74) *Attorney, Agent, or Firm* — Getz Balich LLC

(57) **ABSTRACT**

An assembly is for an aircraft propulsion system. This assembly includes a fixed structure, a translating structure and a thrust reverser. The translating structure is configured to translate between a stowed position and a deployed position. The thrust reverser includes a blocker door, a linkage mount and an actuation linkage. The blocker door is pivotally coupled to the translating structure. The linkage mount includes a mount link, a mount spring and a mount stop. The mount link is pivotally coupled to the fixed structure about a pivot axis. The mount spring is configured to bias the mount link about the pivot axis against the mount stop. The actuation linkage operatively couples the blocker door to the mount link.

17 Claims, 24 Drawing Sheets

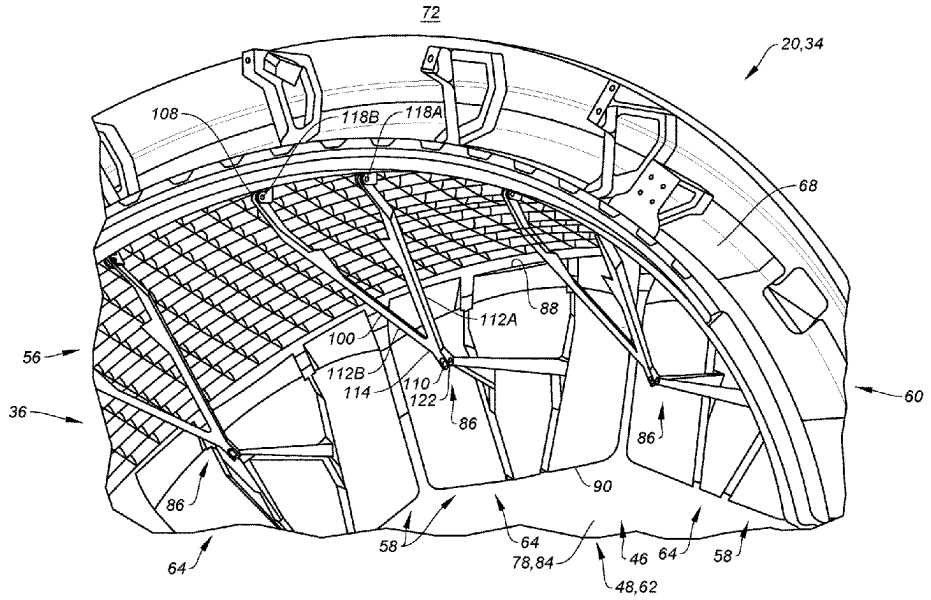

(56) **References Cited**

U.S. PATENT DOCUMENTS

9,127,623	B2	9/2015	Peyron	
9,518,534	B2	12/2016	Kusel	
9,739,235	B2	8/2017	Gormley	
9,938,929	B2	4/2018	Gormley	
10,006,405	B2	6/2018	Stuart	
10,794,328	B2	10/2020	Gormley	
10,895,220	B2	1/2021	Gormley	
11,835,015	B2	12/2023	Gormley	
2007/0007388	A1	1/2007	Harrison	
2010/0270428	A1	10/2010	Murphy	
2013/0264399	A1	10/2013	Wingett	
2014/0353399	A1*	12/2014	Stuart	F02K 1/72 239/11
2015/0068190	A1	3/2015	Roger	
2015/0176528	A1	6/2015	Peyron	
2016/0245228	A1	8/2016	Gormley	
2017/0138304	A1	5/2017	Gormley	
2017/0198659	A1	7/2017	Gormley	
2017/0292474	A1	10/2017	Davies	
2017/0298871	A1	10/2017	Sawyers-Abbott	
2018/0258881	A1	9/2018	Schaefer	
2020/0003155	A1	1/2020	Kelford	
2020/0011272	A1	1/2020	Gormley	
2020/0018258	A1	1/2020	Aziz	
2020/0263632	A1*	8/2020	Ganapathi Raju	F02K 1/72
2021/0108594	A1	4/2021	Qiming	
2022/0397078	A1*	12/2022	Plaquin	F02K 1/72

FOREIGN PATENT DOCUMENTS

GB	130875	A	8/1919
GB	892483	A	3/1962

OTHER PUBLICATIONS

EP Search Report for EP Patent Application No. 24161877.6 dated Jul. 24, 2024.
EP Search Report for EP Patent Application No. 24161894.1 dated Jul. 22, 2024.
EP search report for EP24161883.4 dated Oct. 1, 2024.
EP search report for EP24161881.8 dated Oct. 1, 2024.

* cited by examiner

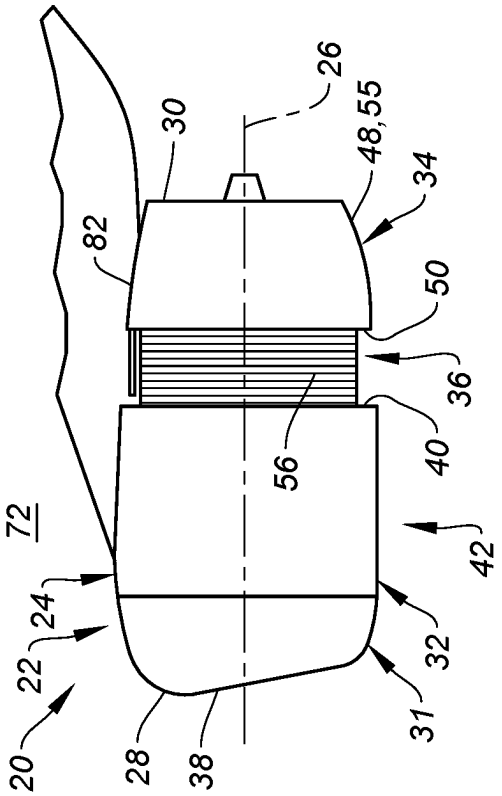
20
22
24
72
82
30
26
48,55
34
50
36
40
56
42
32
31
28
38

FIG. 2

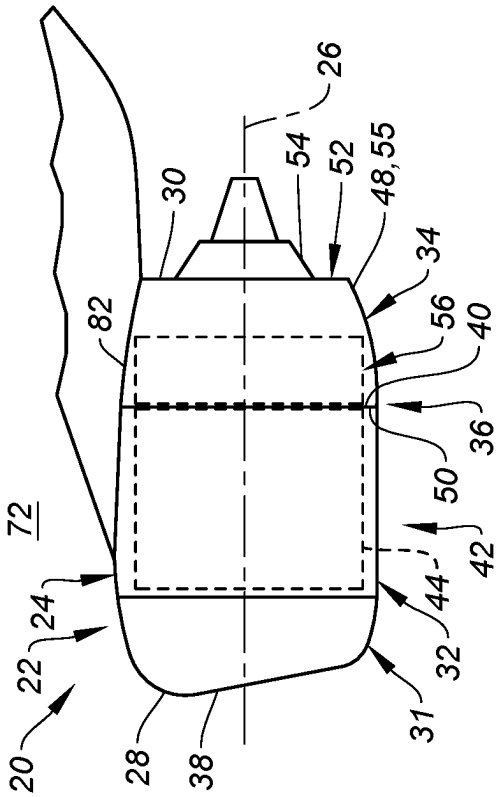
20
22
24
72
82
30
26
54
52
48,55
34
56
40
36
50
42
44
32
31
28
38

FIG. 1

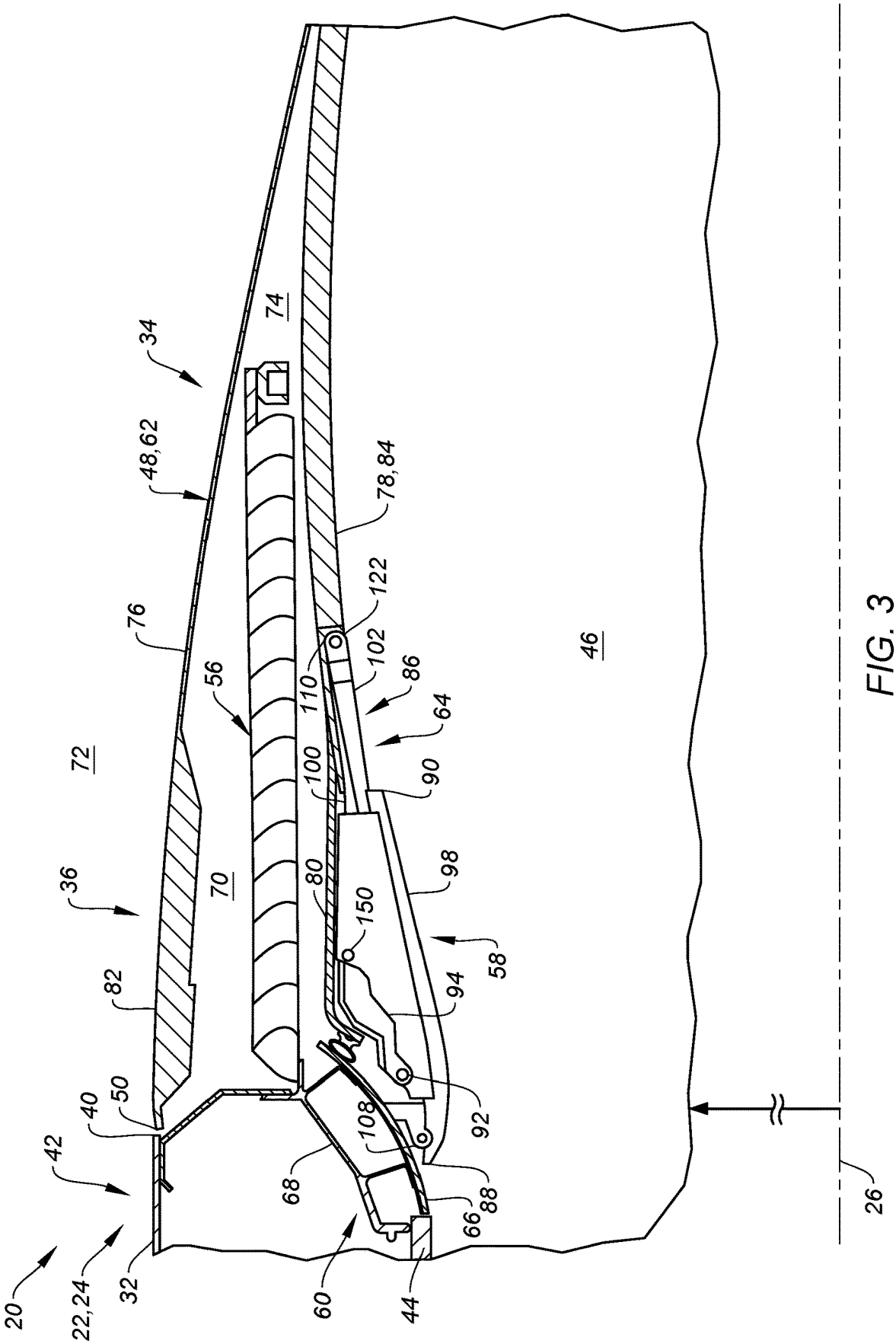
20
22,24
32
42
40
50
82
36
72
76
48,62
34
74
56
70
78,84
122
102
110
86
64
100
90
80
150
98
58
94
92
108
88
66
68
60
44
46
26

FIG. 3

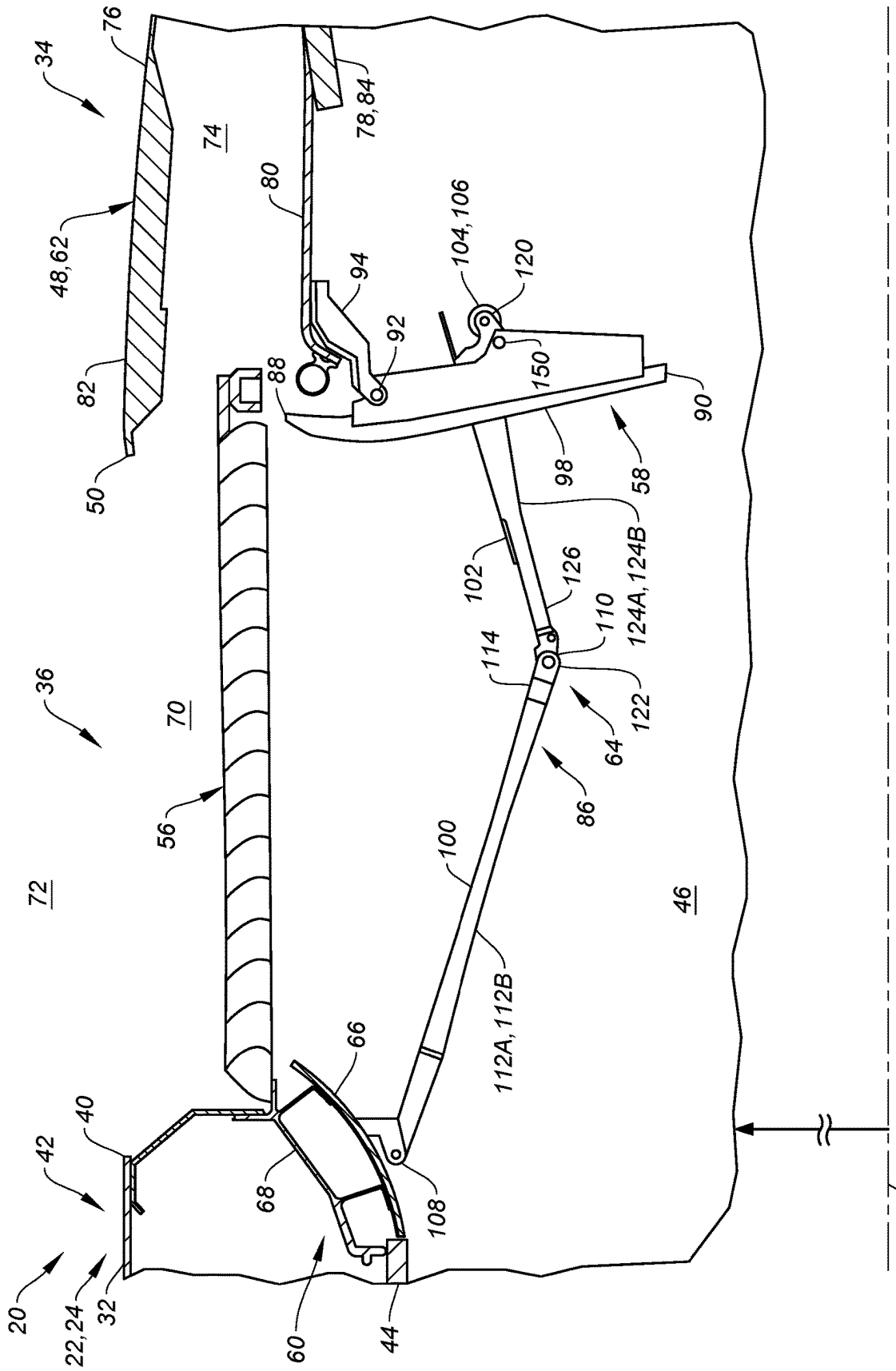
34
76
74
78,84
80
48,62
94
104,106
120
92
82
88
150
90
50
98
58
102
126
124A,124B
110
114
122
36
70
64
56
86
100
72
46
112A,112B
66
40
42
68
108
20
22,24
32
60
44
26

FIG. 4

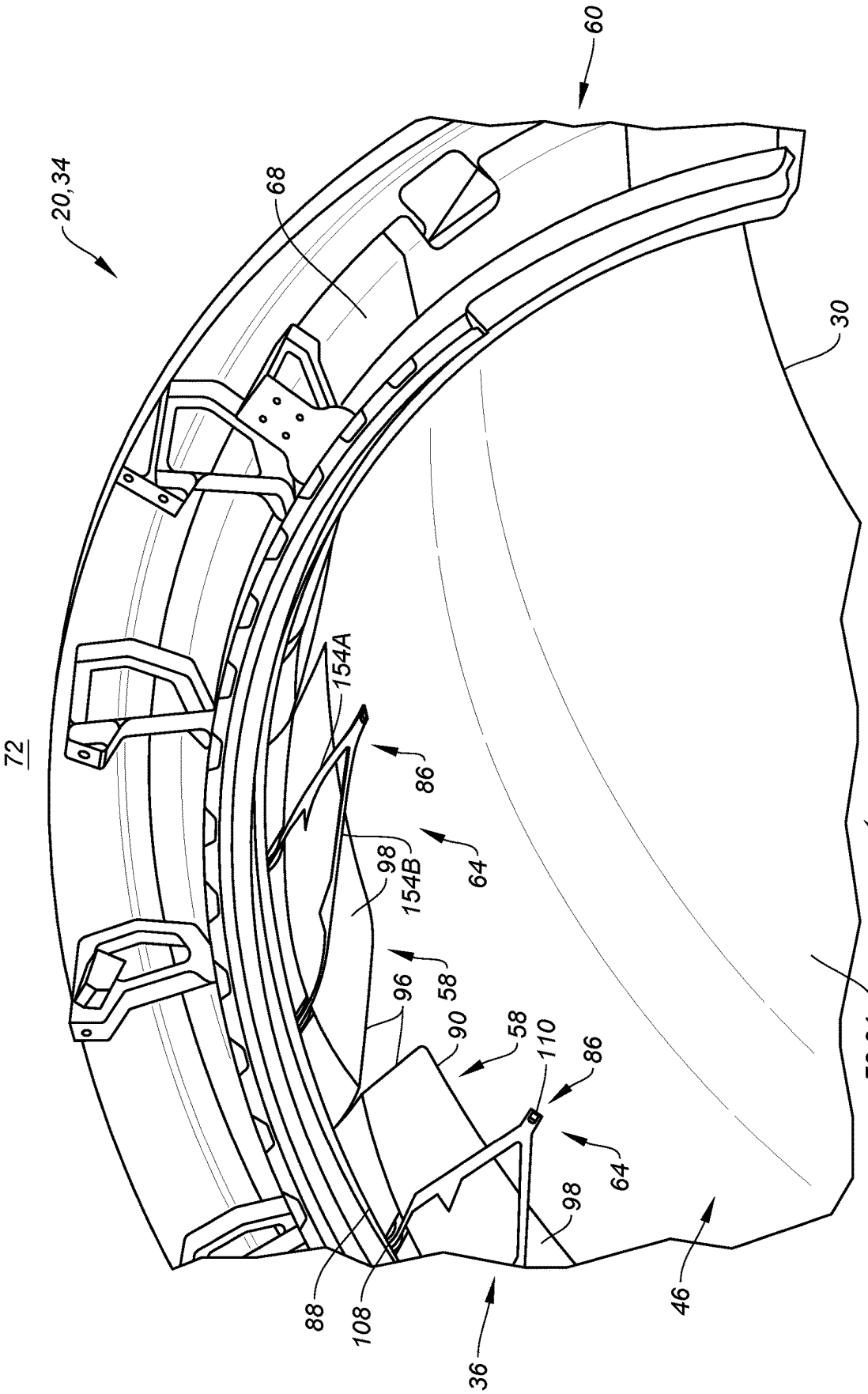
60
20,34
68
30
72
154A
86
98
154B
64
58
96
90
58
110
86
64
98
88
108
36
46
78,84
48,62

FIG. 5A

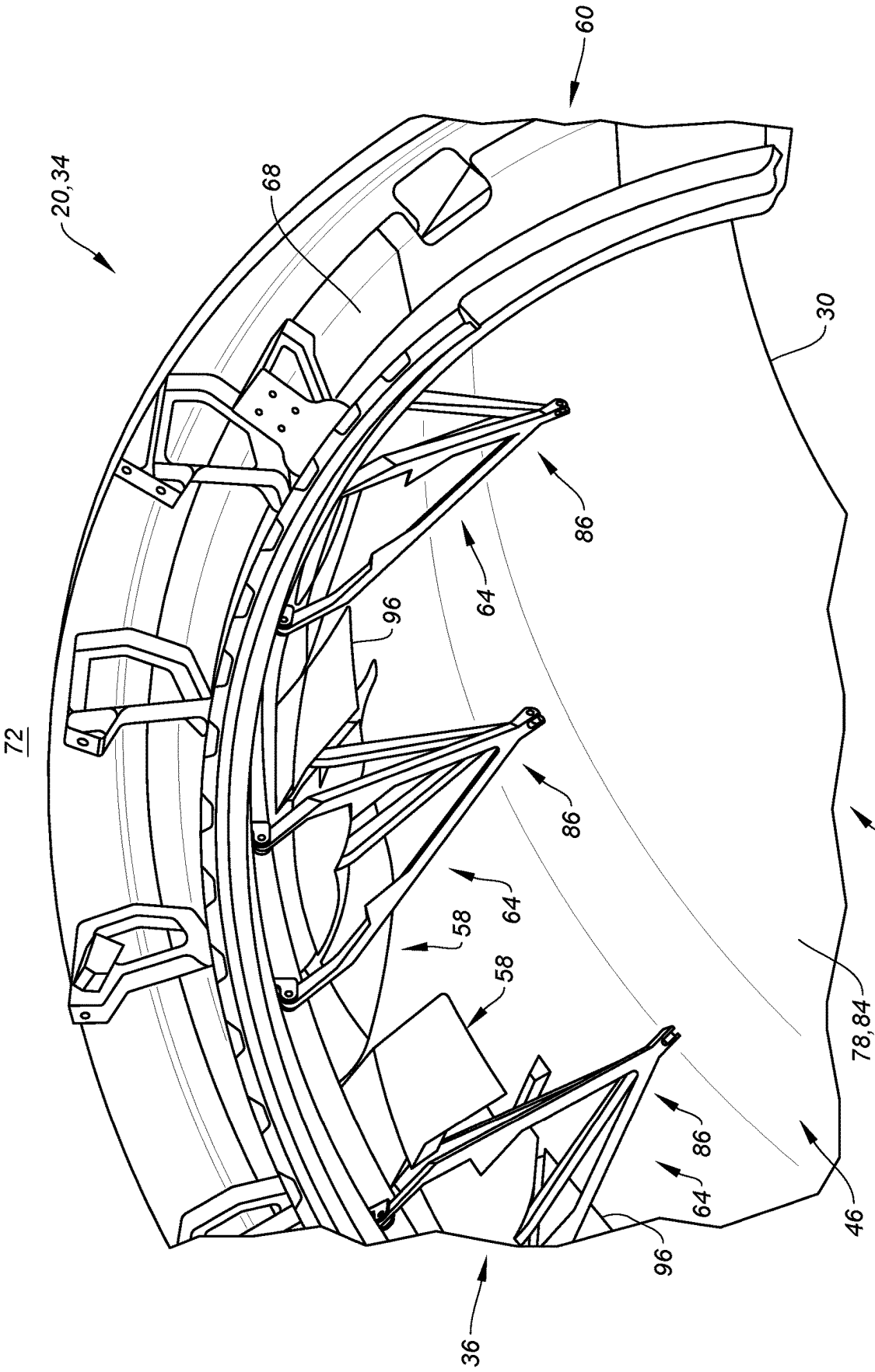

FIG. 5B

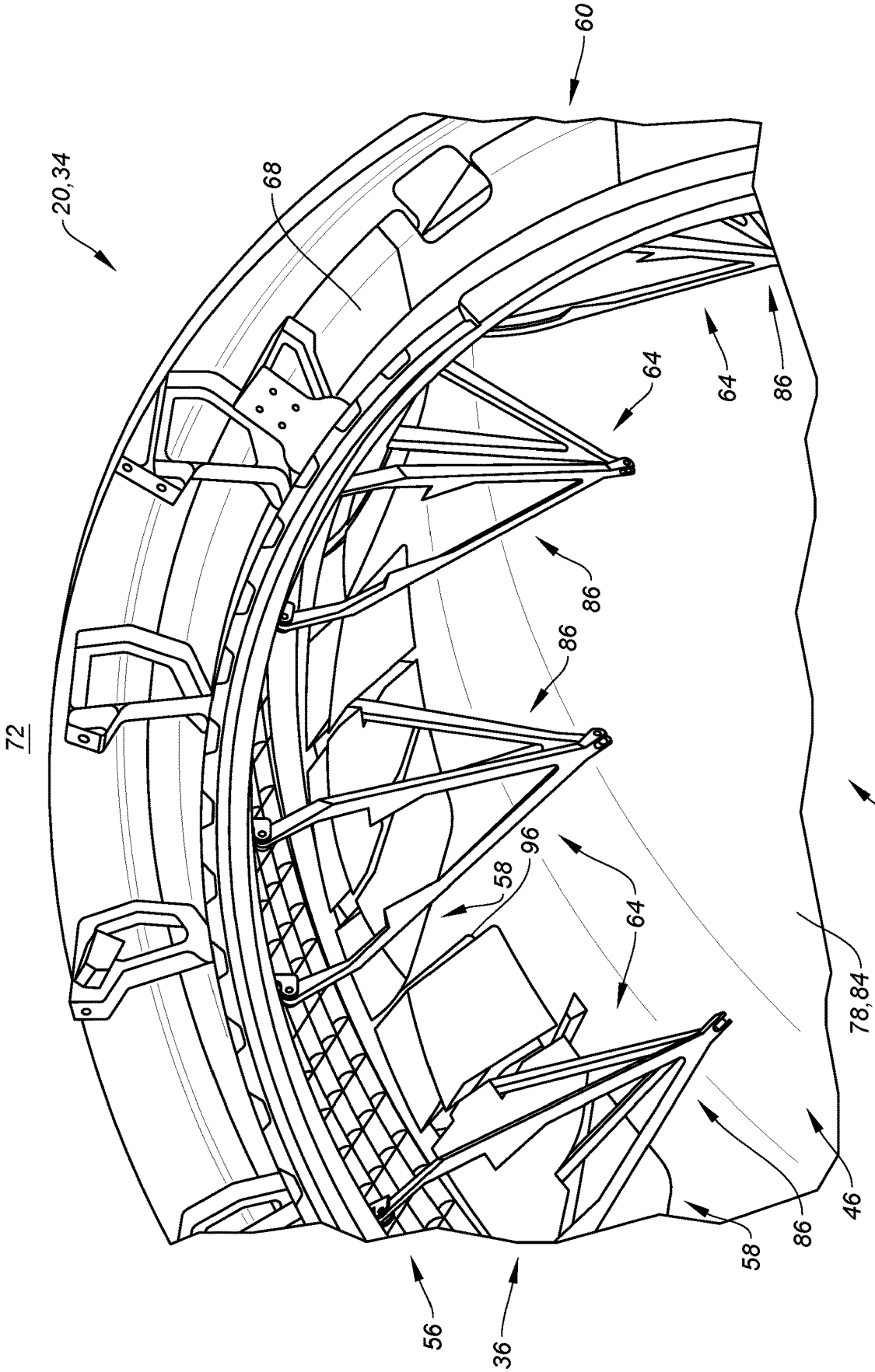

FIG. 5C

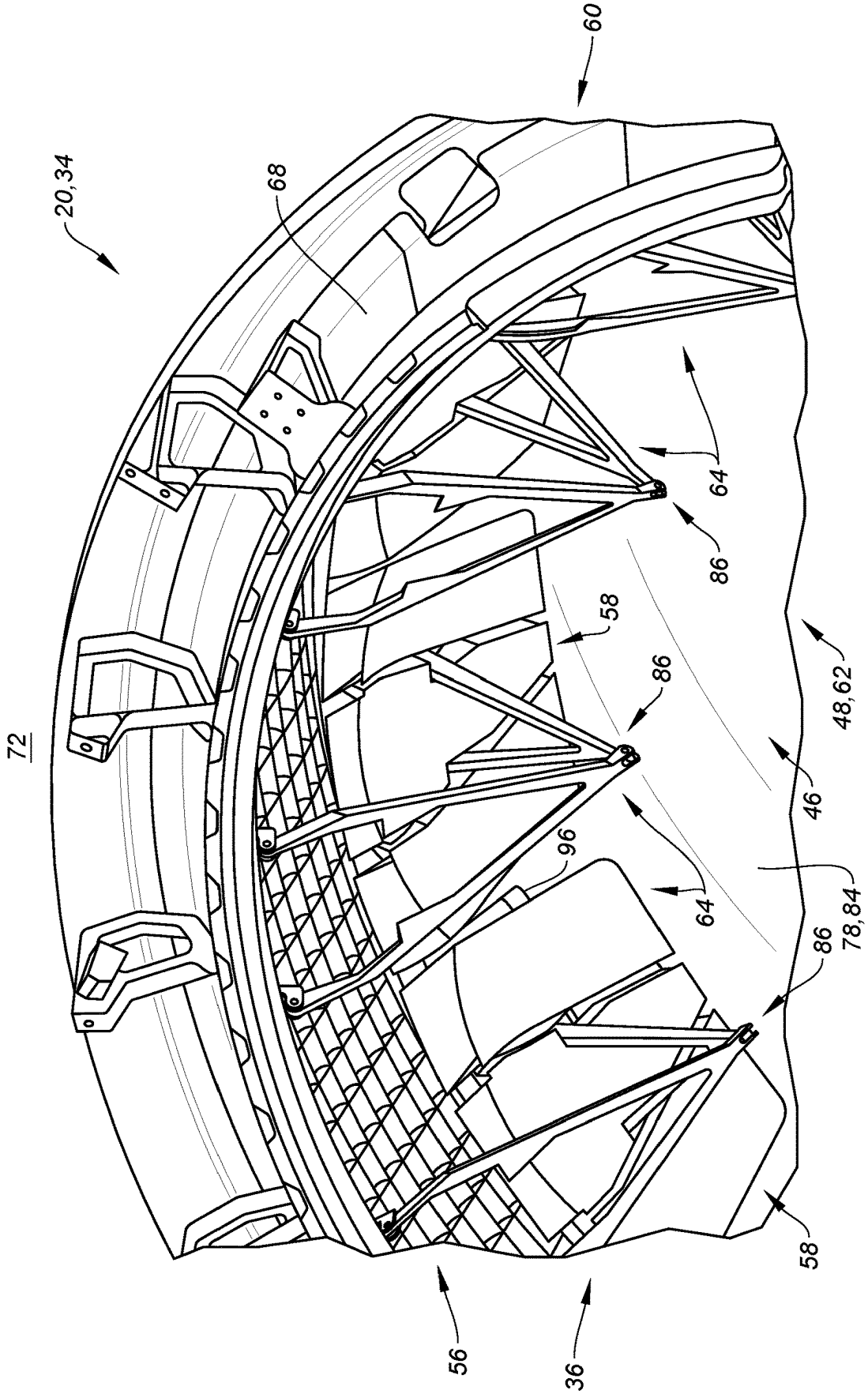

FIG. 5D

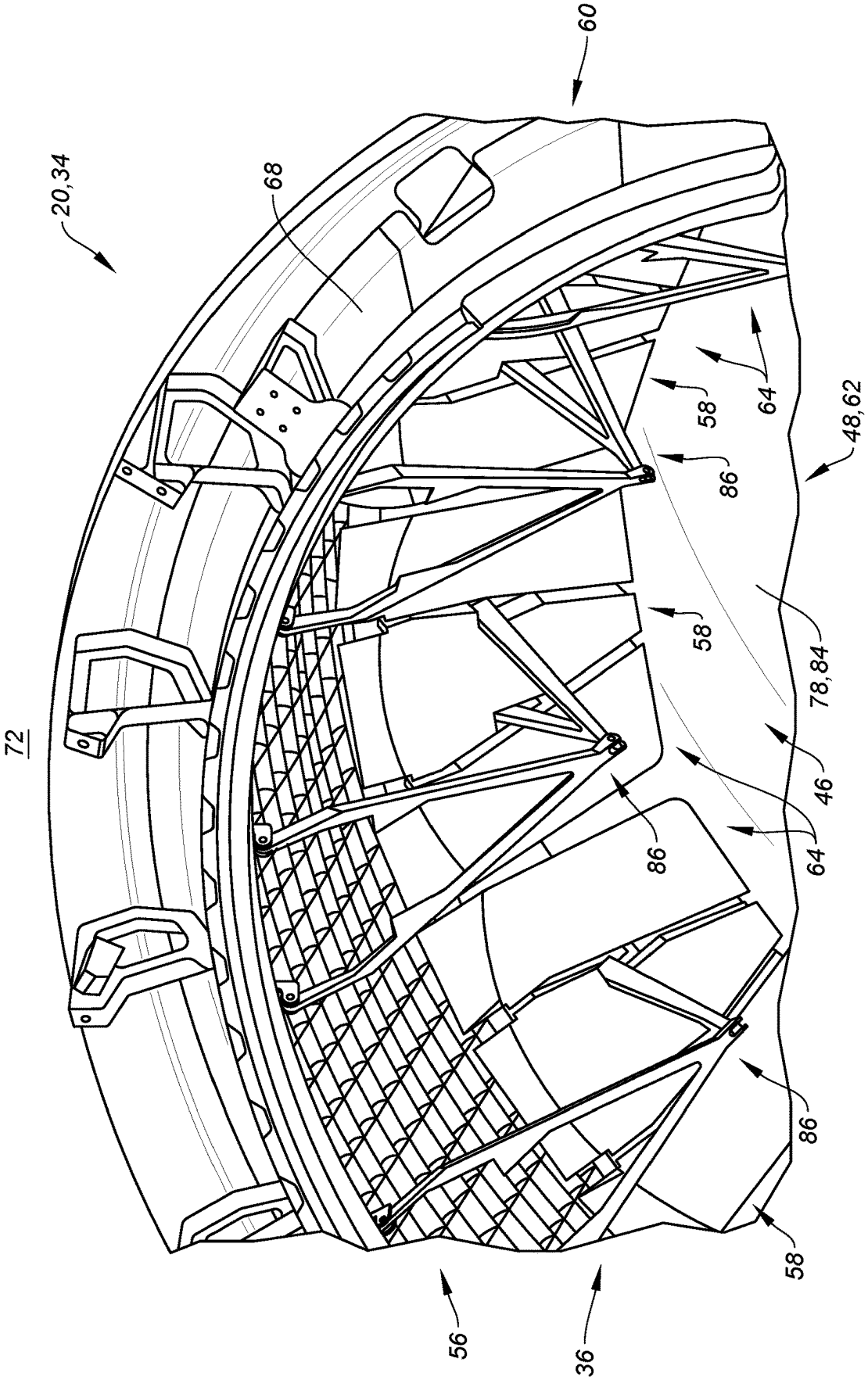

FIG. 5E

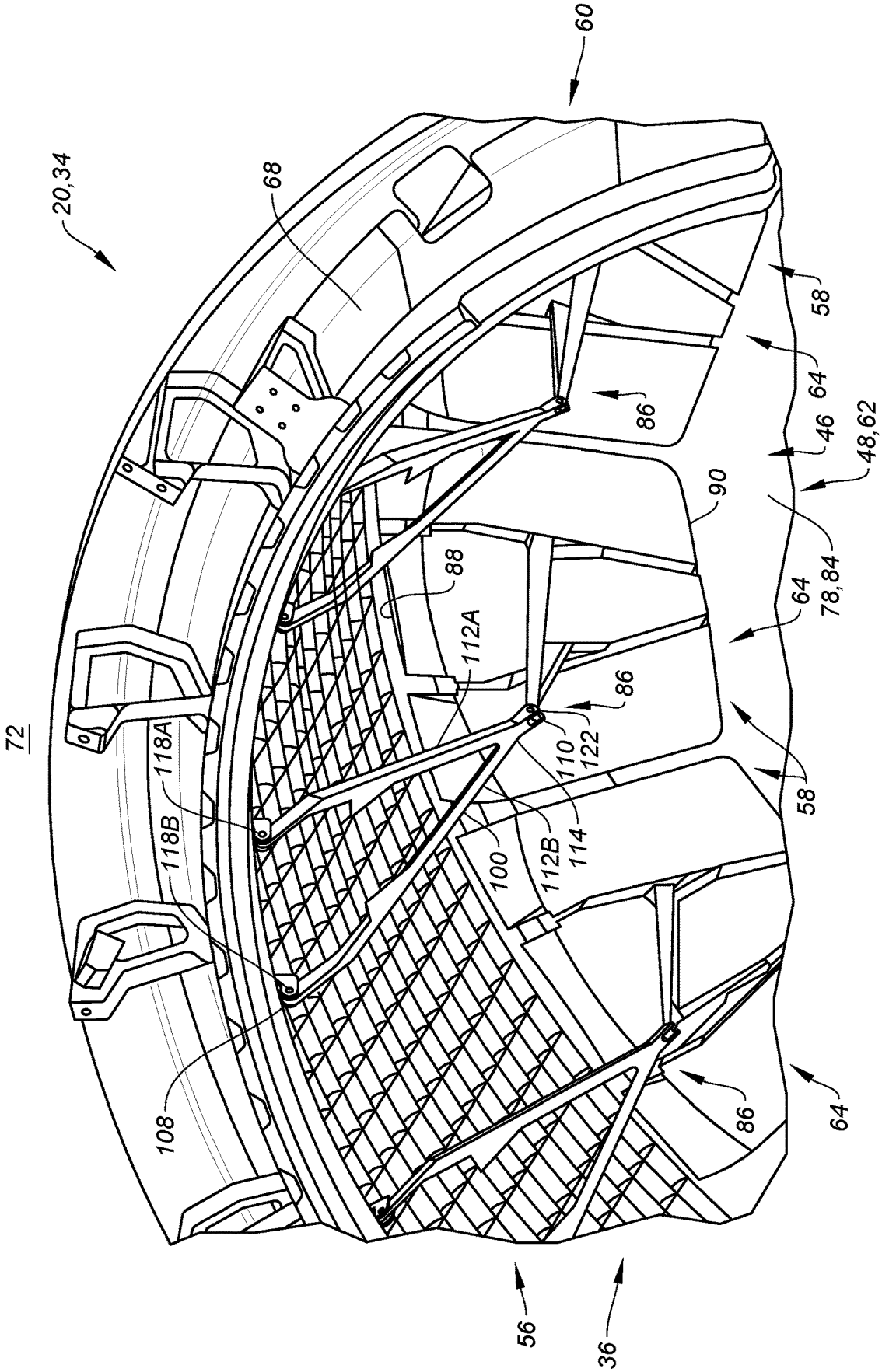
60
20,34
68
58
64
86
46
48,62
90
78,84
64
88
112A
86
110
122
58
72
118A
118B
100
112B
114
108
86
64
56
36

FIG. 5F

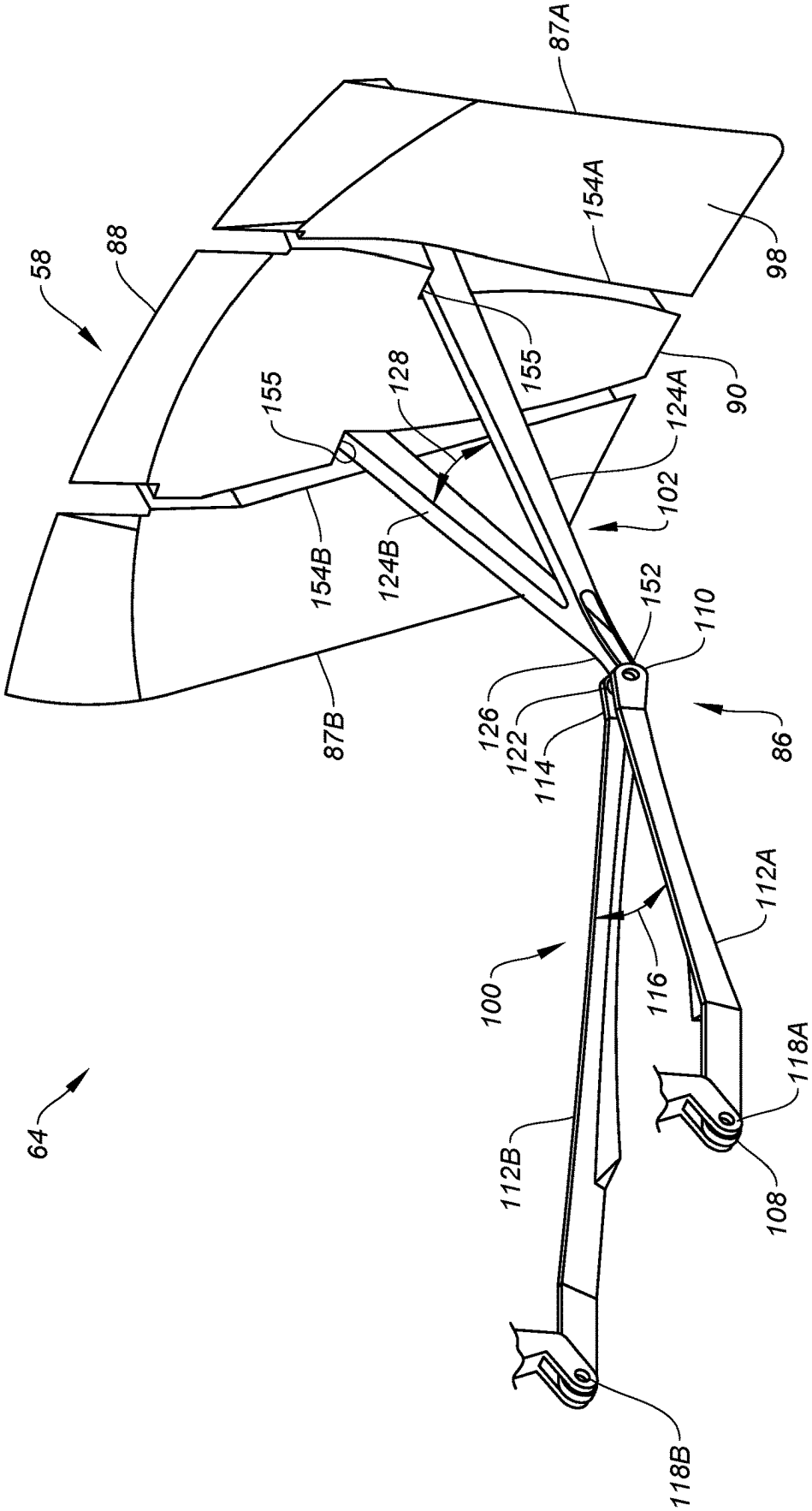
87A
154A
98
58
88
155
128
155
90
124A
102
154B
124B
152
110
126
122
114
86
87B
112A
100
116
118A
64
112B
108
118B

FIG. 6

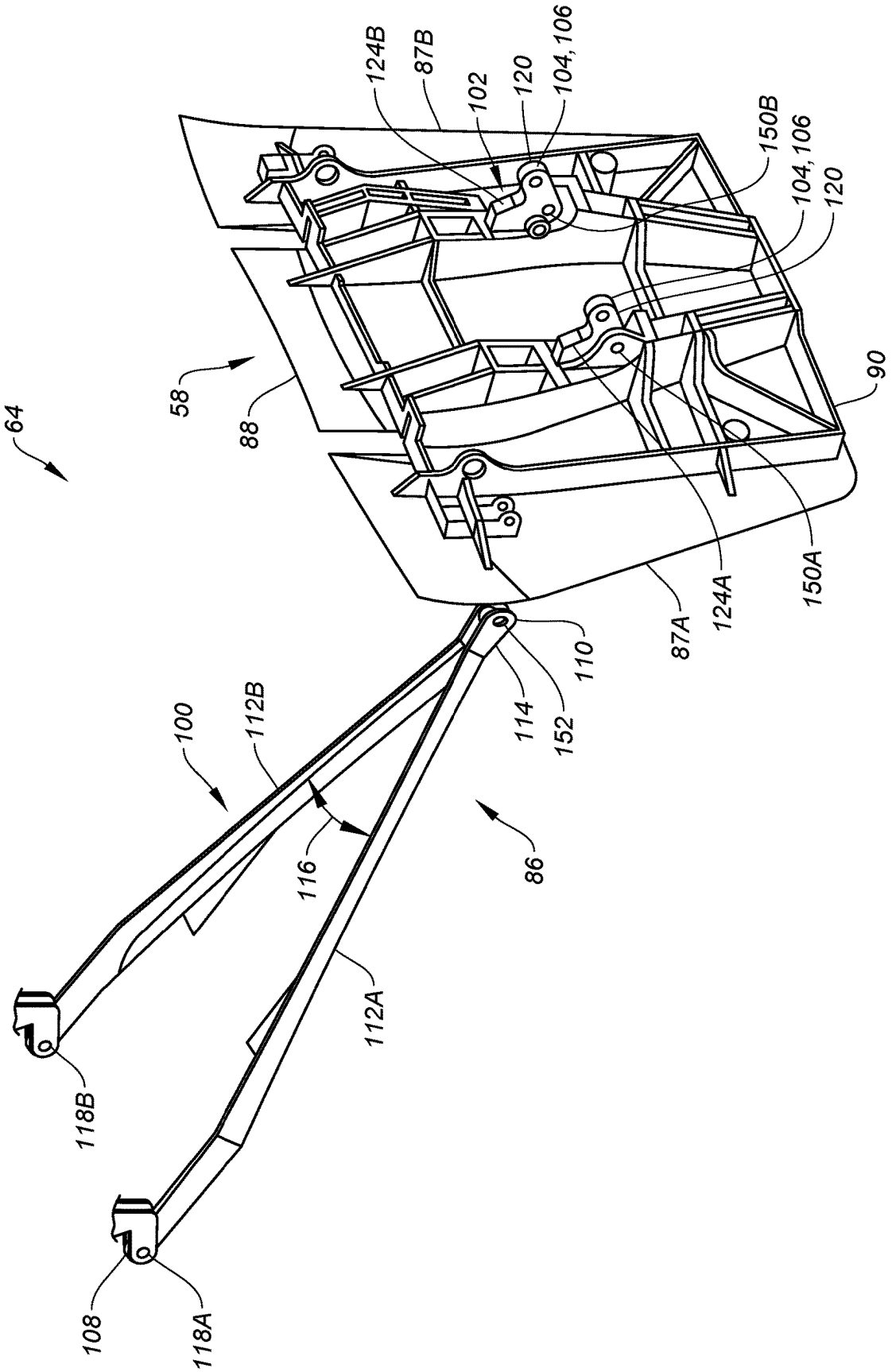
64
58
88
124B
87B
102
120
104,106
150B
104,106
120
90
150A
124A
87A
110
152
114
86
100
112B
116
112A
118B
108
118A

FIG. 7

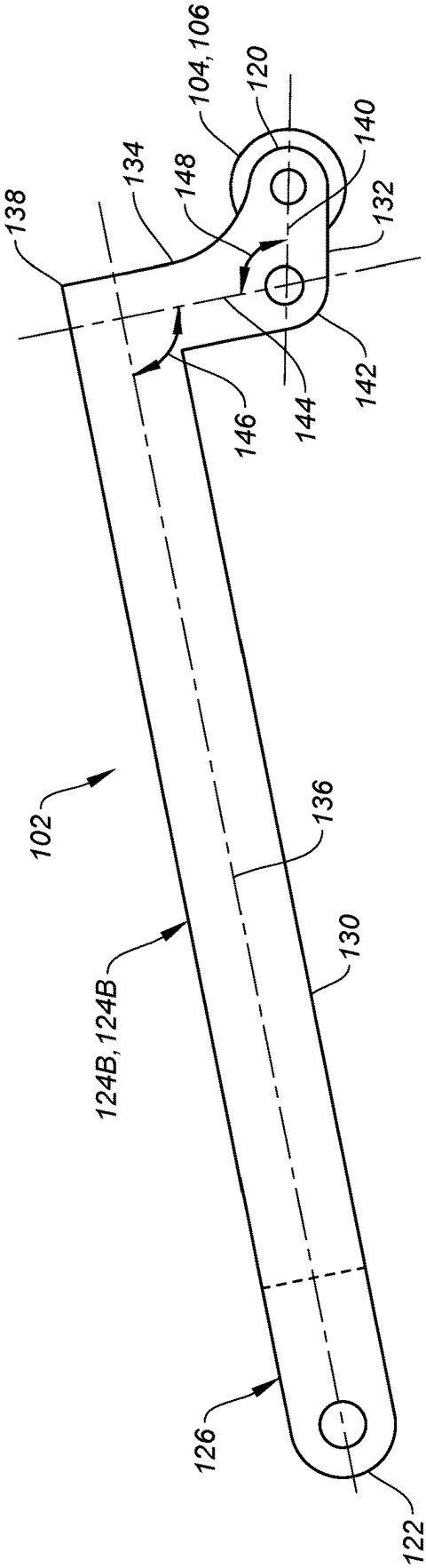
138
134
148
104, 106
120
140
132
142
144
146
102
124B, 124B
136
130
126
122

FIG. 8

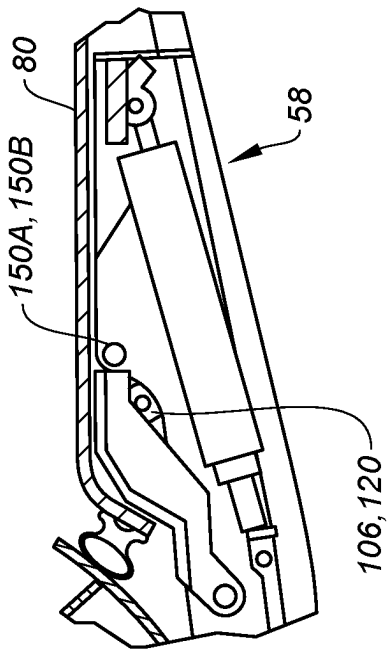

FIG. 9A

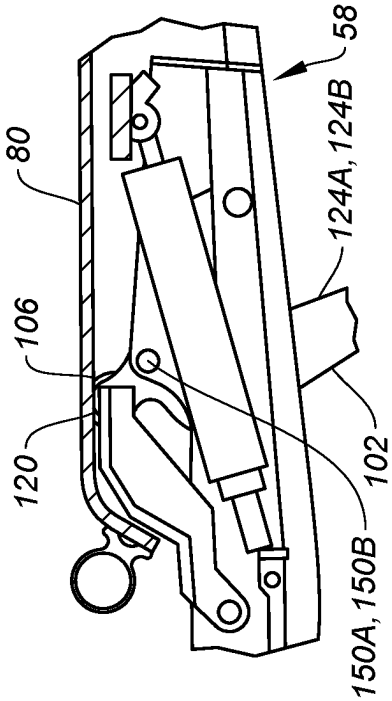

FIG. 9B

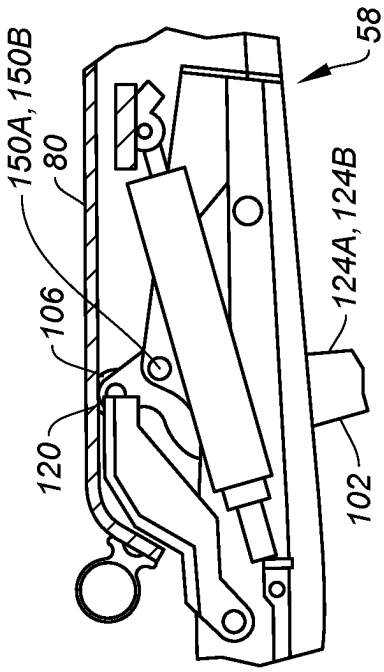

FIG. 9C

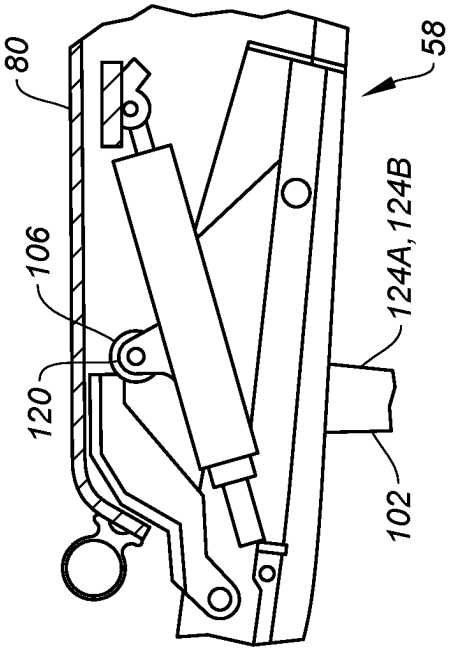

FIG. 9D

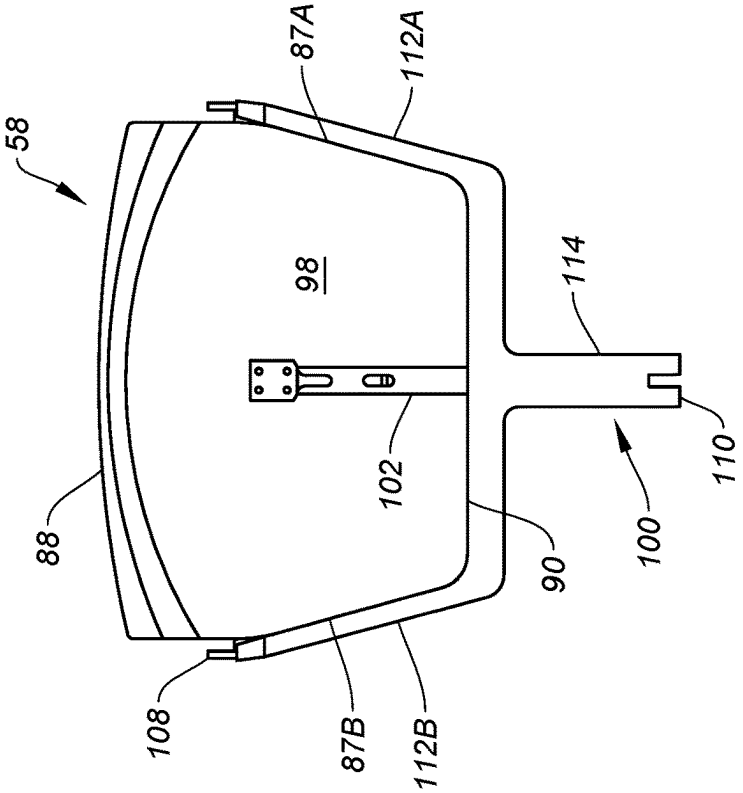
58
87A
112A
98
114
102
110
88
100
90
108
87B
112B

FIG. 11

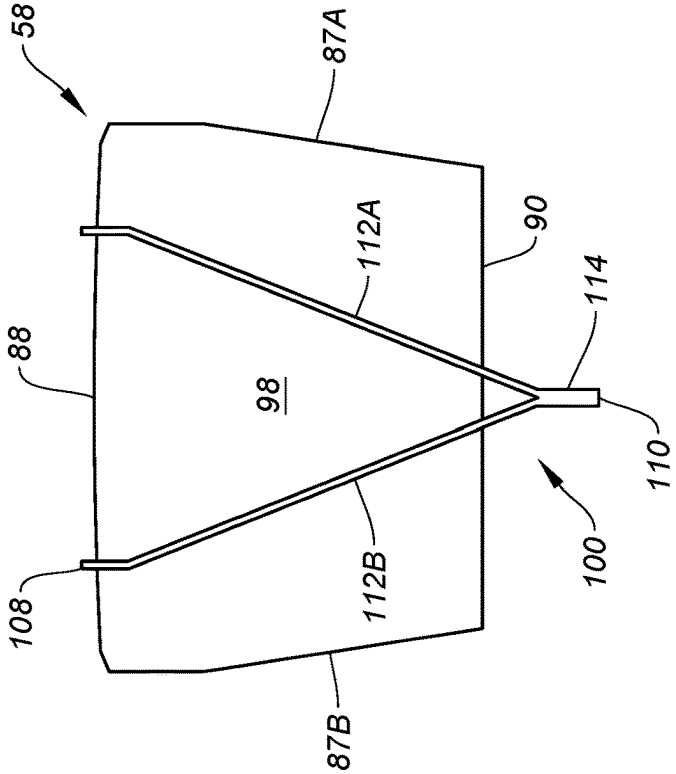
58
87A
90
112A
114
88
98
110
100
108
112B
87B

FIG. 10

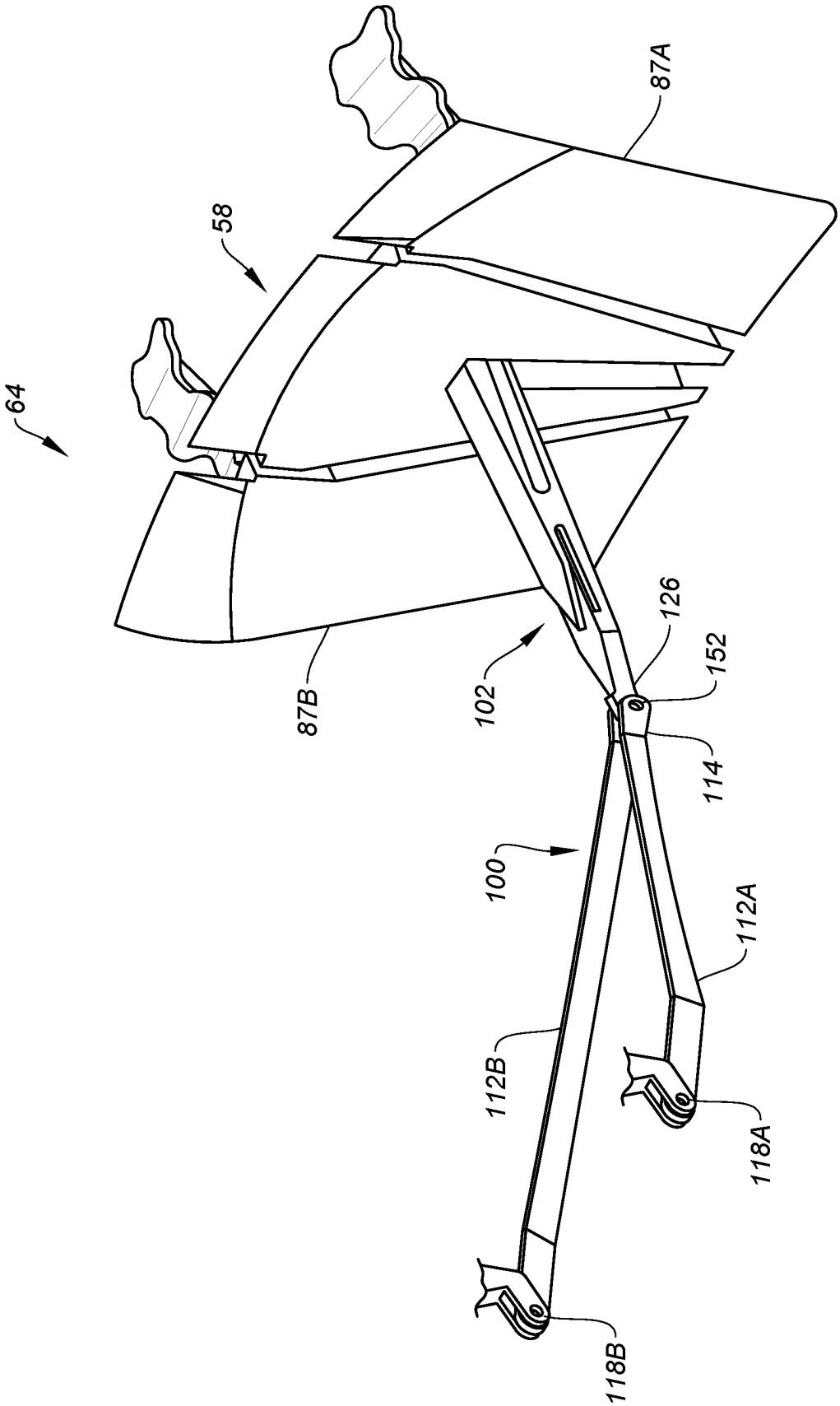

FIG. 12

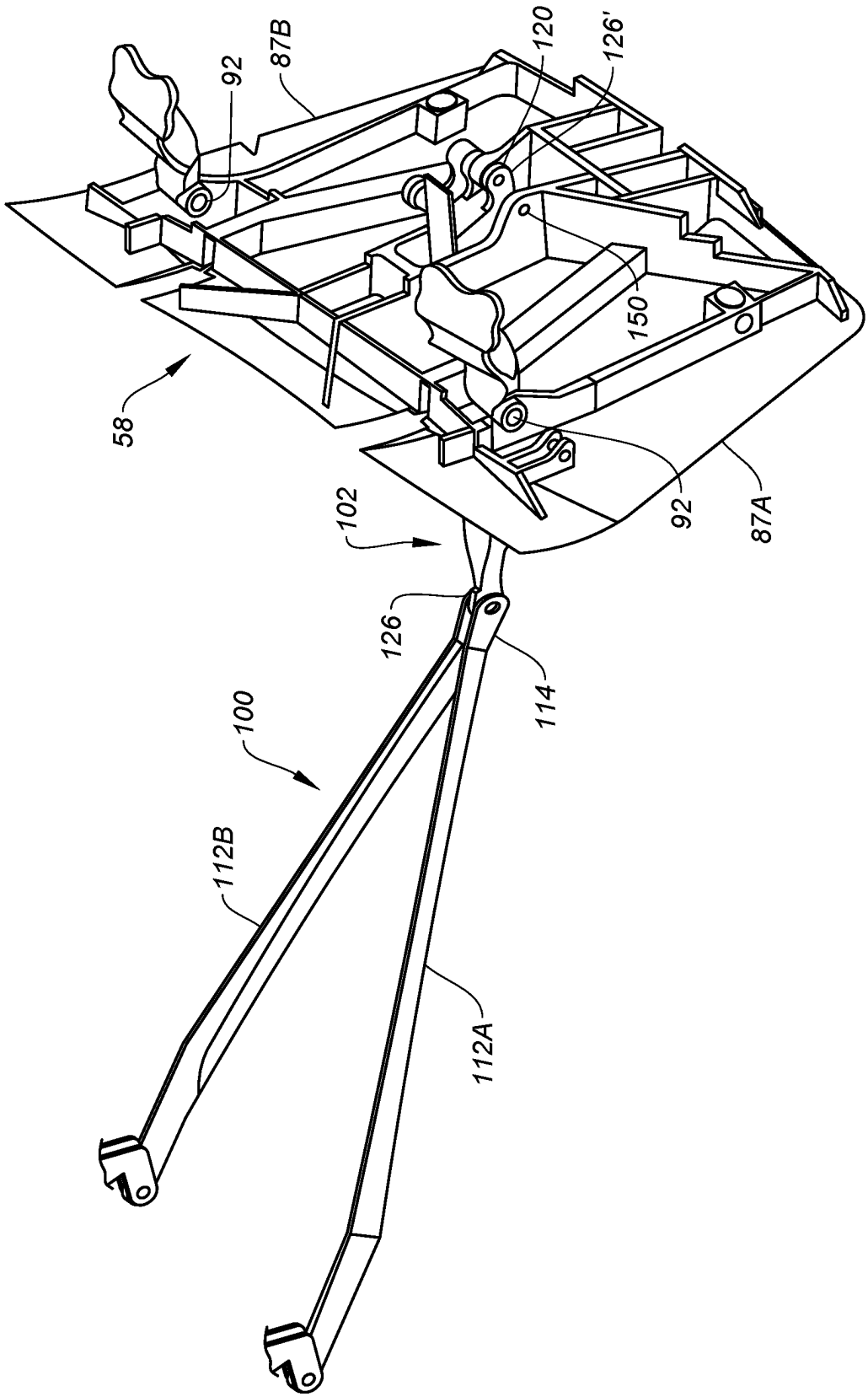

FIG. 13

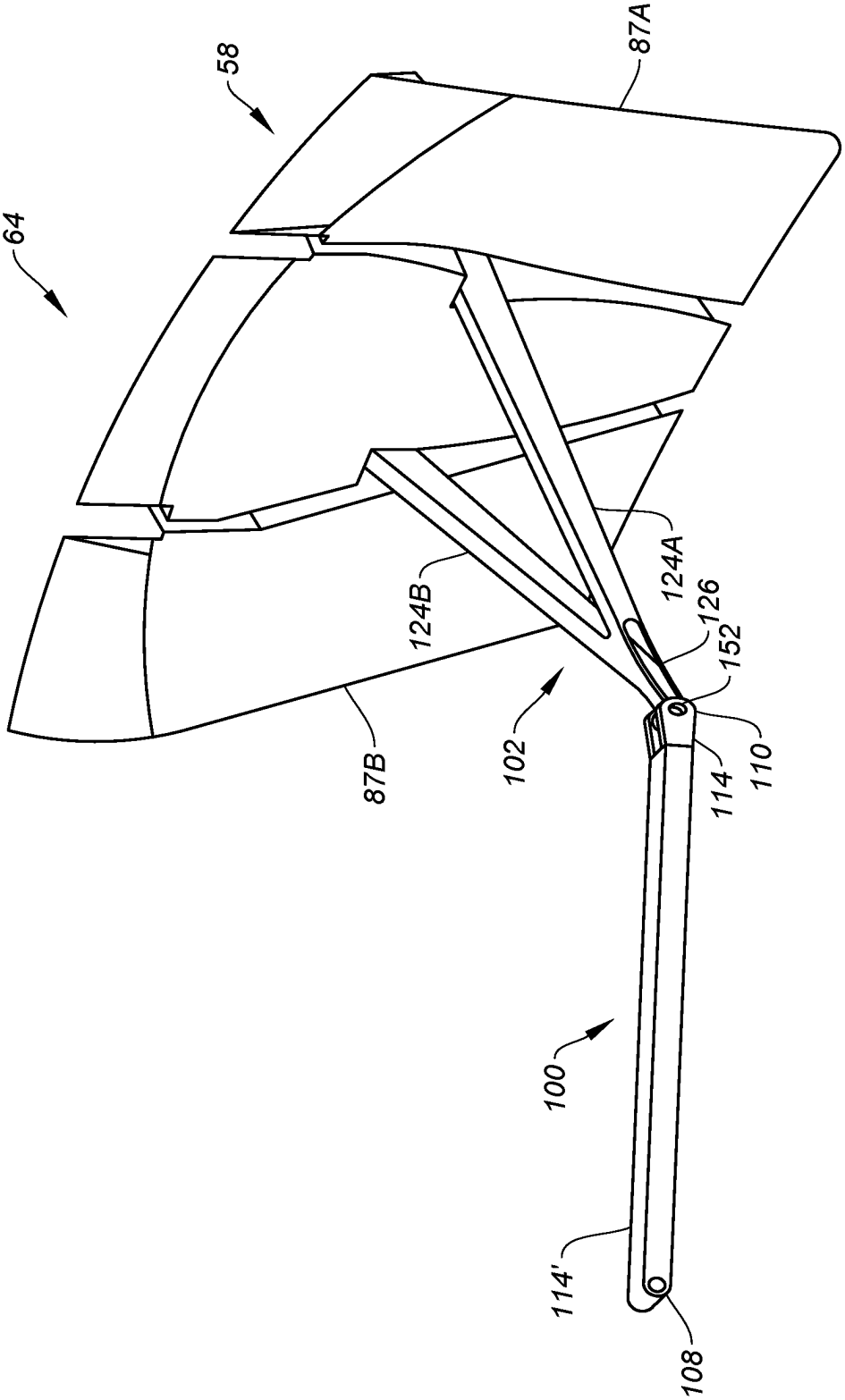

FIG. 14

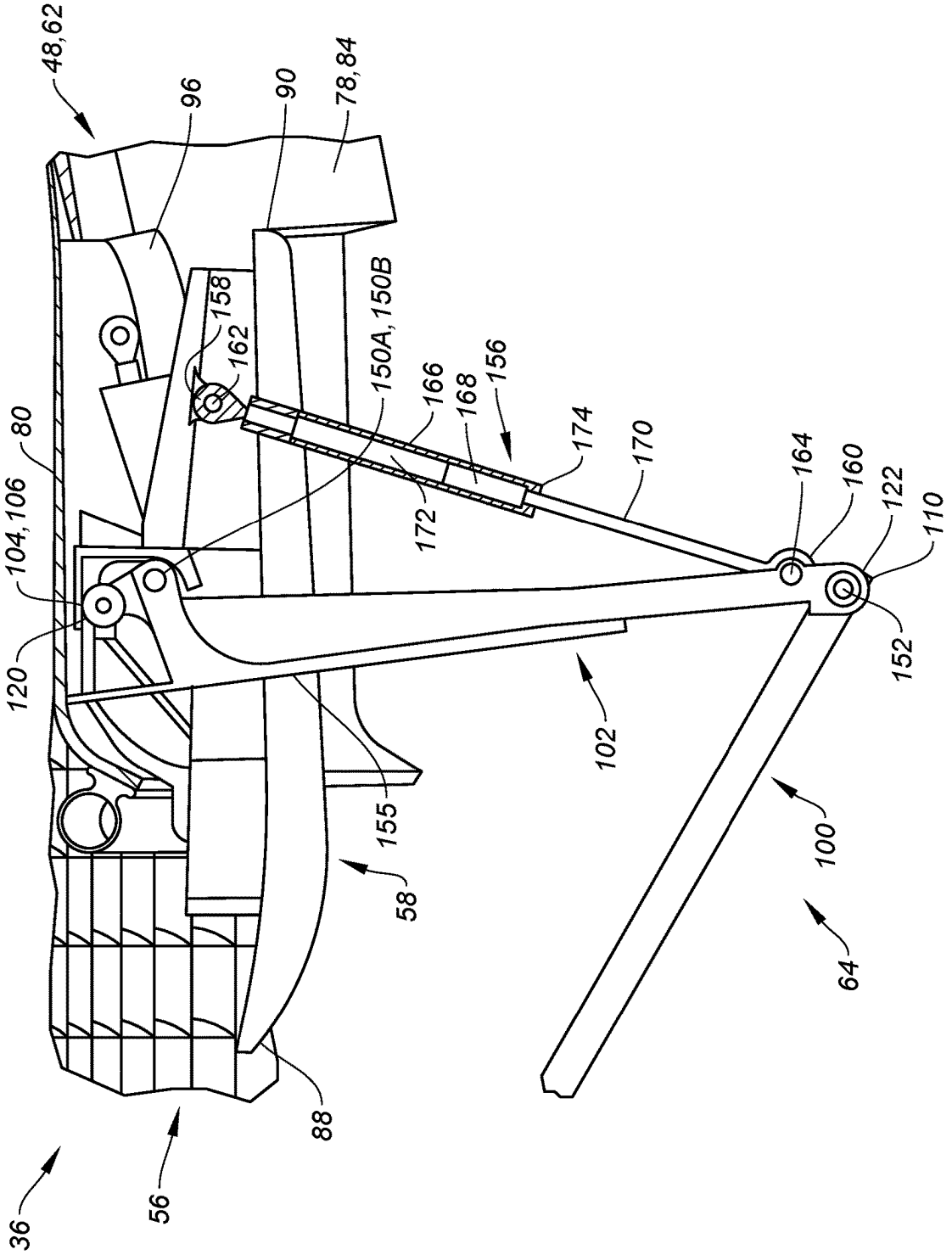
48,62
96
90
78,84
158
162
150A, 150B
166
168
156
174
170
164
160
122
110
80
104,106
172
120
152
102
155
100
58
64
88
36
56

FIG. 15

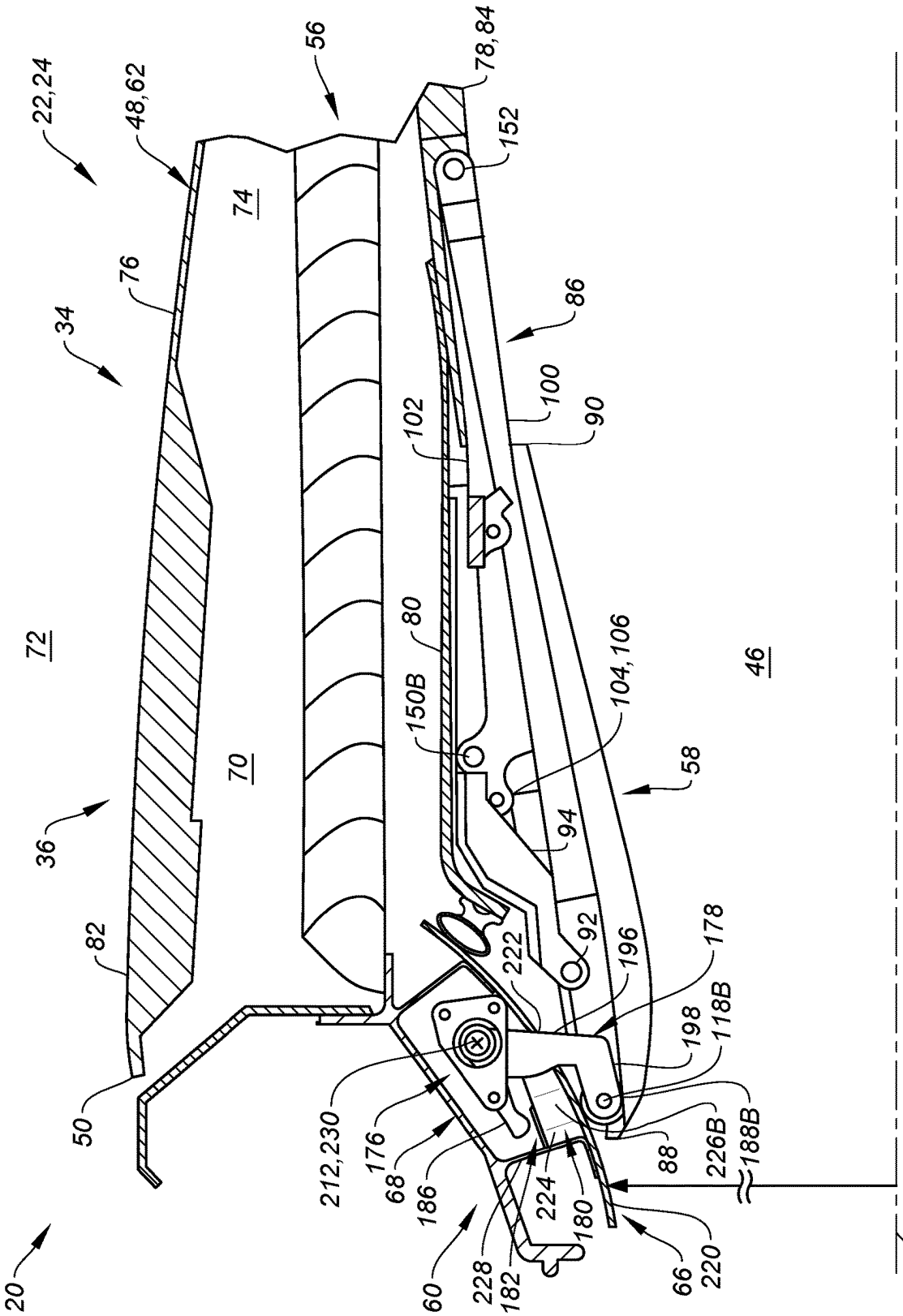
22,24
48,62
56
78,84
152
74
76
34
86
100
90
102
72
80
150B
104,106
46
70
58
36
94
82
92
222
196
178
198
118B
50
212,230
176
68
186
224
180
88
226B
188B
20
60
228
182
66
220
26

FIG. 16

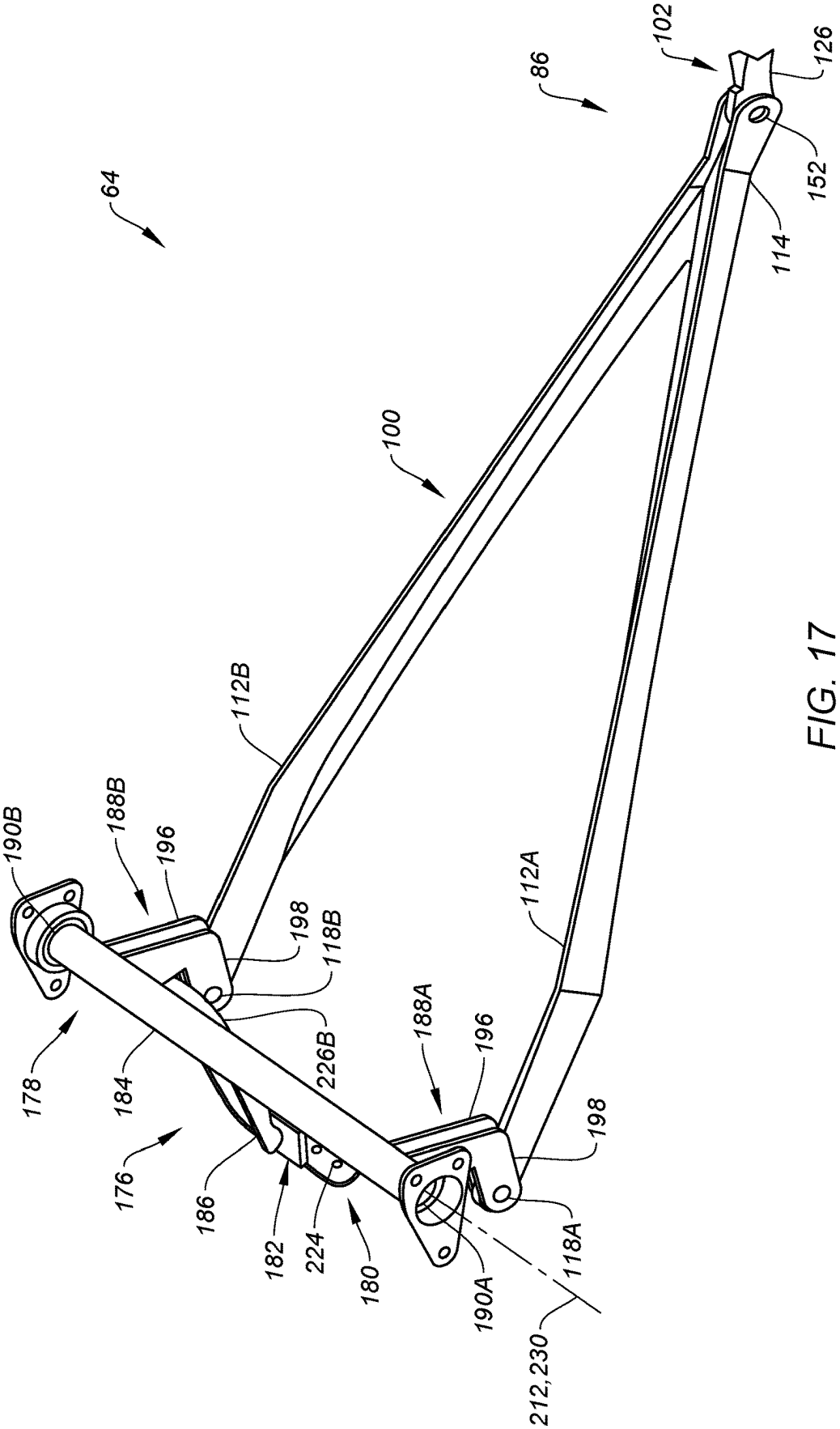
64
86
102
126
152
114
100
112B
112A
190B
188B
196
198
118B
226B
188A
196
198
118A
178
184
176
186
182
224
180
190A
212,230

FIG. 17

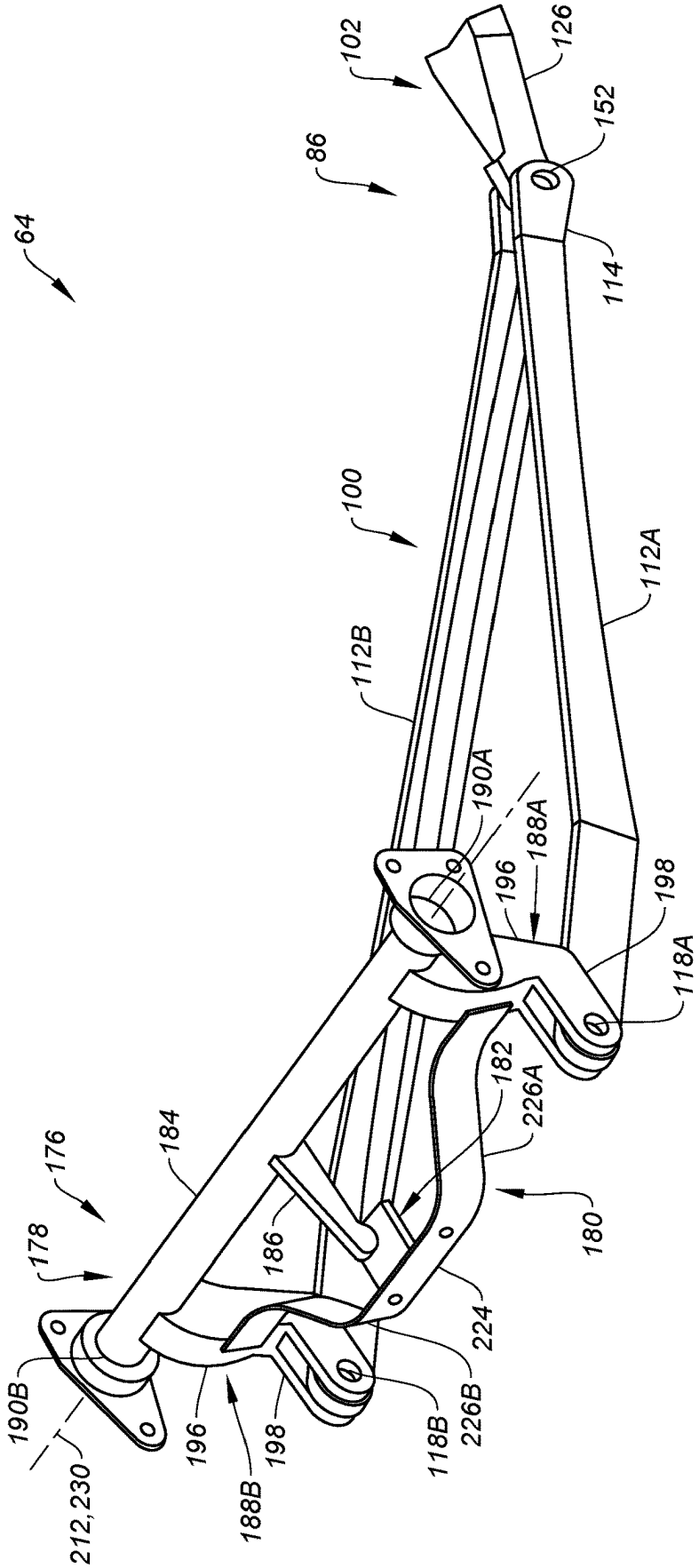
64
102
126
152
86
114
100
112A
112B
190A
188A
196
198
118A
182
226A
184
176
178
186
180
224
190B
212,230
196
188B
198
118B
226B

FIG. 18

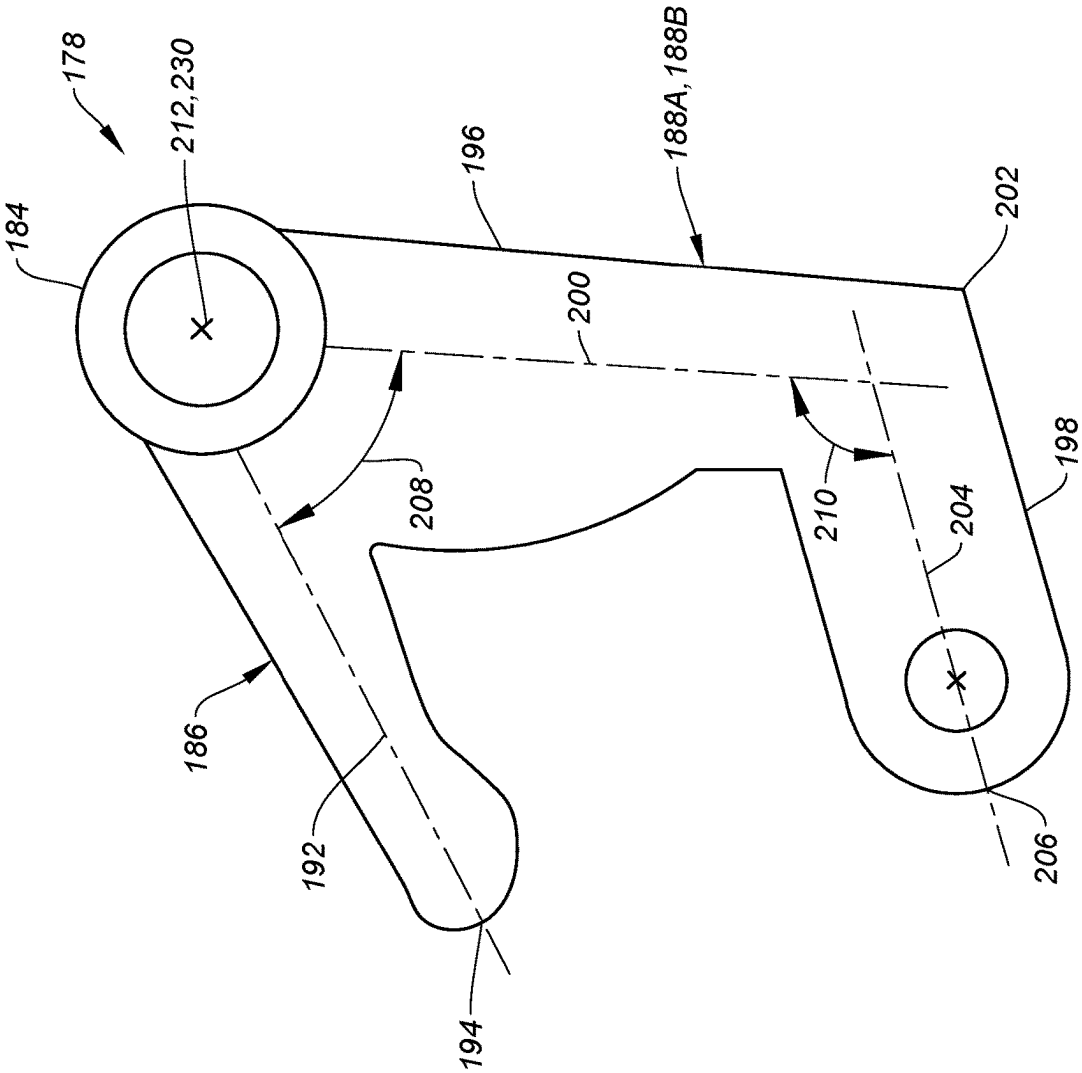
178
184
212,230
196
188A,188B
202
200
208
210
198
204
186
192
194
206

FIG. 19

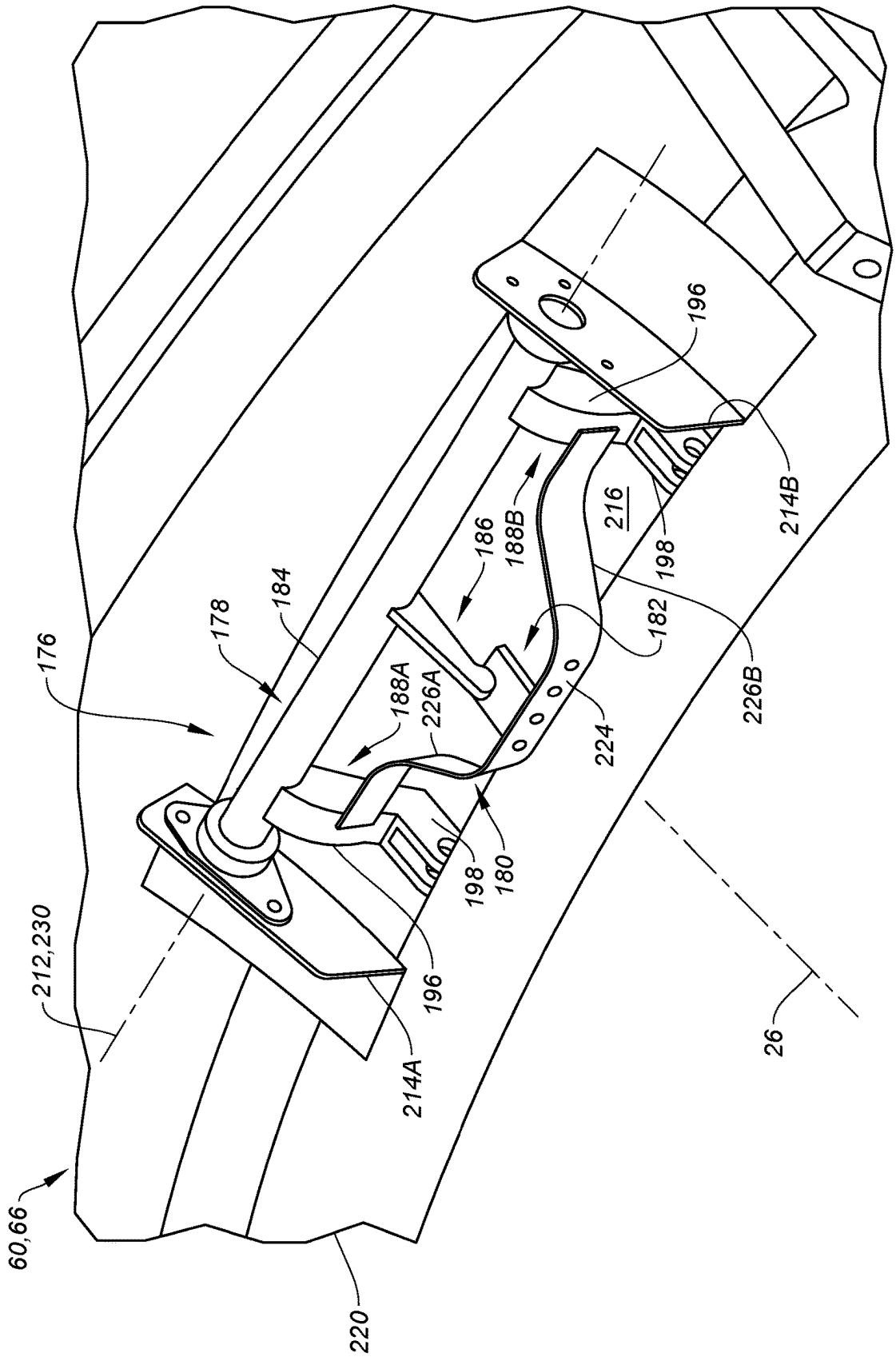
176
178
184
186
188B
216
198
214B
196
182
226B
188A
226A
224
180
198
196
214A
212,230
60,66
220
26

FIG. 20

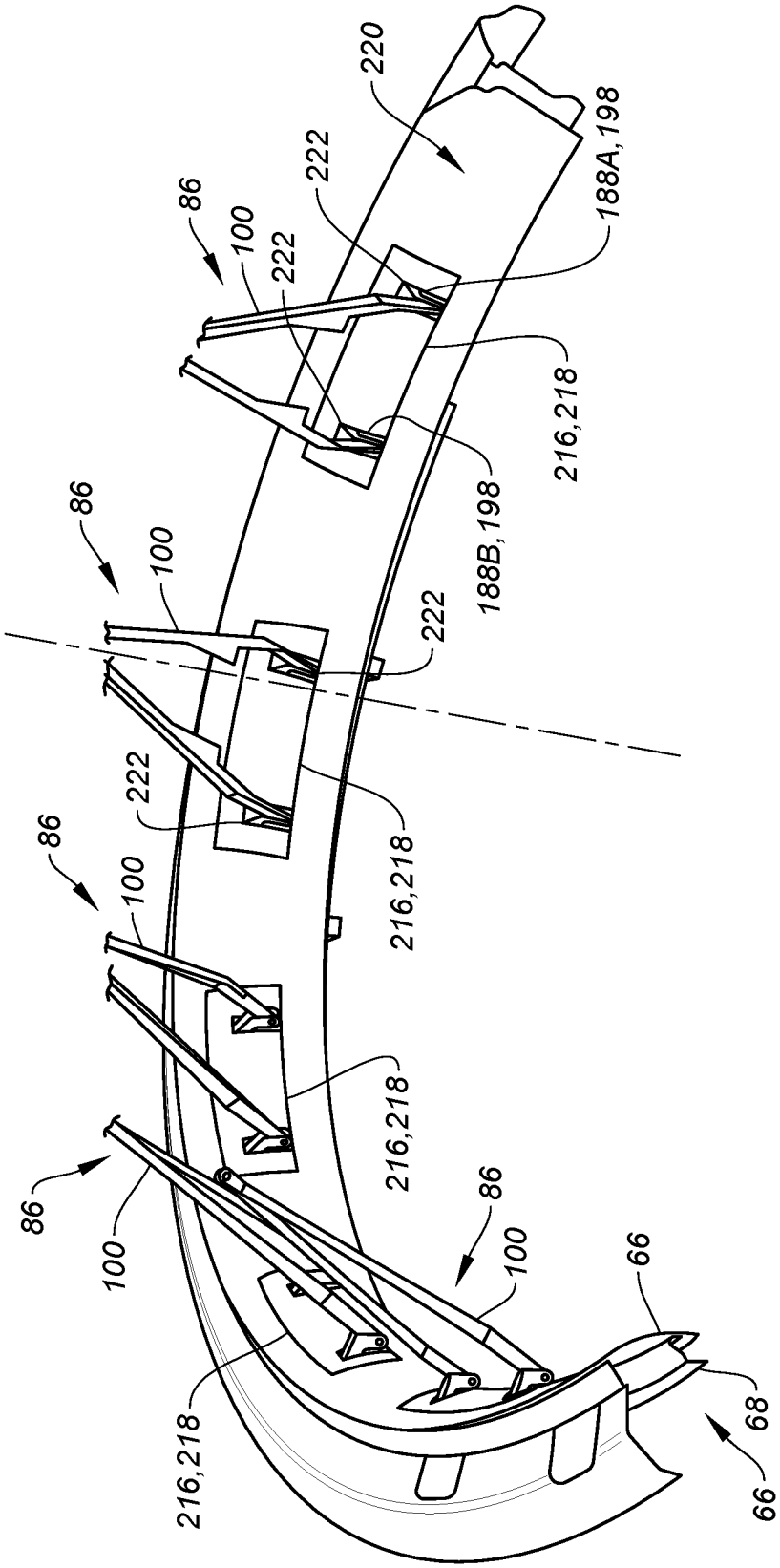
86
100
222
220
188A,198
216,218
188B,198
86
100
222
216,218
86
100
222
216,218
86
100
216,218
86
100
66
68
66
216,218

FIG. 21

THRUST REVERSER WITH LOST MOTION DEVICE

CROSS-REFERENCE TO RELATED APPLICATIONS

This application claims priority to U.S. Provisional Patent Application No. 63/450,293 filed Mar. 6, 2023, which is hereby incorporated herein by reference in its entirety.

BACKGROUND

1. Technical Field

This disclosure relates generally to an aircraft propulsion system and, more particularly, to a thrust reverser for an aircraft propulsion system.

2. Background Information

An aircraft propulsion system may include a thrust reverser to aid in aircraft landing. A typical thrust reverser includes a plurality of blocker doors, which pivot inward into a bypass flowpath from stowed positions to deployed positions. The pivoting of the blocker doors may be facilitated using drag links. A typical drag link is connected to an inner fixed structure at one end, and connected to a respective blocker door at the other end. As a result, even when the thrust reverser is not being used, the drag links extend across the bypass flowpath and thereby increase bypass flowpath drag and reduce engine efficiency during typical aircraft propulsion system operation; e.g., during aircraft cruise. There is a need in the art therefore for an improved thrust reverser with reduced drag.

SUMMARY OF THE DISCLOSURE

According to an aspect of the present disclosure, an assembly is for an aircraft propulsion system. This assembly includes a fixed structure, a translating structure and a thrust reverser. The translating structure is configured to translate between a stowed position and a deployed position. The thrust reverser includes a blocker door, a linkage mount and an actuation linkage. The blocker door is pivotally coupled to the translating structure. The linkage mount includes a mount link, a mount spring and a mount stop. The mount link is pivotally coupled to the fixed structure about a pivot axis. The mount spring is configured to bias the mount link about the pivot axis against the mount stop. The actuation linkage operatively couples the blocker door to the mount link.

According to another aspect of the present disclosure, another assembly is for an aircraft propulsion system. This assembly includes a fixed structure, a translating structure and a thrust reverser. The translating structure is configured to translate between a stowed position and a deployed position. The thrust reverser includes a blocker door, a mount link, a structure link and a door link. The blocker door is pivotally coupled to the translating structure. The mount link is pivotally coupled to the fixed structure about a pivot axis. The mount link is limited to pivoting about the pivot axis a number of degrees equal to or less than thirty degrees. The structure link is between and is pivotally coupled to the mount link and the door link. The door link is between and is pivotally coupled to the structure link and the blocker door.

According to still another aspect of the present disclosure, another assembly is for an aircraft propulsion system. This assembly includes a fixed structure, a translating structure and a thrust reverser. The translating structure is configured to translate between a stowed position and a deployed position. The thrust reverser includes a blocker door, a linkage mount and an actuation linkage. The blocker door is pivotally coupled to the translating structure. The linkage mount includes a mount link, a biasing element and a mount stop. The mount link is pivotally coupled to the fixed structure about a pivot axis. The linkage mount is configured to: limit pivoting of the mount link about the pivot axis in a first direction by the mount stop; and resist and then limit pivoting of the mount link about the pivot axis in a second direction by the biasing element.

The linkage mount is configured to: press the mount link against the stop as the translating structure translates to the deployed position; and press the mount link against the mount spring as the translating structure translates to the stowed position.

The mount spring may be configured as or otherwise include a leaf spring element.

The fixed structure may include a wall. The mount spring and the mount stop may be fixed to the wall.

The mount stop may be formed integral with the mount spring.

The mount link may be configured as or otherwise include a crank.

The mount link may include a stop arm, a linkage arm and a base between and connected to the stop arm and the linkage arm. The stop arm may be configured to abut against the mount stop. The linkage arm may be pivotally coupled to the actuation linkage.

The linkage arm may include a lever section and an offset section that connects the lever section to the base. The lever section may be pivotally coupled to the actuation linkage and meets the offset section at an elbow. The mount spring may engage the offset section.

The thrust reverser may be configured to open a thrust reverser passage when the translating structure is in the deployed position. The fixed structure may include a bullnose configured to provide a smooth aerodynamic transition into the thrust reverser passage. The linkage arm may project through a port in a wall of the bullnose.

The mount link may include a base, a lever section and an offset section. The base may be pivotally coupled to the fixed structure. The lever section may be pivotally coupled to the actuation linkage and may meet the offset section at an elbow. The offset section may project from the base to the lever section.

The mount spring may be configured to abut and press against the offset section.

The thrust reverser may be configured to open a thrust reverser passage when the translating structure is in the deployed position. The fixed structure may include a bullnose configured to provide a smooth aerodynamic transition into the thrust reverser passage. The bullnose may cover the mount spring and the mount stop.

The thrust reverser may be configured to open a thrust reverser passage when the translating structure is in the deployed position. The fixed structure may include a bullnose configured to provide a smooth aerodynamic transition into the thrust reverser passage. The mount link may project through a port in a wall of the bullnose.

The thrust reverser may be configured as a draglink-less thrust reverser.

The actuation linkage may include a structure link and a door link. The structure link may be between and pivotally coupled to the mount link and the door link. The door link may be between and pivotally coupled to the structure link and the blocker door.

The translating structure may form a peripheral boundary of a flowpath. The structure link and the door link may be outside of the flowpath when the translating structure is in the stowed position. The structure link and the door link may be disposed in the flowpath when the translating structure is in the deployed position.

The translating structure may form a first peripheral boundary of a flowpath and the blocker door may form a second peripheral boundary of the flowpath when the translating structure is in the stowed position. The blocker door may project into the flowpath when the translating structure is in the deployed position.

The actuation linkage may include a Y-shaped link pivotally attached to the mount link through a pair of laterally spaced pivot joints between the Y-shaped link and the mount link.

The assembly may also include a fixed cascade structure projecting into an internal cavity of the translating structure when the translating structure is in the stowed position.

The present disclosure may include any one or more of the individual features disclosed above and/or below alone or in any combination thereof.

The foregoing features and the operation of the invention will become more apparent in light of the following description and the accompanying drawings.

BRIEF DESCRIPTION OF THE DRAWINGS

FIG. **1** is a schematic illustration of an aircraft propulsion system with a thrust reverser in a stowed position.

FIG. **2** is a schematic illustration of the aircraft propulsion system with the thrust reverser in a deployed position.

FIG. **3** is a partial side-sectional illustration of an aft portion of the aircraft propulsion system in FIG. **1**.

FIG. **4** is a partial side-sectional illustration of the aft portion of the aircraft propulsion system in FIG. **2**.

FIGS. **5**A-**5**F illustrate a sequence of the thrust reverser moving from a stowed arrangement to a deployed arrangement.

FIG. **6** is a perspective illustration of a deployed blocker door assembly.

FIG. **7** is another perspective illustration of the deployed blocker door assembly.

FIG. **8** is a side illustration of a door link for the blocker door assembly.

FIGS. **9**A-D illustrate another sequence of the thrust reverser moving from the

stowed arrangement towards the deployed arrangement.

FIGS. **10** and **11** are plan view illustrations of a blocker door and a structure link with various arrangements.

FIGS. **12** and **13** are perspective illustrations of another blocker door assembly.

FIG. **15** is a perspective illustration of a portion of the thrust reverser with a variable length strut.

FIG. **14** is a perspective illustration of still another blocker door assembly.

FIG. **16** is a partial side-sectional illustration of the aft portion of the aircraft propulsion system with its thrust reverser in the stowed position.

FIG. **17** is a perspective illustration of a portion of the deployed blocker door assembly with a linkage mount.

FIG. **18** is a perspective illustration of another portion of the deployed blocker door assembly with the linkage mount.

FIG. **19** is a plan view illustration of a mount link.

FIG. **20** is a perspective illustration of a portion of the aircraft propulsion system at a bullnose.

FIG. **21** is another perspective illustration of another portion of the aircraft propulsion system at the bullnose.

DETAILED DESCRIPTION

FIG. **1** illustrates an aircraft propulsion system **20** for an aircraft. The aircraft may be an airplane, a drone (e.g., an unmanned aerial vehicle (UAV)) or any other manned or unmanned aerial vehicle or system. The propulsion system **20** includes a gas turbine engine and a nacelle **22**.

The gas turbine engine is configured to power operation of the propulsion system **20**. The gas turbine engine is also configured to produce thrust to propel the aircraft during flight. For ease of description, the gas turbine engine is generally described below as a turbofan engine such as a high-bypass turbofan engine. The present disclosure, however, is not limited to such an exemplary gas turbine engine. Moreover, while the propulsion system **20** is described as including the gas turbine engine to power operation and produce thrust, it is contemplated the gas turbine engine may be replaced by (or augmented with) one or more propulsor rotors (e.g., fan rotors and/or other air movers) driven by a hybrid-electric power unit or a fully electric power unit.

The nacelle **22** is configured to house and provide an aerodynamic cover for the gas turbine engine. An outer structure **24** of the nacelle **22** extends along an axial centerline **26** from a forward end **28** of the nacelle **22** and its outer structure **24** to an aft end **30** of the nacelle outer structure **24**. The nacelle outer structure **24** of FIG. **1** includes an inlet structure **31**, one or more fan cowls **32** (one such fan cowl visible in FIG. **1**) and an aft structure **34**, which aft structure **34** is configured as part of or otherwise includes a thrust reverser **36** (see also FIG. **2**).

The inlet structure **31** is disposed at the nacelle forward end **28**. The inlet structure **31** is configured to direct a stream of air through an inlet opening **38** at the nacelle forward end **28** and into a fan section of the gas turbine engine.

The fan cowls **32** are disposed axially between the inlet structure **31** and the aft structure **34**. Each fan cowl **32** of FIG. **1**, for example, is disposed at (e.g., on, adjacent or proximate) an aft end **40** of a stationary portion **42** of the nacelle **22**, and extends axially forward to the inlet structure **31**. Each fan cowl **32** is generally axially aligned with the fan section of the gas turbine engine. The fan cowls **32** are configured to provide an aerodynamic covering over a fan case **44** for the fan section. Briefly, this fan case **44** circumscribes the fan rotor and may partially form a forward outer peripheral boundary of a bypass flowpath **46** (see FIGS. **3** and **4**) of the propulsion system **20**.

The term "stationary portion" is used above to describe a portion of the nacelle **22** that is stationary during propulsion system operation (e.g., during takeoff, aircraft flight and landing). However, the stationary portion **42** may be otherwise movable for propulsion system inspection/maintenance; e.g., when the propulsion system **20** is non-operational. Each of the fan cowls **32**, for example, may be configured to provide access to components of the gas turbine engine such as the fan case **44** and/or peripheral equipment configured therewith for inspection, maintenance and/or otherwise. In particular, each fan cowl **32** may be pivotally mounted with the aircraft propulsion system **20** by, for example, a pivoting hinge system. Alternatively, the fan

cowls **32** and the inlet structure **31** may be configured into a single axially translatable body for example. The present disclosure, of course, is not limited to the foregoing fan cowl configurations and/or access schemes.

The aft structure **34** includes a translating sleeve **48** for the thrust reverser **36**. The translating sleeve **48** of FIG. **1** is disposed at the outer structure aft end **30**. This translating sleeve **48** extends axially along the axial centerline **26** between a forward end **50** of the translating sleeve **48** and the outer structure aft end **30**. The translating sleeve **48** is configured to partially form an aft outer peripheral boundary of the bypass flowpath **46** (see FIGS. **3** and **4**).

The translating sleeve **48** may also be configured to form a bypass nozzle **52** for the bypass flowpath **46** with an inner structure **54** of the nacelle **22** (e.g., an inner fixed structure (IFS)), which nacelle inner structure **54** houses a core (e.g., a gas generator) of the gas turbine engine.

The translating sleeve **48** of FIG. **1** includes a pair of sleeve segments **55** (e.g., halves) arranged on opposing sides of the propulsion system **20** (one such sleeve segment visible in FIG. **1**). The present disclosure, however, is not limited to such an exemplary translating sleeve configuration. For example, the translating sleeve **48** may alternatively have a substantially tubular body. For example, the translating sleeve **48** may extend more than three-hundred and thirty degrees (330°) around the axial centerline **26**.

Referring to FIGS. **1** and **2**, the translating sleeve **48** is an axially translatable structure. Each translating sleeve segment **55**, for example, may be slidably connected to one or more stationary structures (e.g., a pylon and a lower bifurcation) through one or more respective track assemblies. Each track assembly may include a rail mated with a track beam; however, the present disclosure is not limited to the foregoing exemplary sliding connection configuration.

With the foregoing configuration, the translating sleeve **48** may translate axially along the axial centerline **26** and relative to the stationary portion **42**. The translating sleeve **48** may thereby move axially between a forward stowed position (e.g., see FIG. **1**) and an aft deployed position (e.g., see FIG. **2**). In the sleeve stowed position, the translating sleeve **48** provides the functionality described above. In the sleeve deployed position, the translating sleeve **48** at least partially (or substantially completely) uncovers at least one or more other components of the thrust reverser **36** such as, but not limited to, a fixed cascade structure **56**. In addition, as the translating sleeve **48** moves from the sleeve stowed position to the sleeve deployed position, one or more blocker doors **58** arranged with the translating sleeve **48** of FIGS. **3** and **4** may be deployed from their stowed position (e.g., see FIG. **3**) to their deployed position (e.g., see FIG. **4**) to divert bypass air from the bypass flowpath **46** and through the cascade structure **56** to provide reverse thrust.

FIG. **3** is a partial side sectional illustration of an assembly for the propulsion system **20** with the thrust reverser **36** in a stowed arrangement. FIG. **4** is a partial side sectional illustration of the assembly with the thrust reverser **36** in a deployed arrangement. This assembly of FIGS. **3** and **4** includes a nacelle fixed structure **60**, a nacelle translating structure **62** and a thrust reverser blocker door assembly **64**.

The fixed structure **60** is located at the aft end **40** of the stationary portion **42** of the nacelle outer structure **24**. Referring to FIG. **4**, the fixed structure **60** includes a bullnose **66** and an internal nacelle support structure **68**; e.g., a torque box.

The bullnose **66** is configured to provide a smooth aerodynamic transition from the bypass flowpath **46** to a thrust reverser passage **70**. This thrust reverser passage **70** is opened (e.g., uncovered, formed, etc.) when the thrust reverser **36** is in its deployed arrangement. The thrust reverser passage **70** is bounded axially by and extends axially within the nacelle outer structure **24** between the nacelle support structure **68** and the translating structure **62**. The thrust reverser passage **70** extends radially through the nacelle outer structure **24** and across the cascade structure **56** from the bypass flowpath **46** to an environment **72** external to the propulsion system **20** and its nacelle **22**.

The nacelle support structure **68** extends circumferentially about (e.g., circumscribes) and supports the bullnose **66**. The nacelle support structure **68** also provides a base to which the cascade structure **56** may be (e.g., fixedly) mounted. The cascade structure **56** may thereby project axially aft from the nacelle support structure **68**. With such a configuration, when the translating structure **62** is in the stowed position of FIG. **3**, the cascade structure **56** may be located within an internal cavity **74** of the translating structure **62**. When the translating structure **62** is in the deployed position of FIG. **4**, the cascade structure **56** is uncovered and located within the thrust reverser passage **70**.

The translating structure **62** is configured as or otherwise includes the translating sleeve **48**. The translating sleeve **48** of FIGS. **3** and **4** includes an outer panel **76**, an inner panel **78** and an internal support structure **80**. The outer panel **76** is configured to form a portion of an outer aerodynamic surface **82** of the nacelle **22** adjacent the bypass nozzle **52** (see FIG. **1**). A radial inner surface **84** of the inner panel **78** is configured to form the outer peripheral boundary of the bypass flowpath **46** adjacent the bypass nozzle **52**. The internal support structure **80** is positioned radially between the outer panel **76** and the inner panel **78**. The internal support structure **80** is disposed with the internal cavity **74**. The internal cavity **74** is radially located between and may be formed by the outer panel **76** and the inner panel **78**. The internal cavity **74** projects axially aft partially into the translating sleeve **48** from its forward end **50**.

Referring to FIGS. **5**A-F, the door assembly **64** includes the one or more blocker doors **58** arranged circumferentially about the axial centerline **26**. The door assembly **64** also includes at least (or only) one door actuation linkage **86** associated with each blocker door **58**.

Referring to FIGS. **6** and **7**, each blocker door **58** extends laterally between opposing lateral sides **87**A and **87**B (generally referred to as "**87**") of the respective blocker door **58**. Here, the lateral direction may be a circumferential direction about the axial centerline **26** (see FIG. **3**) when the respective blocker door **58** is in its door stowed position of FIG. **5**A. Each blocker door **58** extends longitudinally from a longitudinal first end **88** of the respective blocker door **58** to a longitudinal second end **90** of the respective blocker door **58**. Here, the longitudinal direction may be a substantially axial direction along the axial centerline **26** (see FIG. **3**) when the respective blocker door **58** is in its door stowed position of FIG. **5**A, and a substantially radial direction relative to the axial centerline **26** when the respective blocker door **58** is in its door deployed position of FIG. **5**F. The door first end **88** may thereby be an axial upstream, forward end of the respective blocker door **58** when that blocker door **58** is in its stowed position of FIG. **5**A, and a radial outer end of the respective blocker door **58** when that blocker door **58** is in its deployed position of FIG. **5**F. Similarly, the door second end **90** may be an axial downstream, aft end of the respective blocker door **58** when that blocker door **58** is in its stowed position of FIG. **5**A, and a radial inner end of the respective blocker door **58** when that blocker door **58** is in its deployed position of FIG. **5**F.

Referring to FIGS. **3** and **4**, each blocker door **58** is pivotally coupled to the translating sleeve **48**. Each blocker door **58** of FIGS. **3** and **4**, for example, is pivotally attached to the internal support structure **80** at one or more door pivot joints **92**; e.g., via one or more hinges **94** fixed to the internal support structure **80**. These door pivot joints **92** may be located at or near the opposing door sides **87** (see FIGS. **6** and **7**). The door pivot joints **92** may also be located at or near the door first end **88**. With this arrangement, referring to FIGS. **5**A-F, each blocker door **58** is configured to move (e.g., pivot) radially inwards into the bypass flowpath **46** from its door stowed position of FIG. **5**A to its door deployed position of FIG. **5**F. In the stowed position of FIG. **5**A, each blocker door **58** may be mated with (e.g., nested in) a respective pocket **96** in the translating sleeve **48** and its inner panel **78**. Here, a side surface **98** (e.g., a radial inner surface) of each blocker door **58** of FIG. **5**A may be arranged substantially flush with the inner panel inner surface **84**. Each blocker door **58** may thereby also form a respective outer peripheral boundary of the bypass flowpath **46** when stowed. By contrast, in the deployed position of FIG. **5**F, each blocker door **58** projects radially inward towards the axial centerline **26** (see FIG. **4**) from the translating sleeve **48** and into the bypass flowpath **46**. Each blocker door **58** may thereby partially block passage to the bypass nozzle **52** (see FIG. **1**) when deployed.

Referring to FIGS. **6** and **7**, each actuation linkage **86** may be configured as a folding linkage such as a bi-folding linkage; e.g., a scissor linkage. The door actuation linkage **86** of FIGS. **6** and **7**, for example, includes a rigid, unitary structure link **100** and a rigid, unitary door link **102**. This door actuation linkage **86** of FIG. **7** may also include one or more guides **104**. For ease of description, each guide **104** is described below as a roller **106**. Each guides **104**, however, may alternatively be configured as a slider, a moveable carriage, a track and guide assembly, or the like.

The structure link **100** of FIGS. **6** and **7** extends longitudinally from a longitudinal first end **108** of the structure link **100** to a longitudinal second end **110** of the structure link **100**. Here, the longitudinal direction may be a substantially axial direction along the axial centerline **26** (see FIG. **3**) when the respective blocker door **58** is in its door stowed position of FIG. **5**A, and a substantially radial direction relative to the axial centerline **26** (see FIG. **4**) when the respective blocker door **58** is in its door deployed position of FIG. **5**F. The structure link first end **108** may thereby be an axial forward end of the structure link **100** when the respective blocker door **58** is in its stowed position of FIG. **5**A, and a radial outer end of the structure link **100** when the respective blocker door **58** is in its deployed position of FIG. **5**F. Similarly, the structure link second end **110** may be an axial aft end of the structure link **100** when the respective blocker door **58** is in its stowed position of FIG. **5**A, and a radial inner end of the structure link **100** when the respective blocker door **58** is in its deployed position of FIG. **5**F.

Referring to FIGS. **6** and **7**, the structure link **100** may be configured as a forked link; e.g., a Y-shaped link. The structure link **100** of FIGS. **6** and **7**, for example, includes a first structure link arm **112**A, a second structure link arm **112**B and a structure link mount **114**. The first structure link arm **112**A is disposed to a lateral first side of the structure link **100**. The second structure link arm **112**B is disposed to a lateral second side of the structure link **100**. Each of the structure link arms **112**A, **112**B (generally referred to as "**112**") is connected to (e.g., formed integral with or otherwise fixed to) the structure link mount **114**. Each of the structure link arms **112** of FIGS. **6** and **7**, for example, projects longitudinally out from the structure link mount **114** to the structure link first end **108**. The structure link arms **112** may laterally converge towards one another as these structure link arms **112** extends longitudinally towards the structure link mount **114** and the respective blocker door **58**; e.g., when the respective blocker door **58** is deployed. More particularly, the structure link arms **112** of FIGS. **6** and **7** laterally converge to the structure link mount **114** as these structure link arms **112** extends longitudinally from (or about) the structure link first end **108** to the structure link mount **114**. Here, the first structure link arm **112**A and the second structure link arm **112**B are angularly offset at the structure link mount **114** by an included angle **116**. This included angle **116** may be an acute angle between, for example, twenty degrees (20°) and sixty degrees (60°); e.g., between thirty degrees (30°) and forty degrees (40°).

Referring to FIG. **5**F, the structure link **100** is pivotally coupled to the fixed structure **60** at its structure link first end **108**. Each structure link arm **112** of FIG. **5**F, for example, is pivotally attached to the fixed structure **60** at a respective structure link arm pivot joint **118**A, **118**B (generally referred to as "**118**"); e.g., via a hinge or a clevis connection fixed to the fixed structure **60** and projecting out from the bullnose **66**. Here, the structure link mount **114** is located at a laterally intermediate position (e.g., centered) between the structure link arm pivot joints **118**.

Referring to FIGS. **6** and **7** (see also FIG. **8**), the door link **102** extends longitudinally from a longitudinal first end **120** of the door link **102** (see FIG. **7**) to a longitudinal second end **122** of the door link **102** (see FIG. **6**). Here, the longitudinal direction may be a substantially axial direction along the axial centerline **26** (see FIG. **3**) when the respective blocker door **58** is in its door stowed position of FIG. **5**A, and a substantially radial direction relative to the axial centerline **26** (see FIG. **4**) when the respective blocker door **58** is in its door deployed position of FIG. **5**F. The door link first end **120** may thereby be an axial forward end of the door link **102** when the respective blocker door **58** is in its stowed position of FIG. **5**A, and a radial outer and axial aft end of the door link **102** when the respective blocker door **58** is in its deployed position of FIG. **5**F. Similarly, the door link second end **122** may be an axial aft end of the door link **102** when the respective blocker door **58** is in its stowed position of FIG. **5**A, and a radial inner and axial forward end of the door link **102** when the respective blocker door **58** is in its deployed position of FIG. **5**F.

Referring to FIGS. **6** and **7**, the door link **102** may be configured as a forked crank; e.g., a Y-shaped crank. The door link **102** of FIG. **6**, for example, includes a first door link arm **124**A, a second door link arm **124**B and a door link mount **126**. The first door link arm **124**A is disposed to a lateral first side of the door link **102**. The second door link arm **124**B is disposed to a lateral second side of the door link **102**. Each of the door link arms **124**A, **124**B (generally referred to as "**124**") is connected to (e.g., formed integral with or otherwise fixed to) the door link mount **126**. Each of the door link arms **124** of FIGS. **6** and **7**, for example, projects longitudinally out from the door link mount **126** to the door link first end **120**. The door link arms **124** may laterally converge towards one another as these door link arms **124** extends longitudinally towards the door link mount **126** and away from the respective blocker door **58**; e.g., when the respective blocker door **58** is deployed. More particularly, the door link arms **124** of FIGS. **6** and **7** laterally converge to the door link mount **126** as these door link arms **124** extends longitudinally from (or about) the door link first end **120** to the door link mount **126**. Here, the

first door link arm **124**A and the second door link arm **124**B of FIG. **6** are angularly offset at the door link mount **126** by an included angle **128**. This included angle **128** may be an acute angle between, for example, twenty degrees (20°) and sixty degrees (60°); e.g., between thirty degrees (30°) and forty degrees (40°).

Referring to FIG. **8**, each door link arm **124** may be configured as a crank arm. Each door link arm **124** of FIG. **8**, for example, includes a first lever section **130**, a second lever section **132** and an offset section **134**. The first lever section **130** extends along a (e.g., straight line or slightly curved) first lever section trajectory **136** from the door link mount **126** to a first elbow **138** where the first lever section **130** meets and is connected to (e.g., formed integral with) a first end of the offset section **134**. The second lever section **132** extends along a (e.g., straight line or slightly curved) second lever section trajectory **140** from the door link first end **120** to a second elbow **142** where the second lever section **132** meets and is connected to (e.g., formed integral with) a second end of the offset section **134**. This second lever section trajectory **140** may be parallel with or (e.g., slightly) angularly offset from the first lever section trajectory **136**. The offset section **134** extends along a (e.g., straight line or slightly curved) offset section trajectory **144** from the first elbow **138** to the second elbow **142**. The offset section trajectory **144** is angularly offset from the first lever section trajectory **136** at the first elbow **138** by a first offset angle **146**. The offset section trajectory **144** is angularly offset from the second lever section trajectory **140** at the second elbow **142** by a second offset angle **148**, which second offset angle **148** may be equal to or different than the first offset angle **146**. Each offset angle **146**, **148** of FIG. **8** is between eighty degrees (80°) and one-hundred degrees (100°); e.g., ninety degrees (90°). The present disclosure, however, is not limited to such exemplary offset angles and may vary depending upon the specific thrust reverser arrangement.

Referring to FIG. **7**, the door link **102** is pivotally coupled to the respective blocker door **58** at (or near) its door link first end **120**. Each door link arm **124** of FIG. **7**, for example, is pivotally attached to the respective blocker door **58** at a respective door link arm pivot joint **150**A, **150**B (generally referred to as "**150**"); e.g., via a hinge or a clevis connection fixed to the respective blocker door **58**. The door link arm pivot joint **150** of FIG. **7** is located at the second elbow **142** (see FIG. **8**) and may be disposed at a longitudinal intermediate location (e.g., approximately centered) between the door first end **88** and the door second end **90**. The door link arm pivot joint **150** may also be located radially outboard (e.g., radially outside) of the blocker door side surface **98** (see FIG. **3**) when the respective blocker door **58** stowed. The roller **106** of FIG. **8** is rotatably connected to the respective door link arm **124** and its second lever section **132** at the door link first end **120**; e.g., via a roller joint. The door link mount **126** of FIG. **6** is located at a laterally intermediate position (e.g., centered) between the door link arm pivot joints **150** and/or the rollers **106** of FIG. **7**. While the intermediate position is shown as being centered in FIG. **7**, it is contemplated the intermediate position may alternatively be (e.g., slightly) offset to one side (e.g., towards **87**A) or the other side (e.g., towards **87**B).

Each door link arm **124** of FIGS. **6** and **7** projects through a respective aperture (e.g., a port) in the respective blocker door **58** from the door link first end **120** to the door link mount **126**. The door link mount **126** of FIG. **6** is pivotally coupled to the structure link mount **114**. The door link mount **126** of FIG. **6**, for example, is pivotally attached to the structure link mount **114** via a mount pivot joint **152**; e.g., via a hinge or a clevis connection. The door link **102** of FIG. **4** thereby operatively couples the respective blocker door **58** to the structure link **100**. The structure link **100** operatively couples the fixed structure **60** to the door link **102**.

FIGS. **5**A-F illustrate a sequence of the thrust reverser **36** deploying, where the translating sleeve **48** is in its stowed position in FIG. **5**A and is in its deployed position in FIG. **5**F. In the stowed arrangement of FIG. **5**A, each blocker door **58** is nested within its respective pocket **96** in the translating sleeve **48**. In addition, each door actuation linkage **86** is folded and each door actuation linkage **86** and its members are nested in channels **154**A and **154**B in the respective blocker door **58** (see FIG. **6**) and the translating sleeve **48**. Moreover, each door link **102** may be nested within the respective structure link **100**. With this arrangement, each door actuation linkage **86** and its members **100** and **102** may be tucked away and out of the bypass flowpath **46** when the thrust reverser **36** is not being used. Here, each structure link **100** borders and is exposed to the bypass flowpath **46**. Each structure link **100** may also cover the respective door link **102** (with respect to the bypass flowpath **46**), where the door link **102** is arranged radially between the respective structure link **100** and the respective blocker door **58**. By contrast, a drag link of a typical prior art thrust reverser extends across a bypass duct even when the thrust reverser is not being used, which increases drag and, thus, reduces engine efficiency during nominal operation.

During deployment, movement of each blocker door **58** is actuated by axial movement of the translating structure **62** and its translating sleeve **48**. In particular, as the translating sleeve **48** moves axially aft from its stowed position towards the deployed position, the translating sleeve **48** pulls the blocker doors **58** aft. To compensate for the increased axial distance between the blocker doors **58** and the fixed structure **60**, each door actuation linkage **86** begins to unfold. More particularly, referring to FIGS. **6** and **7**, the structure link second end **110** pivots about the structure link arm pivot joint **118** and moves radially inward. The door link second end **122** correspondingly pivots about the door link arm pivot joint **150** (see FIG. **7**) and moves radially inward. This pivoting of the door link **102**, in turn, causes the door link first end **120** of FIGS. **9**A-D to also pivot about the door link arm pivot joint **150**. Each roller **106** simultaneously pushes radially against the internal support structure **80**, which causes the door link arm pivot joint **150** and, thus, the respective blocker door **58** to move radially inward and away from the internal support structure **80**. More particularly, the engagement of each roller **106** against the internal support structure **80** causes the door link second end **122** of FIG. **6** to pivot about the door link arm pivot joint **150** of FIG. **7** and move radially inward. Each door actuation linkage **86** of FIGS. **5**A-F is thereby configured to initiate movement (e.g., pivoting) of the respective blocker door **58** substantially simultaneously (e.g., +/− time associated with standard industry engineering tolerances) with the initiation of the aft translation of the translating sleeve **48** from the sleeve stowed position towards the sleeve deployed position. In other words, the elements **62** and **64** are configured to begin moving at the same time.

Referring to FIGS. **9**A-D, each roller **106** continues to cause the respective blocker door **58** to pivot inward until each door link arm **124** reaches and engages a respective stop **155** (e.g., bumper) (see FIG. **6**) configured into the respective blocker door **58** associated with an intermediate position of the translating sleeve **48**; e.g., see FIGS. **5**C and **9**D. Once each door link arm **124** reaches and engages its

respective stop **155** (see FIG. **6**), the door link **102** no longer moves relative to the respective blocker door **58** as shown in FIGS. **5**C-F. Rather, the door link **102** functions as a fixed member of the respective blocker door **58**. The door link **102** thereby pivots the respective blocker door **58** radially inwards into the bypass flowpath **46** without moving relative to that blocker door **58**.

It is worth noting, referring to FIG. **3**, each door pivot joint **92** may be located radially inward of each door link arm pivot joint **150** when the thrust reverser **36** and its elements are stowed. This configuration can be implemented because each door link **102** and its associated rollers **106** (sec FIGS. **9**A-D) may push the respective door actuation linkage **86** radially inward as described above and, thereby, prevent the door actuation linkage **86** from binding.

In some embodiments, referring to FIG. **10**, each structure link arm **112**A, **112**B may be laterally spaced from a corresponding lateral door side **87**A, **87**B; e.g., laterally towards the other structure link arm **112**B, **112**A. In other embodiments, referring to FIG. **11**, each structure link arm **112**A, **112**B may be located at (e.g., adjacent and just outside of) a corresponding lateral door side **87**A, **87**B. With this arrangement, each structure link **100** wraps around and does not extend laterally and/or longitudinally across the respective blocker door **58** or its surface **98**.

Each link **100**, **102** is described above as a single, monolithic body. It is contemplated, however, the (e.g., Y-shaped) structure link **100** and/or the (e.g., Y-shaped) door link **102** may alternatively be configured as a pair of side-by-side members which collectively form the respective link **100**, **102**.

Referring to FIGS. **6** and **7**, the Y-shaped configuration of each structure link **100** and the Y-shaped configuration of each door link **102** may reduce or prevent lateral movement of the respective door actuation linkage **86** (e.g., at the mount pivot joint **152**) during deployment. This may be particularly useful when the propulsion system **20** is subject to vibrations or the like. The present disclosure, however, is not limited to such an exemplary arrangement. For example, referring to FIGS. **12** and **13**, each door link **102** may be configured as a single strut; e.g., a linear, non-forked body. Here, the door link **102** of FIG. **13** includes a single door link mount **126'** at its door link first end **120** pivotally coupled to the respective blocker door **58**. This door link mount **126'** may be laterally centered between the opposing door lateral sides **87**A and **87**B. In another example, referring to FIG. **14**, each door link **102** may be configured as a single strut; e.g., a linear, non-forked body. Here, the structure link **100** includes a single structure link mount **114'** at its structure link first end **108** pivotally coupled to the fixed structure **60** (see FIG. **3**).

In some embodiments, referring to FIG. **15**, each blocker door assembly **64** may also include a variable length strut **156**. This variable length strut **156** extends longitudinally from a first end **158** of the variable length strut **156** to a second end **160** of the variable length strut **156**. The variable length strut **156** is pivotally coupled to the respective blocker door **58** at (or near) the strut first end **158**. The variable length strut **156** of FIG. **15**, for example, is pivotally attached to the respective blocker door **58** at a door-strut pivot joint **162**; e.g., via a hinge or a clevis connection fixed to the respective blocker door **58**. This door-strut pivot joint **162** may be located radially inboard of the door link arm pivot joint **150** (e.g., when the respective blocker door **58** is stowed). The door-strut pivot joint **162** is located axially between the door link arm pivot joint **150** and the door second end **90** (e.g., when the respective blocker door **58** is stowed). The variable length strut **156** is pivotally coupled to the respective door link **102** at (or near) the strut second end **160**. The variable length strut **156** of FIG. **15**, for example, is pivotally attached to the respective door link **102** at a link-strut pivot joint **164**; e.g., via a hinge or a clevis connection fixed to the respective door link **102**. This link-strut pivot joint **164** may be disposed at (or near) the door link second end **122**; e.g., slightly space longitudinally inboard from the mount pivot joint **152**.

The variable length strut **156** may be configured as a cartridge stop and/or a damper. For example, the variable length strut **156** of FIG. **15** includes a cylindrical housing **166**, an internal body **168** (e.g., a piston) and a rod **170**. The cylindrical housing **166** is disposed at the strut first end **158**. The internal body **168** is disposed within and is configured to slide longitudinally within an internal bore **172** of the cylindrical housing **166**. The rod **170** is connected to the internal body **168**, and the rod **170** projects longitudinally out from the cylindrical housing **166** to the strut second end **160**. A stroke of movement of the internal body **168** within the cylindrical housing **166** may be tuned such that the internal body **168** engages (e.g., abuts against, contacts, etc.) an annular endwall **174** of the cylindrical housing **166** when (or slightly before) the respective door link **102** would engage the respective stop **155**. The variable length strut **156** may thereby stop relative movement between the respective door link **102** and the respective blocker door **58** and reduce or prevent loading against the respective stop **155**. In addition or alternatively, the cylindrical housing **166** may be fluid charged (e.g., gas charged, liquid charged) such that movement of the internal body **168** within the cylindrical housing **166** is damped.

In some embodiments, referring to FIG. **16**, each door actuation linkage **86** may be pivotally coupled to the fixed structure **60** through a respective door actuation linkage mount **176**. This linkage mount **176** may be configured as a lost motion device for the door actuation linkage **86** to facilitate, for example, over-stowing the translating sleeve **62**. Briefly, the translating sleeve **62** may be temporarily over-stowed (e.g., translated towards the fixed structure **60** beyond its stowed position) to facilitate locking the translating sleeve **62** to the fixed structure **60**, or another stationary structure of the nacelle outer structure **24**, with one or more sleeve locks. Following this locking, the translating sleeve **62** may translate back to its stowed position and be held in place by the sleeve lock(s). The linkage mount **176** of FIG. **16** includes a mount link **178**, a mount spring **180** (or another type of biasing device) and a mount stop **182**.

Referring to FIGS. **17** and **18**, the mount link **178** may be configured as a multi-arm crank. The mount link **178** of FIGS. **17** and **18**, for example, includes a mount base **184**, a stop arm **186** (e.g., a straight lever arm) and one or more linkage arms **188**A and **188**B (generally referred to as "**188**").

The mount base **184** may be an elongated body such as a mounting shaft. This mounting shaft may be a solid rod or a hollow tube. The mount base **184** of FIGS. **17** and **18** extends laterally between opposing lateral ends **190**A and **190**B of the mount base **184**. Here, the mount base ends **190** are also opposing lateral ends of the mount link **178**.

The stop arm **186** is connected to (e.g., formed integral with or otherwise fixedly attached to) the mount base **184**. The stop arm **186** of FIGS. **17** and **18** is located at an intermediate position (e.g., centered) laterally between the mount base ends **190**. The stop arm **186** may be configured as a straight lever arm for the mount link **178**. The stop arm **186** of FIG. **19**, for example, projects out from the mount

base **184** along a straight line stop arm trajectory **192** to a distal end **194** of the stop arm **186**. It is contemplated, however, the stop arm trajectory **192** may alternatively be slightly curved and/or otherwise non-straight between the mount base **184** and the stop arm distal end **194** depending upon, for example, space constraints for the linkage mount **176**, etc.

Referring to FIGS. **17** and **18**, each of the linkage arms **188** is connected to (e.g., formed integral with or otherwise fixedly attached to) the mount base **184**. The linkage arms **188**A and **188**B of FIGS. **17** and **18** are located to opposing lateral sides of the stop arm **186**. The first linkage arm **188**A, for example, may be disposed at (or near) the first mounting base end **190**A. The second linkage arm **188**B may be disposed at (or near) the second mounting base end **190**B. Each of the linkage arms **188** may be configured as a bent or otherwise non-straight lever arm for the mount link **178**. For example, referring to FIG. **19**, each of the linkage arms **188** includes an offset section **196** and a lever section **198**. The offset section **196** of FIG. **19** projects out from the mount base **184** along an (e.g., straight line or slightly curved) offset section trajectory **200** to the lever section **198**, where the offset section **196** meets the lever section **198** of that same linkage arm **188** at an elbow **202** between the offset section **196** and the lever section **198**. The lever section **198** projects out from the offset section **196** along a (e.g., straight line or slightly curved) lever section trajectory **204** to a distal end **206** of the respective linkage arm **188** and its lever section **198**. This lever section trajectory **204** may be parallel with or slightly angularly offset from (e.g., by up to five or ten degrees (5-10°)) the stop arm trajectory **192**. Each of the trajectories **192**, **204** is angularly offset from the offset section trajectory **200** by a respective offset angle **208**, **210**, where the offset angle **208** may or may not be complimentary to the offset angle **210**. The offset angle **208**, for example, may be between sixty degrees (60°) and ninety degrees (90°). The offset angle **210** may be between ninety degrees (90°) and one-hundred and twenty degrees (120°). The present disclosure, however, is not limited to such exemplary offset angles and may vary depending upon the specific thrust reverser arrangement.

Each mount link element **186**, **198** may project in a similar direction (e.g., generally axially forward) to its respective distal end **194**, **206**. With this arrangement, the mount link **178** of FIG. **19** is configured with a channeled profile; e.g., a U-shaped profile, a C-shaped profile, etc.

Referring to FIG. **16**, the mount link **178** is pivotally coupled to the fixed structure **60**. The mount base **184** of FIG. **20**, for example, is pivotally attached to an interior (e.g., radial outer side) of the bullnose **66** at a mount link pivot joint **212**; e.g., via a clevis connection between mounting flanges **214**A and **214**B fixed to the bullnose **66**. Note, in FIG. **20**, the bullnose **66** is shown with an open access window **216**. After installation of the mount link **178**, however, each access window **216** may be closed off with a respective cover **218** (e.g., a panel of the bullnose **66**) as shown, for example, in FIG. **21**. In this assembled arrangement of FIG. **21**, each mount link **178** extends (e.g., radially) across a wall **220** of the bullnose **66** that includes the covers **218**. More particularly, each linkage arm **188** projects out from the mount base **184** (sec FIG. **20**) through a respective port **222** in the bullnose wall **220** and its respective cover **218** to its respective distal end **206** (see FIG. **19**). Here, each offset section **196** of FIG. **16** projects through the respective port **222** with (a) the lever section **198** and (b) the other mount link elements **180**, **182**, **184**, **186** (see also FIG. **20**) arranged to opposing sides of the bullnose wall **220**.

Referring to FIGS. **17** and **18**, the mount link **178** is pivotally coupled to the respective structure link **100**. Each linkage arm **188** of FIGS. **17** and **18**, for example, is pivotally attached to a respective one of the structure link arms **112**A, **112**B through a respective one of the structure link arm pivot joint **118**A, **118**B. Referring to FIG. **16**, each structure link arm pivot joint **118** is disposed outside of (e.g., radially inboard of) the fixed structure **60** and its bullnose **66**. The present disclosure, however, is not limited to such an exemplary arrangement with the bullnose **66**. For example, in other embodiments, it is contemplated the entire mount link **178** may be disposed radially outboard of the bullnose wall **220**.

Referring to FIG. **18**, the mount spring **180** may be configured as a leaf spring element. The mount spring **180** of FIG. **18**, for example, includes a spring base **224** and one or more cantilevered spring elements **226**A and **226**B (generally referred to as "**226**"). The spring base **224** extends laterally between and is connected to the spring elements **226**A and **226**B. Each of the spring elements **226** projects laterally and transversely (e.g., generally axially along the axis of FIG. **16**) out from the spring base **224** to a respective (e.g., unsupported) distal end of the respective spring element **226**. Each spring element **226** is configured to engage (e.g., abut against, press against, etc.) a respective one of the linkage arms **188** and its offset section **196**. Referring to FIG. **16**, the spring base **224** is fixedly attached to a support wall **228** of the nacelle support structure **68**. The mount spring **180** is thereby mounted to the fixed structure **60**. Moreover, the mount spring **180** of FIG. **16** is arranged and may be (e.g., slightly) compressed between (a) the fixed structure **60** and its support wall **228** and (b) the mount link **178** and its linkage arms **188**. With this arrangement, the mount spring **180** may bias the respective mount link **178** away from the support wall **228** and in a first direction (e.g., counterclockwise in FIG. **16**) about a pivot axis **230** of the respective mount link pivot joint **212**. The mount spring **180** may thereby be operable to resist (e.g., and ultimately limit) pivoting of the respective mount link **178** about its pivot axis **230** in a second direction (e.g., clockwise in FIG. **16**).

Referring to FIG. **18**, the mount stop **182** may be configured as a bumper for the stop arm **186** of the respective mount link **178**. The mount stop **182** of FIG. **18**, for example, is configured as a flange. This flange may be connected to (e.g., formed integral with or otherwise attached to) the respective spring element **226**. The flange of FIG. **18** projects transversely out from the respective spring base **224**. The mount stop **182** is arranged relative to the respective mount link **178** such that the mount stop **182** may engage (e.g., abut against, press against, etc.) the respective stop arm **186**. Here, the mount stop **182** is arranged to limit (e.g., provide a hard stop to) pivoting of the respective mount link **178** about its pivot axis **230** in the first direction.

With the arrangement of FIG. **16**, any pivoting of the mount link **178** about its pivot axis **230** may be bounded by (e.g., limited between) the respective mount spring **180** and the respective mount stop **182**. For example, depending on the spring stiffness of the mount spring **180** (versus a load applied to the mount link **178**), the mount link **178** may be operable to pivot about its pivot axis **230** a certain number of degrees. For example, the mount link **178** may be operable to pivot about the pivot axis **230** equal to or less than thirty degrees; e.g., between ten degrees (10°) and twenty degrees (20°), between twenty degrees (20°) and thirty degrees (30°). The present disclosure, however, is not limited to such an exemplary arrangement. In general, the mount spring **180** may be configured to bias the respective

mount link **178** and its stop arm **186** against the respective mount stop **182**. The mount link **178** and its stop arm **186** may thereby maintain engagement with the respective mount stop **182** when tortional forces are not being applied to the mount link **178**.

When the translating sleeve **62** of FIG. **16** is translated axially forward towards the fixed structure **60** into its over-stowed position, each structure link arm pivot joint **118** may also move axially forward towards the fixed structure **60**. This movement of each structure link arm pivot joint **118** and, thus, the respective door actuation linkage **86** and its structure link **100** is accommodated by the linkage mount **176** by allowing the mount link **178** to (e.g., slightly) pivot about its pivot axis **230** in the second direction. Here, the mount spring **180** resists, but accommodates the pivoting of the mount link **178** about its pivot axis **230**. By contrast, when the thrust reverser **36** is being deployed and the translating sleeve **62** is translating axially aft, each door actuation linkage **86** may tend to pull at each structure link arm pivot joint **118**. However, pivoting of the mount link **178** in the first direction about the pivot axis **230** is limited (e.g., prevented) by the engagement between the respective stop arm **186** and the respective mount stop **182**.

While various embodiments of the present invention have been disclosed, it will be apparent to those of ordinary skill in the art that many more embodiments and implementations are possible within the scope of the invention. For example, the present invention as described herein includes several aspects and embodiments that include particular features. Although these features may be described individually, it is within the scope of the present invention that some or all of these features may be combined with any one of the aspects and remain within the scope of the invention. Accordingly, the present invention is not to be restricted except in light of the attached claims and their equivalents.

What is claimed is:

1. An assembly for an aircraft propulsion system, comprising:

a fixed structure;

a translating structure configured to translate between a stowed position and a deployed position; and

a thrust reverser including a blocker door, a linkage mount and an actuation linkage;

the blocker door pivotally coupled to the translating structure;

the linkage mount including a mount link, a mount spring and a mount stop, the mount link pivotally coupled to the fixed structure about a pivot axis, the mount spring configured to bias the mount link about the pivot axis against the mount stop; and

the actuation linkage operatively coupling the blocker door to the mount link;

wherein the actuation linkage includes a structure link and a door link, the structure link is between and pivotally coupled to the mount link and the door link, and the door link is between and pivotally coupled to the structure link and the blocker door.

2. The assembly of claim **1**, wherein the linkage mount is configured to

press the mount link against the stop as the translating structure translates to the deployed position; and

press the mount link against the mount spring as the translating structure translates to the stowed position.

3. The assembly of claim **1**, wherein the mount spring comprises a leaf spring element.

4. The assembly of claim **1**, wherein

the fixed structure comprises a wall; and

the mount spring and the mount stop are fixed to the wall.

5. The assembly of claim **1**, wherein the mount stop is formed integral with the mount spring.

6. The assembly of claim **1**, wherein the mount link comprises a crank.

7. The assembly of claim **1**, wherein

the mount link includes a stop arm, a linkage arm and a base between and connected to the stop arm and the linkage arm;

the stop arm is configured to abut against the mount stop; and

the linkage arm is pivotally coupled to the actuation linkage.

8. The assembly of claim **7**, wherein

the linkage arm includes a lever section and an offset section that connects the lever section to the base;

the lever section is pivotally coupled to the actuation linkage and meets the offset section at an elbow; and

the mount spring engages the offset section.

9. The assembly of claim **7**, wherein the mount link is pivotally coupled to the fixed structure at the base.

10. The assembly of claim **7**, wherein

the thrust reverser is configured to open a thrust reverser passage when the translating structure is in the deployed position;

the fixed structure comprises a bullnose configured to provide a smooth aerodynamic transition into the thrust reverser passage; and

the linkage arm projects through a port in a wall of the bullnose.

11. The assembly of claim **1**, wherein

the mount link includes a base, a lever section and an offset section;

the base is pivotally coupled to the fixed structure;

the lever section is pivotally coupled to the actuation linkage and meets the offset section at an elbow; and

the offset section projects from the base to the lever section.

12. The assembly of claim **11**, wherein the mount spring is configured to abut and press against the offset section.

13. The assembly of claim **1**, wherein

the thrust reverser is configured to open a thrust reverser passage when the translating structure is in the deployed position;

the fixed structure comprises a bullnose configured to provide a smooth aerodynamic transition into the thrust reverser passage; and

the mount link projects through a port in a wall of the bullnose.

14. The assembly of claim **1**, wherein

the translating structure forms a peripheral boundary of a flowpath;

the structure link and the door link are outside of the flowpath when the translating structure is in the stowed position; and

the structure link and the door link are disposed in the flowpath when the translating structure is in the deployed position.

15. The assembly of claim **1**, further comprising a fixed cascade structure projecting into an internal cavity of the translating structure when the translating structure is in the stowed position.

16. An assembly for an aircraft propulsion system, comprising:

a fixed structure:

a translating structure configured to translate between a stowed position and a deployed position; and

a thrust reverser including a blocker door, a linkage mount and an actuation linkage;

the blocker door pivotally coupled to the translating structure;

the linkage mount including a mount link, a mount spring and a mount stop, the mount link pivotally coupled to the fixed structure about a pivot axis, the mount spring configured to bias the mount link about the pivot axis against the mount stop; and

the actuation linkage operatively coupling the blocker door to the mount link;

wherein the thrust reverser is configured to open a thrust reverser passage when the translating structure is in the deployed position;

wherein the fixed structure comprises a bullnose configured to provide a smooth aerodynamic transition into the thrust reverser passage; and

wherein the bullnose covers the mount spring and the mount stop.

17. An assembly for an aircraft propulsion system, comprising:

a fixed structure;

a translating structure configured to translate between a stowed position and a deployed position; and

a thrust reverser including a blocker door, a linkage mount and an actuation linkage;

the blocker door pivotally coupled to the translating structure;

the linkage mount including a mount link, a mount spring and a mount stop, the mount link pivotally coupled to the fixed structure about a pivot axis, the mount spring configured to bias the mount link about the pivot axis against the mount stop; and

the actuation linkage operatively coupling the blocker door to the mount link;

wherein the actuation linkage comprises a Y-shaped link pivotally attached to the mount link through a pair of laterally spaced pivot joints between the Y-shaped link and the mount link.

* * * * *