US012384553B2

(12) **United States Patent**
Osama et al.

(10) **Patent No.: US 12,384,553 B2**
(45) **Date of Patent: Aug. 12, 2025**

(54) **BEARING CURRENT MITIGATION FOR AN ELECTRIC MACHINE EMBEDDED IN A GAS TURBINE ENGINE**

(71) Applicants: **General Electric Company**, Schenectady, NY (US); **General Electric Deutschland Holding GmbH**, Frankfurt (DE); **General Electric Company Polska Sp. z o.o.**, Warsaw (PL)

(72) Inventors: **Mohamed Osama**, Garching (DE); **Bartlomiej Drozd**, Otrebusy (PL); **John Russell Yagielski**, Scotia, NY (US)

(73) Assignees: **General Electric Company**, Evendale, OH (US); **General Electric Deutschland Holding GmbH**, Frankfurt (DE); **General Electric Company Polska Sp. z o.o**, Warsaw (PL)

(*) Notice: Subject to any disclaimer, the term of this patent is extended or adjusted under 35 U.S.C. 154(b) by 233 days.

(21) Appl. No.: **18/338,390**

(22) Filed: **Jun. 21, 2023**

(65) **Prior Publication Data**

US 2023/0344322 A1 Oct. 26, 2023

Related U.S. Application Data

(63) Continuation of application No. 17/205,028, filed on Mar. 18, 2021, now Pat. No. 11,735,982.

(51) **Int. Cl.**
H02K 11/40 (2016.01)
F02C 6/20 (2006.01)
(Continued)

(52) **U.S. Cl.**
CPC ***H02K 11/40*** (2016.01); ***F02C 6/206*** (2013.01); ***H02K 7/1823*** (2013.01); ***H02K 11/02*** (2013.01);
(Continued)

(58) **Field of Classification Search**
CPC H02K 11/40; H02K 7/1823; H02K 11/02; H02K 11/21; H02K 24/00; H03H 1/0007;
(Continued)

(56) **References Cited**

U.S. PATENT DOCUMENTS

4,939,506 A 7/1990 Gram
5,914,547 A 6/1999 Barahia et al.
(Continued)

OTHER PUBLICATIONS

Aegis, Aegis Pro Series High Current Bearing Protection Ring, Medium Voltage Motors, Generators and Turbines, Electro Static Technology, 4 Pages. Retrieved from weblink https://www.est.aegis.com/PROseries/ on Jan. 29, 2021.

Primary Examiner — Charles Reid, Jr.
(74) *Attorney, Agent, or Firm* — Dority & Manning, P.A.

(57) **ABSTRACT**

A propulsor is provided including a gas turbine engine having a shaft and one or more bearings supporting the shaft, a rotor hub operatively coupled to the shaft and comprising a hub flange, an electric machine comprising a stator assembly and a rotor assembly, a rotor connection member operatively coupled to the rotor assembly of the electric machine and comprising a connection flange, and an insulated joint for operatively coupling the rotor assembly with the shaft. The insulated joint includes a plurality of insulative layers, at least one of the plurality of insulative layers extending between the hub flange and the connection flange to interrupt common mode electric current from flowing between the rotor assembly and the shaft.

20 Claims, 13 Drawing Sheets

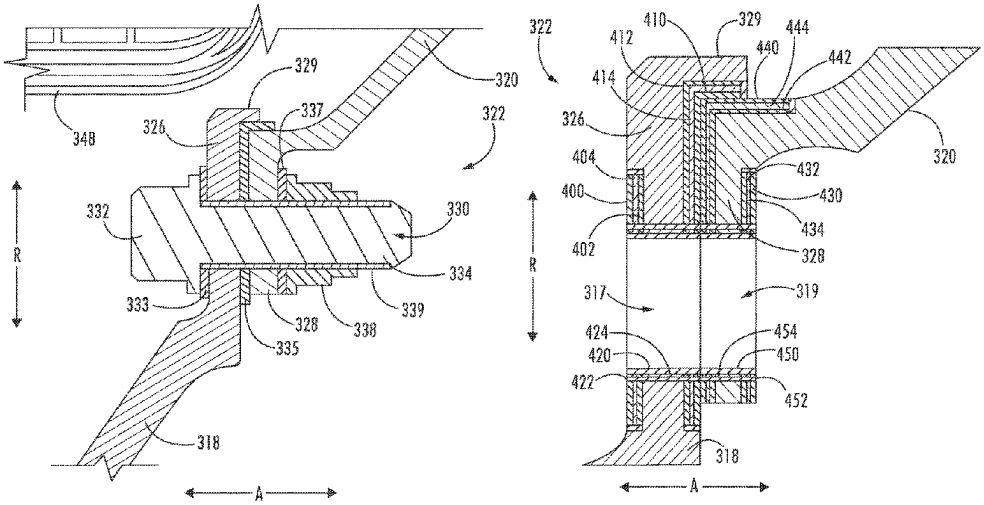

(51) **Int. Cl.**

H02K 7/18	(2006.01)
H02K 11/02	(2016.01)
H02K 11/21	(2016.01)
H02K 24/00	(2006.01)
H03H 1/00	(2006.01)

(52) **U.S. Cl.**
CPC ***H02K 11/21*** (2016.01); ***H02K 24/00*** (2013.01); ***H03H 1/0007*** (2013.01); *F05D 2220/323* (2013.01); *F05D 2220/76* (2013.01)

(58) **Field of Classification Search**
CPC F05D 2220/323; F05D 2220/76; F05D 2260/31
USPC 290/52
See application file for complete search history.

(56) **References Cited**

U.S. PATENT DOCUMENTS

6,447,252	B1 *	9/2002	Barker	F16D 1/06 416/210 A
8,189,317	B2	5/2012	Oh et al.	
8,229,682	B2	7/2012	El-Refaie et al.	
9,097,134	B2	8/2015	Ferch et al.	
11,236,678	B2	2/2022	Davies	
2009/0162139	A1	6/2009	Miller et al.	
2012/0171018	A1	7/2012	Hasel et al.	
2016/0004810	A1	1/2016	Solodovnik et al.	
2018/0083515	A1	3/2018	Graves et al.	
2019/0044405	A1	2/2019	Calebrese et al.	
2019/0081538	A1	3/2019	Nye et al.	
2019/0186745	A1	6/2019	Lowery et al.	
2020/0044518	A1	2/2020	Miller et al.	
2020/0277994	A1	9/2020	Brillon	
2020/0355122	A1	11/2020	Foutch et al.	
2020/0385139	A1	12/2020	Verna et al.	

* cited by examiner

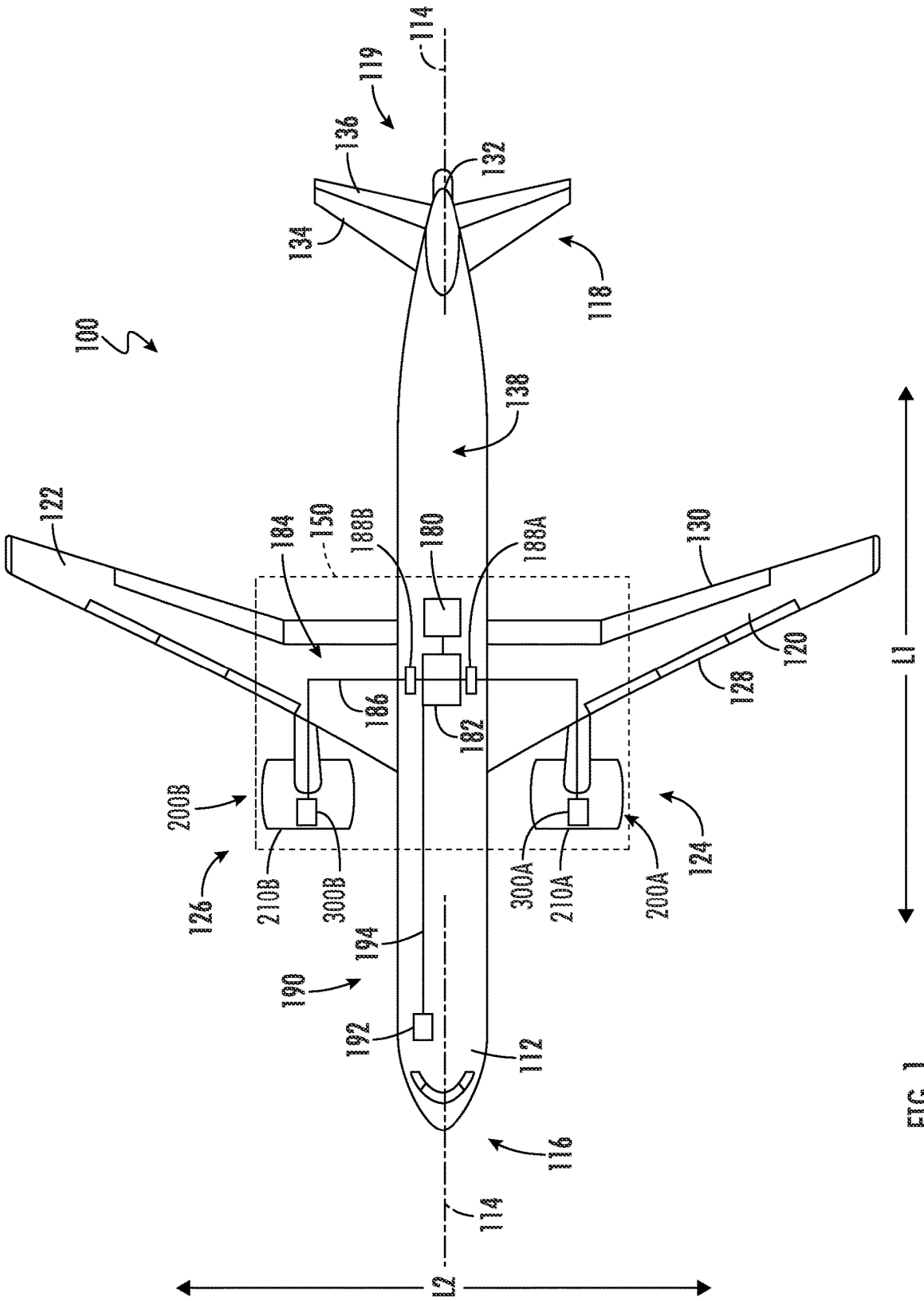
100
114
119
136
134
132
118
138
122
184
150
188B
180
188A
130
120
128
L1
186
182
200B
126
210B
300B
194
190
192
112
116
300A
210A
200A
124
L2

FIG. 1

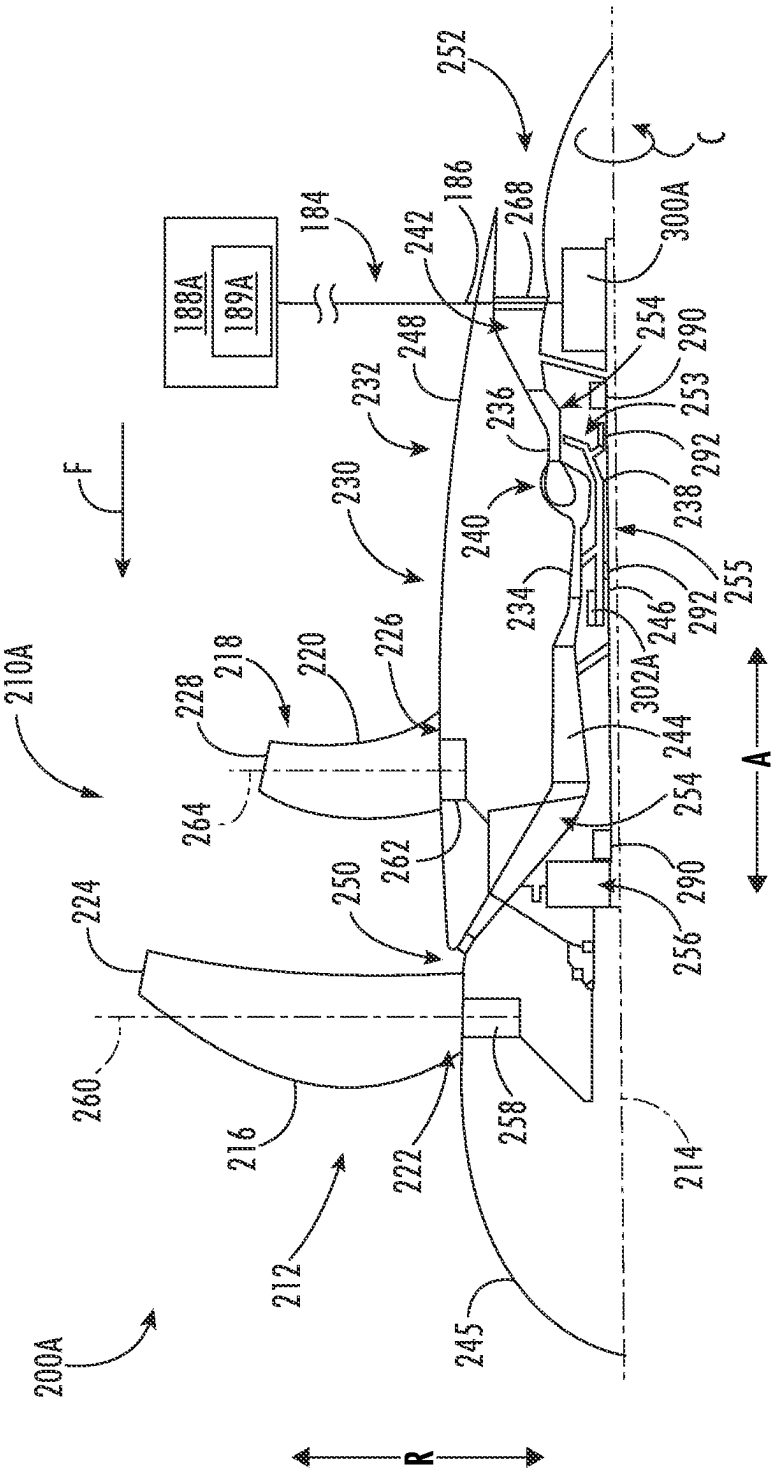
200A
210A
212
214
216
218
220
222
224
226
228
230
232
234
236
238
240
242
244
245
246
248
250
252
253
254
255
256
258
260
262
264
268
290
292
300A
302A
184
186
188A
189A
F
A
R
C

FIG. 2

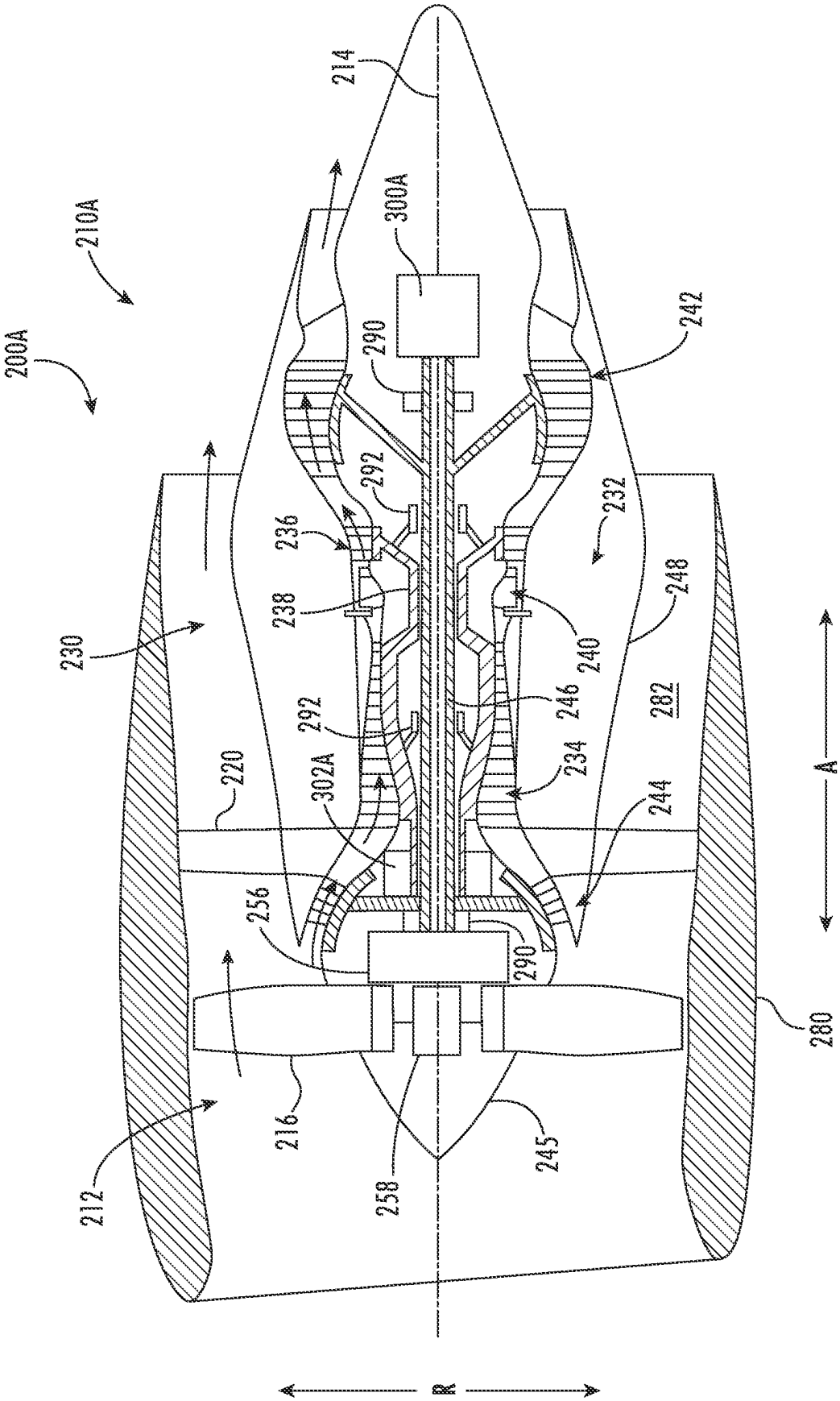
200A
210A
214
300A
290
242
292
236
232
238
248
240
230
246
282
292
234
220
302A
244
256
290
280
216
212
258
245
A
R

FIG. 3

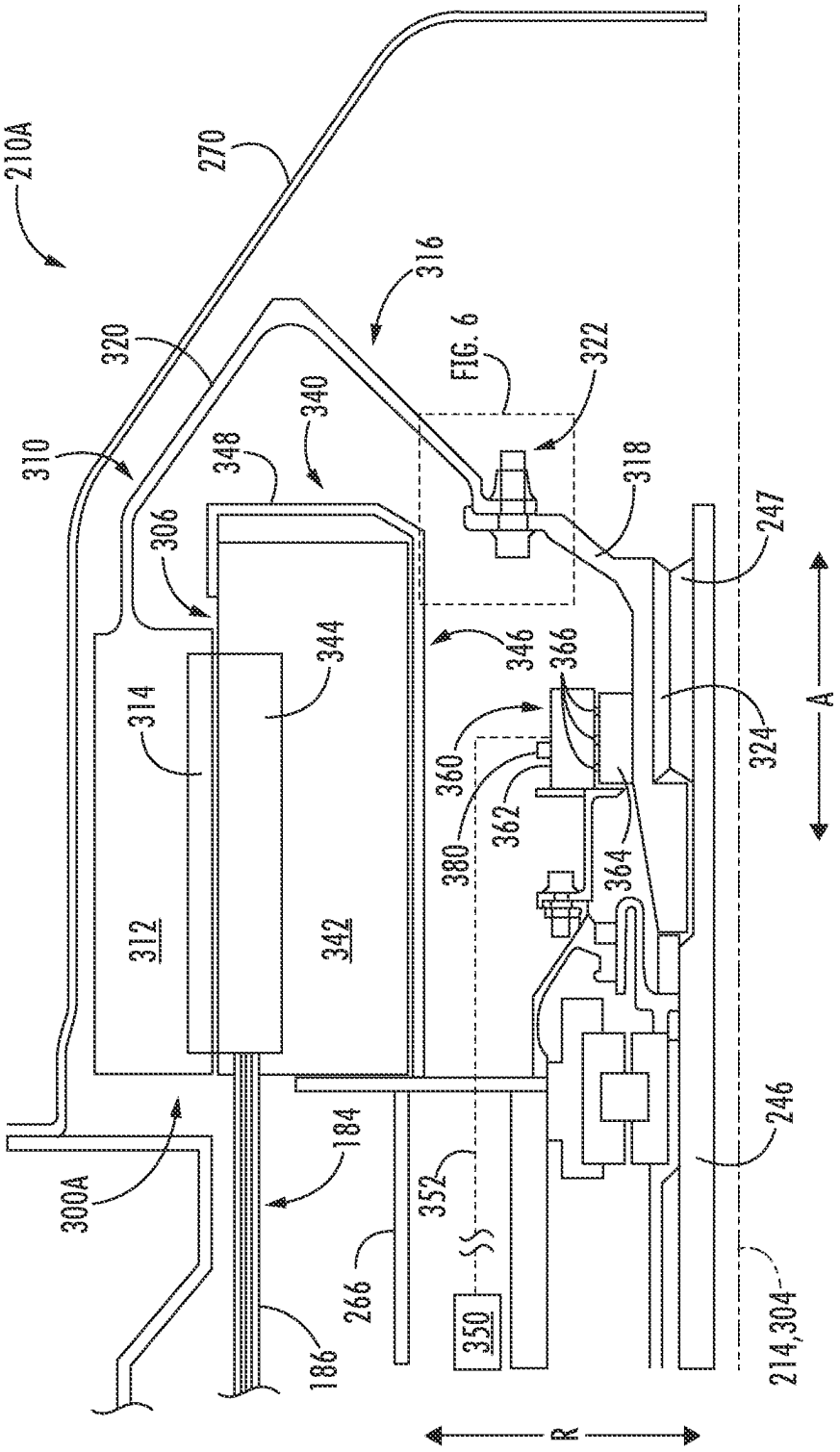
210A
270
316
320
FIG. 6
322
310
348
340
318
247
306
344
346
366
314
360
324
A
362
380
364
312
342
246
184
300A
352
266
350
214,304
186
R

FIG. 4

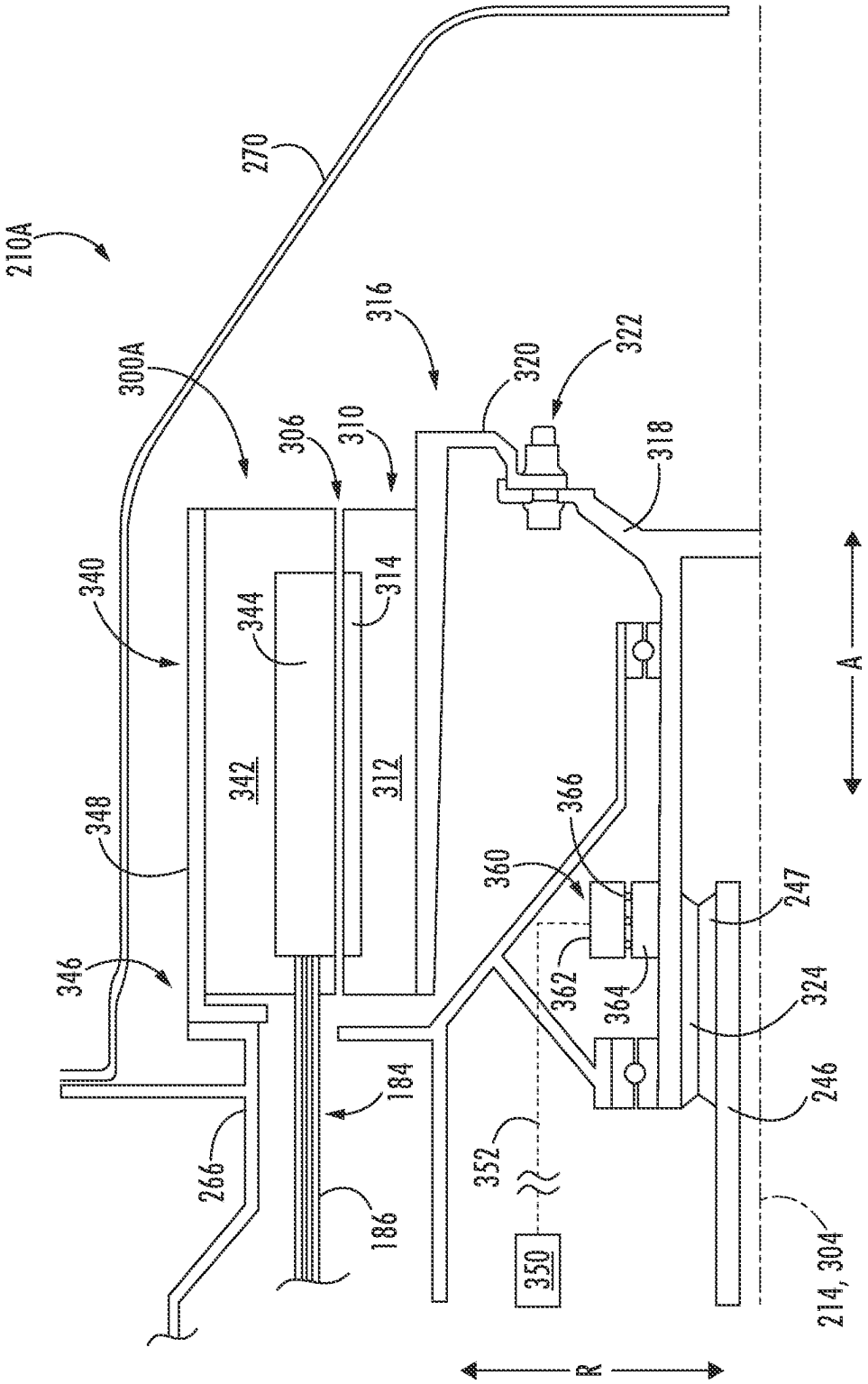
210A
270
300A
316
306
310
320
322
318
340
344
314
342
312
348
366
360
346
362
364
247
324
246
184
266
186
352
350
214, 304
A
R

FIG. 5

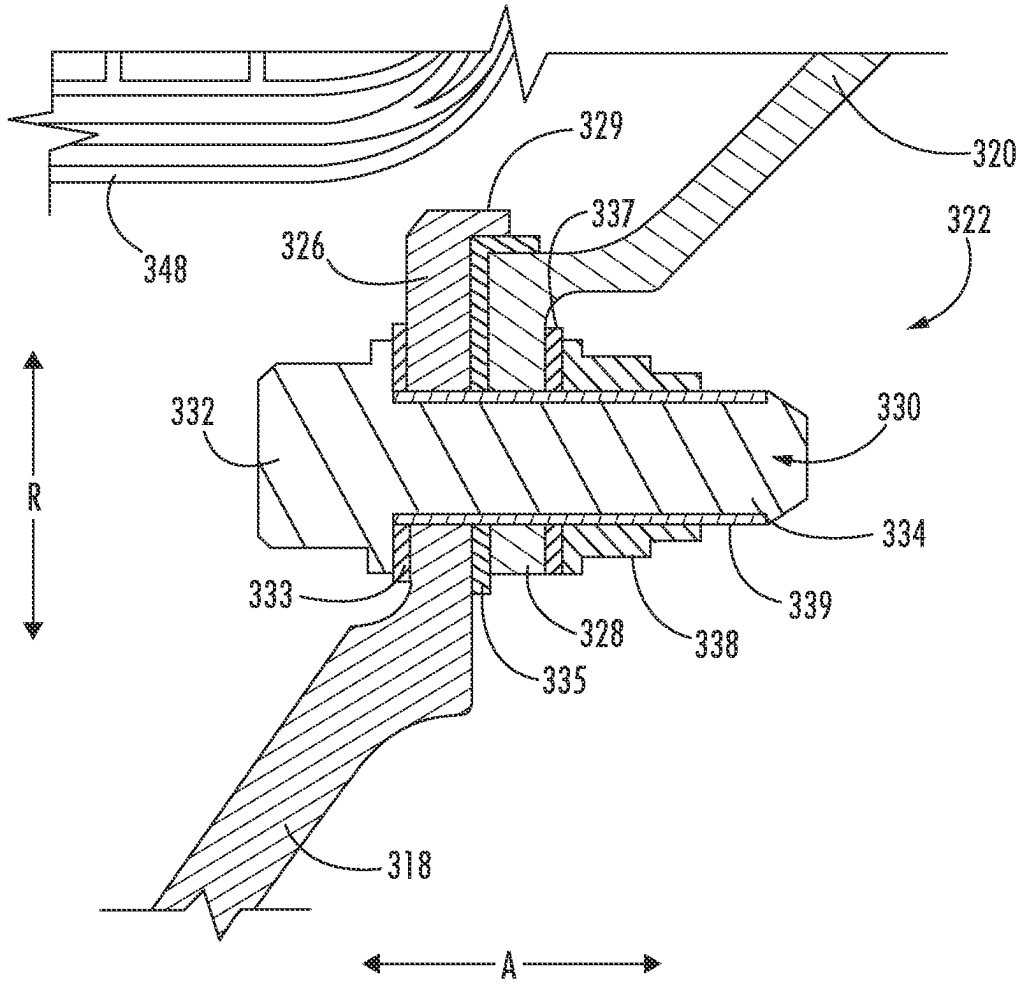

FIG. 6

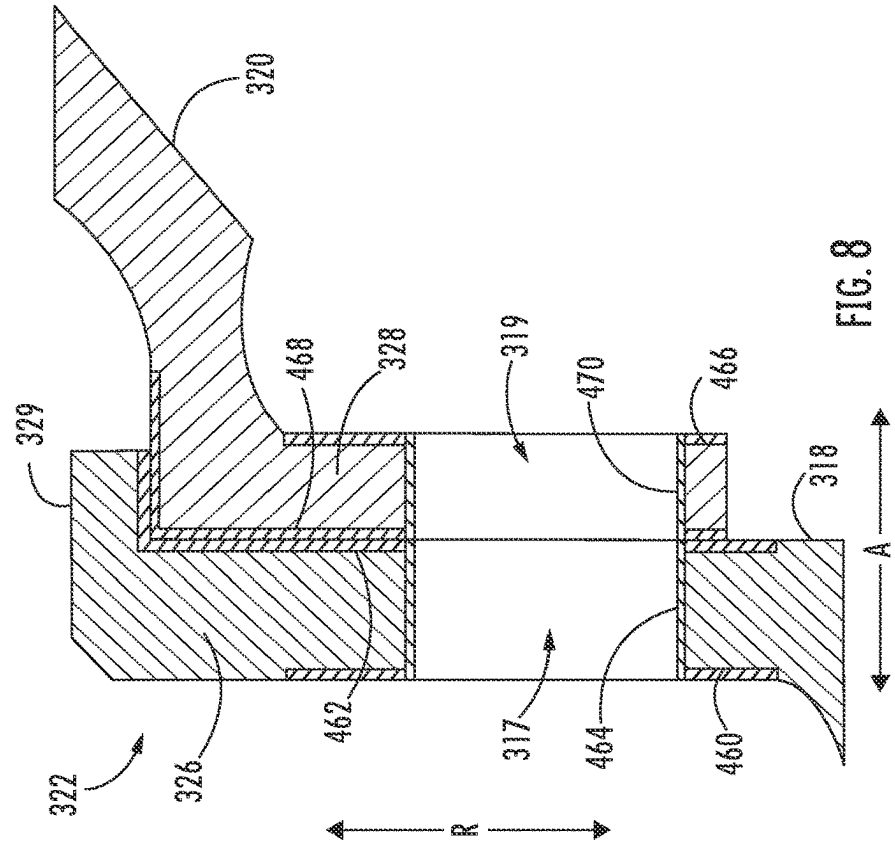
320
329
468
328
319
470
466
318
A
322
326
462
317
464
460
R

FIG. 8

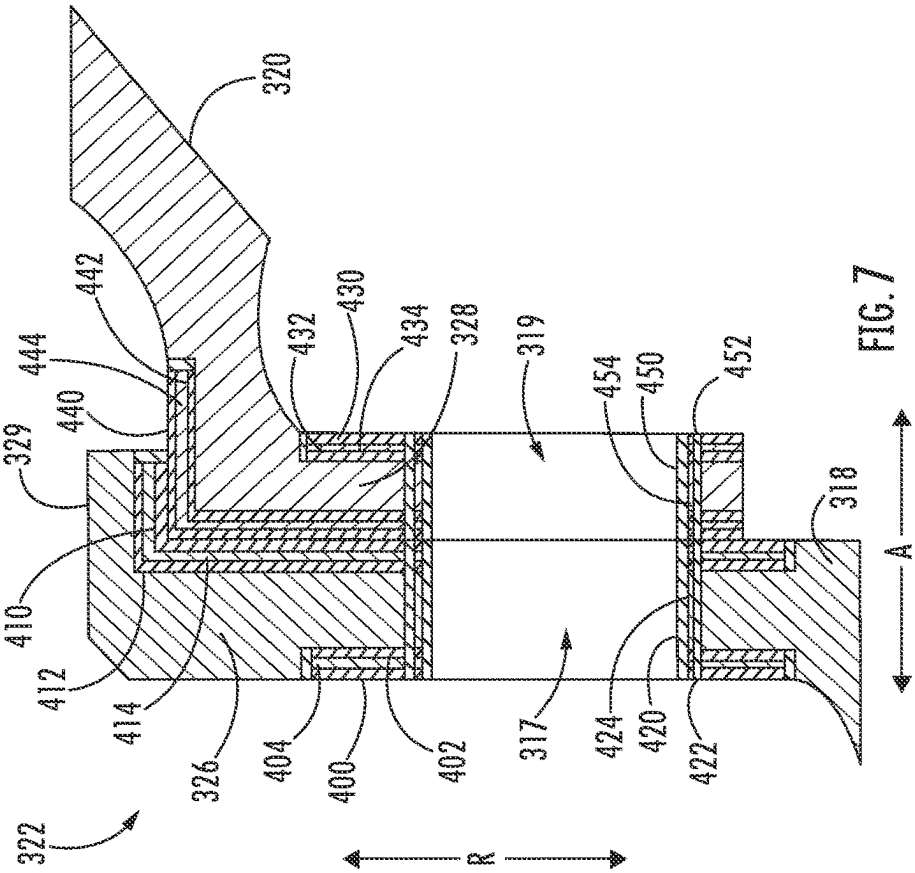
320
442
444
440
329
432
430
434
328
319
454
450
452
318
A
410
412
414
326
404
400
402
317
424
420
422
322
R

FIG. 7

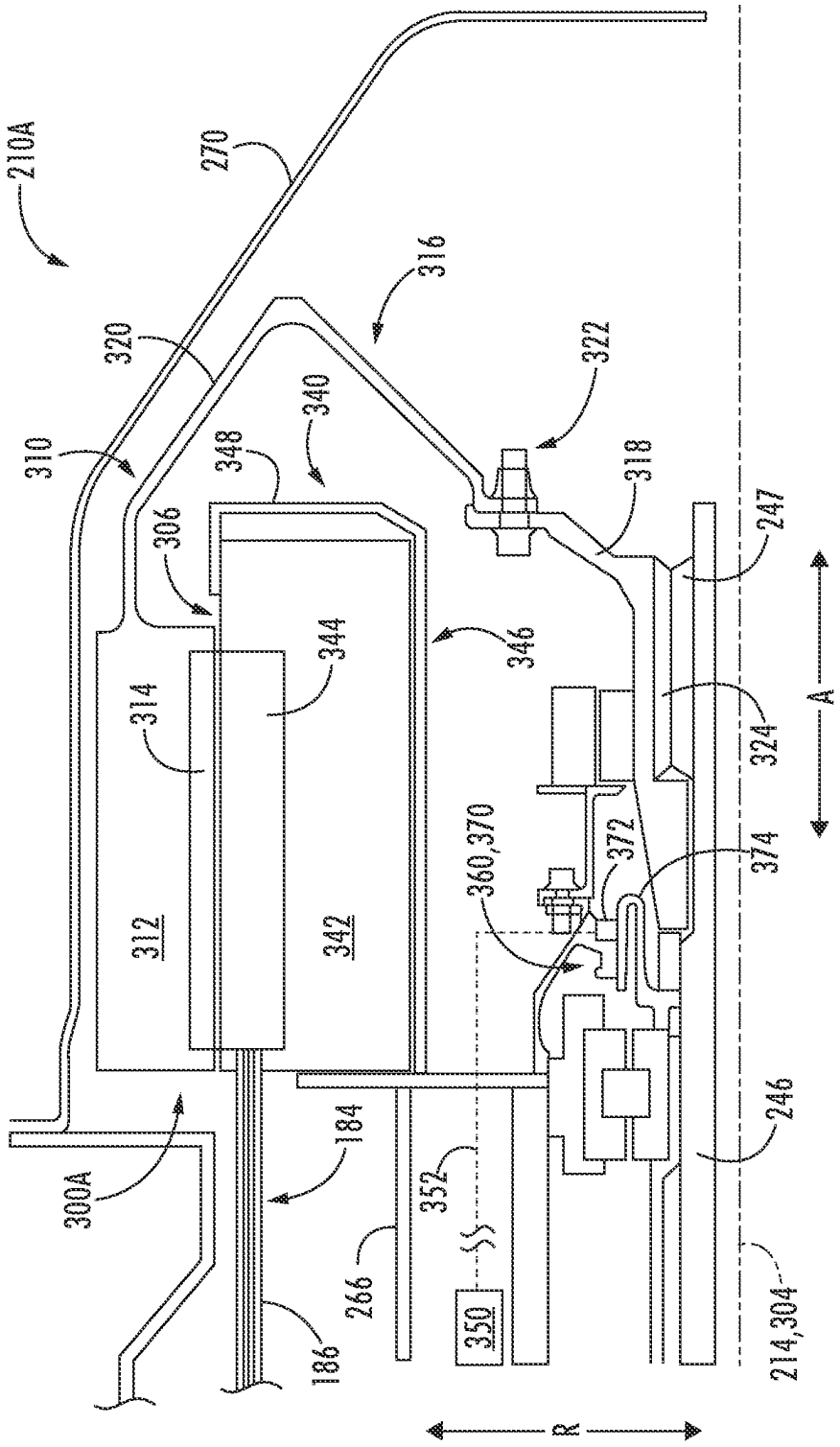
210A
270
316
320
322
310
340
348
318
306
247
344
346
314
324
A
360,370
372
374
312
342
246
184
300A
352
266
350
214,304
186
R

FIG. 9

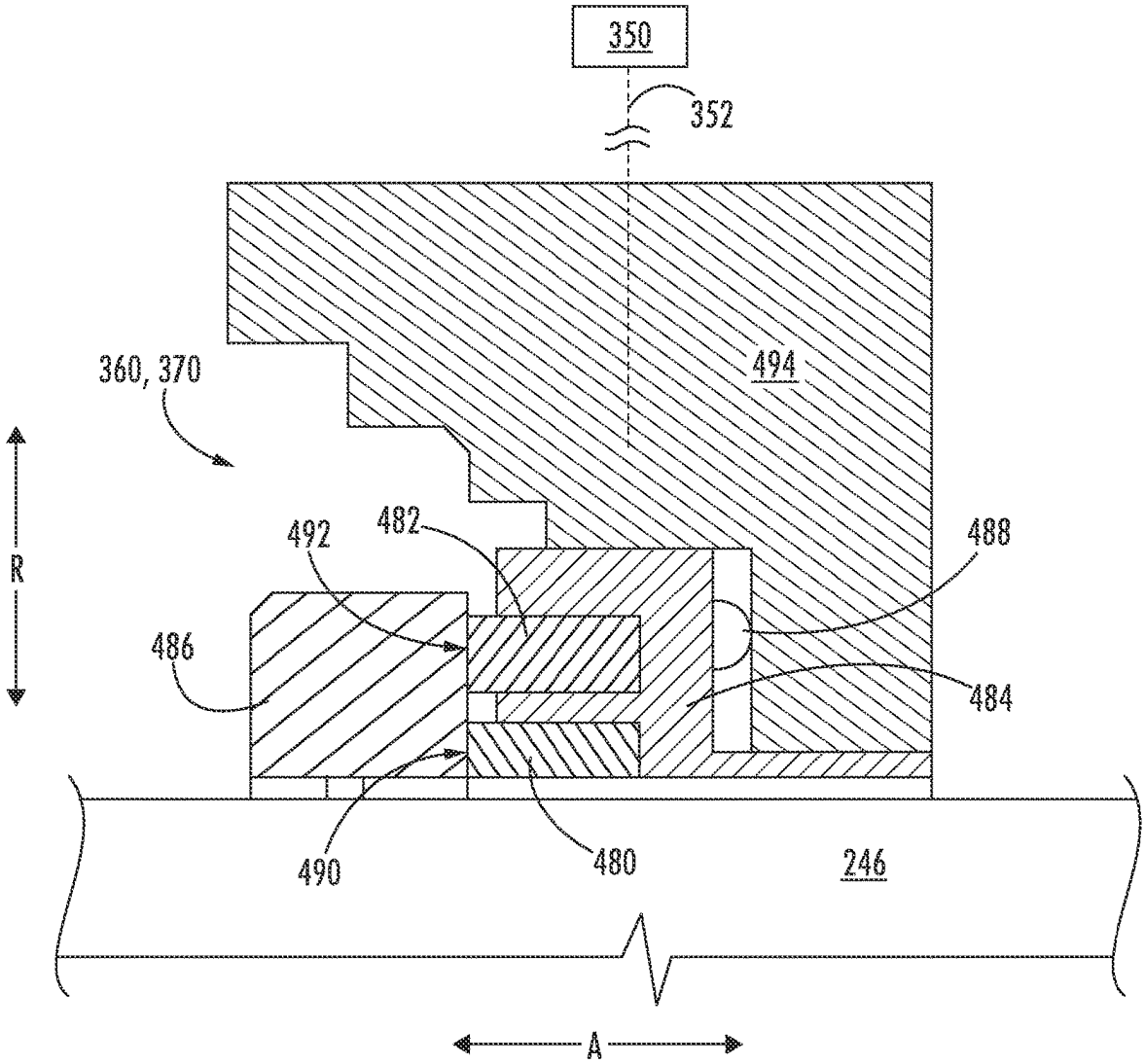

FIG. 10

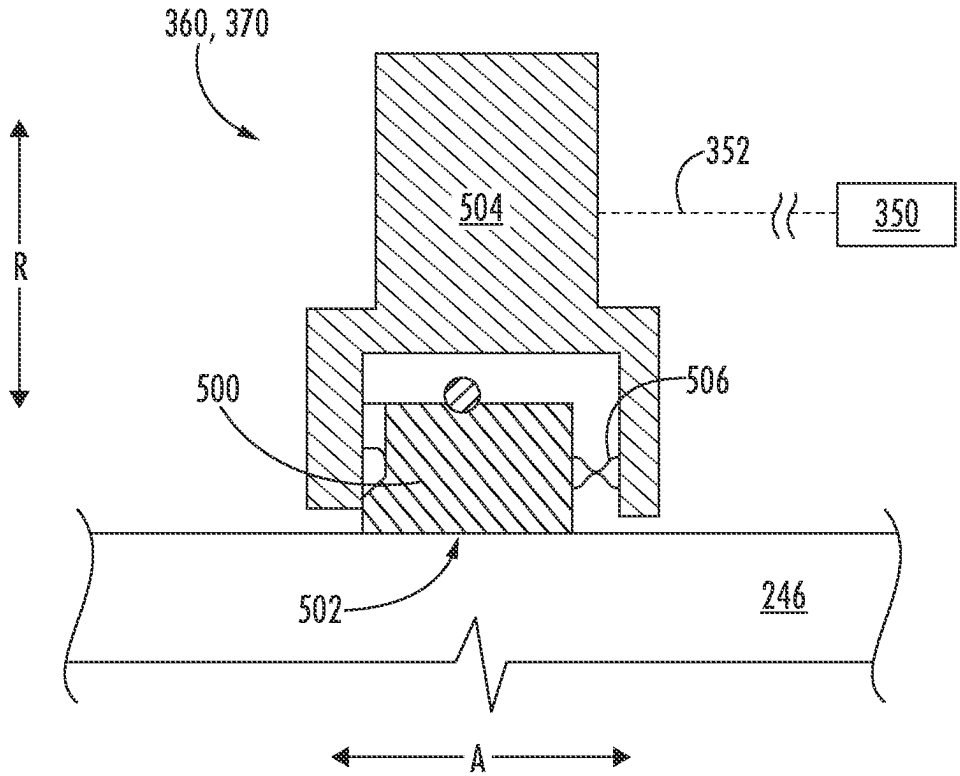

FIG. 11

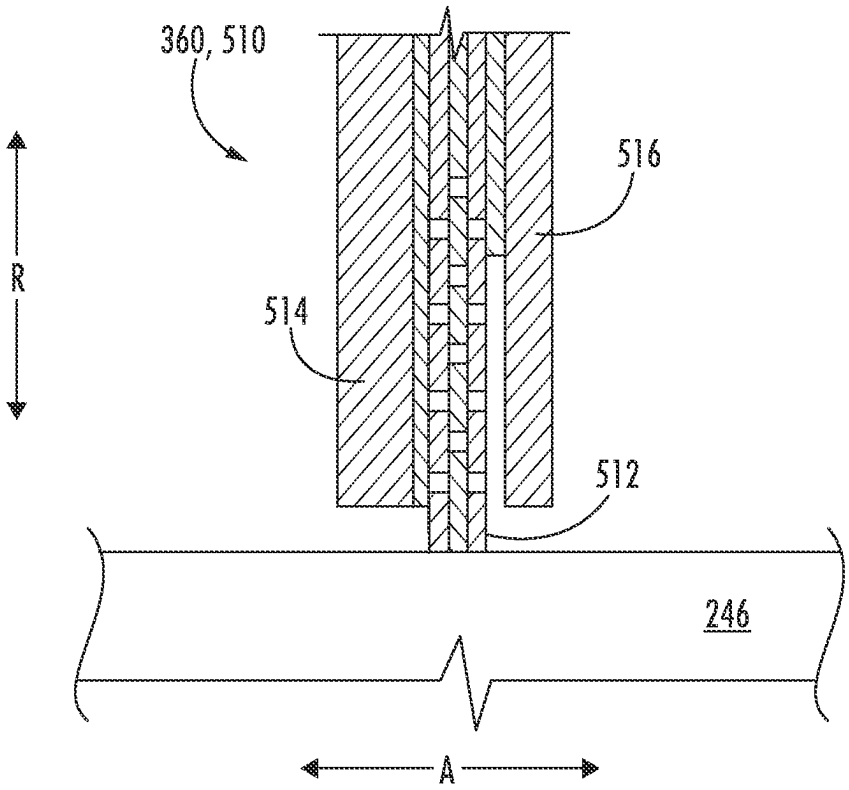

FIG. 12

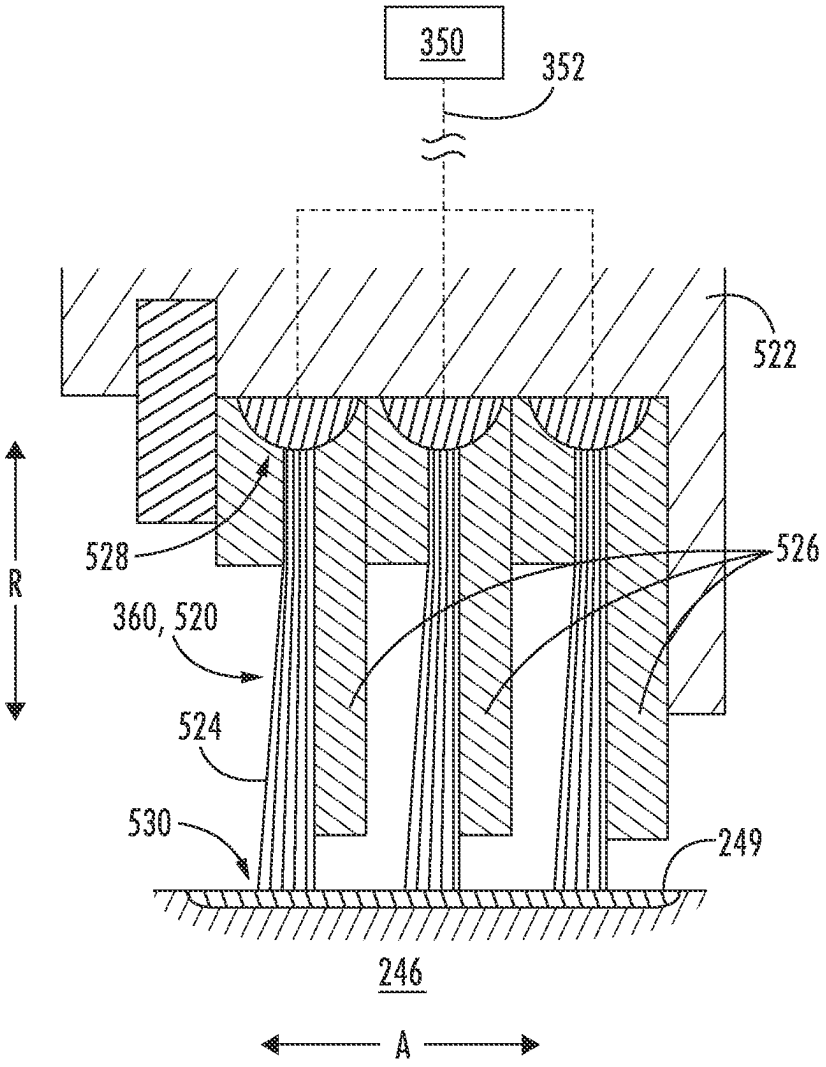

FIG. 13

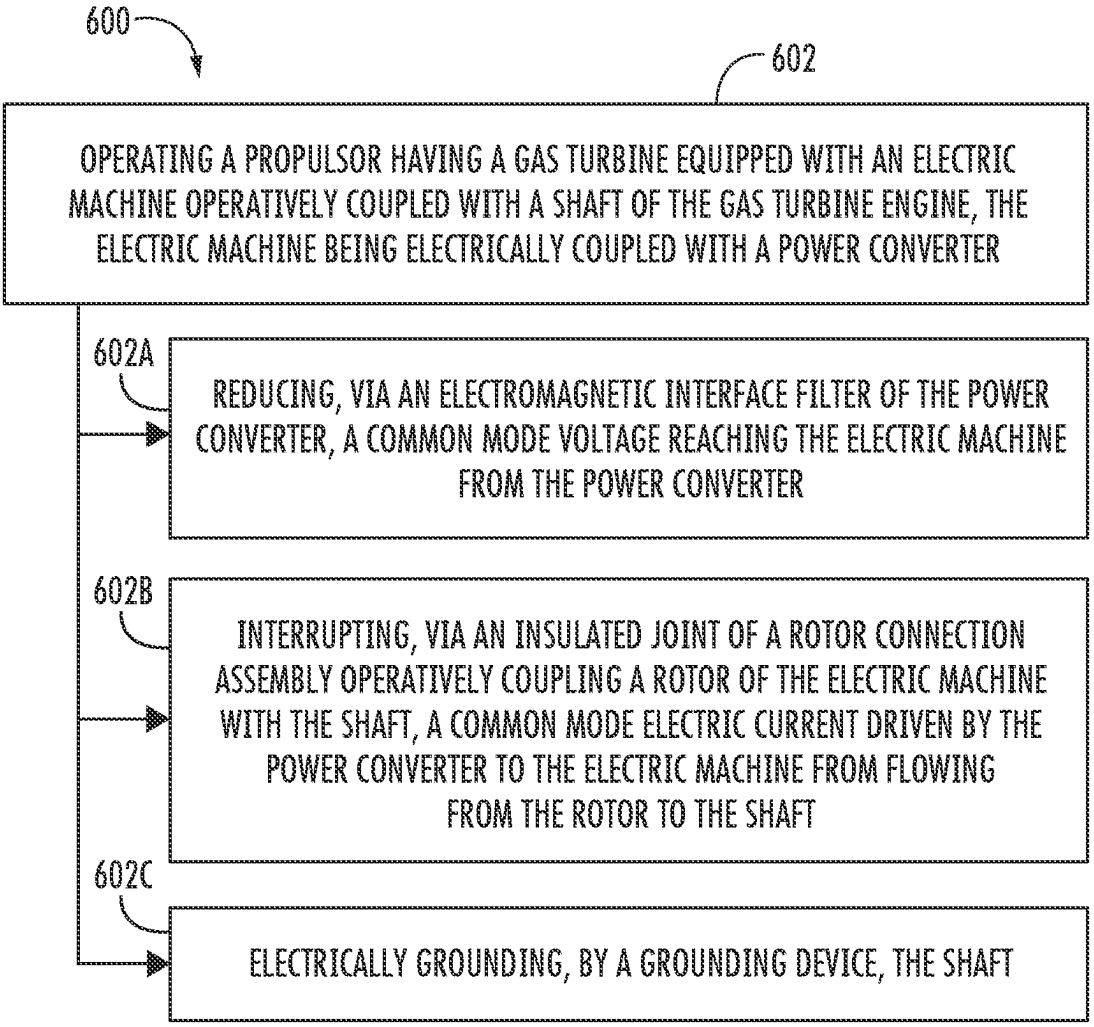
600
602
OPERATING A PROPULSOR HAVING A GAS TURBINE EQUIPPED WITH AN ELECTRIC MACHINE OPERATIVELY COUPLED WITH A SHAFT OF THE GAS TURBINE ENGINE, THE ELECTRIC MACHINE BEING ELECTRICALLY COUPLED WITH A POWER CONVERTER
602A
REDUCING, VIA AN ELECTROMAGNETIC INTERFACE FILTER OF THE POWER CONVERTER, A COMMON MODE VOLTAGE REACHING THE ELECTRIC MACHINE FROM THE POWER CONVERTER
602B
INTERRUPTING, VIA AN INSULATED JOINT OF A ROTOR CONNECTION ASSEMBLY OPERATIVELY COUPLING A ROTOR OF THE ELECTRIC MACHINE WITH THE SHAFT, A COMMON MODE ELECTRIC CURRENT DRIVEN BY THE POWER CONVERTER TO THE ELECTRIC MACHINE FROM FLOWING FROM THE ROTOR TO THE SHAFT
602C
ELECTRICALLY GROUNDING, BY A GROUNDING DEVICE, THE SHAFT

FIG. 14

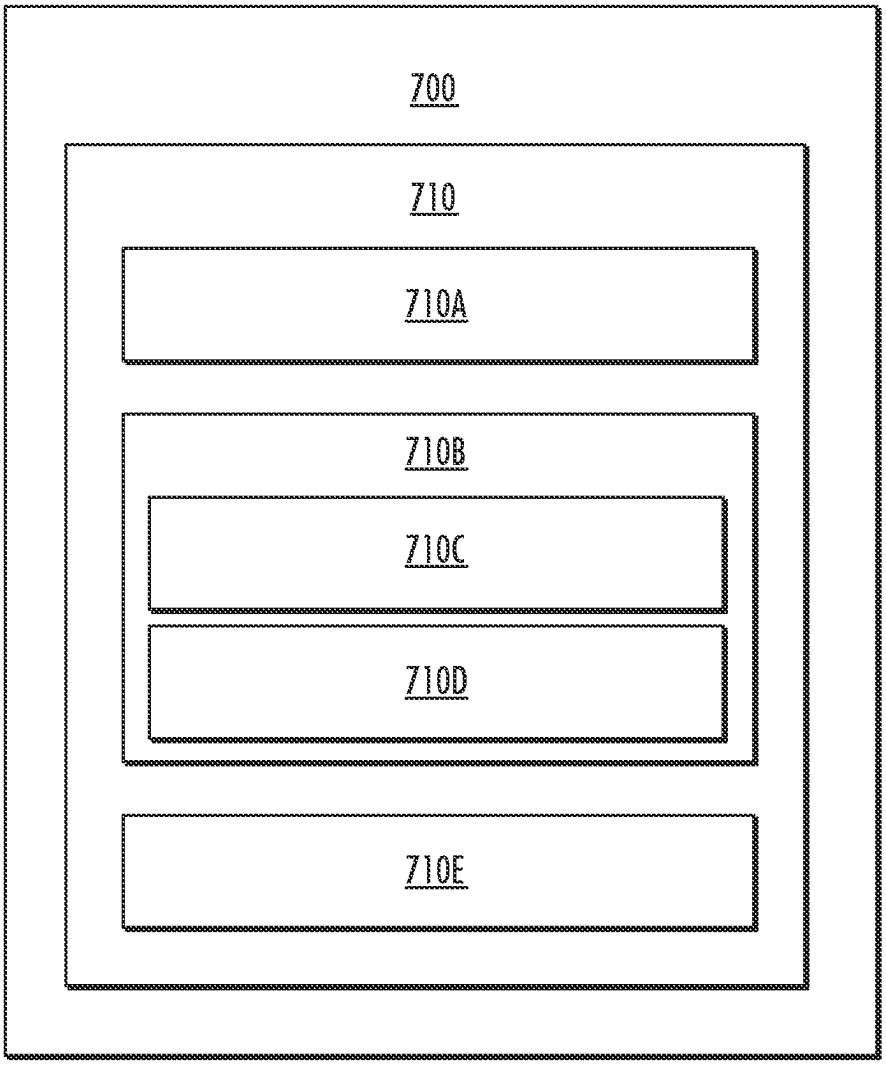

FIG. 15

BEARING CURRENT MITIGATION FOR AN ELECTRIC MACHINE EMBEDDED IN A GAS TURBINE ENGINE

CROSS-REFERENCE TO RELATED APPLICATIONS

This application is a continuation of U.S. application Ser. No. 17/205,028, filed Mar. 18, 2021, titled "Bearing Current Mitigation for an Electric Machine Embedded in a Gas Turbine Engine," which is incorporated herein by reference in its entirety for all purposes.

FIELD

The present subject matter relates generally to gas turbine engines equipped with embedded electric machines.

BACKGROUND

A conventional commercial aircraft generally includes a fuselage, a pair of wings, and a propulsion system that provides thrust. The propulsion system typically includes at least two aircraft engines, such as turbofan jet engines. Each turbofan jet engine is typically mounted to a respective one of the wings of the aircraft, such as in a suspended position beneath the wing separated from the wing and fuselage.

Hybrid-electric propulsion systems are being developed to improve an efficiency of conventional commercial aircraft. Some hybrid electric propulsion systems include one or more electric machines each being operatively coupled with a rotating component of one of the aircraft engines. The inventors of the present disclosure have developed various configurations and/or methods to improve hybrid electric propulsion systems.

BRIEF DESCRIPTION

Aspects and advantages of the invention will be set forth in part in the following description, or may be obvious from the description, or may be learned through practice of the invention.

In one exemplary aspect of the present disclosure, a hybrid-electric propulsion system is provided. The hybrid-electric propulsion system includes a power converter and a propulsor. The propulsor includes a gas turbine engine having a shaft and one or more bearings supporting the shaft. Further, the propulsor includes an electric machine electrically coupled with the power converter. The electric machine includes a stator assembly and a rotor assembly. The rotor assembly has a rotor and a rotor connection assembly. The rotor connection assembly operatively couples the rotor with the shaft. The rotor connection assembly has an insulated joint for interrupting common mode electric current from flowing from the rotor to the shaft. A grounding device may be included to electrically ground the shaft.

These and other features, aspects and advantages of the present invention will become better understood with reference to the following description and appended claims. The accompanying drawings, which are incorporated in and constitute a part of this specification, illustrate embodiments of the invention and, together with the description, serve to explain the principles of the invention.

BRIEF DESCRIPTION OF THE DRAWINGS

A full and enabling disclosure of the present invention, including the best mode thereof, directed to one of ordinary skill in the art, is set forth in the specification, which makes reference to the appended figures, in which:

FIG. **1** provides a schematic top view of an aircraft according to various exemplary embodiments of the present disclosure;

FIG. **2** provides a schematic cross-sectional view of one of the hybrid-electric propulsors of the aircraft of FIG. **1**;

FIG. **3** provides a schematic cross-sectional view of a hybrid-electric propulsor that may be implemented with the aircraft of FIG. **1**;

FIG. **4** provides a schematic cross-sectional view of an electric machine embedded in a gas turbine engine of the hybrid-electric propulsor of FIG. **2**;

FIG. **5** provides a schematic cross-sectional view of an electric machine having an inner-rotor configuration and being embedded in a gas turbine engine according to various exemplary embodiments of the present disclosure;

FIG. **6** provides a close-up, cross-sectional view of an insulated joint of a rotor assembly of the electric machine taken from Section **5** of FIG. **4**;

FIG. **7** provides a close-up, cross-sectional view of an insulated joint of a rotor assembly of the electric machine according to one example embodiment of the present disclosure;

FIG. **8** provides a close-up, cross-sectional view of an insulated joint of a rotor assembly of the electric machine according to another example embodiment of the present disclosure;

FIG. **9** provides a schematic cross-sectional view of an electric machine embedded in a gas turbine engine according to various exemplary embodiments of the present disclosure;

FIG. **10** provides a close-up, cross-sectional view of a grounding device integrated into a carbon seal according to one example embodiment of the present disclosure;

FIG. **11** provides a close-up, cross-sectional view of a grounding device integrated into a carbon seal according to another example embodiment of the present disclosure;

FIG. **12** provides a close-up, cross-sectional view of a grounding device integrated into a carbon seal according to yet another example embodiment of the present disclosure;

FIG. **13** provides a close-up view of an example brush seal integrated as a grounding device according to various exemplary embodiments of the present disclosure;

FIG. **14** provides a flow diagram for a method of operating a hybrid-electric propulsor according to various exemplary embodiments of the present disclosure; and

FIG. **15** provides an example computing system according to example embodiments of the present disclosure.

DETAILED DESCRIPTION

Reference will now be made in detail to present embodiments of the invention, one or more examples of which are illustrated in the accompanying drawings. The detailed description uses numerical and letter designations to refer to features in the drawings. Like or similar designations in the drawings and description have been used to refer to like or similar parts of the invention.

The word "exemplary" is used herein to mean "serving as an example, instance, or illustration." Any implementation described herein as "exemplary" is not necessarily to be construed as preferred or advantageous over other implementations. Additionally, unless specifically identified otherwise, all embodiments described herein should be considered exemplary.

As used herein, the terms "first", "second", and "third" may be used interchangeably to distinguish one component from another and are not intended to signify location or importance of the individual components.

The terms "forward" and "aft" refer to relative positions within a gas turbine engine or vehicle, and refer to the normal operational attitude of the gas turbine engine or vehicle. For example, with regard to a gas turbine engine, forward refers to a position closer to an engine inlet and aft refers to a position closer to an engine nozzle or exhaust.

The terms "upstream" and "downstream" refer to the relative direction with respect to a flow in a pathway. For example, with respect to a fluid flow, "upstream" refers to the direction from which the fluid flows, and "downstream" refers to the direction to which the fluid flows. However, the terms "upstream" and "downstream" as used herein may also refer to a flow of electricity.

The singular forms "a", "an", and "the" include plural references unless the context clearly dictates otherwise.

Approximating language, as used herein throughout the specification and claims, is applied to modify any quantitative representation that could permissibly vary without resulting in a change in the basic function to which it is related. Accordingly, a value modified by a term or terms, such as "about", "approximately", and "substantially", are not to be limited to the precise value specified. In at least some instances, the approximating language may correspond to the precision of an instrument for measuring the value, or the precision of the methods or machines for constructing or manufacturing the components and/or systems. In at least some instances, the approximating language may correspond to the precision of an instrument for measuring the value, or the precision of the methods or machines for constructing or manufacturing the components and/or systems. For example, the approximating language may refer to being within a 1, 2, 4, 5, 10, 15, or 20 percent margin in either individual values, range(s) of values and/or endpoints defining range(s) of values.

Here and throughout the specification and claims, range limitations are combined and interchanged, such ranges are identified and include all the sub-ranges contained therein unless context or language indicates otherwise. For example, all ranges disclosed herein are inclusive of the endpoints, and the endpoints are independently combinable with each other.

The inventors of the present disclosure have developed various solutions for mitigating electric currents in bearings that support a shaft of a gas turbine engine to which an electric machine is coupled. As will be appreciated, common mode voltages can be produced by sinusoidal power supplies, such as power converter supplies. In this regard, an electric machine connected to a power converter supply is inherently subject to common mode voltages. Such common mode voltages can induce or drive electric currents in the bearings supporting the shaft to which the electric machine is coupled. Electric currents in bearings can cause pitting of bearing elements, such as the balls, rollers, races, etc., and consequently, premature failures of such bearings can occur. Accordingly, mitigation of such bearing electric currents is desirable.

Some conventional techniques for mitigating bearing currents in electric machines connected to power converters involve using ceramic bearings to support the shaft to which the electric machine is coupled. While such ceramic bearings are effective, in some instances, the use of ceramic bearings is not a viable option, e.g., when the bearings are shared with other components. Further, grounding brushes have been conventionally used in addition to ceramic bearings. However, like ceramic bearings, in some instances grounding brushes may not be allowed. The bearing electric current mitigation solutions developed by the inventors of the present disclosure provide alternative solutions to such conventional techniques.

In accordance with the inventive aspects of the present disclosure, various bearing mitigation solutions are provided. Such solutions can be used alone or in combination with one another. For instance, in one example aspect, a three-prong solution can be implemented. The three-prong solution can include 1) reducing the common mode voltage reaching the electric machine from the power converter connected thereto; 2) interrupting the common mode current conductive path between the rotor of the electric machine and the shaft to which it is coupled; and 3) grounding at least one of the members connecting the rotor of the electric machine and the shaft.

In one example aspect, under prong one, an electromagnetic interference filter of a power converter electrically coupled with the electric machine can reduce the common mode voltage reaching the electric machine. In addition, shielded cables or shielded bus bars electrically coupling the power converter and the electric machine can be used to further reduce the common mode voltage reaching the electric machine. Under prong two, a rotor connection assembly coupling the rotor of the electric machine with the shaft can include an insulated joint. The insulated joint includes one or more insulative members strategically arranged to interrupt common mode electric current from flowing to the shaft. Under prong three, a grounding device is positioned relative to the shaft or a component rotatable with the shaft to electrically ground the shaft. The grounding device can be integrated into an existing component of the engine. For instance, the grounding device can be integrated into a resolver, an encoder, or an existing seal, such as a carbon seal or a brush seal. Under this three-prong approach, bearing electric current mitigation can be achieved. Advantageously, this may enable achieving a specific fuel burn gain through the circulation of electric power between low speed and high speed spools without shortening the life of bearings supporting the spools. Moreover, this may enable mitigating the low speed bearing currents without modification of such bearings and with only minimal modification to the spool rotor structure.

FIG. **1** provides a schematic top view of an exemplary aircraft **100** as may incorporate one or more inventive aspects of the present disclosure. As shown in FIG. **1**, for reference, the aircraft **100** defines a longitudinal direction L**1** and a lateral direction L**2**. The lateral direction L**2** is perpendicular to the longitudinal direction L**1**. The aircraft **100** also defines a longitudinal centerline **114** that extends therethrough along the longitudinal direction L**1**. The aircraft **100** extends between a forward end **116** and an aft end **118**, e.g., along the longitudinal direction L**1**.

As depicted, the aircraft **100** includes a fuselage **112** that extends longitudinally from the forward end **116** of the aircraft **100** to the aft end **118** of the aircraft **100**. The aircraft **100** also includes an empennage **119** at the aft end **118** of the aircraft **100**. In addition, the aircraft **100** includes a wing assembly including a first, port side wing **120** and a second, starboard side wing **122**. The first and second wings **120**, **122** each extend laterally outward with respect to the longitudinal centerline **114**. The first wing **120** and a portion of the fuselage **112** together define a first side **124** of the aircraft **100** and the second wing **122** and another portion of the fuselage **112** together define a second side **126** of the aircraft

100. For the embodiment depicted, the first side **124** of the aircraft **100** is configured as the port side of the aircraft **100** and the second side **126** of the aircraft **100** is configured as the starboard side of the aircraft **100**.

The aircraft **100** includes various control surfaces. For this embodiment, each wing **120**, **122** includes one or more leading edge flaps **128** and one or more trailing edge flaps **130**. The aircraft **100** further includes, or more specifically, the empennage **119** of the aircraft **100** includes a vertical stabilizer **132** having a rudder flap (not shown) for yaw control and a pair of horizontal stabilizers **134** each having an elevator flap **136** for pitch control. The fuselage **112** additionally includes an outer surface or skin **138**. It should be appreciated that in other exemplary embodiments of the present disclosure, the aircraft **100** may additionally or alternatively include any other suitable configuration. For example, in other embodiments, the aircraft **100** may include any other control surface configuration.

The exemplary aircraft **100** of FIG. **1** also includes a hybrid-electric propulsion system **150**. For this embodiment, the hybrid-electric propulsion system **150** has a first propulsor **200**A and a second propulsor **200**B both operable to produce thrust. The first propulsor **200**A is mounted to the first wing **120** and the second propulsor **200**B is mounted to the second wing **122**. Moreover, for the embodiment depicted, the first propulsor **200**A and second propulsor **200**B are each configured in an underwing-mounted configuration. However, in other example embodiments, one or both of the first and second propulsors **200**A, **200**B may be mounted at any other suitable location in other exemplary embodiments.

The first propulsor **200**A includes a gas turbine engine **210**A and one or more electric machines, such as electric machine **300**A operatively coupled with the gas turbine engine **210**A. The electric machine **300**A can be an electric generator, an electric motor, or a combination generator/motor. For this example embodiment, the electric machine **300**A is a combination generator/motor. In this manner, when operating as an electric generator, the electric machine **300**A can generate electrical power when driven by the gas turbine engine **210**A. When operating as an electric motor, the electric machine **300**A can drive or motor the gas turbine engine **210**A.

Likewise, the second propulsor **200**B includes a gas turbine engine **210**B and one or more electric machines, such as electric machine **300**B operatively coupled with the gas turbine engine **210**B. The electric machine **300**B can be an electric generator, an electric motor, or a combination generator/motor. For this example embodiment, the electric machine **300**B is a combination generator/motor. In this manner, when operating as an electric generator, the electric machine **300**B can generate electrical power when driven by the gas turbine engine **210**B. When operating as an electric motor, the electric machine **300**B can drive or motor a spool of the gas turbine engine **210**B. Electric machine **300**B can be configured and can operate in a similar manner as electric machine **300**A described herein.

The hybrid-electric propulsion system **150** further includes an electric energy storage unit **180** (only one shown in FIG. **1**) electrically connectable to the electric machines **300**A, **300**B, and in some embodiments, other electrical loads. In some exemplary embodiments, the electric energy storage unit **180** may include one or more batteries. Additionally, or alternatively, the electric energy storage units **180** may include one or more supercapacitor arrays, one or more ultracapacitor arrays, or both. For the hybrid-electric propulsion system **150** described herein, the electric energy storage unit **180** is configured to store a relatively large amount of electrical power. For example, in certain exemplary embodiments, the electric energy storage unit **180** may be configured to store at least about fifty kilowatt hours of electrical power, such as at least about sixty-five kilowatt hours of electrical power, such as at least about seventy-five kilowatts hours of electrical power, and up to about one thousand kilowatt hours of electrical power.

The hybrid-electric propulsion system **150** also includes a power management system having a controller **182** and a power bus **184**. The electric machines **300**A, **300**B, the electric energy storage unit **180**, and the controller **182** are each electrically connectable to one another through one or more electric lines **186** of the power bus **184**. For instance, the power bus **184** may include various switches or other power electronics movable to selectively electrically connect the various components of the hybrid-electric propulsion system **150**. Particularly, as shown in FIG. **1**, a first power converter **188**A of the power bus **184** is electrically coupled or connectable with the electric machine **300**A via one or more electric lines **186** and a second power converter **188**B of the power bus **184** is electrically coupled or connectable with the electric machine **300**B via one or more electric lines **186**. The power bus **184** may include other power electronics, such as inverters, converters, rectifiers, etc., for conditioning or converting electrical power within the hybrid-electric propulsion system **150**.

The controller **182** is configured to control the power electronics to distribute electrical power between the various components of the hybrid-electric propulsion system **150**. For example, the controller **182** may control the power electronics of the power bus **184** to provide electrical power to, or draw electrical power from, the various components, such as the electric machines **300**A, **300**B, to operate the hybrid-electric propulsion system **150** between various operating modes and perform various functions. Such is depicted schematically as the electric lines **186** of the power bus **184** extend through the controller **182**.

The controller **182** can form a part of a computing system **190** of the aircraft **100**. The computing system **190** of the aircraft **100** can include one or more processors and one or more memory devices embodied in one or more computing devices. For instance, as depicted in FIG. **1**, the computing system **190** includes controller **182** as well as other computing devices, such as computing device **192**. The computing system **190** can include other computing devices as well, such as engine controllers (not shown). The computing devices of the computing system **190** can be communicatively coupled with one another via a communication network. For instance, computing device **192** is located in the cockpit of the aircraft **100** and is communicatively coupled with the controller **182** of the hybrid-electric propulsion system **150** via a communication link **194** of the communication network. The communication link **194** can include one or more wired or wireless communication links.

For this embodiment, the computing device **192** is configured to receive and process inputs, e.g., from a pilot or other crew members, and/or other information. In this manner, as one example, the one or more processors of the computing device **192** can receive an input indicating a command to change a thrust output of the first and/or second propulsors **200**A, **200**B and can cause, in response to the input, the controller **182** to control the electrical power drawn from or delivered to one or both of the electric machines **300**A, **300**B to ultimately change the thrust output of one or both of the propulsors **200**A, **200**B.

The controller **182** and other computing devices of the computing system **190** of the aircraft **100** may be configured in substantially the same manner as the exemplary computing devices of the computing system **700** described below with reference to FIG. **15** (and may be configured to perform one or more of the functions of the exemplary method (**600**) described below).

FIG. **2** provides a schematic view of the first propulsor **200**A of the hybrid-electric propulsion system **150** of the aircraft **100** of FIG. **1**. Although the first propulsor **200**A is shown, it will be appreciated that the second propulsor **200**B can be configured in the same or similar manner as the first propulsor **200**A depicted in FIG. **2**. The exemplary gas turbine engine of FIG. **2** is configured as a single unducted rotor engine **210**A defining an axial direction A, a radial direction R, and a circumferential direction C. The engine **210**A also defines a central longitudinal axis **214**.

As shown in FIG. **2**, the engine **210**A takes the form of an open rotor propulsion system and has a rotor assembly **212** that includes an array of airfoils arranged around the central longitudinal axis **214** of engine **210**A. More particularly, the rotor assembly **212** includes an array of rotor blades **216** arranged around the central longitudinal axis **214** of the engine **210**A. Moreover, as will be explained in more detail below, the engine **210**A also includes a non-rotating vane assembly **218** positioned aft of the rotor assembly **212** (i.e., non-rotating with respect to the central axis **214**). The non-rotating vane assembly **218** includes an array of airfoils also disposed around central axis **214**. More specifically, the vane assembly **218** includes an array of vanes **220** disposed around central longitudinal axis **214**.

The rotor blades **216** are arranged in typically equally-spaced relation around the central longitudinal axis **214**, and each blade has a root **222** and a tip **224** and a span defined therebetween. Similarly, the vanes **220** are also arranged in typically equally-spaced relation around the central longitudinal axis **214**, and each has a root **226** and a tip **228** and a span defined therebetween. The rotor assembly **212** further includes a hub **245** located forward of the plurality of rotor blades **216**.

Additionally, the engine **210**A includes a turbomachine **230** having a core (or high pressure/high speed system) **232** and a low pressure/low speed system. It will be appreciated that as used herein, the terms "speed" and "pressure" are used with respect to the high pressure/high speed system and low pressure/low speed system interchangeably. Further, it will be appreciated that the terms "high" and "low" are used in this same context to distinguish the two systems, and are not meant to imply any absolute speed and/or pressure values.

The core **232** generally includes a high speed compressor **234**, a high speed turbine **236**, and a high speed shaft **238** extending therebetween and connecting the high speed compressor **234** and high speed turbine **236**. The high speed compressor **234**, the high speed turbine **236**, and the high speed shaft **238** may collectively be referred to as a high speed spool **253** of the engine. Further, a combustion section **240** is located between the high speed compressor **234** and high speed turbine **236**. The combustion section **240** may include one or more configurations for receiving a mixture of fuel and air, and providing a flow of combustion gasses through the high speed turbine **236** for driving the high speed spool **253**.

The low speed system includes a low speed turbine **242**, a low speed compressor **244** or booster, and a low speed shaft **246** extending between and connecting the low speed compressor **244** and low speed turbine **242**. The low speed compressor **244**, the low speed turbine **242**, and the low speed shaft **246** may collectively be referred to as a low speed spool **255** of the engine.

Although the engine **210**A is depicted with the low speed compressor **244** positioned forward of the high speed compressor **234**, in certain embodiments the compressors **234**, **244** may be in an interdigitated arrangement. Additionally, or alternatively, although the engine **210**A is depicted with the high speed turbine **236** positioned forward of the low speed turbine **242**, in certain embodiments the turbines **236**, **242** may similarly be in an interdigitated arrangement.

In order to support the rotating components of the engine **210**A, the engine **210**A includes a plurality of bearings coupling the rotating components to various structural components. Specifically, as depicted in FIG. **2**, bearings **290** support and facilitate rotation of the low speed shaft **246**. Further, bearings **292** support and facilitate rotation of the high speed shaft **238**. Although the bearings **290**, **292** are illustrated as being located generally at forward and aft ends of their associated shafts **246**, **238**, the bearings **290**, **292** may be located at any desired location along their associated shafts. Moreover, in some embodiments, one or more additional bearings other than the bearings **290** shown in FIG. **2** can be used to support the low speed shaft **246**. For instance, in some embodiments, an additional bearing can be positioned at a central or mid-span region of the low speed shaft **246** provides support thereto. Similarly, one or more additional bearings other than the bearings **290** shown in FIG. **2** can be used to support the high-speed shaft **238**. The bearings **290**, **290** can be any suitable type of bearings, such as air bearings, oil-lubricated bearings, etc.

Referring still to FIG. **2**, the turbomachine **230** is generally encased in a cowl **248**. Moreover, it will be appreciated that the cowl **248** defines at least in part an inlet **250** and an exhaust **252**, and includes a turbomachinery flowpath **254** extending between the inlet **250** and the exhaust **252**. The inlet **250** is, for the embodiment shown, an annular or axisymmetric 360 degree inlet **250** located between the rotor assembly **212** and the fixed or stationary vane assembly **218** along the axial direction A, and provides a path for incoming atmospheric air to enter the turbomachinery flowpath **254** (and compressors **244**, **234**, combustion section **240**, and turbines **236**, **242**) inwardly of the guide vanes **220** along the radial direction R. Such a location may be advantageous for a variety of reasons, including management of icing performance as well as protecting the inlet **250** from various objects and materials as may be encountered in operation. In other embodiments, however, the inlet **250** may be positioned at any other suitable location, e.g., aft of the vane assembly **218**, arranged in a non-axisymmetric manner, etc.

As depicted, the rotor assembly **212** is driven by the turbomachine **230**, and more specifically, the low speed spool **255** of the turbomachine **230**. More specifically, for this embodiment, the engine **210**A includes a power gearbox **256**. The rotor assembly **212** is driven by the low speed spool **255** of the turbomachine **230** across the power gearbox **256**. In such a manner, the rotating rotor blades **216** of the rotor assembly **212** may rotate around the central longitudinal axis **214** and generate thrust to propel engine **210**A, and hence, the aircraft **100** (FIG. **1**) to which it is associated, in a forward direction F. The power gearbox **256** can include a gearset for decreasing a rotational speed of the low speed spool **255** relative to the low speed turbine **242** such that the rotor assembly **212** may rotate at a slower rotational speed than the low speed spool **255**.

As briefly noted above, the engine **210**A includes vane assembly **218**. The vane assembly **218** extends from the

cowl **248** and is positioned aft of the rotor assembly **212**. The vanes **220** of the vane assembly **218** may be mounted to a stationary frame or other mounting structure and do not rotate relative to the central longitudinal axis **214**. For reference purposes, FIG. **2** depicts the forward direction with arrow F, which in turn defines the forward and aft portions of the engine **210**A. As shown in FIG. **2**, the rotor assembly **212** is located forward of the turbomachine **230** in a "puller" configuration and the exhaust **252** is located aft of the guide vanes **220**. The vanes **220** of the vane assembly **218** are aerodynamically contoured to straighten out an airflow (e.g., reducing a swirl in the airflow) from the rotor assembly **212** to increase an efficiency of the engine **210**A. For example, the vanes **220** may be sized, shaped, and configured to impart a counteracting swirl to the airflow from the rotor blades **216** so that in a downstream direction aft of both rows of airfoils (e.g., blades **216**, vanes **220**) the airflow has a greatly reduced degree of swirl, which may translate to an increased level of induced efficiency.

In some embodiments, it may be desirable that the rotor blades **216**, the vanes **220**, or both, incorporate a pitch change mechanism such that the airfoils (e.g., blades **216**, vanes **220**, etc.) can be rotated with respect to an axis of pitch rotation either independently or in conjunction with one another. Such pitch change can be utilized to vary thrust and/or swirl effects under various operating conditions, including to adjust a magnitude or direction of thrust produced at the rotor blades **216**, or to provide a thrust reversing feature which may be useful in certain operating conditions, such as upon landing an aircraft, or to desirably adjust acoustic noise produced at least in part by the rotor blades **216**, the vanes **220**, or aerodynamic interactions from the rotor blades **216** relative to the vanes **220**. More specifically, for the embodiment of FIG. **2**, the rotor assembly **212** is depicted with a pitch change mechanism **258** for rotating the rotor blades **216** about their respective pitch axes **260**, and the vane assembly **218** is depicted with a pitch change mechanism **262** for rotating the vanes **220** about their respective pitch axes **264**.

The exemplary single rotor unducted engine **210**A depicted in FIG. **2** is provided by way of example only. Accordingly, it will be appreciated that the engine **210**A may have other suitable configurations. For example, in other example embodiments, the engine **210**A can have other suitable numbers of shafts or spools, turbines, compressors, etc.; fixed-pitch blades or vanes **216**, **220**, or both; a direct-drive configuration (i.e., may not include the gearbox **256**); etc. For example, in other exemplary embodiments, the engine **210**A may be a three-spool engine, having an intermediate speed compressor and/or turbine. In such a configuration, it will be appreciated that the terms "high" and "low," as used herein with respect to the speed and/or pressure of a turbine, compressor, or spool are terms of convenience to differentiate between the components, but do not require any specific relative speeds and/or pressures, and are not exclusive of additional compressors, turbines, and/or spools or shafts.

Additionally or alternatively, in other exemplary embodiments, any other suitable gas turbine engine may be provided. For example, in other exemplary embodiments, the gas turbine engine may be a turboshaft engine, a turboprop engine, turbojet engine, etc. Moreover, for example, although the engine is depicted as a single unducted rotor engine, in other embodiments, the engine may include a multi-stage open rotor configuration, and aspects of the disclosure described hereinbelow may be incorporated therein.

Further, in other exemplary embodiments, the engine **210**A may be configured as a ducted turbofan engine. For example, referring briefly to FIG. **3**, an engine **210**A in accordance with another exemplary embodiment of the present disclosure is depicted. The exemplary embodiment of FIG. **3** may be configured in substantially the same manner as the exemplary engine **210**A described above with respect to FIG. **2** except as noted below. The same or similar reference numerals may refer to the same or similar parts. As shown, the engine **210**A of FIG. **3** includes a nacelle **280** circumferentially surrounding at least in part the rotor assembly **212** and turbomachine **230**, defining a bypass passage **282** therebetween. The vanes **220** of the vane assembly **218** extend between and connect the nacelle **280** with the cowl **248**.

Referring again to FIG. **2**, as noted, the first propulsor **200**A includes electric machine **300**A operably coupled with a rotating component thereof. In this regard, the first propulsor **200**A is an aeronautical hybrid-electric propulsion machine. Particularly, as shown in FIG. **2**, the electric machine **300**A is operatively coupled with the low speed spool **255** of the gas turbine engine **210**A, and more particularly, the low speed shaft **246** of the low speed spool **255**. As depicted, the electric machine **300**A is embedded within the core of the gas turbine engine **210**A. Specifically, the electric machine **300**A is positioned inward of the turbomachinery flowpath **254** along the radial direction R. Moreover, for this embodiment, the electric machine **300**A is positioned generally at the aft end of the gas turbine engine **210**A and is at least partially overlapping with or aft of the low pressure turbine **242** along the axial direction A. However, in other exemplary embodiments, the electric machine **300**A may be positioned at other suitable locations within the gas turbine engine **210**A. For instance, in some embodiments, the electric machine **300**A can be coupled with the low speed spool **255** in other suitable locations. For instance, in some embodiments, the electric machine **300**A can be positioned forward of the low pressure compressor **244** along the axial direction A and inward of the turbomachinery flowpath **254** along the radial direction R. Further, as shown in FIG. **2**, the electric machine **300**A operatively coupled with the low speed shaft **246** is electrically coupled with the power bus **184** and is electrically connected to its associated power converter supply **188**A.

In addition or alternatively to the gas turbine engine **210**A having electric machine **300**A coupled to the low speed spool **255**, in some embodiments, the gas turbine engine **210**A can include an electric machine **302**A operatively coupled with the high speed spool **253** of the gas turbine engine **210**A, and more particularly, the high speed shaft **238** of the high speed spool **253**. As depicted in FIG. **2**, the electric machine **302**A is embedded within the core of the gas turbine engine **210**A and is operatively coupled with the high speed shaft **238**. The electric machine **302**A is positioned inward of the turbomachinery flowpath **254** along the radial direction R and is positioned forward of the combustion section **240** along the axial direction A. However, in other exemplary embodiments, the electric machine **302**A may be positioned at other suitable locations within the gas turbine engine **210**A. Although not shown, the electric machine **302**A operatively coupled with the high speed shaft **238** can be electrically coupled with the power bus **184** and can be electrically connected to its own power converter supply.

Like the electric machine **300**A mechanically coupled with the low speed spool **255**, the electric machine **302**A mechanically coupled with the high speed spool **253** can be

an electric motor operable to drive or motor the high speed shaft **238**, e.g., during an engine burst. In other embodiments, the electric machine **302**A can be an electric generator operable to convert mechanical energy into electrical energy. In this way, electrical power generated by the electric machine **302**A can be directed to various engine and/or aircraft systems. In some embodiments, the electric machine **302**A can be a motor/generator with dual functionality.

FIG. **4** provides a close-up, schematic view of the electric machine **300**A embedded within the gas turbine engine **210**A. As depicted, the electric machine **300**A defines a centerline **304**, which is aligned with or coaxial with the central longitudinal axis **214** of the gas turbine engine **210**A in this example embodiment. The electric machine **300**A includes a rotor assembly **310** and a stator assembly **340**. The rotor assembly **310** includes a rotor **312** and the stator assembly **340** includes a stator **342**. The rotor **312** of the rotor assembly **310** and the stator **342** of the stator assembly **340** together define an air gap **306** therebetween. Moreover, for this embodiment, the rotor **312** includes a plurality of magnets **314**, such as a plurality of permanent magnets, and the stator **342** includes a plurality of windings or coils **344**. As such, the electric machine **300**A may be referred to as a permanent magnet electric machine. However, in other exemplary embodiments, the electric machine **300**A may be configured in any suitable manner. For example, the electric machine **300**A may be configured as an electromagnetic electric machine, including a plurality of electromagnets and active circuitry, as an induction type electric machine, a switched reluctance type electric machine, a synchronous AC electric machine, an asynchronous electric machine, or as any other suitable type of electric machine.

The rotor assembly **310** also includes a rotor connection assembly **316**. Generally, the rotor connection assembly **316** operatively couples the rotor **312** with the low speed shaft **246**. As the rotor assembly **310** of the electric machine **300**A is coupled with or attached to the low speed shaft **246**, the rotor assembly **310** is rotatable with the low speed shaft **246**. As shown, the rotor connection assembly **316** has a rotor hub **318** and a rotor connection member **320**. The rotor hub **318** is connected to the low speed shaft **246** and the rotor connection member **320** is connected to the rotor **312**. The rotor hub **318** and the rotor connection member **320** are mechanically coupled or connected with one another by an insulated joint **322**. Notably, the insulated joint **322** of the rotor connection assembly **316** interrupts common mode electric current from flowing between the rotor **312** and the low speed shaft **246**, e.g., from the rotor **312** to the low speed shaft **246**. In this way, common mode electric current is prevented from flowing to one or more bearings supporting the low speed shaft **246**, among other components. The insulated joint **322** will be further described below with reference to FIG. **6**.

For this embodiment, the rotor hub **318** of the rotor connection assembly **316** is connected to the low speed shaft **246** through a splined connection. More particularly, the rotor hub **318** includes a connection portion having a plurality of teeth **324**. Similarly, the low speed shaft **246** includes a connection portion having a plurality of teeth **247**. The plurality of teeth **324** of the rotor hub **318** are configured to engage with the plurality of teeth **247** of the low speed shaft **246**, fixing the two components to one another. In alternative embodiments, the rotor hub **318** may be coupled to the low speed shaft **246** in any other suitable manner.

The stator assembly **340** also includes a stator connection assembly **346**. The stator connection assembly **346** includes a stator connection member **348** that supports the stator **342**. The stator connection member **348** is connected to a structural support member **266** of the turbine section of the gas turbine engine **210**A. The structural support member **266** can be configured as part of an aft frame assembly of the gas turbine engine **210**A. The aft frame assembly can include an aft strut **268** (FIG. **2**) extending through the turbomachinery flowpath **254** along the radial direction R. The aft frame strut **268** provides structural support for the aft end of the cowl **248**.

The gas turbine engine **210**A further includes a cavity wall **270** surrounding at least a portion of the electric machine **300**A. More specifically, the cavity wall **270** substantially completely surrounds the electric machine **300**A, extending from a location proximate a forward end of the electric machine **300**A to a location aft of the electric machine **300**A along the axial direction A. The cavity wall **270** may function as, e.g., a cooling air cavity wall, a sump for cooling fluid, a protective cover for the electric machine **300**A, etc. In some embodiments, the gas turbine engine **210**A may further include a second cavity wall (not shown) to form a buffer cavity surrounding the electric machine **300**A. The buffer cavity formed by the second cavity wall may thermally protect the electric machine **300**A.

During certain operations of the gas turbine engine **210**A, the low speed shaft **246** rotates the rotor assembly **310** of the electric machine **300**A, allowing the electric machine **300**A to generate electrical power. Thus, the electric machine **300**A is operable in a generator mode. In some embodiments, in addition or alternatively to being operable in a generator mode, the electric machine **300**A is operable in a drive mode during certain operations of the gas turbine engine **210**A. In a drive mode, the rotor assembly **310** of the electric machine **300**A drives the low speed shaft **246**. The power converter **188**A (FIG. **2**) can be controlled to provide electrical power to the electric machine **300**A via the electric lines **186**, e.g., when the electric machine **300**A is operating in a drive mode, and electrical power generated by the electric machine **300**A can be carried or transmitted to the power converter **188**A (FIG. **2**) and ultimately to various electrical loads via the electric lines **186**, e.g., when the electric machine **300**A is operating in a generator mode. As shown best in FIG. **2**, the electric lines **186** of the power bus **184** may extend through the turbomachinery flowpath **254** (e.g., through the aft frame strut **268**) and electrically connect the electric machine **300**A to the power converter **188**A and ultimately to one or more electrical loads (accessory systems, electric/hybrid-electric propulsion devices, etc.), electrical sources (other electric machines, electric energy storage units, etc.), or both.

Although the electric machine **300**A has been described and illustrated in FIG. **4** as having a particular configuration, it will be appreciated that the inventive aspects of the present disclosure may apply to electric machines having alternative configurations. For instance, the stator assembly **340** and/or rotor assembly **310** may have different configurations or may be arranged in a different manner than illustrated in FIG. **4**. As one example, the electric machine **300**A may have an inner-rotor configuration as shown in FIG. **5** rather than the outer-rotor configuration shown in FIG. **4**. In an inner-rotor configuration, as depicted in FIG. **5**, the rotor **312** is positioned inward of the stator **342** along the radial direction R. In an outer-rotor configuration, as shown in FIG. **4**, the rotor **312** is positioned outward of the stator **342** along the radial direction R. As another example, in some embodiments, the electric machine **300**A may have a tapered configuration in which the rotor **312** and the stator **342** may

extend lengthwise along the axial direction A at an angle with respect to the central longitudinal axis **214**, e.g., so that they are not oriented parallel with the central longitudinal axis **214**.

As noted previously, the inventors of the present disclosure have developed various solutions for mitigating electric currents in bearings that support a shaft of a gas turbine engine to which an electric machine is coupled. Such solutions can be used alone or in combination with one another. For instance, in one example aspect, a three-prong solution can be implemented. The three-prong solution can include 1) reducing the common mode voltage reaching the electric machine from the power converter connected thereto; 2) interrupting the common mode current conductive path between the rotor of the electric machine and the shaft to which it is coupled; and 3) grounding at least one of the members connecting the rotor of the electric machine and the shaft.

By way of example and with reference to FIGS. **2** and **4**, under the first prong, the common mode voltage reaching the electric machine **300**A from its associated power converter **188**A can be reduced via an electromagnetic interference filter, or EMI filter. For this embodiment, for example, the power converter **188**A has an electromagnetic interference filter **189**A operable to reduce a common mode voltage reaching the electric machine **300**A from the power converter **188**A. Moreover, in addition, the power converter **188**A can be electrically coupled with the electric machine **300**A by one or more shielded cables. Particularly, as shown best in FIG. **4**, the electric line **186** coupling the electric machine **300**A with the power converter **188**A can include one or more shielded cables. In addition or alternatively to shielded cables, the power converter **188**A can be electrically coupled with the electric machine **300**A by one or more shielded bus bars.

Under the second prong, with reference to FIGS. **4** and **5**, the common mode current conductive path between the rotor **312** of the electric machine **300**A and the low speed shaft **246** can be interrupted by insulated joint **322**. FIG. **6** provides a close-up, cross-sectional view of the insulated joint **322** taken from Section **5** of FIG. **4**. As depicted, the insulated joint **322** is an insulated bolted joint in this embodiment. The insulated joint **322** is collectively formed by a bolt **330**, various insulative components, and components of the rotor connection assembly **316**.

As shown best in FIG. **6**, the rotor hub **318** includes a hub flange **326** and the rotor connection member **320** includes a connection flange **328**. The hub flange **326** extends in a plane orthogonal to the axial direction A. Likewise, the connection flange **328** extends in a plane orthogonal to the axial direction A. The hub flange **326** and the connection flange **328** are in communication with one another so that bolt **330** may extend through the hub flange **326** and the connection flange **328**. More particularly, the hub flange **326** defines an aperture that is in communication with an aperture defined by the connection flange **328**. The bolt **330** extends through the aperture defined by the hub flange **326** and through the aperture defined by the connection flange **328** to secure the rotor connection member **320** with the rotor hub **318**. A nut **338** can be threaded onto the bolt **330** to further secure the rotor connection member **320** with the rotor hub **318**.

The bolt **330** has a head **332** and a shank **334** extending from the head **332**. The head **332** has a larger diameter than the shank **334**. For this embodiment, the head **332** of the bolt **330** is positioned on the hub flange side of the insulated joint **322**. The shank **334** of the bolt **330** extends through the hub flange **326** and the connection flange **328** and a distal end of the shank **334** is positioned on the connection flange side of the insulated joint **322**. As depicted, the nut **338** is secured to the portion of the shank **334** positioned on the connection flange side of the insulated joint **322**. In this regard, the head **332** of the bolt **330** and the nut **338** clamp or otherwise couple the rotor hub **318** and the rotor connection member **320** together. The bolt **330** and the nut **338** may be formed of an electrically conductive material, such as a suitable metallic material. In other embodiments, the head **332** of the bolt **330** and the nut **338** may be positioned on opposite sides than what is shown in FIG. **6**.

As further shown in FIG. **6**, the insulated joint **322** includes a plurality of insulative members. Each of the insulative members are formed of an electrically insulative material, such as a ceramic material. Generally, the insulative members electrically isolate the rotor connection member **320** and the rotor hub **318**, and thus, the rotor **312** is electrically isolated from the low speed shaft **246**. In this regard, the common mode current conductive path between the rotor **312** of the electric machine **300**A and the low speed shaft **246** can be interrupted by insulated joint **322**.

For the depicted embodiment of FIG. **6**, the insulative members include a hub shim **333**, an interface shim **335**, and a connection shim **337**. As noted above, each insulative member, including the hub shim **333**, interface shim **335**, and connection shim **337**, is formed of an insulative material. The hub shim **333** is positioned between the head **332** of the bolt **330** and the hub flange **326**, e.g., along the axial direction A. The hub shim **333** extends a distance along the radial direction R so that the head **332** of the bolt **330** does not physically contact the hub flange **326** of the rotor hub **318** as shown in FIG. **6**.

Generally, the interface shim **335** is positioned between the rotor hub **318** and the rotor connection member **320** so that they do not physically contact one another. Particularly, as depicted, the interface shim **335** is positioned between the hub flange **326** of the rotor hub **318** and the connection flange **328** of the rotor connection member **320**, e.g., along the axial direction A. In addition, for this embodiment, the interface shim **335** is also positioned between an outer member **329** of the hub flange **326** and the rotor connection member **320**, e.g., along the radial direction R. In this manner, the interface shim **335** has an L-shaped cross-section in this example embodiment. However, in other example embodiments, the interface shim **335** may have any suitable cross-sectional shape.

The connection shim **337** is positioned between the connection flange **328** and the nut **338**, e.g., along the axial direction A. The connection shim **337** extends a distance along the radial direction R so that the nut **338** does not physically contact the connection flange **328** of the rotor connection member **320** as shown in FIG. **6**.

The hub shim **333**, the interface shim **335**, and the connection shim **337** may each define an aperture. The apertures defined by the shims **333**, **335**, **337** may be in communication with one another as well as the apertures defined by the hub flange **326** and the connection flange **328**. In this manner, the bolt **330** may extend through the hub shim **333**, the hub flange **326**, the interface shim **335**, the connection flange **328**, and the connection shim **337**. The bolt **330** may also extend through and may be threadingly engaged with the nut **338**.

Furthermore, for this embodiment, the threads or circumference of the shank **334** of the bolt **330** is coated with an insulative coating **339**, such as a ceramic coating. As depicted in FIG. **6**, the insulative coating **339** may extend substantially along the axial length of the shank **334**. The

shank **334** may engage (e.g., threadingly engage) the hub flange **326**, the connection flange **328**, and the nut **338**, all of which may be formed of electrically conductive material. The insulative coating **339** on the bolt **330** prevents electric current from flowing between these electrically conductive elements. In this way, the insulative coating **339** on the bolt **330** and the insulative members, including the hub shim **333**, the interface shim **335**, and the connection shim **337**, collectively electrically isolate the rotor connection member **320** from the rotor hub **318**. As a result, the common mode current conductive path between the rotor **312** of the electric machine **300**A and the low speed shaft **246** can be interrupted by insulated joint **322**. Advantageously, this prevents common mode electric current from reaching the bearings **290** (FIG. **2**) supporting the low speed shaft **246**, among other benefits.

In some alternative embodiments, the entire outer surface of the bolt **330** can be coated with the insulative coating **339**. In yet other embodiments, the bolt **330** is not coated with the insulative coating **339** but rather an insulative sleeve (not shown) may extend circumferentially around and axially along the shank **334** of the bolt **330** so that the bolt **330** does not engage the other electrically conductive components of the insulated joint **322**.

In some further embodiments, the hub flange **326** and the connection flange **328** can be coated with the insulative coating **339**, particularly around the circumference of the apertures **317**, **319** through which the bolt **330** extends. The hub flange **326** and the connection flange **328** can be coated with the insulative coating **339** in addition or alternatively to the bolt **330** being coated with the insulative coating **339**. In yet other embodiments, the insulated joint **322** does not include any insulative members but rather the bolt **330**, the nut **338**, and the flanges **326**, **328** are all coated with the insulative coating **339** where they physically engage one another. The insulative coating **339** can be applied using a suitable technique, such as by electrophoretic deposition or via an electrostatic coating process. Such techniques can provide an insulation power coating on the desired surfaces ultimately to electrically isolate the rotor connection member **320** and the rotor hub **318** so that the rotor **312** is electrically isolated from the low speed shaft **246**. In this way, the common mode current conductive path between the rotor **312** of the electric machine **300**A and the low speed shaft **246** can be interrupted by insulated joint **322**.

In some further embodiments, the rotor hub **318** and/or the rotor connection member **320** can include one or more insulative layers. For the depicted embodiment of FIG. **7**, for example, the hub flange **326** includes a plurality of double-layered insulative layers, including hub-side insulative layers, interface-side insulative layers, and aperture insulative layers. In FIG. **7**, the bolt **330** and associated nut **338** (see FIG. **6**) are removed for illustrative clarity. The hub-side insulative layers include an outer layer **400** and an inner layer **402**. The outer layer **400** forms the outer surface of the hub-side of the hub flange **326**. A metallic layer **404** is sandwiched or positioned between the outer layer **400** and the inner layer **402**, e.g., along the axial direction A. The interface-side insulative layers include an outer layer **410** and an inner layer **412**. The outer layer **410** forms the outer surface of the interface-side of the hub flange **326**. The outer layer **410** and the inner layer **412** may also extend along the outer member **329** of the hub flange **326**. A metallic layer **414** is sandwiched or positioned between the outer layer **410** and the inner layer **412**, e.g., along the axial direction A and along the radial direction R along the outer member **329** of the hub flange **326**. In addition, the aperture insulative layers include an outer layer **420** and an inner layer **422**. The aperture insulative layers generally extend circumferentially around the circumference of aperture **317** defined by the hub flange **326** of the rotor hub **318**. A metallic layer **424** is sandwiched or positioned between the outer layer **420** and the inner layer **422**, e.g., along the radial direction R. In some embodiments, the aperture insulative layers may include only a single layer (e.g., the outer layer **420**) extending circumferentially along the circumference defining the aperture **317**. Each insulative layer of the rotor hub **318** can be formed of an electrically insulative material, such as a ceramic material.

As further depicted in FIG. **7**, the connection flange **328** includes connection-side insulative layers, interface-side insulative layers, and aperture insulative layers. The connection-side insulative layers include an outer layer **430** and an inner layer **432**. The outer layer **430** forms the outer surface of the connection-side of the connection flange **328**. A metallic layer **434** is sandwiched or positioned between the outer layer **430** and the inner layer **432**, e.g., along the axial direction A. The interface-side insulative layers include an outer layer **440** and an inner layer **442**. The outer layer **440** forms the outer surface of the interface-side of the connection flange **328**. The outer layer **440** and the inner layer **442** may also extend lengthwise along the axial direction A so as to extend complementary to the interface insulative layers **410**, **412** extending along the outer member **329** of the hub flange **326**. A metallic layer **444** is sandwiched or positioned between the outer layer **440** and the inner layer **442**. Furthermore, the aperture insulative layers include an outer layer **450** and an inner layer **452**. The aperture insulative layers generally extend circumferentially around the circumference of aperture **319** defined by the connection flange **328** of the rotor connection member **320**. A metallic layer **454** is sandwiched or positioned between the outer layer **450** and the inner layer **452**, e.g., along the radial direction R. In some embodiments, the aperture insulative layers may include only a single layer (e.g., the outer layer **450**) extending circumferentially along the circumference defining the aperture **319**. Each insulative layer of the rotor connection member **320** can be formed of an electrically insulative material, such as a ceramic material.

Notably, the strategic arrangement of the insulative layers of the rotor hub **318** and the rotor connection member **320** can electrically isolate the rotor connection member **320** and the rotor hub **318**, and thus, the rotor **312** is electrically isolated from the low speed shaft **246**. In this regard, the common mode current conductive path between the rotor **312** of the electric machine **300**A and the low speed shaft **246** can be interrupted by insulated joint **322**. Moreover, in such embodiments, the bolt **330** and corresponding nut **338** (not pictured in FIG. **7**; see FIG. **6**) can but need not be coated with an insulative material. Further, in such embodiments, insulative members, such as the insulative shims of FIG. **6**, can but need not be arranged between components as shown in FIG. **6**. Further, the double-layered arrangement of the insulative layers depicted in FIG. **7** allows for an outer layer to be easily replaced when worn and also provides an extra layer of insulation, among other benefits.

In some alternative embodiments, as shown in FIG. **8**, the hub flange **326** and the connection flange **328** both include a plurality of single-layered insulative layers. Particularly, the hub flange **326** includes a hub-side insulative layer **460**, an interface-side insulative layer **462**, and an aperture insulative layer **464**. The connection flange **328** includes a connection-side insulative layer **466**, an interface-side insulative layer **468**, and an aperture insulative layer **470**. Each

insulative layer of the rotor hub **318** and the rotor connection member **320** can be formed of an electrically insulative material, such as a ceramic material. In FIG. **8**, the bolt **330** and associated nut **338** (see FIG. **6**) are removed for illustrative clarity.

Notably, due to the strategic arrangement of the insulative layers **460**, **462**, **464**, **466**, **468**, **470**, the rotor hub **318** and the rotor connection member **320** can electrically isolate the rotor connection member **320** and the rotor hub **318**, and thus, the rotor **312** is electrically isolated from the low speed shaft **246**. In this regard, the common mode current conductive path between the rotor **312** of the electric machine **300**A and the low speed shaft **246** can be interrupted by insulated joint **322**. Moreover, the bolt **330** and corresponding nut **338** (not pictured in FIG. **8**; see FIG. **6**) can but need not be coated with an insulative material. Further, in such embodiments, insulative members, such as the insulative shims of FIG. **6**, can but need not be arranged between components as shown in FIG. **6**.

Under the third prong for mitigating bearing electric currents, with reference again to FIG. **4**, at least one of the members connecting the rotor **312** of the electric machine **300**A and the low speed shaft **246** is electrically grounded by a grounding device **360**. For instance, as shown in FIG. **4**, the grounding device **360** is shown electrically grounding the rotor hub **318**, which as noted previously, is a member that connects the rotor **312** of the electric machine **300**A and the low speed shaft **246**. By electrically grounding the rotor hub **318**, the bearings **290** (FIG. **2**) supporting the low speed shaft **246** can be protected from common mode electric current surges or electrical overloads associated with the electric machine **310**A, among other benefits.

As depicted in FIG. **4**, the grounding device **360** can be electrically connected to the rotor hub **318** and a transmission cable **352** can electrically connect the grounding device **360** and a ground point, such as a grounding system **350** (shown schematically in FIG. **4**). The grounding system **350** can be any suitable grounding system, such as an aircraft grounding system. For instance, on an aircraft having a high electrically conductive fuselage, such as an aluminum fuselage, the grounding system **350** can be the fuselage itself. On an aircraft having a fuselage having an insulating or low electrically conductive fuselage, such as a carbon fiber fuselage, an internal metallic structure within the fuselage or other components of the aircraft, such as the wings, tail cone, or empennage of the aircraft, can be used for the grounding system **350**.

For this embodiment, the grounding device **360** includes a stationary component **362** connected to a structure of the engine **210**A, a rotating component **364** operatively coupled with and rotatable with the rotor hub **318**, and one or more electrical contacts **366** connected to one or both of the stationary component **362** and the rotating component **364**. The electrical contacts **366** can be grounding brushes formed of an electrically conductive material, such as metal or carbon. The electrical contacts **366** allow electric current to flow between the stationary component **362** and the rotating component **364** to facilitate grounding of the rotor hub **318**. The transmission cable **352** is electrically connected to the electrical contacts **366**, and thus, the electrical contacts **366** are electrically coupled with the grounding system **350**.

Notably, the grounding device **360** can be integrated into an existing component of the gas turbine engine **210**A. For instance, in some embodiments, the grounding device **360** is integrated into a resolver operable to measure degrees of rotation or angular position of the rotor hub **318** and the low speed shaft **246** operatively coupled thereto. Moreover, as the low speed shaft **246**, rotor hub **318**, and rotating component **364** rotate about the central longitudinal axis **214**, electrical contacts **366** connected to the stationary component **362** can contact the rotating component **364** coupled with the rotor hub **318** to provide an electrical grounding pathway. In this manner, the rotor hub **318** and low speed shaft **246** can be electrically grounded. The electrical contacts **366** can be grounding brushes, as noted above. In this regard, a grounding brush can be integrated into the resolver.

Accordingly, in such embodiments, the resolver has dual functionality in that it is operable to provide the grounding connection point for electrically grounding the rotor hub **318** and low speed shaft **246** and it measures degrees of rotation or angular position of the rotor hub **318** and the low speed shaft **246**. Integrating the electrical grounding functionality into a resolver can reduce the number of parts required for electrically grounding the rotor hub **318** and low speed shaft **246**, can reduce the weight of the first propulsor **200**A (FIG. **1**) and thus the weight of the aircraft **100** (FIG. **1**), and can be an efficient use of space.

In alternative example embodiments, the grounding device **360** can be integrated into other suitable components. For instance, in some embodiments, the grounding device **360** can be integrated into an encoder operable to measure a rotational speed of the rotor hub **318** and the low speed shaft **246** operatively coupled thereto. Moreover, as the low speed shaft **246**, rotor hub **318**, and rotating component **364** rotate about the central longitudinal axis **214**, electrical contacts **366** connected to the stationary component **362** of the encoder can contact the rotating component **364** of the encoder coupled with the rotor hub **318** to provide an electrical grounding pathway. In this manner, the rotor hub **318** and low speed shaft **246** can be electrically grounded. The electrical contacts **366** can be grounding brushes, as noted above. In this regard, a grounding brush can be integrated into the encoder.

Accordingly, in such embodiments, the encoder has dual functionality in that it is operable to provide the grounding connection point for electrically grounding the rotor hub **318** and low speed shaft **246** and it measures rotational speed of the rotor hub **318** and the low speed shaft **246**. Integrating the electrical grounding functionality into an encoder can reduce the number of parts required for electrically grounding the rotor hub **318** and low speed shaft **246**, can reduce the weight of the first propulsor **200**A (FIG. **1**) and thus the weight of the aircraft **100** (FIG. **1**), and can be an efficient use of space.

As further depicted in FIG. **4**, in some embodiments, the shaft electric current and/or shaft voltage can be measured by one or more sensors, represented by sensor **380**. The sensor **380** can be integrated into the grounding brush circuitry of the grounding device **360**, for example. The measured shaft electric current and/or shaft voltage can be provided to controller **182** and/or other computing or control devices, e.g., for facilitating control of the electric machine **300**A and/or the gas turbine engine **210**A.

Further, in some embodiments, the grounding device **360** can be integrated into an existing seal of the gas turbine engine **210**A. The grounding device **360** can be integrated into any suitable type of existing seal, such as a carbon seal, including end face and radial carbon seals, a finger seal, a brush seal, a labyrinth seal, etc. For instance, as an alternative to the grounding device **360** being integrated into the resolver or encoder depicted in FIG. **4**, the grounding device **360** can be integrated into a carbon seal **370** as depicted in FIG. **9**. The carbon seal **370** can be configured to seal a fluid (e.g., oil or air) within a chamber. The carbon seal **370** can

include a stationary component and a rotating component. For this embodiment, the stationary component is a stationary carbon element **372** connected to a stationary structure of the engine **210**A and the rotating component is a ring **374** rotatable with a rotating shaft, which is the low speed shaft **246** in this example embodiment. The ring **374** can be formed of an electrically conductive material, such as a metallic material. Likewise, the state of the carbon element **372** can be such that it is also electrically conductive. In some alternative embodiments, the grounding element, which in this example embodiment is carbon element **372**, can be formed of a material other than carbon. For instance, the grounding element can be formed of any suitable material that is electrically conductive and that has similar wear characteristics to carbon. The grounding element can be formed of a suitable composite, mixture, alloy, metal, or other material, for example.

Further, as depicted in FIG. **9**, the carbon element **372** and/or stationary structure to which the carbon element **372** is mounted can be electrically connected to a dedicated grounding system, such as grounding system **350**. Transmission line **352** can be electrically connected to the carbon element **372** or an adjacent structure electrically coupled with the carbon element **372**. In this manner, the grounding system **350** can be used to electrically ground the low speed shaft **246**. In yet other embodiments, the carbon element **372** and/or its adjacent structures can provide the grounding system.

Accordingly, as the low speed shaft **246**, rotor hub **318**, and ring **374** rotate about the central longitudinal axis **214**, an electrical grounding pathway is created between the ring **374** and the carbon element **372** (the electric current pathway may extend through fluid flowing therebetween). Thus, electric current may flow between the ring **374** and the carbon element **372**. In this manner, the low speed shaft **246** as well as the rotor hub **318** can be electrically grounded. Accordingly, in such embodiments, the carbon seal **370** has dual functionality in that it is operable to provide the grounding connection point for electrically grounding the low speed shaft **246** and the rotor hub **318** operatively coupled thereto and is operable to seal fluid within a chamber. Integrating the electrical grounding functionality into carbon seal **370** can reduce the number of parts required for electrically grounding the rotor hub **318** and low speed shaft **246**, can reduce the weight of the first propulsor **200**A (FIG. **1**) and thus the weight of the aircraft **100** (FIG. **1**), and can be an efficient use of space, among other benefits.

FIG. **10** provides a close-up, cross-sectional view of another example grounding device **360** integrated into a carbon seal **370** according to one example embodiment of the present disclosure. For this embodiment, carbon seal **370** is an end face carbon seal. As depicted, the carbon seal **370** includes a plurality of stationary components and a rotating component. Particularly, for this example embodiment, the stationary components include a first carbon element **480** and a second carbon element **482**. Both the first carbon element **480** and the second carbon element **482** can be formed of an electrically conductive carbon material. In some alternative embodiments, the grounding elements, which in this example embodiment is first carbon element **480** and second carbon element **482**, can be formed of a material other than carbon. For instance, the grounding elements can be formed of any suitable material that is electrically conductive and that has similar wear characteristics to carbon. The grounding elements can be formed of a suitable composite, mixture, alloy, metal, or other material, for example.

The second carbon element **482** is positioned outward of the first carbon element **480** along the radial direction R. The first carbon element **480** and the second carbon element **482** can be carbon rings, for example. The first carbon element **480** and the second carbon element **482** can be carried or held in position by a seal holder **484**, which is also a stationary component. The second carbon element **482** is positioned between two flanges of the seal holder **484** along the radial direction R while the first carbon element **480** is positioned inward of the two flanges of the seal holder **484** along the radial direction R.

The rotating component is a seal runner **486** that is coupled to and rotatable with the low speed shaft **246**. In some alternative embodiments, the seal runner **486** can be coupled with the rotor hub **318**. The seal runner **486** can be formed of an electrically conductive material, such as a metallic material. As illustrated, a spring **488** is positioned between the seal holder **484** and a seal housing **494**, e.g., along the axial direction A. The spring **488** applies a force on the seal holder **484**, which biases the first carbon element **480** and the second carbon element **482** in contact with the seal runner **486**. As shown in FIG. **10**, a face **490** of the first carbon element **480** engages the seal runner **486** and a face **492** of the second carbon element **482** engages the seal runner **486**. The face **492** of the second carbon element **482** engages the seal runner **486** with more surface area than which the face **490** of the first carbon element **480** engages the seal runner **486**.

Accordingly, as the low speed shaft **246** and seal runner **486** rotate about the central longitudinal axis **214** (FIG. **9**), a first electrical grounding pathway is created between the seal runner **486** and the first carbon element **480** and a second electrical grounding pathway is created between the seal runner **486** and the second carbon element **482**. Thus, electric current may flow between the seal runner **486** and the first and second carbon elements **480**, **482** along these pathways. The seal housing **494** may provide the grounding system in some embodiments, or alternatively, the seal housing **494** may be electrically connected to a dedicated grounding system **350** via transmission line **352**. In this manner, the low speed shaft **246**, as well as the rotor hub **318** (FIG. **9**), can be electrically grounded.

Thus, in such embodiments, the carbon seal **370** has dual functionality in that it is operable to provide grounding connection points for electrically grounding the low speed shaft **246** and the rotor hub **318** operatively coupled thereto and is operable to seal fluid within a chamber. The engagement of the first carbon element **480** with the seal runner **486** provides sealing functionality along with a first grounding pathway while the engagement of the second carbon element **482** provides a second grounding pathway and increases the number of electrical connection points with the seal runner **486**, which may provide improved electrical grounding of the low speed shaft **246**. Integrating the electrical grounding functionality into the carbon seal **370** of FIG. **10** can reduce the number of parts required for electrically grounding the rotor hub **318** and low speed shaft **246**, can reduce the weight of the first propulsor **200**A (FIG. **1**) and thus the weight of the aircraft **100** (FIG. **1**), and can be an efficient use of space, among other benefits.

FIG. **11** provides a close-up, cross-sectional view of a grounding device **360** integrated into a carbon seal **370** according to another example embodiment of the present disclosure. For this embodiment, carbon seal **370** is a radial carbon seal. As depicted, the carbon seal **370** includes a carbon element **500** that has a face **502** that directly engages the low speed shaft **246**. In alternative embodiments, the

face **502** can engage the rotor hub **318** of the rotor connection assembly **316** (FIG. **9**). The carbon element **500** can be formed of an electrically conductive carbon material. The carbon element **500** is carried or held by a seal holder **504**, which may be mechanically coupled with various support structures. A spring **506** is positioned between the seal holder **504** and the carbon element **500**. The spring **506** biases the carbon element **500** into the desired axial position.

As the low speed shaft **246** rotates about the central longitudinal axis **214** (FIG. **9**), an electrical grounding pathway is created between the low speed shaft **246** and the carbon element **500**. Thus, electric current may flow between the low speed shaft **246** and the carbon element **500**. The seal holder **504** may provide the grounding system in some embodiments, or alternatively as shown in FIG. **11**, the seal holder **504** may be electrically connected to a dedicated grounding system **350** via transmission line **352**. In this manner, the low speed shaft **246**, as well as the rotor hub **318** (FIG. **9**), can be electrically grounded. Integrating the electrical grounding functionality into the carbon seal **370** of FIG. **11** can reduce the number of parts required for electrically grounding the rotor hub **318** and low speed shaft **246**, can reduce the weight of the first propulsor **200**A (FIG. **1**) and thus the weight of the aircraft **100** (FIG. **1**), and can be an efficient use of space, among other benefits.

FIG. **12** provides a close-up, cross-sectional view of a grounding device **360** integrated into a finger seal **510** according to an example embodiment of the present disclosure. As depicted, the finger seal **510** includes a stack or plurality of finger elements **512**. The plurality of finger elements **512** are positioned between a first plate **514** and a second plate **516**, e.g., along the axial direction A. The finger elements **512** and the first plate **514** and second plate **516** can be clamped or secured together in any suitable manner, e.g., by one or more mechanical fasteners. The plates **514**, **516** can be formed of an electrically conductive material, such as a metallic material. The finger elements **512** extend along the radial direction R so as to contact the low speed shaft **246**. In alternative embodiments, the finger elements **512** can extend to contact other rotating elements coupled with the low speed shaft **246**, such as the rotor hub **318** (FIG. **9**). The finger elements **512** can be formed of a flexible material. In this manner, the finger elements **512** can accommodate displacement and/or deformation of the low speed shaft **246** whilst maintaining contact thereto. Moreover, the flexible material used for the finger elements **512** can also be an electrically conductive material.

In this regard, as the low speed shaft **246** rotates about the central longitudinal axis **214** (FIG. **9**), an electrical grounding pathway is created between the low speed shaft **246** and the finger elements **512** of the finger seal **510**. Thus, electric current may flow between the low speed shaft **246** and the finger elements **512**. The plates **514**, **516** may provide the grounding system in some embodiments, or alternatively, the plates **514**, **516** may be electrically connected to a dedicated grounding system **350** via transmission line **352** as shown in FIG. **12**. In this manner, the low speed shaft **246**, as well as the rotor hub **318** (FIG. **9**), can be electrically grounded. Integrating the electrical grounding functionality into the finger seal **510** of FIG. **12** can reduce the number of parts required for electrically grounding the rotor hub **318** and low speed shaft **246**, can reduce the weight of the first propulsor **200**A (FIG. **1**) and thus the weight of the aircraft **100** (FIG. **1**), and can be an efficient use of space, among other benefits.

In yet other embodiments, as noted above, the grounding device **360** can be integrated into a brush seal, such as brush seal **520** depicted in FIG. **13**. The brush seal **520** can be configured to seal a fluid (e.g., oil or air) within a chamber. As shown in FIG. **13**, the brush seal **520** includes a housing **522** spaced from the low speed shaft **246**, e.g., along the radial direction R. The brush seal **520** also includes one or more brushes. For this embodiment, the brush seal **520** includes a plurality of brushes **524**. Each brush **524** includes a plurality of filaments. The filaments can be formed of an electrically conductive material, such as a metallic material. Walls **526** can be positioned between adjacent brushes **524**, e.g., along the axial direction A. Further, each brush **524** extends between a proximal end **528** and a distal end **530**, e.g., along the radial direction R. The brushes **524** are attached to the housing **522** at their respective proximal ends **528**. The brushes **524** are engaged with the low speed shaft **246** at their respective distal ends **530**. Notably, the low speed shaft **246** can include a wear resistant coating **249** along its outer circumference as shown in FIG. **13**. The wear resistant coating **249** can prevent damage to the low speed shaft **246** due to engagement of the brushes **524** therewith. In some embodiments, the brushes **524** can be electrically connected to the grounding system **350** via the transmission line **352**.

Accordingly, as the low speed shaft **246** and rotor hub **318** rotate about the central longitudinal axis **214** (FIG. **2**) and the brushes **524** engage the low speed shaft **246**, an electrical grounding pathway is created between the brushes **524** and the low speed shaft **246**. Thus, electric current may flow between the low speed shaft **246** and the brushes **524**. In this manner, the low speed shaft **246** as well as the rotor hub **318** can be electrically grounded. Accordingly, in such embodiments, the brush seal **520** has dual functionality in that it is operable to provide the grounding connection point for electrically grounding the low speed shaft **246** and the rotor hub **318** operatively coupled thereto and is operable to seal fluid within a chamber. Integrating the electrical grounding functionality into brush seal **520** can reduce the number of parts required for electrically grounding the rotor hub **318** and low speed shaft **246**, can reduce the weight of the first propulsor **200**A (FIG. **1**) and thus the weight of the aircraft **100** (FIG. **1**), and can be an efficient use of space, among other benefits.

FIG. **14** provides a flow diagram for a method (**600**) of operating a hybrid-electric propulsor according to one example embodiment of the present disclosure. For instance, method (**600**) can be used to operate one or both of the propulsors **200**A, **200**B disclosed herein or any other propulsor having a gas turbine engine equipped with an embedded electric machine operatively coupled with a shaft of the engine. It will be appreciated that method (**600**) is discussed herein to describe exemplary aspects of the present subject matter and is not intended to be limiting.

At (**602**), the method (**600**) includes operating a propulsor having a gas turbine engine equipped with an electric machine operatively coupled with a shaft of the gas turbine engine, the electric machine being electrically coupled with a power converter. For instance, the propulsor can be the first propulsor **200**A disclosed herein. The electric machine can be embedded within the core of the gas turbine engine can be mechanically coupled with a shaft, such as a low speed shaft, a high-speed shaft, or any other suitable shaft of the gas turbine engine. One or more bearings may support the shaft. During operation, the shaft is rotated about its axis of rotation, and as the rotor of the electric machine is operatively coupled with the shaft, the rotor rotates in unison with the shaft. In some implementations, the electric machine may operate in a drive or motor mode. In the drive mode, the

power converter provides electrical power to the electric machine, which causes the electric machine to drive the shaft. In some implementations, the electric machine may operate in a generator mode. In the generator mode, the shaft drives the rotor, causing the electric machine to generate electrical power. The generated electrical power can then be provided to the power converter and ultimately to one or more electrical loads. As electric power is transmitted between the power converter and the electric machine, common mode voltage can drive common mode electric currents through the electric machine and through electrically conductive components associated with the electric machine.

At (**602**A), in some implementations, in operating the propulsor at (**602**), the method (**600**) includes reducing, via an electromagnetic interface filter of the power converter, a common mode voltage reaching the electric machine from the power converter. For instance, an EMI filter of the power converter associated with the propulsor can reduce the common mode voltage reaching the electric machine. In addition, in some implementations, one or more shielded cables or bus bars can further reduce the common mode voltage reaching the electric machine.

At (**602**B), in some implementations, in operating the propulsor at (**602**), the method (**600**) includes interrupting, via an insulated joint of a rotor connection assembly operatively coupling a rotor of the electric machine with the shaft, a common mode electric current driven by the power converter to the electric machine from flowing from the rotor to the shaft. For instance, the insulated joint can be embodied in any of the configurations provided herein. As one example, the insulated joint can mechanically couple a rotor connection member connected to a rotor of the electric machine and a rotor hub connected to the shaft. The insulated joint cannot only mechanically couple the rotor connection member and the rotor hub, but it may also electrically isolate the rotor and the shaft. In this regard, the insulated joint interrupts common mode electric current from flowing from the rotor to the shaft. Advantageously, this prevents common mode electric currents from reaching the one or more bearings supporting the shaft.

At (**602**C), in some implementations, in operating the propulsor at (**602**), the method (**600**) includes electrically grounding, by a grounding device, the shaft. For instance, the grounding device can be embodied in any of the configurations provided herein. As one example, the grounding device can be configured as shown in FIG. **4**. Particularly, the grounding device can have a stationary component, a rotating component connected to the shaft or some other component rotatable with the shaft, and one or more electrical contacts providing an electrical grounding pathway between the rotating component and the stationary component. In some implementations, the grounding device is integrated into a resolver operable to measure an angle of the shaft. In yet other implementations, the grounding device is integrated into an encoder operable to measure a rotational speed of the shaft. In some further implementations, the grounding device is integrated into a carbon seal. In some further implementations, the grounding device is integrated into a brush seal.

Accordingly, during operation of the propulsor at (**602**), the method (**600**) can include, in combination, reducing the common mode voltage reaching the electric machine at (**602**A), interrupting common mode electric current from reaching the shaft to which the electric machine is coupled at (**602**B), and electrically grounding the shaft to which the electric machine is coupled at (**602**C). In this way, a three-prong solution to bearing electric current mitigation is achieved. Advantageously, this may enable achieving a specific fuel burn gain through the circulation of electric power between low speed and high speed spools without shortening the life of the spool bearings. Moreover, this may enable mitigating the spool bearing currents without modification of such bearings and with only minimal modification to the spool rotor structure.

FIG. **15** provides an example computing system **700** according to example embodiments of the present disclosure. The computing systems and devices described herein may include various components and perform various functions of the computing system **700** described below, for example.

As shown in FIG. **15**, the computing system **700** can include one or more computing device(s) **710**. The computing device(s) **710** can include one or more processor(s) **710**A and one or more memory device(s) **710**B. The one or more processor(s) **710**A can include any suitable processing device, such as a microprocessor, microcontroller, integrated circuit, logic device, and/or other suitable processing device. The one or more memory device(s) **710**B can include one or more computer-readable media, including, but not limited to, non-transitory computer-readable media, RAM, ROM, hard drives, flash drives, and/or other memory devices.

The one or more memory device(s) **710**B can store information accessible by the one or more processor(s) **710**A, including computer-readable instructions **710**C that can be executed by the one or more processor(s) **710**A. The instructions **710**C can be any set of instructions that when executed by the one or more processor(s) **710**A, cause the one or more processor(s) **710**A to perform operations. In some embodiments, the instructions **710**C can be executed by the one or more processor(s) **710**A to cause the one or more processor(s) **710**A to perform operations, such as any of the operations and functions for which the computing system **700** and/or the computing device(s) **710** are configured. The instructions **710**C can be software written in any suitable programming language or can be implemented in hardware. Additionally, and/or alternatively, the instructions **710**C can be executed in logically and/or virtually separate threads on processor(s) **710**A. The memory device(s) **710**B can further store data **710**D that can be accessed by the processor(s) **710**A. For example, the data **710**D can include models, databases, etc.

The computing device(s) **710** can also include a network interface **710**E used to communicate, for example, with the other components of system **700** (e.g., via a communication network). The network interface **710**E can include any suitable components for interfacing with one or more network(s), including for example, transmitters, receivers, ports, controllers, antennas, and/or other suitable components. One or more devices can be configured to receive one or more commands from the computing device(s) **710** or provide one or more commands to the computing device(s) **710**.

The technology discussed herein makes reference to computer-based systems and actions taken by and information sent to and from computer-based systems. One of ordinary skill in the art will recognize that the inherent flexibility of computer-based systems allows for a great variety of possible configurations, combinations, and divisions of tasks and functionality between and among components. For instance, processes discussed herein can be implemented using a single computing device or multiple computing devices working in combination. Databases, memory, instructions, and applications can be implemented on a

single system or distributed across multiple systems. Distributed components can operate sequentially or in parallel.

Although specific features of various embodiments may be shown in some drawings and not in others, this is for convenience only. In accordance with the principles of the present disclosure, any feature of a drawing may be referenced and/or claimed in combination with any feature of any other drawing.

This written description uses examples to disclose the invention, including the best mode, and also to enable any person skilled in the art to practice the invention, including making and using any devices or systems and performing any incorporated methods. The patentable scope of the invention is defined by the claims, and may include other examples that occur to those skilled in the art. Such other examples are intended to be within the scope of the claims if they include structural elements that do not differ from the literal language of the claims, or if they include equivalent structural elements with insubstantial differences from the literal languages of the claims.

Further aspects of the invention are provided by the subject matter of the following clauses:

1. A hybrid-electric propulsion system, comprising: a power converter; and a propulsor, comprising: a gas turbine engine having a shaft and one or more bearings supporting the shaft; and an electric machine electrically coupled with the power converter and including a stator assembly and a rotor assembly, the rotor assembly having a rotor and a rotor connection assembly, the rotor connection assembly operatively coupling the rotor with the shaft, the rotor connection assembly having an insulated joint for interrupting common mode electric current from flowing between the rotor and the shaft.
2. The hybrid-electric propulsion system of any preceding clause, wherein the rotor connection assembly has a rotor hub and a rotor connection member, the rotor hub being connected to the shaft and the rotor connection member being connected to the rotor, the rotor hub and the rotor connection member being mechanically coupled with one another by the insulated joint.
3. The hybrid-electric propulsion system of any preceding clause, wherein the insulated joint comprises a hub flange of the rotor hub, a connection flange of the rotor connection member, a bolt extending through the hub flange and the connection flange, and one or more insulative members electrically isolating the rotor connection member from the rotor hub.
4. The hybrid-electric propulsion system of any preceding clause, wherein the one or more insulative members include a hub shim positioned between the hub flange and one of a head of the bolt and a nut secured to the bolt opposite the head, an interface shim positioned between the hub flange and the connection flange so that the hub flange and the connection flange are not in physical contact with one another, and a connection flange positioned between the hub flange and one of the head of the bolt and the nut secured to the bolt opposite the head.
5. The hybrid-electric propulsion system of any preceding clause, wherein at least a portion of the bolt is coated with an insulative coating, the portion being in physical contact with at least one of the hub flange and the connection flange.
6. The hybrid-electric propulsion system of any preceding clause, wherein the power converter has an electromagnetic interference filter operable to reduce a common mode voltage reaching the electric machine from the power converter.
7. The hybrid-electric propulsion system of any preceding clause, wherein the power converter is electrically coupled with the electric machine by one or more shielded cables.
8. The hybrid-electric propulsion system of any preceding clause, wherein the gas turbine engine further comprises a grounding device having a stationary component, a rotating component connected to the shaft, and one or more electrical contacts providing an electrical grounding pathway between the rotating component and the stationary component, the stationary component being electrically coupled with a grounding system.
9. The hybrid-electric propulsion system of any preceding clause, wherein the grounding device is integrated into a resolver operable to measure an angle of the shaft or an encoder operable to measure a rotational speed of the shaft.
10. The hybrid-electric propulsion system of any preceding clause, wherein the grounding device is integrated into a carbon seal or a brush seal.
11. The hybrid-electric propulsion system of any preceding clause, wherein the propulsor defines a radial direction, and wherein the rotor is positioned inward of a stator of the stator assembly along the radial direction.
12. The hybrid-electric propulsion system of any preceding clause, wherein the propulsor defines a radial direction, and wherein the rotor is positioned outward of a stator of the stator assembly along the radial direction.
13. The hybrid-electric propulsion system of any preceding clause, wherein the gas turbine engine includes a low speed shaft and a high speed shaft, and wherein the shaft is the low speed shaft.
14. The hybrid-electric propulsion system of any preceding clause, wherein the gas turbine engine includes a low speed shaft and a high speed shaft, and wherein the shaft is the high speed shaft.
15. A method, comprising: operating a propulsor having a gas turbine engine equipped with an electric machine operatively coupled with a shaft of the gas turbine engine, the electric machine being electrically coupled with a power converter, and wherein operating the propulsor comprises: i) reducing, via an electromagnetic interface filter of the power converter, a common mode voltage reaching the electric machine from the power converter; ii) interrupting, via an insulated joint of a rotor connection assembly operatively coupling a rotor of the electric machine with the shaft, a common mode electric current driven by the power converter to the electric machine from flowing between the rotor and the shaft; and iii) electrically grounding, by a grounding device, the shaft.
16. A propulsor, comprising: a gas turbine engine having a shaft; and an electric machine having a stator assembly and a rotor assembly, the rotor assembly having a rotor and a rotor connection assembly, the rotor connection assembly having a rotor connection member connected to the rotor and a rotor hub connected to the shaft, the rotor connection member and the rotor being mechanically coupled with and electrically isolated by an insulated joint; and a grounding device operable to electrically ground the shaft.

17. The propulsor of any preceding clause, wherein the grounding device has a stationary component, a rotating component connected to the shaft, and one or more electrical contacts providing an electrical grounding pathway between the rotating component and the stationary component.

18. The propulsor of any preceding clause, wherein the grounding device is integrated into a resolver operable to measure an angle of the shaft or an encoder operable to measure a rotational speed of the shaft.

19. The propulsor of any preceding clause, wherein the grounding device is integrated into at least one of a carbon seal and a brush seal.

20. The propulsor of any preceding clause, wherein the wherein the rotor connection assembly has a rotor hub and a rotor connection member, the rotor hub being connected to the shaft and the rotor connection member being connected to the rotor, the rotor hub and the rotor connection member being mechanically coupled with one another by the insulated joint, and wherein the insulated joint comprises a hub flange of the rotor hub, a connection flange of the rotor connection member, a bolt extending through the hub flange and the connection flange, and wherein at least one of the hub flange and the connection flange have one or more insulative layers.

What is claimed is:

1. A propulsor, comprising:

a gas turbine engine having a shaft and one or more bearings supporting the shaft;

a rotor hub operatively coupled to the shaft and comprising a hub flange;

an electric machine comprising a stator assembly and a rotor assembly;

a rotor connection member operatively coupled to the rotor assembly of the electric machine and comprising a connection flange; and

an insulated joint for operatively coupling the rotor assembly with the shaft, the insulating joint comprising:

a plurality of insulative layers, at least one of the plurality of insulative layers extending between the hub flange and the connection flange to interrupt common mode electric current from flowing between the rotor assembly and the shaft, wherein the plurality of insulative layers comprise hub-side insulative layers, wherein the hub-side insulative layers comprise an outer layer and an inner layer spaced apart along an axial direction.

2. The propulsor of claim **1**, wherein the outer layer forms an outer surface of the hub flange.

3. The propulsor of claim **1**, wherein the plurality of insulative layers comprise interface-side insulative layers, wherein the interface-side insulative layers comprise an outer layer and an inner layer spaced apart along an axial direction.

4. The propulsor of claim **3**, wherein the outer layer forms an interface between the hub flange and the connection flange.

5. The propulsor of claim **3**, wherein the outer layer and the inner layer extend at least partially along the axial direction between an outer member of the hub flange and the connection flange.

6. The propulsor of claim **3**, wherein the interface-side insulative layers form part of the hub flange or the connection flange.

7. The propulsor of claim **1**, wherein the plurality of insulative layers comprise aperture-side insulative layers, wherein the aperture-side insulative layers comprise an outer layer and an inner layer spaced apart along a radial direction.

8. The propulsor of claim **7**, wherein the outer layer extends circumferentially around an aperture defined by at least one of the hub flange or the connection flange.

9. The propulsor of claim **1**, a bolt extending through the hub flange and the connection flange, wherein at least one of the plurality of insulative layers extends between the bolt and the hub flange and at least one of the plurality of insulative layers extends between the bolt and the connection flange.

10. The propulsor of claim **9**, wherein at least a portion of the bolt is coated with an insulative coating, the portion being in physical contact with at least one of the hub flange or the connection flange.

11. The propulsor of claim **9**, wherein the insulated joint further comprises:

a hub shim positioned between the hub flange and one of a head of the bolt and a nut secured to the bolt opposite the head, an interface shim positioned between the hub flange and the connection flange so that the hub flange and the connection flange are not in physical contact with one another, and a connection shim positioned between the hub flange and one of the head of the bolt and the nut secured to the bolt opposite the head.

12. The propulsor of claim **1**, wherein at least one of the plurality of insulative layers comprises at least two layers and wherein a metallic layer is positioned at least partially between the at least two layers.

13. The propulsor of claim **1**, wherein the plurality of insulative layers are formed from ceramic.

14. The propulsor of claim **1**, wherein the electric machine is electrically coupled with a power converter.

15. The propulsor of claim **1**, wherein the gas turbine engine further comprises a grounding device having a stationary component, a rotating component connected to the shaft, and one or more electrical contacts providing an electrical grounding pathway between the rotating component and the stationary component, the stationary component being electrically coupled with a grounding system.

16. The propulsor of claim **15**, wherein the grounding device is integrated into a brush seal, the brush seal comprising a plurality of brushes separated by walls that extend along a radial direction.

17. The propulsor of claim **16**, wherein the shaft comprises a wear resistant coating and a distal end of each of the plurality of brushes contact the wear resistant coating.

18. The propulsor of claim **1**, wherein the gas turbine engine includes a low speed shaft and a high speed shaft, and wherein the shaft is the low speed shaft.

19. A method, comprising:

operating a propulsor having a gas turbine engine equipped with an electric machine operatively coupled with a shaft of the gas turbine engine, the electric machine being electrically coupled with a power converter, and a rotor hub comprising a hub flange and being operatively coupled to the shaft; and

wherein operating the propulsor comprises:

i) interrupting, via an insulated joint that operatively couples a rotor assembly of the electric machine with the shaft, a common mode electric current driven by the power converter to the electric machine from flowing between the rotor assembly and the shaft, the insulated joint comprising a plurality of insulative layers, at least one of the plurality of insulative layers extending

between the hub flange and a connection flange of the rotor assembly, wherein the plurality of insulative layers comprise hub-side insulative layers, wherein the hub-side insulative layers comprise an outer layer and an inner layer spaced apart along an axial direction; and

ii) electrically grounding, by a grounding device, the shaft.

20. A propulsor, comprising:

a gas turbine engine having a shaft and one or more bearings supporting the shaft;

a rotor hub operatively coupled to the shaft and comprising a hub flange;

an electric machine comprising a stator assembly and a rotor assembly;

a rotor connection member operatively coupled to the rotor assembly of the electric machine and comprising a connection flange; and

an insulated joint for operatively coupling the rotor assembly with the shaft, the insulating joint comprising:

a plurality of insulative layers, at least one of the plurality of insulative layers extending between the hub flange and the connection flange to interrupt common mode electric current from flowing between the rotor assembly and the shaft, wherein the plurality of insulative layers comprise interface-side insulative layers, wherein the interface-side insulative layers comprise an outer layer and an inner layer spaced apart along an axial direction.

* * * * *