US012418059B2

(12) **United States Patent**
Carr

(10) **Patent No.: US 12,418,059 B2**
(45) **Date of Patent: Sep. 16, 2025**

(54) **SYSTEMS AND METHODS FOR BATTERY CELL RECYCLING**

(71) Applicant: **GM GLOBAL TECHNOLOGY OPERATIONS LLC**, Detroit, MI (US)

(72) Inventor: **Alex Carr**, Royal Oak, MI (US)

(73) Assignee: **GM GLOBAL TECHNOLOGY OPERATIONS LLC**, Detroit, MI (US)

(*) Notice: Subject to any disclaimer, the term of this patent is extended or adjusted under 35 U.S.C. 154(b) by 530 days.

(21) Appl. No.: **17/933,154**

(22) Filed: **Sep. 19, 2022**

(65) **Prior Publication Data**

US 2024/0097223 A1 Mar. 21, 2024

(51) **Int. Cl.**
H01M 10/54 (2006.01)

(52) **U.S. Cl.**
CPC ***H01M 10/54*** (2013.01)

(58) **Field of Classification Search**
CPC H10M 10/54; Y02E 60/10; B02C 9/18; B02C 23/10; B02C 21/00
See application file for complete search history.

(56) **References Cited**

U.S. PATENT DOCUMENTS

5,437,236 A * 8/1995 Zeiner A47B 9/10 312/231
6,439,218 B1 * 8/2002 Hulett B27B 27/10 125/11.22
2019/0027794 A1 * 1/2019 Fung B02C 23/10

FOREIGN PATENT DOCUMENTS

CN 1460054 A * 12/2003 ..... B23D 45/06
EP 2512931 B1 * 4/2019 ..... B31B 50/726

OTHER PUBLICATIONS

Osterhout et al., Systems and Methods for Creating a Manufacturer's Joint and Closing a Box, Apr. 2019, See the Abstract. (Year: 2019).*
Amonette et al., Safety System of Power Driving Device, Dec. 2003, See the Abstract. (Year: 2003).*

* cited by examiner

Primary Examiner — Niki Bakhtiari
Assistant Examiner — Monique M Wills
(74) *Attorney, Agent, or Firm* — Ingrassia Fisher & Lorenz, LLP | IF&L

(57) **ABSTRACT**

A battery cell recycling system includes a recycling table having a first table surface opposite a second table surface and at least one collection slot defined through the first table surface and the second table surface. The battery cell recycling system includes a battery guide system to receive a battery cell including a first lead tab, a second lead tab and a pouch. The battery guide system is movable between a first position and a second position in which at least one of the first lead tab, the second lead tab and the pouch is disposed over the collection slot. The battery cell recycling system includes at least one actuator configured to move at least one cutting blade to remove at least one of the first lead tab, the second lead tab and the pouch from the battery cell in the second position.

20 Claims, 16 Drawing Sheets

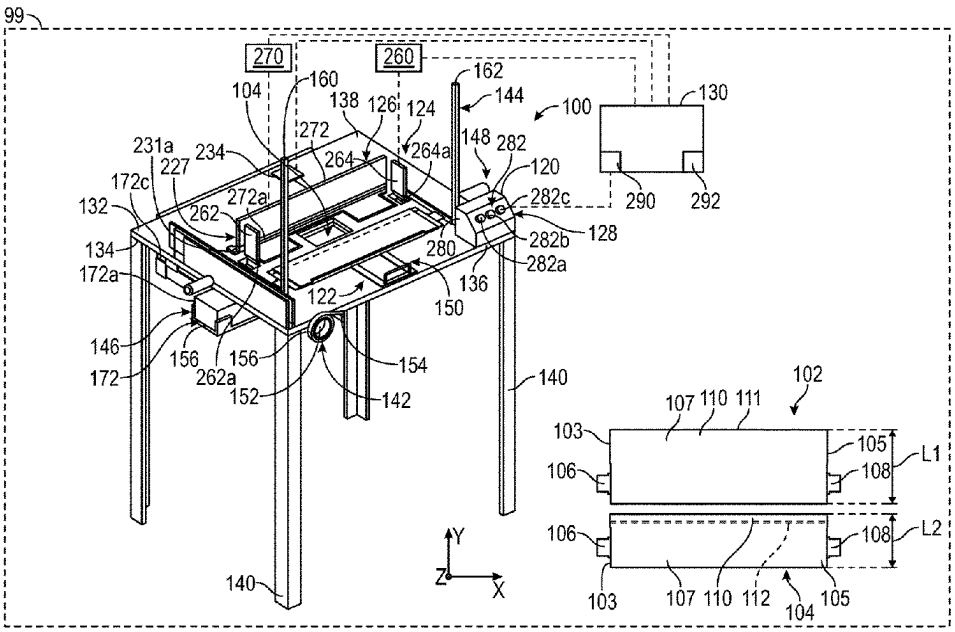

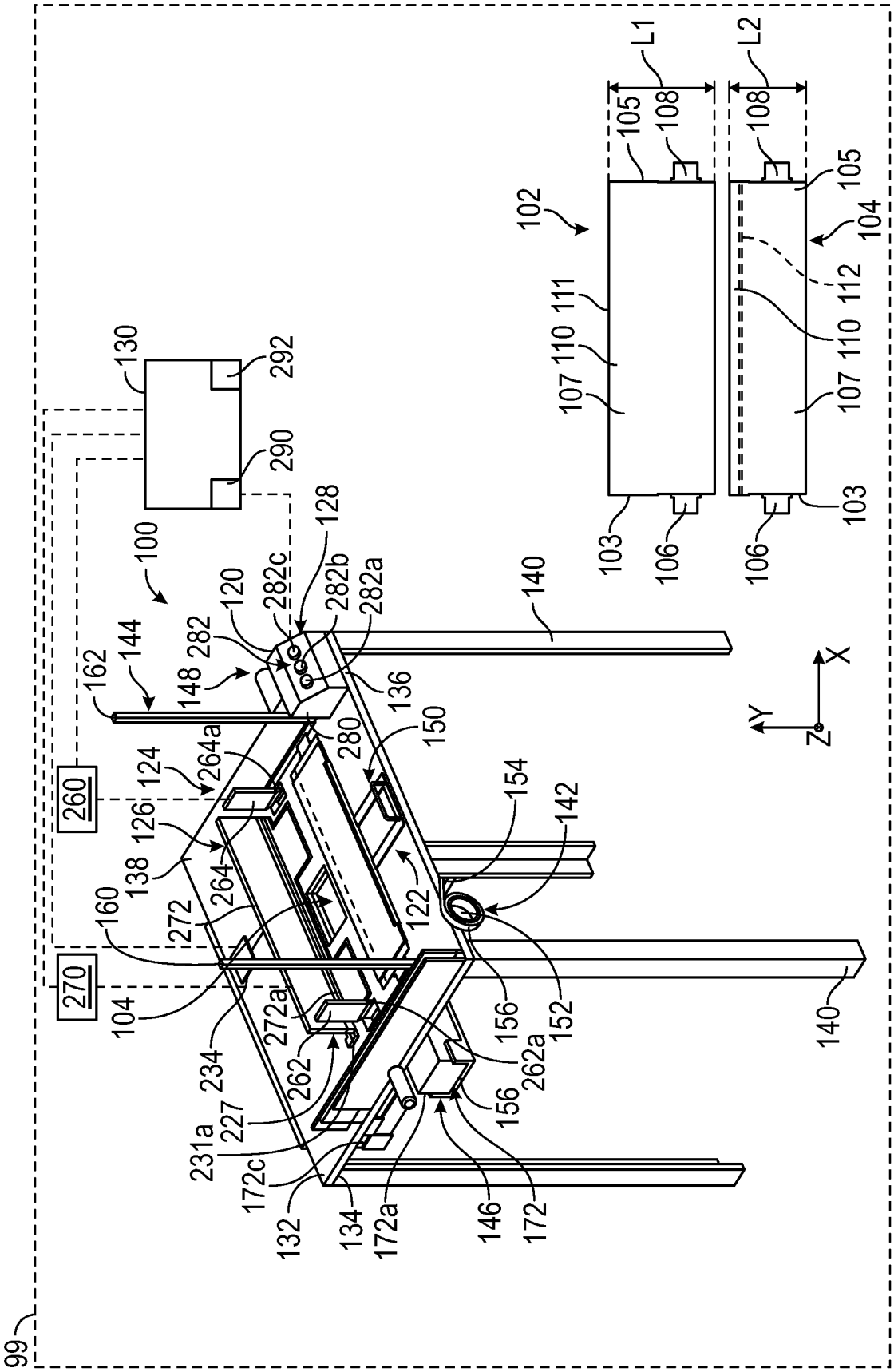
99
100
102
103
104
105
106
107
108
110
111
112
120
122
124
126
128
130
132
134
136
138
140
142
144
146
148
150
152
154
156
160
162
172
172a
172c
227
231a
234
260
262
262a
264
264a
270
272
272a
280
282
282a
282b
282c
290
292
L1
L2
X
Y
Z

FIG. 1

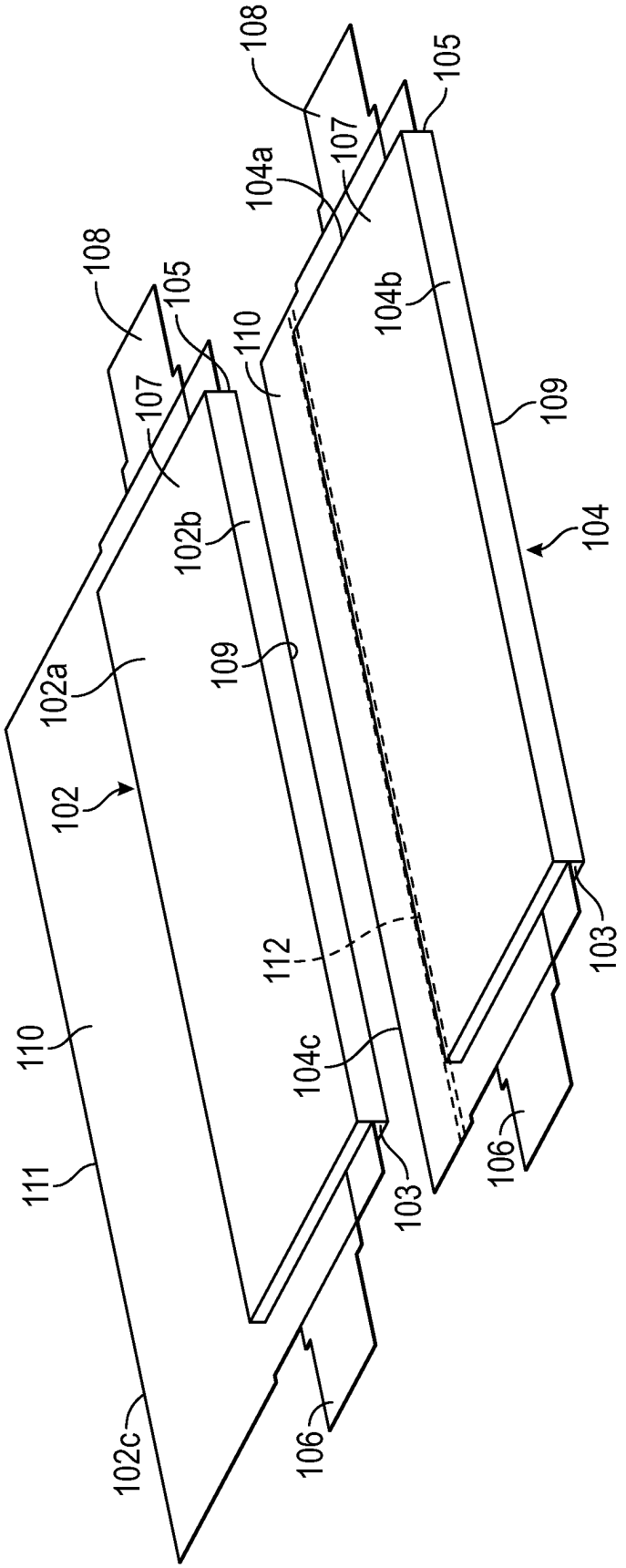
108
105
107
104a
108
105
110
104b
107
109
102b
104
102a
109
102
112
103
110
104c
111
103
106
102c
106

FIG. 1A

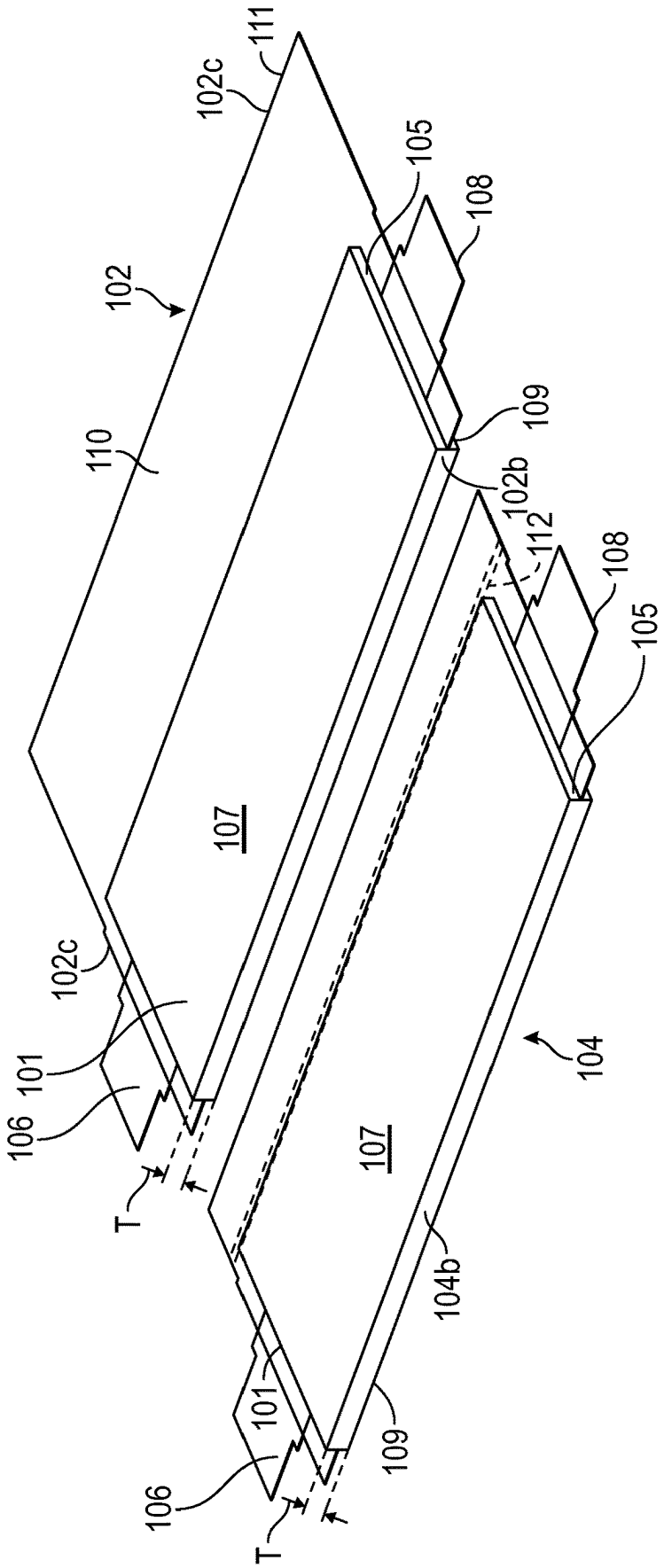
111
102c
102
110
105
108
109
102b
112
108
105
107
102c
101
106
T
107
104
104b
101
106
T
109

FIG. 1B

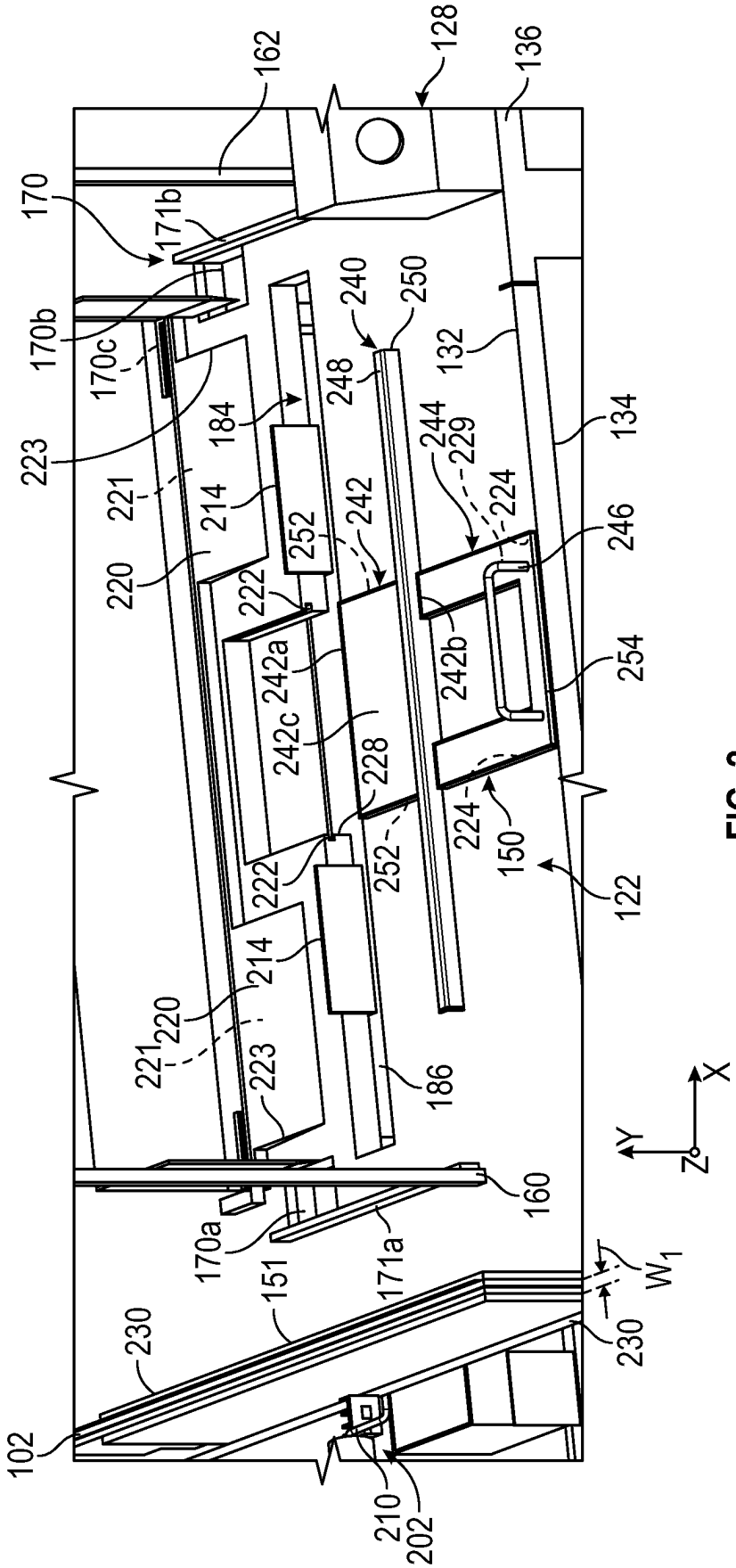
100
162
128
136
170
171b
170b
170c
223
221
220
214
184
240
250
248
132
134
244
229
224
246
252
242
222
242a
242c
242b
254
228
224
150
122
252
222
214
220
221
223
186
160
170a
171a
151
230
102
210
202
230
W_1
X
Y
Z

FIG. 2

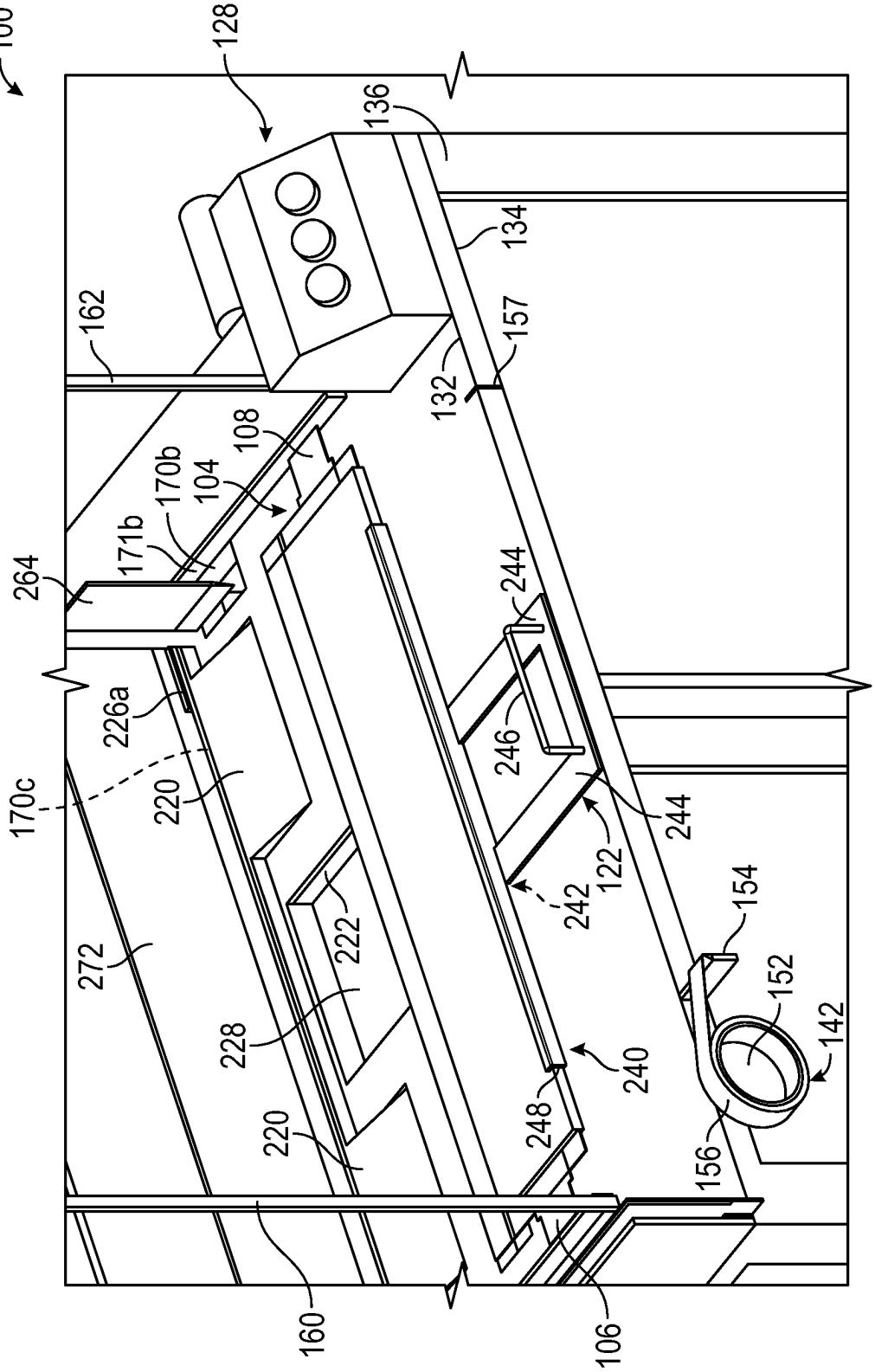
100
128
136
134
162
157
132
108
170b
104
171b
264
244
226a
246
170c
220
244
122
242
154
272
222
152
228
142
240
248
220
156
160
106

FIG. 2A

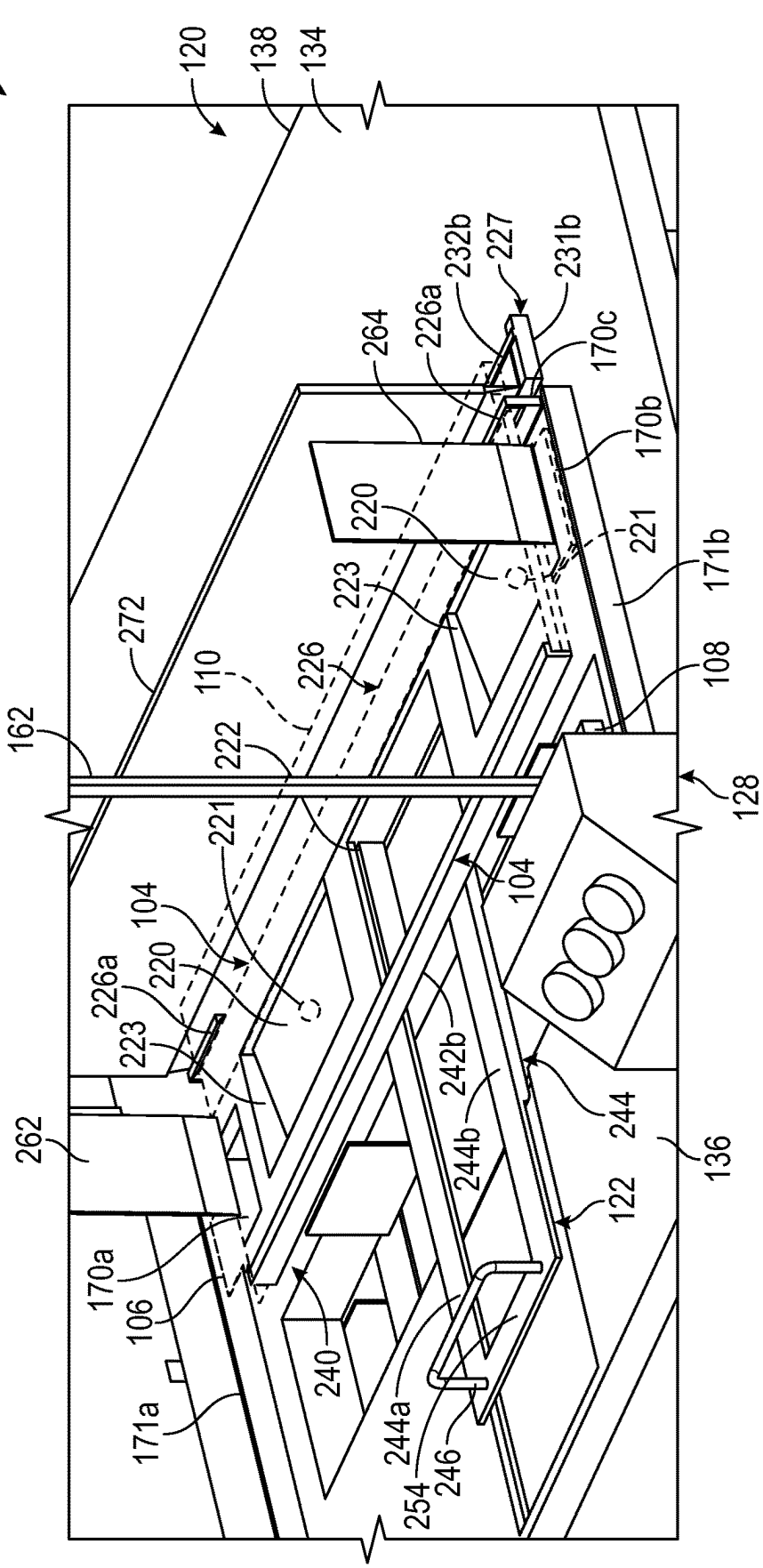
100
120
138
134
232b
227
231b
226a
264
170c
170b
220
221
171b
223
272
110
226
108
162
222
128
221
104
104
220
226a
223
242b
244
262
244b
136
122
170a
106
240
171a
244a
246
254

FIG. 2B

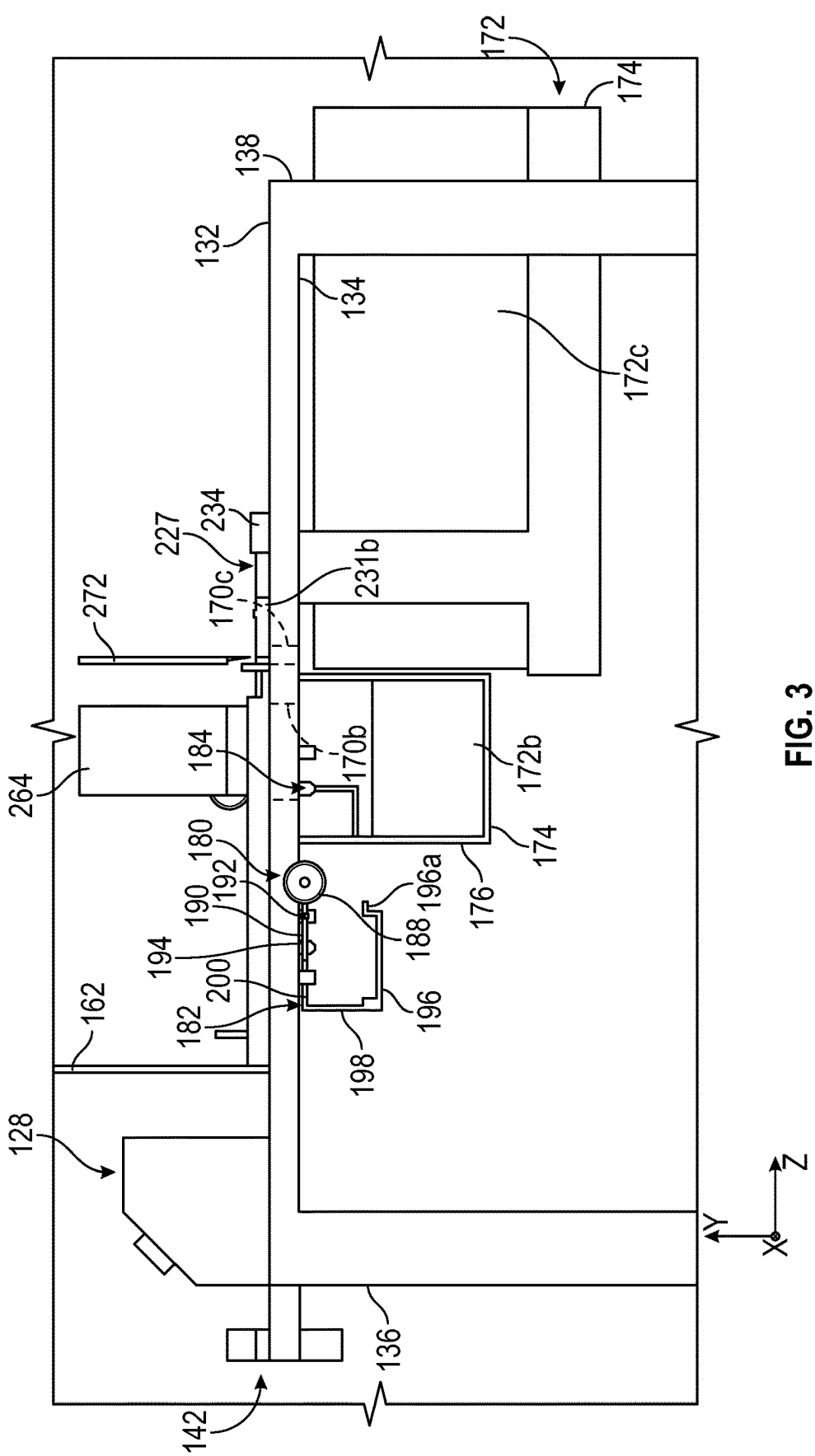
100
172
174
138
132
134
172c
227
234
170c
231b
272
264
184
170b
172b
174
176
180
192
190
196a
188
194
200
196
182
162
198
128
136
142
Y
Z
X

FIG. 3

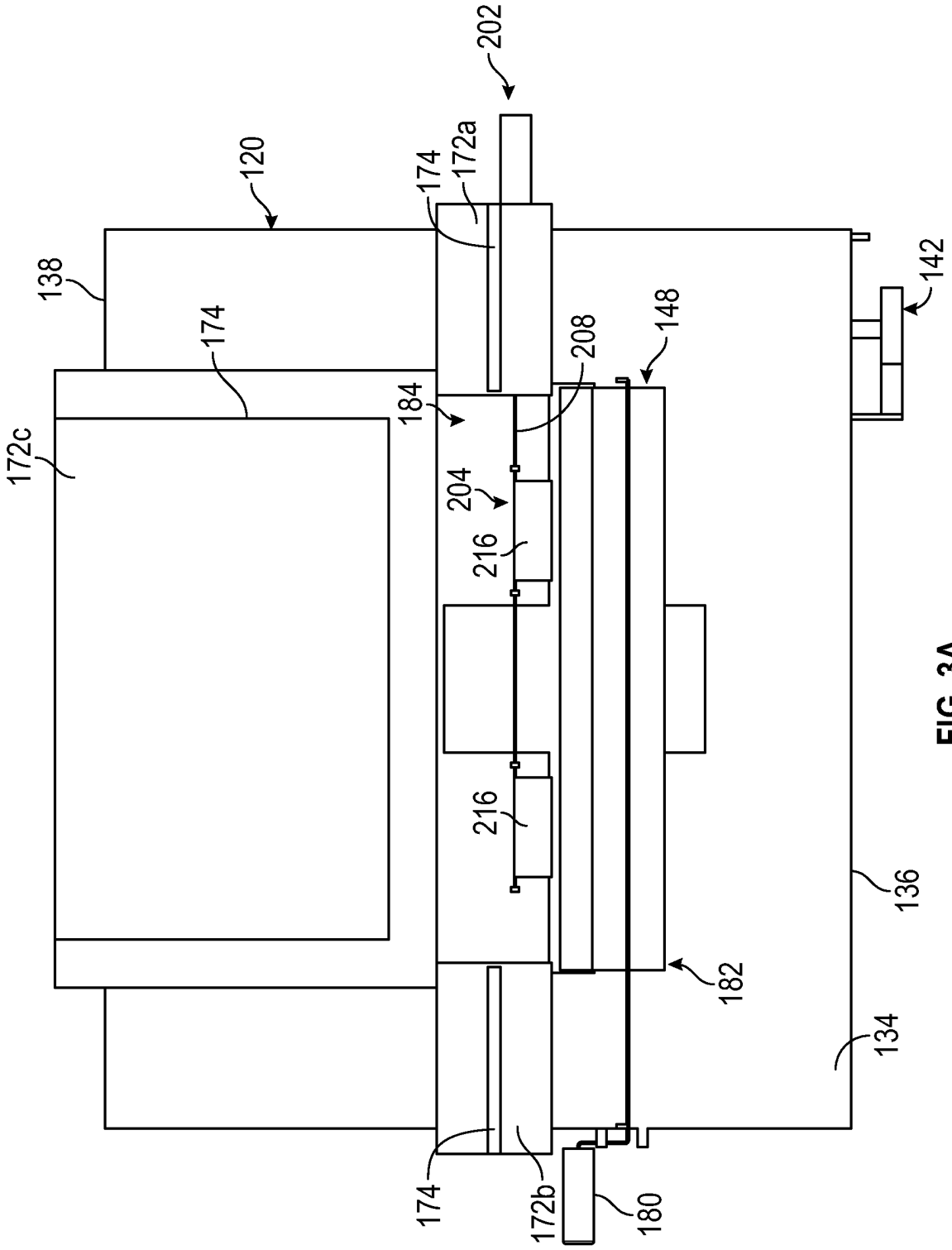
202
120
174
172a
138
174
172c
184
208
148
142
204
216
216
136
182
134
174
172b
180

FIG. 3A

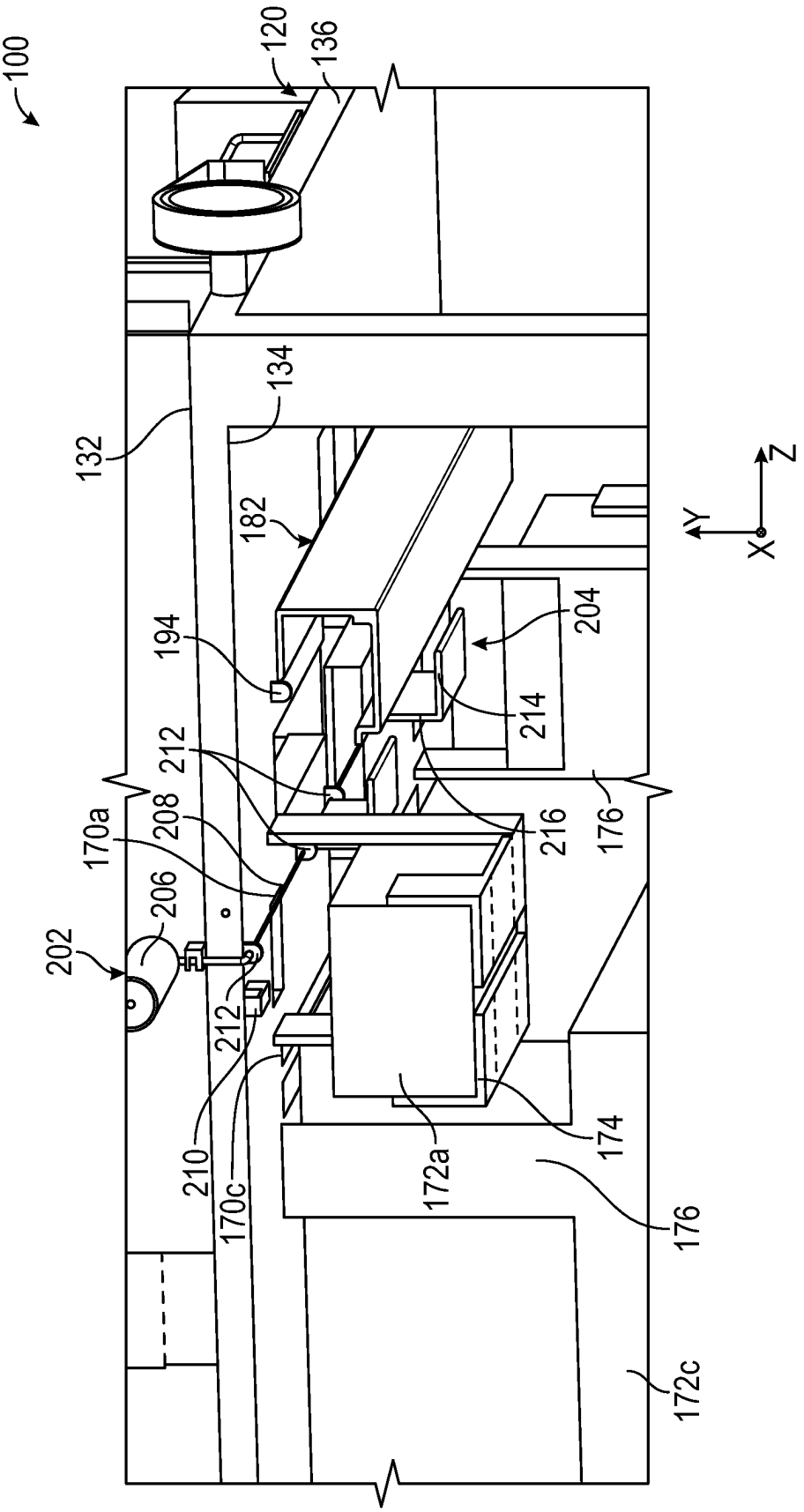
100
120
136
132
134
182
194
212
208
170a
206
202
212
210
170c
172a
174
176
216
214
204
176
172c
Z
Y
X

FIG. 3B

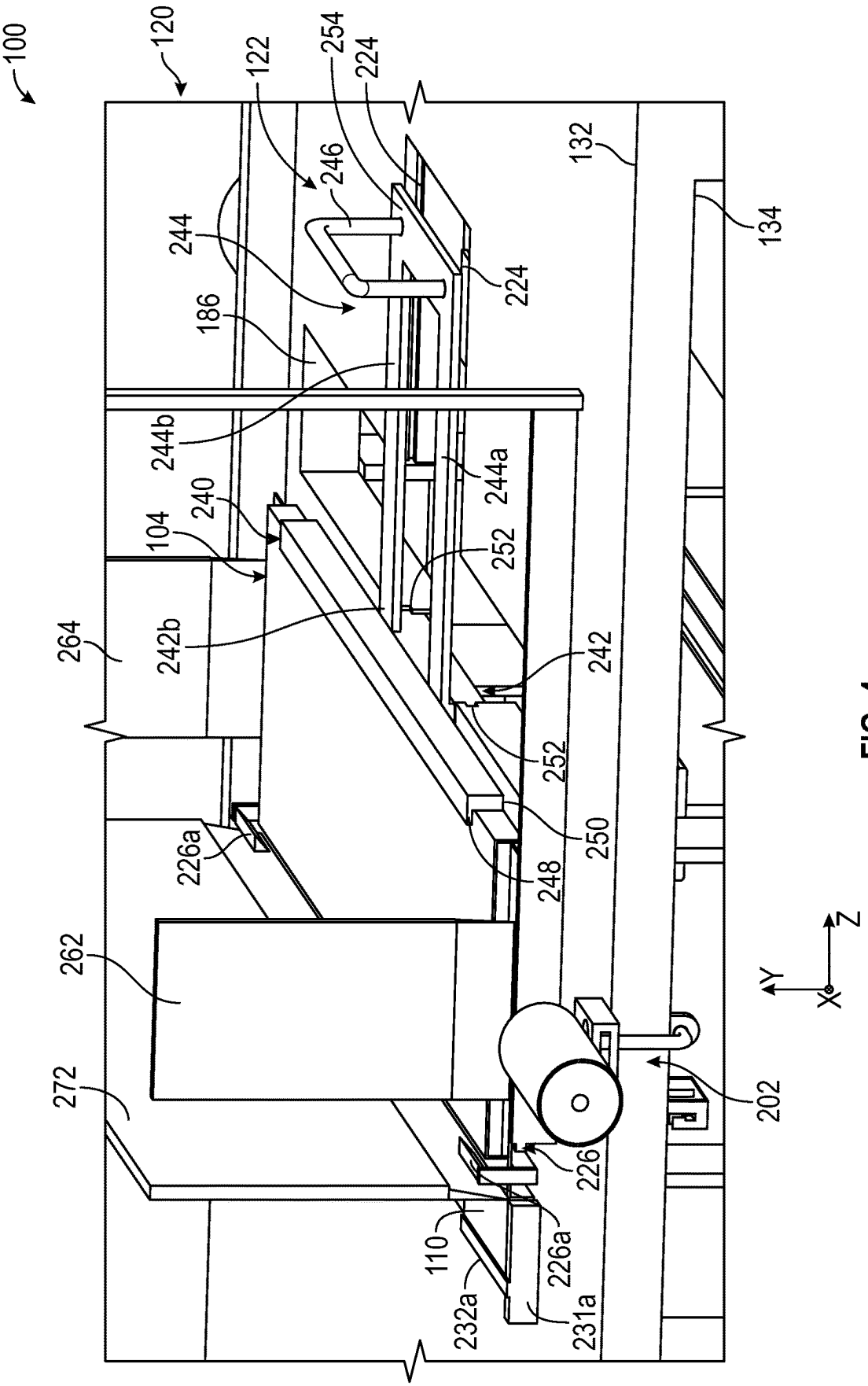
100
120
122
254
224
246
244
186
244b
240
104
264
242b
244a
252
242
252
250
248
226a
262
272
226
110
226a
232a
231a
202
132
134
224
Z
Y
X

FIG. 4

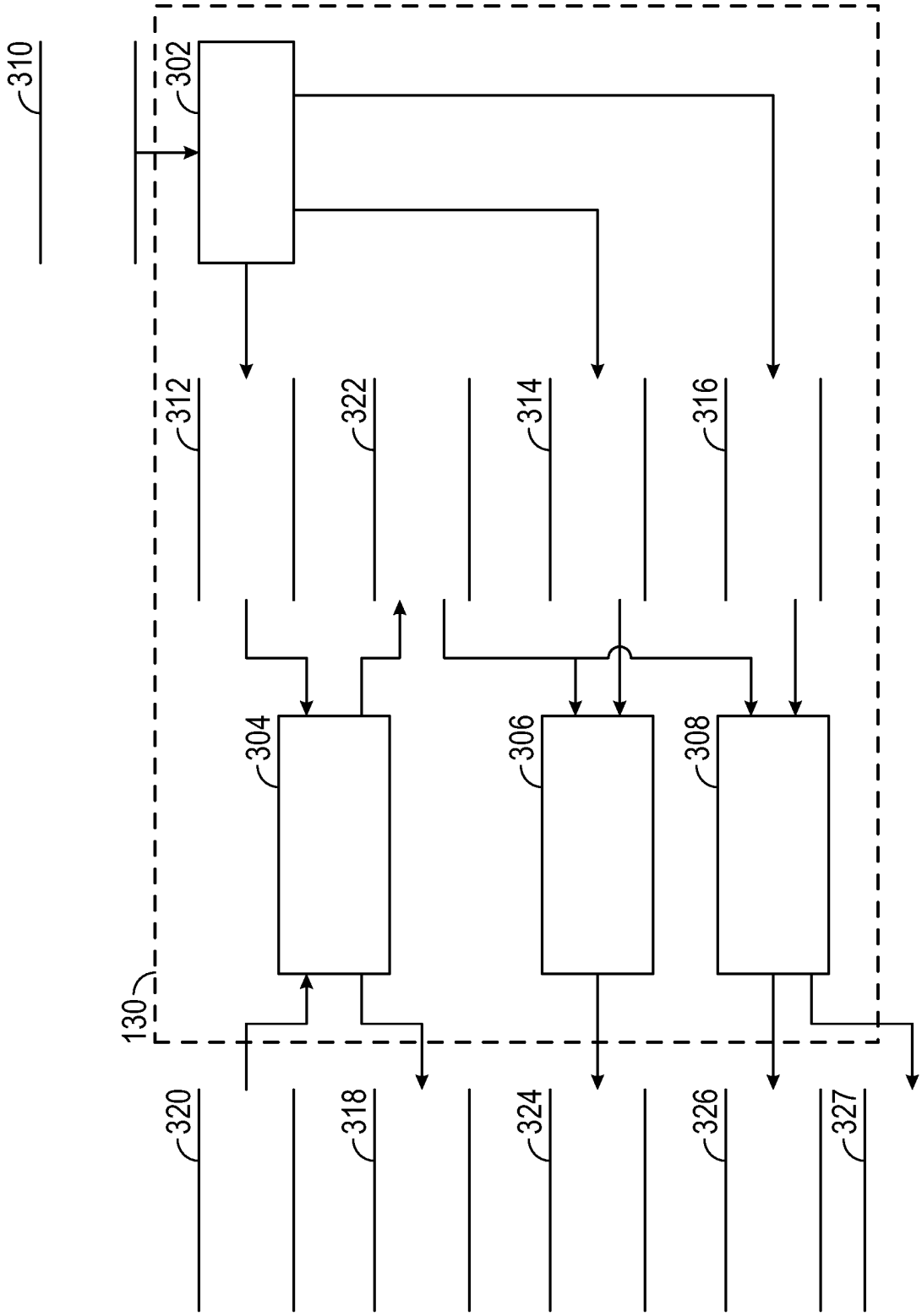

FIG. 5

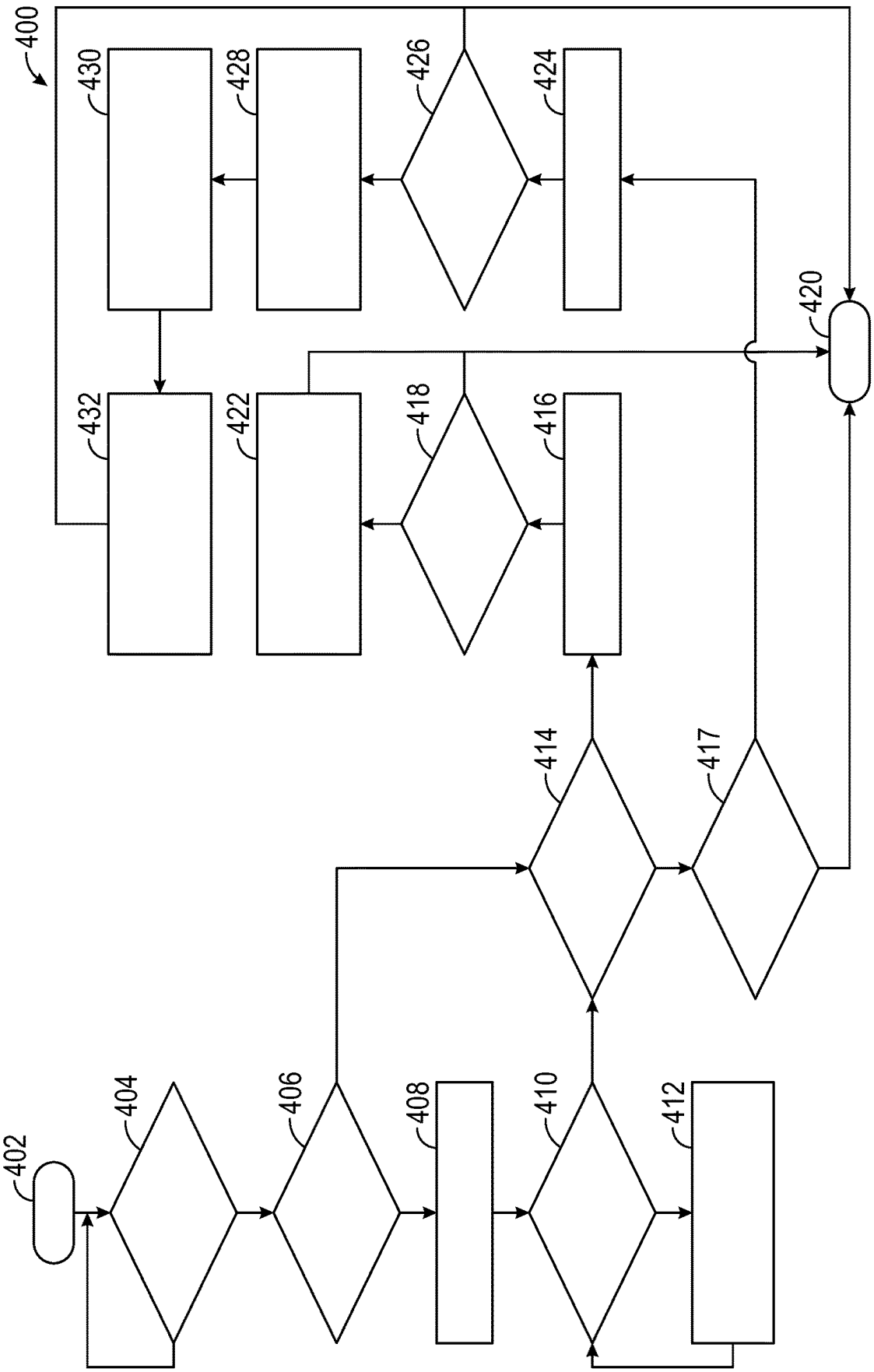
400
430
428
426
424
420
432
422
418
416
414
417
402
404
406
408
410
412

FIG. 6

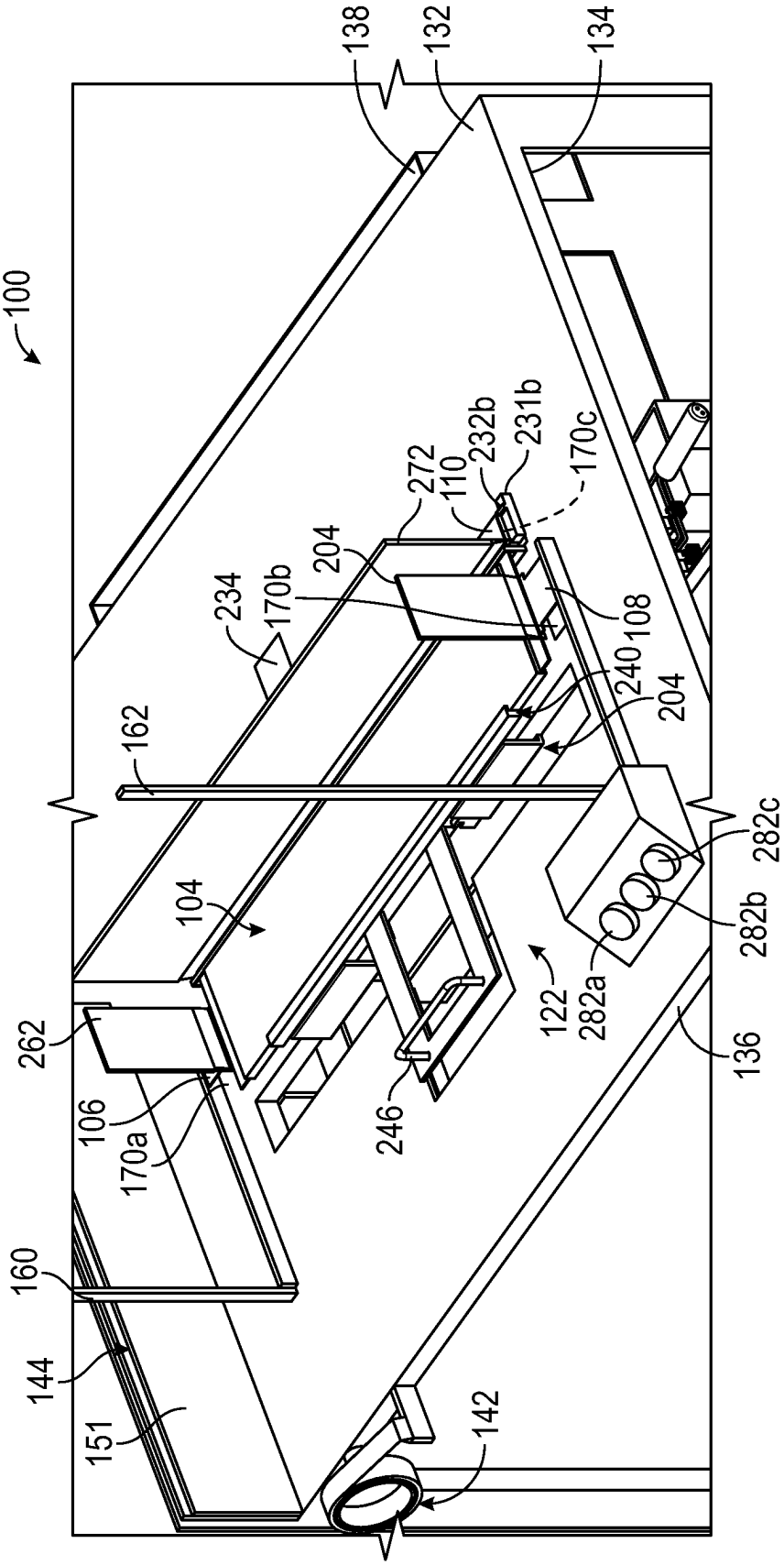
100
138
132
134
272
110
232b
231b
170c
204
234
170b
108
240
204
162
104
262
106
170a
246
122
282a
282b
282c
136
160
144
151
142

FIG. 7

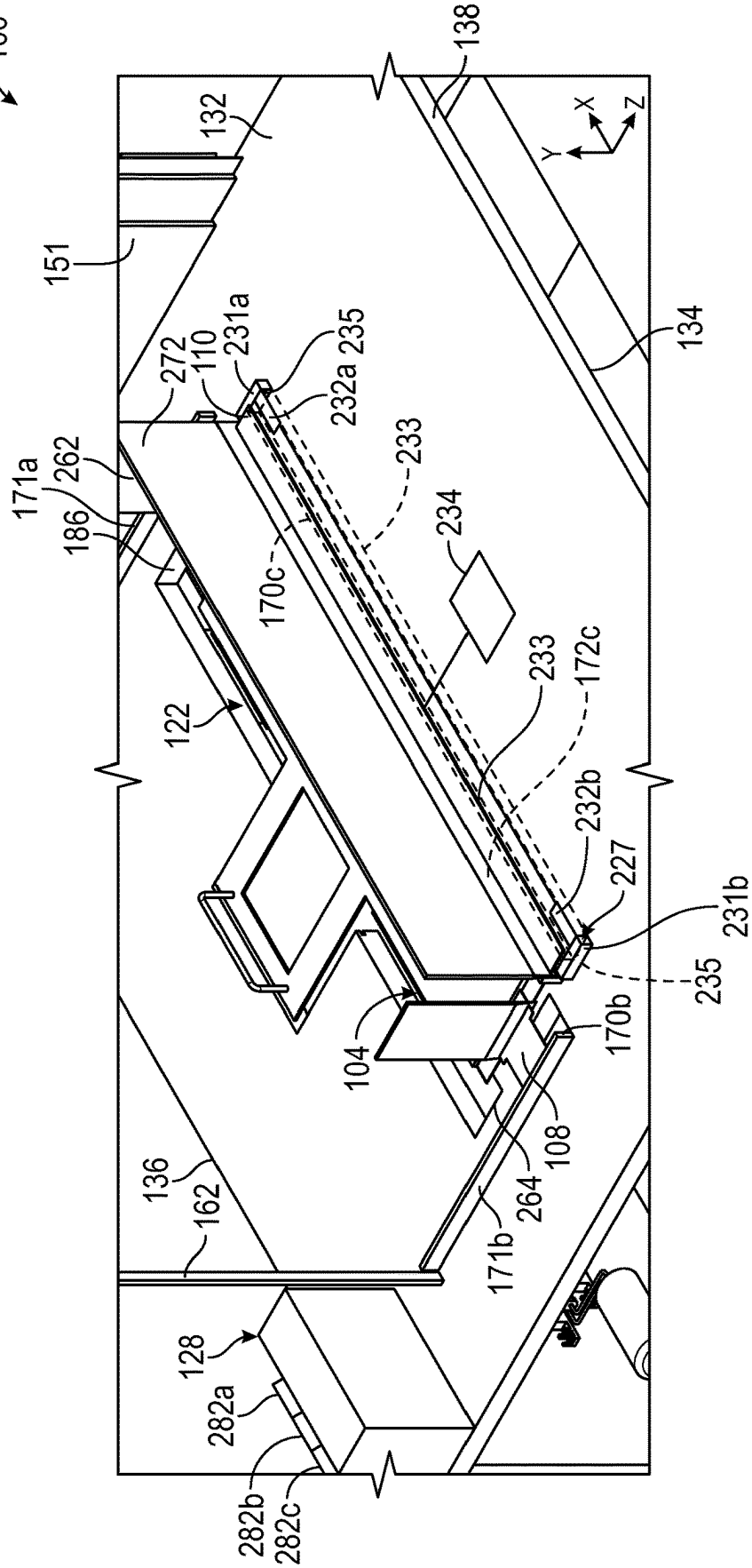
100
138
132
151
134
X
Y
Z
272
110
231a
235
232a
233
262
171a
186
234
170c
233
172c
122
232b
227
231b
235
104
170b
108
264
136
162
171b
128
282a
282b
282c

FIG. 8

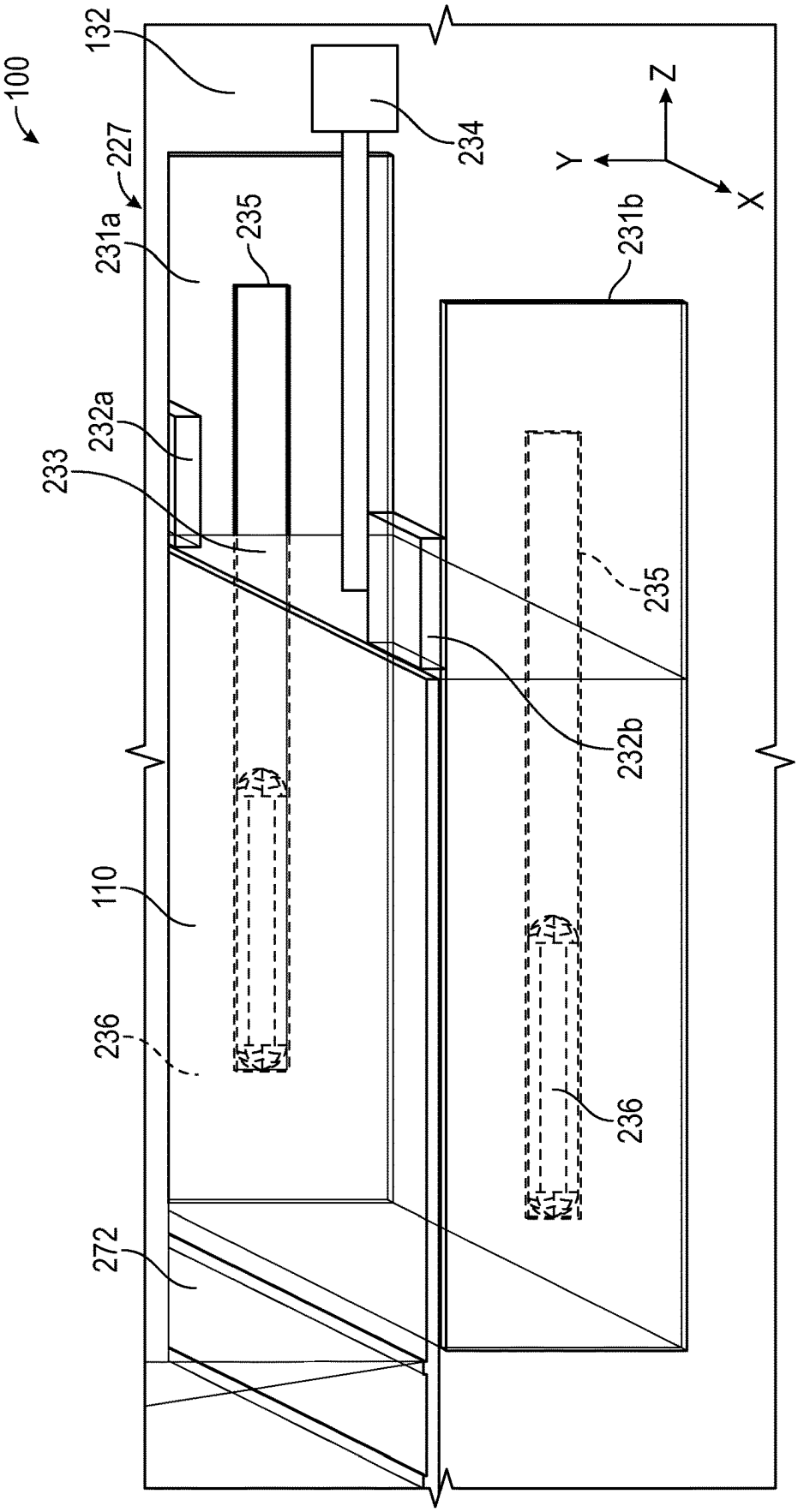
100
132
227
231a
235
233
232a
110
236
272
234
Z
Y
X
231b
235
232b
236

FIG. 8A

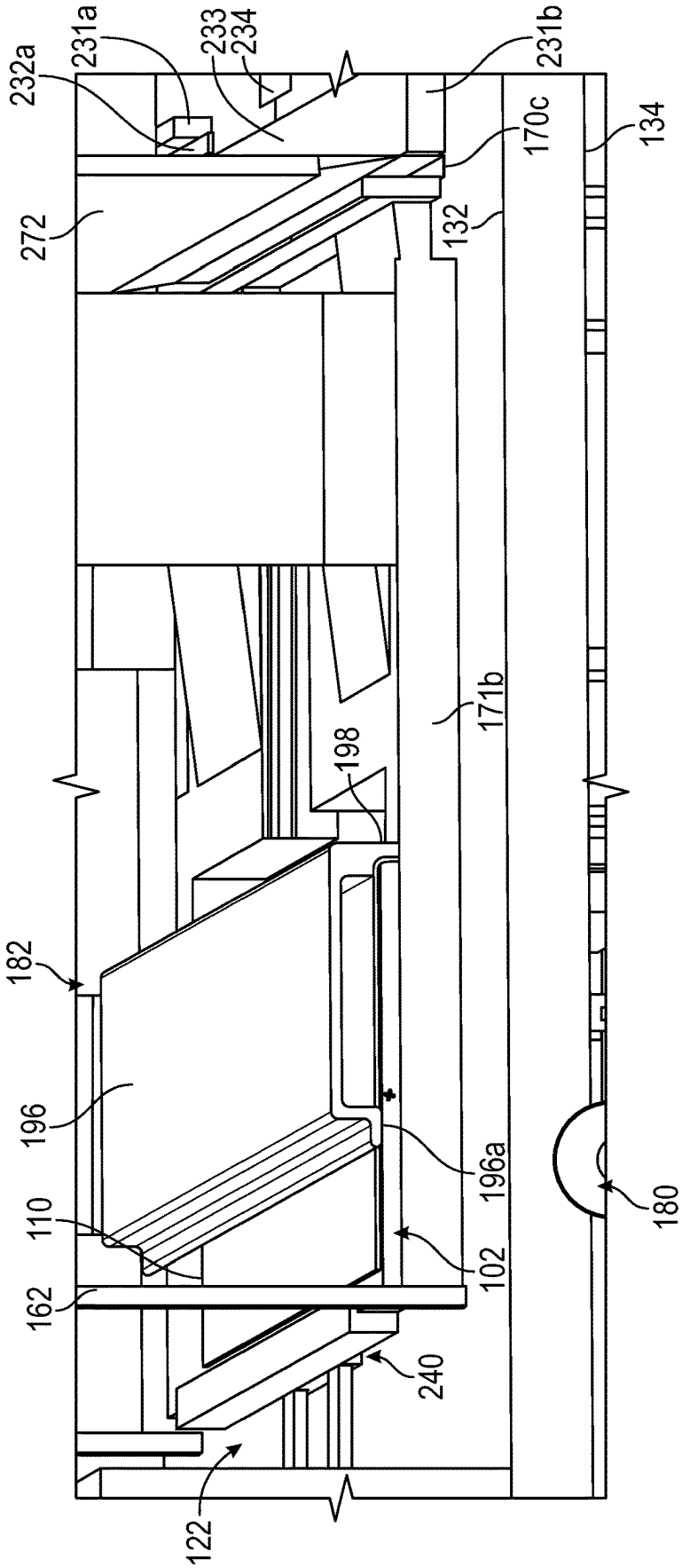
232a
231a
233
234
231b
170c
134
272
132
171b
198
182
196
196a
110
102
180
162
240
122

FIG. 9

SYSTEMS AND METHODS FOR BATTERY CELL RECYCLING

INTRODUCTION

The technical field generally relates to systems and methods for battery cell recycling, and more particularly relates to systems and methods for battery cell recycling for battery cells associated with a vehicle in which at least lead tabs associated with the battery cells are separated from the battery cell for recycling.

Many battery electric vehicles include one or more battery cells, which supply energy for use by various systems associated with the vehicle. During manufacture of the battery cells, one or more of the battery cells may not be acceptable for use. In these instances, the battery cell may be recycled. In order to recycle the battery cell, battery lead tabs associated with the battery cell are removed to reduce a risk of shorting the battery cell. The removal of the battery cell lead tabs manually, however, is time consuming and may be challenging for an operator to perform. In addition, in certain instances, depending upon the particular battery cell, the battery cell may have undergone a chemical reaction, which makes a shape of the battery cell difficult to position within a recycling receptacle.

Thus, it is desirable to provide systems and methods for battery cell recycling, in which the battery cell lead tabs are removed efficiently, and without requiring a manual operation. In addition, it is desirable to provide systems and methods for battery cell recycling, in which the size of the battery cell is uniform for positioning within a recycling receptacle. Furthermore, other desirable features and characteristics of the present invention will become apparent from the subsequent detailed description and the appended claims, taken in conjunction with the accompanying drawings and the foregoing technical field and background.

SUMMARY

According to various embodiments, provided is a battery cell recycling system. The battery cell recycling system includes a recycling table having a first table surface opposite a second table surface. The recycling table includes at least one collection slot defined through the first table surface and the second table surface, and at least one collection bin coupled to the second table surface in communication with the at least one collection slot. The battery cell recycling system includes a battery guide system coupled to the recycling table. The battery guide system is configured to receive a battery cell including a first lead tab, a second lead tab and a pouch. The battery guide system is movable between a first position and a second position, and in the second position, at least one of the first lead tab, the second lead tab and the pouch is disposed over the at least one collection slot. The battery cell recycling system includes at least one actuator configured to move at least one cutting blade to remove at least one of the first lead tab, the second lead tab and the pouch from the battery cell in the second position of the battery guide system such that the at least one of the first lead tab, the second lead tab and the pouch is received in the at least one collection bin.

The battery cell recycling system includes a safety system disposed proximate the battery guide system configured to observe whether a user has crossed the safety system and to generate signals based on the observation. The battery cell recycling system includes a controller, having a processor, configured to receive the signals from the safety system that indicate the user has crossed the safety system and inhibit a motion of the at least one actuator based on the signals. The battery cell recycling system includes a human-machine interface in communication with the controller, and the human-machine interface is configured to receive input from the user to reset the safety system and to actuate the at least one actuator. Based on the input from the user to reset the safety system and to actuate the at least one actuator, the controller is configured to output one or more control signals to the at least one actuator to move the at least one cutting blade. The at least one collection slot includes a plurality of collection slots defined through the recycling table from the first table surface to the second table surface, the at least one collection bin includes a plurality of collection bins, and each of the plurality of collection slots is in communication with a respective one of the plurality of collection bins. The at least one cutting blade includes a first tab cutting blade, a second tab cutting blade and a pouch cutting blade, each of the first tab cutting blade and the second tab cutting blade are configured to remove a respective one of the first lead tab and the second lead tab, and the pouch cutting blade is configured to remove the pouch. The battery cell recycling system includes a tape dispenser coupled to the recycling table. The battery cell recycling system includes a folding arm coupled to the recycling table and movable relative to the recycling table to fold the pouch over the battery cell. The battery cell recycling system includes at least one ramp surface configured to contact the pouch and guide the pouch as the battery guide system moves between the first position and the second position.

Further provided according to various embodiments is a method for battery cell recycling. The method includes providing a recycling table having a first table surface opposite a second table surface. The recycling table includes at least one collection slot defined through the first table surface and the second table surface and at least one collection bin coupled to the second table surface in communication with the at least one collection slot. The recycling table includes a safety system coupled to the recycling table configured to observe whether a user has crossed the safety system and to generate signals based on the observation. The method includes receiving, by a processor, user input to cut at least one of a first lead tab, a second lead tab and a pouch associated with a battery cell, and receiving, by the processor, the signals from the safety system. The method includes outputting one or more control signals, by the processor, to at least one actuator to move at least one cutting blade to remove at least one of the first lead tab, the second lead tab and the pouch associated with the battery cell such that the at least one of the first lead tab, the second lead tab and the pouch is received in the at least one collection bin based on the signals from the safety system.

Based on the signals from the safety system, the method includes inhibiting a movement of the at least one cutting blade by the at least one actuator. The at least one collection slot includes a plurality of collection slots, the at least one collection bin includes a plurality of collection bins, each of the plurality of collection bins is associated with a respective one of the plurality of collection slots, and receiving the user input to cut the at least one of the first lead tab, the second lead tab and the pouch associated with the battery cell includes receiving, by the processor, user input to cut the first lead tab and the second lead tab, and outputting the one or more control signals, by the processor, to the at least one actuator to move a first tab cutting blade and a second tab cutting blade to remove the first lead tab and the second lead tab such that the first lead tab is received in one of the

plurality of collection bins and the second lead tab is received in a second one of the plurality of collection bins based on the signals from the safety system. The at least one collection slot includes a plurality of collection slots, the at least one collection bin includes a plurality of collection bins, each of the plurality of collection bins is associated with a respective one of the plurality of collection slots, and receiving the user input to cut the at least one of the first lead tab, the second lead tab and the pouch associated with the battery cell includes receiving, by the processor, user input to cut the first lead tab, the second lead tab and the pouch, outputting one or more control signals, by the processor, to a first actuator to move a first tab cutting blade and a second tab cutting blade to remove the first lead tab and the second lead tab such that the first lead tab is received in one of the plurality of collection bins and the second lead tab is received in a second one of the plurality of collection bins based on the signals from the safety system, and outputting one or more control signals, by the processor, to a second actuator to move a pouch cutting blade to remove the pouch such that the pouch is received in a third one of the plurality of collection bins based on the signals from the safety system.

Also provided is a battery cell recycling system. The battery cell recycling system includes a recycling table having a first table surface opposite a second table surface. The recycling table includes a plurality of collection slots defined through the first table surface and the second table surface, a plurality of collection bins coupled to the second table surface in communication with a respective one of the plurality of collection slots and a safety system disposed proximate a first table end of the recycling table. The safety system is configured to observe whether a user has crossed the safety system and to generate signals based on the observation. The battery cell recycling system includes a battery guide system coupled to the recycling table. The battery guide system is configured to receive a battery cell including a first lead tab, a second lead tab and a pouch. The battery guide system is movable between a first position and a second position, and in the second position, the first lead tab, the second lead tab and the pouch are disposed over a respective one of the plurality of collection slots. The battery cell recycling system includes a controller, having a processor, configured to receive the signals from the safety system and output one or more control signals to at least one actuator based on the signals from the safety system. The at least one actuator is configured to move at least one cutting blade to remove at least one of the first lead tab, the second lead tab and the pouch from the battery cell in the second position of the battery guide system such that the at least one of the first lead tab, the second lead tab and the pouch is received in the respective one of the plurality of collection bins.

The battery cell recycling system includes a human-machine interface in communication with the controller, and the human-machine interface is configured to receive input from the user to reset the safety system and to actuate the at least one actuator. Based on the input from the user to reset the safety system and to actuate the at least one actuator, the controller is configured to output the one or more control signals to the at least one actuator to move the at least one cutting blade. The at least one cutting blade includes a first tab cutting blade, a second tab cutting blade and a pouch cutting blade that are electrically isolated from each other, each of the first tab cutting blade and the second tab cutting blade are configured to remove a respective one of the first lead tab and the second lead tab, and the pouch cutting blade is configured to remove the pouch. The battery cell recycling system includes a tape dispenser coupled to the recycling table and a folding arm coupled to the recycling table and movable relative to the recycling table to fold the pouch over the battery cell. The battery cell recycling system includes at least one ramp surface configured to contact the pouch and guide the pouch as the battery guide system moves between the first position and the second position.

BRIEF DESCRIPTION OF THE DRAWINGS

The exemplary embodiments will hereinafter be described in conjunction with the following drawing figures, wherein like numerals denote like elements, and wherein:

FIG. **1** is a functional block diagram illustrating a manufacturing system including a battery cell recycling system in accordance with various embodiments;

FIG. **1**A is a side perspective view of a first battery cell and a second battery cell associated with the battery cell recycling system;

FIG. **1**B is a side perspective view of the first battery cell and the second battery cell associated with the battery cell recycling system;

FIG. **2** is a detail view of a recycling table of the battery cell recycling system, in which a battery guide system is in a first position, a pair of ramp surfaces are in a first position and a pair of block arms are in a second position;

FIG. **2**A is a perspective view of the recycling table of the battery cell recycling system, in which a battery cell is coupled to the battery guide system, and the battery guide system and the pair of ramp surfaces are in the first position;

FIG. **2**B is a perspective view of the recycling table of the battery cell recycling system, in which the second battery cell is coupled to the battery guide system, and the battery guide system and the pair of ramp surfaces are in the second position;

FIG. **3** is a side view of the recycling table, in which the pair of block arms are in the first position and a folding arm is in a first position;

FIG. **3**A is a bottom view of the recycling table, in which the pair of block arms are in the first position and the folding arm is in the first position;

FIG. **3**B is a bottom perspective view of the recycling table, in which the pair of block arms are in the first position and the folding arm is in the first position;

FIG. **4** is a side perspective view of the recycling table, in which the second battery cell is coupled to the battery guide system, the battery guide system is in the second position and the block arms are in the first position;

FIG. **5** is a dataflow diagram illustrating a control system of the battery cell recycling system, in accordance with various embodiments;

FIG. **6** is a flowchart illustrating a method that can be performed by the battery cell recycling system in accordance with various embodiments;

FIG. **7** is a front perspective view of the recycling table, in which the second battery cell is coupled to the battery guide system, the battery guide system is in the second position, the block arms are in the second position, and a battery tab cutting blade and a pouch cutting blade have been actuated to remove lead tabs and a pouch associated with the second battery cell;

FIG. **8** is a rear perspective view of FIG. **7**;

FIG. **8**A is a detail view of a second guide bar assembly associated with the battery cell recycling system; and

FIG. **9** is a side perspective view of the recycling table, in which the first battery cell is coupled to the battery guide

system, the battery guide system is in the first position, the block arms are in the first position, and the folding arm is in a second position to fold the pouch associated with the first battery cell over the first battery cell.

DETAILED DESCRIPTION

The following detailed description is merely exemplary in nature and is not intended to limit the application and uses. Furthermore, there is no intention to be bound by any expressed or implied theory presented in the preceding introduction, brief summary or the following detailed description. As used herein, the term module refers to any hardware, software, firmware, electronic control component, processing logic, and/or processor device, individually or in any combination, including without limitation: application specific integrated circuit (ASIC), an electronic circuit, a processor (shared, dedicated, or group) and memory that executes one or more software or firmware programs, a combinational logic circuit, and/or other suitable components that provide the described functionality.

Embodiments of the present disclosure may be described herein in terms of functional and/or logical block components and various processing steps. It should be appreciated that such block components may be realized by any number of hardware, software, and/or firmware components configured to perform the specified functions. For example, an embodiment of the present disclosure may employ various integrated circuit components, e.g., memory elements, digital signal processing elements, logic elements, look-up tables, or the like, which may carry out a variety of functions under the control of one or more microprocessors or other control devices. In addition, those skilled in the art will appreciate that embodiments of the present disclosure may be practiced in conjunction with any number of systems, and that the systems described herein is merely exemplary embodiments of the present disclosure.

For the sake of brevity, conventional techniques related to signal processing, data transmission, signaling, control, machine learning models, radar, lidar, image analysis, and other functional aspects of the systems (and the individual operating components of the systems) may not be described in detail herein. Furthermore, the connecting lines shown in the various figures contained herein are intended to represent example functional relationships and/or physical couplings between the various elements. It should be noted that many alternative or additional functional relationships or physical connections may be present in an embodiment of the present disclosure.

As used herein, the term "axial" refers to a direction that is generally parallel to or coincident with an axis of rotation, axis of symmetry, or centerline of a component or components. For example, in a cylinder or disc with a centerline and generally circular ends or opposing faces, the "axial" direction may refer to the direction that generally extends in parallel to the centerline between the opposite ends or faces. In certain instances, the term "axial" may be utilized with respect to components that are not cylindrical (or otherwise radially symmetric). For example, the "axial" direction for a rectangular housing containing a rotating shaft may be viewed as a direction that is generally parallel to or coincident with the rotational axis of the shaft. Furthermore, the term "radially" as used herein may refer to a direction or a relationship of components with respect to a line extending outward from a shared centerline, axis, or similar reference, for example in a plane of a cylinder or disc that is perpendicular to the centerline or axis. In certain instances, components may be viewed as "radially" aligned even though one or both of the components may not be cylindrical (or otherwise radially symmetric). Furthermore, the terms "axial" and "radial" (and any derivatives) may encompass directional relationships that are other than precisely aligned with (e.g., oblique to) the true axial and radial dimensions, provided the relationship is predominantly in the respective nominal axial or radial direction. Also, as used herein, the terms "about" and "substantially" denote within 10% to account for manufacturing tolerances.

With reference to FIG. **1**, an exemplary battery cell recycling system **100** is shown. The battery cell recycling system **100** is used to recycle a first type of battery cell **102** (generally referred to herein as "first battery cell **102**") and a second type of battery cell **104** (generally referred to herein as "second battery cell **104**") within a manufacturing system **99**. The manufacturing system **99** may also include a source of the battery cells **102**, **104**, such as a battery cell production line, which assembles the first battery cell **102** and the second battery cell **104**, for example. Each of the first battery cell **102** and the second battery cell **104** are lithium ion battery cells, however, the first battery cell **102** and the second battery cell **104** may be composed of alternative materials for supplying energy to a vehicle, for example. In this example, each of the first battery cell **102** and the second battery cell **104** include a first lead tab **106** and a second lead tab **108** on opposite sides **103**, **105** of the battery cell **102**, **104**. The first lead tab **106** is composed of aluminum, and the second lead tab **108** is composed of copper. With reference to FIG. **1**A, the first lead tab **106** of the battery cell **102**, **104** is coupled to the battery cell **102**, **104** so as to extend outwardly from the side **103** and so as to be positioned between opposite surfaces **107**, **109** of the respective battery cell **102**, **104**. The battery cell recycling system **100** is configured to remove the first lead tab **106** from the battery cell **102**, **104** without contacting the side **103** of the battery cell **102**, **104**. Stated another way, the battery cell recycling system **100** removes the first lead tab **106** without cutting through a respective housing or enclosure **102***a*, **104***a* of the battery cell **102**, **104**. In this example, the first lead tab **106** and the second lead tab **108** are positioned proximate a first end **102***b*, **104***b* of the respective battery cell **102**, **104**. With reference to FIG. **1**B, the second lead tab **108** of the battery cell **102**, **104** is coupled to the battery cell **102**, **104** so as to extend outwardly from the side **105** and so as to be positioned between the surfaces **107**, **109** of the respective battery cell **102**, **104**. The battery cell recycling system **100** is configured to remove the second lead tab **108** from the battery cell **102**, **104** without contacting the side **105** of the battery cell **102**, **104**. Stated another way, the battery cell recycling system **100** removes the second lead tab **108** without cutting through the enclosure **102***a*, **104***a* of the battery cell **102**, **104**. Each of the first lead tab **106** and the second lead tab **108**, once removed from the battery cell **102**, **104**, may be recycled and reused for subsequent battery cells, for example. Generally, the battery cell **102**, **104** has a thickness Tin a first portion **101** of each of the battery cells **102**, **104**. The first portion **101** of the battery cells **102**, **104** includes the lead tabs **106**, **108**, and extends from the first end **102***b*, **104***b* to a pouch **110**. The thickness T is about 10 millimeters (mm).

Each of the battery cells **102**, **104** includes the pouch **110**. The pouch **110** extends from proximate the lead tabs **106**, **108** to the second end **102***c*, **104***c* of the respective battery cell **102**, **104**. The pouch **110** is expandable based on a chemical reaction occurring within the battery cell **102**, **104**. In the example of the first battery cell **102**, the pouch **110** is

expanded and has a length L**1** as the pouch **110** of the first battery cell **102** is filled with gas from the chemical reaction within the first battery cell **102**. The length L**1** is different and larger than a length L**2** of the pouch **110** of the second battery cell **104**. In one example, the length L**1** is greater than the length L**2** by about 60 millimeters (mm). The length L**2** of the second battery cell **104** is different and less than the length L**1** as the chemical reaction has already occurred in the second battery cell **104** and the pouch **110** has already been trimmed during the manufacture of the second battery cell **104**. The length L**1** of the pouch **110** provides a visual indicator as to whether the chemical reaction has occurred within the first battery cell **102**. Each of the first battery cell **102** and the second battery cell **104** also include a seal **111**, **112**. The seal **111**, **112** encloses the contents of the respective first battery cell **102** and the second battery cell **104**. In the example of the first battery cell **102**, the seal **111** is at the second end **102***c* of the pouch **110** and spaced a distance apart from the lead tabs **106**, **108**. In the example of the second battery cell **104**, the seal **112** is proximate or adjacent to the lead tabs **106**, **108** as the pouch **110** has been trimmed during manufacturing. As will be discussed, in instances where the pouch **110** has been trimmed during manufacturing and the seal **112** is proximate the lead tabs **106**, **108** or the second battery cell **104** has the length L**2**, the pouch **110** may be further removed to assist in recycling the second battery cell **104**.

In this example, the battery cell recycling system **100** is positioned within the manufacturing system **99** to assist in recycling the battery cells **102**, **104** that are unacceptable. In one example, the battery cell recycling system **100** includes a recycling table **120**, a battery guide system **122**, a battery lead tab cutting system **124**, a battery pouch cutting system **126**, a human-machine interface **128** and a controller **130**.

The recycling table **120** supports the battery guide system **122**, the battery lead tab cutting system **124**, the battery pouch cutting system **126**, the human-machine interface **128** and the controller **130**. The recycling table **120** may be in communication with a source of power, pressurized air, etc. associated with the manufacturing system **99**. In one example, the recycling table **120** is substantially rectangular, however, the recycling table **120** may have any desired shape. The recycling table **120** has a first table surface **132** opposite a second table surface **134**, and a first table end **136** opposite a second table end **138**. The battery guide system **122**, the human-machine interface **128** and the controller **130** are generally coupled to the first table surface **132**. The second table surface **134** generally includes one or more support structures, such as legs **140**, which elevate the first table surface **132** to a height suitable for an operator to interface with the battery guide system **122**, the battery lead tab cutting system **124**, the battery pouch cutting system **126** and the human-machine interface **128**. In one example, the recycling table **120** also includes a tape dispenser **142**, a safety system **144**, a collection system **146**, a pouch folding system **148**, a guide system **150** and a verification gauge **151**.

In one example, the tape dispenser **142** dispenses a strip of adhesive tape, which is used to secure the pouch **110** when folded by the pouch folding system **148**. In this example, the tape dispenser **142** is coupled to the first table end **136**, however, the tape dispenser **142** may be coupled at any suitable location on the recycling table **120**. The recycling table **120** may include a post **152** and a cutting blade **154** at the first table end **136**. The post **152** may be cylindrical and sized to receive a roll **156** of the adhesive tape. The cutting blade **154** may be composed of metal or metal alloy, and may include a plurality of small teeth, which may be used to cut the adhesive tape from the roll **156** into strips. With reference to FIG. **2**A, the first table end **136** may include a marking **157** spaced a distance apart from the cutting blade **154**. The marking **157** is a visual indicator to the operator of a predetermined amount or length of adhesive tape needed to tape the pouch **110** to the first battery cell **102**. The marking **157** may be a red mark, etch, etc. defined in the recycling table **120** at the first table end **136**. It should be noted that in other examples, the tape dispenser **142** may be configured to dispense tape at the predetermined length to tape the pouch **110** to the first battery cell **102**.

The safety system **144** is disposed proximate the battery guide system **122** to observe whether the operator is in contact with the battery guide system **122** in the second position. In one example, the safety system **144** is a light curtain, which includes a photoelectric transmitter bar **160** and a receiver bar **162** disposed on either side of the battery guide system **122** proximate the first table end **136**. In the example of the safety system **144** as the light curtain, the light curtain observes whether the user has crossed the light curtain and generates signals based on the observation. The transmitter bar **160** and the receiver bar **162** are each in communication with the controller **130** over a communication medium that facilitates the transfer of data, power, etc., including, but not limited to, a bus. The transmitter bar **160** includes a plurality of light emitting elements, such as light emitting diodes, which emit infrared light when energized. The light emitting elements are generally arranged to emit a plurality of parallel infrared light beams based on one or more control signals received from the controller **130**. The receiver bar **162** is spaced apart from the transmitter bar **160**, and is configured to receive the light emitted by the light emitting elements of the transmitter bar **160**. The receiver bar **162** includes a plurality of phototransistors. Generally, the plurality of light emitting elements of the transmitter bar **160** are sequenced and modulated, and the phototransistors of the receiver bar **162** detect the specific pulse and frequency of a particular one of the light emitting elements associated with the transmitter bar **160**. If any of the phototransistors of the receiver bar **162** do not receive the infrared light beam from the associated light emitting element, the receiver bar **162** outputs one or more signals to the controller **130** that the light beam was not detected. If the light beam is not detected, the safety system **144** is in an alert state, which indicates that the operator has crossed the safety system **144** or has crossed one of the light beams output by the transmitter bar **160**. If the light beam is detected, the safety system **144** is in an active state. Generally, the safety system **144** is disposed proximate the first table end **136**, and is positioned in front of the battery lead tab cutting system **124** and the battery pouch cutting system **126** on the recycling table **120** to ensure that an operator is not proximate either the battery lead tab cutting system **124** or the battery pouch cutting system **126** during operation. The transmitter bar **160** and the receiver bar **162** extend from the first table surface **132** along a vertical or Y-axis. The first table end **136** is opposite the second table end **138** in a Z-direction, which is perpendicular to the Y-axis.

The collection system **146** includes a plurality of collection slots **170** and a plurality of collection bins **172**. In one example, the plurality of collection slots **170** includes three collection slots **170***a*-**170***c*. The collection slots **170***a*-**170***c* are defined to extend through the first table surface **132** and the second table surface **134**. With reference to FIG. **2**, the collection slots **170***a*, **170***b* are defined on opposed sides of the battery guide system **122**. The collection slots **170***a*,

170*b* are substantially rectangular, and are sized to receive a respective one of the lead tabs **106**, **108** (FIG. **1**). In one example, the collection slot **170***a* receives the first lead tab **106**, and the collection slot **170***b* receives the second lead tab **108**. With reference to FIG. **2**B, the recycling table **120** includes two guide rails **171***a*, **171***b*, which are coupled to the first table surface **132** proximate or adjacent to the collection slots **170***a*, **107***b*. The guide rails **171***a*, **171***b* extend from the respective one of the transmitter bar **160** and the receiver bar **162** toward the second table end **138**. The guide rails **171***a*, **171***b* provide a physical and visual indicator as to the alignment of the lead tabs **106**, **108** on the recycling table **120** as the battery cell **102**, **104** is advanced by the battery guide system **122** for the cutting operation. With reference back to FIG. **2**, the collection slots **170***a*, **170***b* are defined along an end of the respective guide rail **171***a*, **171***b* opposite the transmitter bar **160** and the receiver bar **162** to receive the respective lead tab **106**, **108** at the end of the cutting operation. The collection slot **170***c* is defined adjacent to the battery guide system **122**. Generally, the collection slot **170***c* extends along a horizontal or X-axis of the recycling table **120**, with the Y-axis perpendicular to the X-axis. The collection slots **170***a*, **170***b* are in communication with the battery lead tab cutting system **124**, and the collection slot **170***c* is in communication with the battery pouch cutting system **126**.

With reference to FIGS. **1**, **3** and **3**A, the plurality of collection bins **172** are coupled to the second table surface **134**. In one example, the plurality of collection bins **172** includes three collection bins **172***a*-**172***c*. The collection bins **172***a* (FIG. **1**), **172***b* (FIG. **3**) are each coupled to the second table surface **134** so as to be disposed directly beneath a respective one of the collection slots **170***a*, **170***b* and in communication with the respective one of the collection slots **170***a*, **170***b*. The collection bin **172***c* is coupled to the second table surface **134** so as to be disposed directly beneath the collection slot **170***c* and in communication with the collection slot **170***c*. The collection bins **172***a*-**172***c* may be composed of metal, metal alloy or a polymer-based material, and may be cast, stamped, molded, additively manufactured, etc. The collection bins **172***a*-**172***c* are each coupled to the second table surface **134** so as to be removable from the recycling table **120**. For example, the second table surface **134** may include one or more shelves **174**, which are coupled to the second table surface **134** by a pair of support arms **176**. The shelves **174** are spaced apart from the second table surface **134** by the support arms **176** so that the respective collection bin **172***a*-**172***c* may be positioned between the shelf **174** and the second table surface **134**. In one example, the support arms **176** may have an L-shape such that respective pairs of support arms **176** define the shelf **174**. By removably coupling the collection bins **172***a*-**172***c* to the recycling table **120**, the collection bins **172***a*-**172***c* may be removed once filled, emptied, and returned to the recycling table **120** for reuse.

The pouch folding system **148** assists the operator in reducing a size of the first battery cell **102**. In this regard, as the chemical reaction has occurred within the first battery cell **102**, and the pouch **110** is expanded, the pouch **110** is not cut to reduce a size of the first battery cell **102** for further recycling. Instead, in order to package the first battery cell **102** for further recycling, the pouch **110** is folded over and taped with the adhesive strip from the tape dispenser **142**. With reference to FIG. **3**, the pouch folding system **148** includes a handle **180** and a folding arm **182**. The handle **180** is movable or rotatable relative to the recycling table **120** to move the folding arm **182**. In one example, the recycling table **120** includes a fold slot **186** (FIG. **2**) through which the folding arm **182** is received. The handle **180** is coupled to the folding arm **182** such that a rotation of the handle **180** results in a rotation of the folding arm **182**. The handle **180** includes a graspable member **188** and a shaft **190**. The graspable member **188** enables an operator to grab the handle **180** to rotate the handle **180** relative to the recycling table **120**. In one example, the graspable member **188** is a knob. The recycling table **120** may include a flange **192**, which projects outwardly from the second table surface **134** and receives the handle **180** in a first position. In the first position, the folding arm **182** is recessed or disposed below the second table surface **134**. In a second position, the folding arm **182** extends through the fold slot **186** (FIG. **2**) to fold the pouch **110** over the first battery cell **102** (FIG. **9**). The shaft **190** is rotatably coupled to the recycling table **120** via one or more shaft flanges **194**. The shaft flanges **194** may be substantially U-shaped, and may define a bore that receives the shaft **190** to enable the shaft **190** to rotate relative to the recycling table **120**.

The folding arm **182** is coupled to the shaft **190**. The folding arm **182** is substantially C-shaped, and includes a first folding arm **196**, a second folding arm **198** and a base **200**. The first folding arm **196** includes a lip **196***a*, which initially contacts the pouch **110** during a rotation of the handle **180**. The first folding arm **196** is substantially parallel to the second table surface **134** or the Z-axis in the first position and the second position of the handle **180**. The second folding arm **198** extends substantially perpendicular to the first folding arm **196**, and is substantially parallel to the Y-axis in the first position and the second position. The second folding arm **198** is coupled to or integrally formed with the first folding arm **196**, and is coupled to or integrally formed with the base **200**. The second folding arm **198** is sized to enable the first folding arm **196** to extend through the fold slot **186**, over the pouch **110** and the first battery cell **102** to hold the pouch **110** folded over the first battery cell **102** to enable the operator to secure the folded pouch **110** to the first battery cell **102**. The base **200** is coupled to the shaft **190**. In one example, the base **200** may be injection molded onto the shaft **190** or press fit onto shaft **190**, however, mechanical fasteners may be used to couple the base **200** to the shaft **190**. The base **200** is coupled to the shaft **190** such that the shaft **190** does not rotate relative to the base **200**.

In one example, the recycling table **120** also includes a blocking arm system **184** rotatably coupled to the recycling table **120**. With reference to FIG. **3**B, the blocking arm system **184** includes a second handle **202** and a pair of block arms **204**. The second handle **202** is movable or rotatable relative to the recycling table **120** to move the block arms **204** into the fold slot **186**. The block arms **204** inhibit a movement of the battery cell **102**, **104** rearward or away from a respective at least one of a first tab cutting blade **262**, a second tab cutting blade **264** and a pouch cutting blade **272** during the cutting operation. The second handle **202** is coupled to the block arms **204** such that a rotation of the second handle **202** results in a rotation of the block arms **204**. The second handle **202** includes a second graspable member **206** and a shaft **208**. The second graspable member **206** enables an operator to grab the second handle **202** to rotate the second handle **202** relative to the recycling table **120**. In one example, the second graspable member **206** is a knob. The recycling table **120** may include a flange **210** (see also FIG. **2**), which projects outwardly from the second table surface **134** and receives the second handle **202** in the second position. In a first position, the block arms **204** are recessed or disposed below the second table surface **134**. In

the second position, the block arms **204** extend through the fold slot **186** (FIG. **2**) to inhibit a movement of the battery cell **102**, **104** during the cutting operation. Generally, in the first position, the second handle **202** is orientated about perpendicular to the first table surface **132**. A rotation of the second handle **202** counterclockwise or toward the first table surface **132** by about 90 degrees moves the block arms **204** from the first position to the second position. The shaft **208** is rotatably coupled to the recycling table **120** via one or more shaft flanges **212**. The shaft flanges **212** may be substantially U-shaped, and may define a bore that receives the shaft **208** to enable the shaft **208** to rotate relative to the recycling table **120**.

The block arms **204** are each coupled to the shaft **208** so as to be spaced a distance apart along the shaft **208**. Each of the block arms **204** is substantially L-shaped, and includes a first arm **214** and a second arm **216**. The first arm **214** is substantially parallel to the second table surface **134** or the Z-axis in the first position of the second handle **202** and is substantially perpendicular to the second table surface **134** or the Z-axis in the second position of the second handle **202**. The second arm **216** extends substantially perpendicular to the first arm **214**, and is substantially parallel to the Y-axis in the first position and is perpendicular to the Y-axis in the second position. The second arm **216** is coupled to or integrally formed with the first arm **214**. The second arm **216** is coupled to or integrally formed with the shaft **208**. In one example, the second arm **216** may be injection molded onto the shaft **208** or press fit onto shaft **208**, however, mechanical fasteners may be used to couple the second arm **216** to the shaft **208**. The second arm **216** is coupled to the shaft **208** such that the shaft **208** does not rotate relative to the second arm **216**.

With reference to FIG. **2**, the guide system **150** includes a pair of ramp surfaces **220**, a pair of first channels **222**, a pair of second channels **224** and a guide bar **226** (FIG. **4**). The pair of ramp surfaces **220** are coupled to the first table surface **132** so as to be proximate a respective one of the first pair of channels **222**. The pair of ramp surfaces **220** are generally positioned between the collection slots **170***a*, **170***b* and a guide slot **228** defined in the recycling table **120**. The guide slot **228** is defined through the first table surface **132** and the second table surface **134**, and enables a portion of the battery guide system **122** to move relative to the recycling table **120**. The guide slot **228** is in communication with the fold slot **186**. The pair of ramp surfaces **220** cooperate to support the battery cell **102**, **104** during cutting of the battery cell **102**, **104** by at least one of the battery lead tab cutting system **124** and the battery pouch cutting system **126**. In one example, each of the ramp surfaces **220** is inclined with a positive angle relative to the first table surface **132** to assist in directing the pouch **110** upward, and over into the position for removal by the battery pouch cutting system **126**, if desired. In this regard, in certain instances, the pouch **110** may sag, and the ramp surfaces **220** assist in guiding the pouch **110** up and over the collection slot **170***c*.

In this example, each of the ramp surfaces **220** are spring biased by a biasing member or spring **221**, and are received within a respective pocket **223** defined in the first table surface **132**. In one example, the spring **221** is a coiled compression spring, which biases the ramp surfaces **220** in a first position (FIG. **2**) when the battery cell **102**, **104** is not disposed over the ramp surfaces **220** for the cutting operation. In a second position, shown in FIG. **2**B, the ramp surfaces **220** are positioned within the respective pocket **223** and each of the springs **221** are compressed by the weight of the battery cell **102**, **104**. When the battery cell **102**, **104** is removed from the ramp surfaces **220**, at the end of the cutting operation, the springs **221** bias the ramp surfaces **220** back to the first position (FIG. **2**). Generally, the pocket **223** is defined at a depth into the first table surface **132** such that substantially an entirety of the respective ramp surface **220** and the spring **221** is contained within the pocket **223** when the battery cell **102**, **104** is positioned over the ramp surfaces **220**.

The first channels **222** are defined through opposed sides of guide slot **228** of the recycling table **120** so as to extend below the first table surface **132** and above the second table surface **134**. The first channels **222** are substantially U-shaped, and receive a portion of the battery guide system **122**. The first channels **222** guide a movement or translation of the portion of the battery guide system **122** relative to the recycling table **120**.

With reference to FIG. **4**, the second channels **224** are defined through the recycling table **120** from the first table surface **132** to the second table surface **134**. In this example, the second channels **224** are defined through opposed sides of a second guide slot **229** of the recycling table **120** so as to extend below the first table surface **132** and above the second table surface **134**. The second guide slot **229** (FIG. **2**) is defined through the first table surface **132** and the second table surface **134**, and enables a portion of the battery guide system **122** to move relative to the recycling table **120**. The second guide slot **229** is in communication with the fold slot **186**. Generally, the second channels **224** are defined proximate the first table end **136** (FIG. **2**) and extend from proximate the first table end **136** to the fold slot **186** within the second guide slot **229**. The second channels **224** receive the portion of the battery guide system **122** and guide the portion of the battery guide system **122** as the battery guide system **122** moves or translates relative to the recycling table **120**. The second channels **224** are substantially co-planar with the first channels **222** to provide guidance for the battery guide system **122** as the battery guide system **122** moves relative to the recycling table **120**.

The guide bar **226** is coupled to the first table surface **132** and extends upward from the first table surface **132** in the direction of the Y-axis. The guide bar **226** is substantially rectangular to provide a guide for the battery pouch cutting system **126** and ensures that the battery cell **102**, **104** is flush during the cutting operation. The guide bar **226** also serves as a stop to limit further advancement of the battery cell **102**, **104** by contacting the first portion **101** of the battery cell **102**, **104** when the battery cell **102**, **104** is positioned for the cutting operation (FIG. **4**). In one example, with reference to FIG. **2**B, the guide bar **226** includes a pair of guide slots **226***a* at opposite ends of the guide bar **226**. The guide slots **226***a* are substantially C-shaped, and serve to direct the pouch **110** over the collection slot **170***c* for cutting by the battery pouch cutting system **126**, if desired. The guide bar **226** is positioned adjacent to or along the collection slot **170***c* so as to face the first table end **136**. A second guide bar assembly **227** may also be coupled proximate or along the collection slot **170***c* so as to face the second table end **138**. The second guide bar assembly **227** extends along the collection slot **170***c* and provides a support for the pouch **110** during the cutting operation.

In one example, the second guide bar assembly **227** also assists in depositing the pouch **110** into the collection bin **172***c* after the cutting operation is completed. In this example, with reference to FIG. **8**, the second guide bar assembly **227** includes a pair of guide rails **231***a*, **231***b*, a pair of fingers **232***a*, **232***b*, a movable guide bar **233** and a guide actuator **234**. The guide rails **231***a*, **231***b* are coupled

to the first table surface **132** so as to be on opposite sides of the pouch cutting blade **272**. Each of the guide rails **231***a*, **231***b* includes a slot **235**. Each slot **235** is sized to receive a portion of the movable guide bar **233**. Each slot **235** guides a movement of the movable guide bar **233** relative to the first table surface **132**. The guide rails **231***a*, **231***b* are coupled to the first table surface **132** to extend substantially along the Z-axis, and each slot **235** is defined in the respective guide rail **231***a*, **231***b* so as to extend in a direction substantially parallel to the Z-axis. Each finger **232***a*, **232***b* is coupled to a surface of a respective one of the guide rails **231***a*, **231***b* such that the fingers **232***a*, **232***b* are on opposite sides of the pouch cutting blade **272**. Each finger **232***a*, **232***b* is coupled to a respective one of the guide rails **231***a*, **231***b* to extend substantially perpendicular to the Z-axis. The fingers **232***a*, **232***b* cooperate to push the pouch **110** into the collection bin **172***c* when the movable guide bar **233** is moved relative to the first table surface **132**. It should be noted that while the fingers **232***a*, **232***b* are shown and described herein as comprising two discrete fingers, the fingers **232***a*, **232***b* may compose a single bar that extends between the guide rails **231***a*, **231***b*, if desired. Generally, the fingers **232***a*, **232***b* are coupled to the guide rails **231***a*, **231***b* to enable the movable guide bar **233** to move under the fingers **232***a*, **232***b* upon completion of the cutting operation for the pouch **110**.

The movable guide bar **233** is slidably coupled to the slot **235** of the respective one of the guide rails **231***a*, **231***b*. The movable guide bar **233** is substantially rectangular, and is sized to support the pouch **110** during the cutting operation for the pouch **110**. The movable guide bar **233** has a surface that supports the pouch **110**, which is substantially planar or flush with a surface of the guide rails **231***a*, **231***b* to which the fingers **232***a*, **232***b* are coupled. In this example, with reference to FIG. **8**A, the movable guide bar **233** includes flanges **236** on opposite ends that engage with the slot **235** of the respective guide rail **231***a*, **231***b* to guide the movement of the movable guide bar **233** relative to the first table surface **132**. Generally, the movable guide bar **233** is movable from a first position, in which an end of the movable guide bar **233** is proximate the pouch cutting blade **272** during the cutting operation for the pouch **110** to a second position, in which the movable guide bar **233** is moved or retracted along the Z-axis to further expose the collection slot **170***c* and assist in depositing the pouch **110** in the collection bin **172***c*.

In one example, with reference back to FIG. **8**, the guide actuator **234** includes, but is not limited to, a linear actuator having a movable or translatable linear rod. The guide actuator **234** may be an electric linear actuator or a pneumatic linear actuator. The guide actuator **234** is in communication with the controller **130** (FIG. **1**) over a communication media that facilitates the transfer of data, power, etc. In the instance of the guide actuator **234** as a pneumatic linear actuator, the guide actuator **234** may also be in communication with a source of pressurized air. In one example, the guide actuator **234** is responsive to one or more control signals from the controller **130** to retract the linear rod and extend the linear rod in a single actuation cycle. The linear rod of the guide actuator **234** is coupled to the movable guide bar **233** on an end of the movable guide bar **233**, which is opposite the end of the movable guide bar **233** proximate the pouch cutting blade **272** during the cutting operation of the pouch **110**. As will be discussed, once the cutting operation for the pouch **110** is complete, the controller **130** transmits the one or more control signals to the guide actuator **234** to retract the linear rod to move the movable guide bar **233** relative to the first table surface **132** along the Z-axis toward the second table end **138**. This movement of the movable guide bar **233** causes the pouch **110** resting on the movable guide bar **233** to contact the fingers **232***a*, **232***b*. The contact between the fingers **232***a*, **232***b* and the pouch **110** as the movable guide bar **233** continues to retract toward the second table end **138** causes the pouch **110** to slide off the movable guide bar **233** and fall through the collection slot **170***c* into the collection bin **172***c*. The extension of the linear rod moves the movable guide bar **233** back to prepare for a subsequent cutting operation for the pouch **110**.

With reference back to FIG. **7**, the verification gauge **151** is coupled to the first table surface **132** so as to be opposite the human-machine interface **128**. The verification gauge **151** is generally coupled so as to be adjacent to the transmitter bar **160**. The verification gauge **151** comprises opposing sidewalls **230**, which extend outwardly from the first table surface **132** along the Y-axis. The sidewalls **230** are substantially planar, and are spaced apart by a predetermined width W1 (FIG. **2**). The predetermined width W1 is an acceptable width of the first battery cell **102** for positioning within a recycling receptacle, such as a shipping container, for recycling. The verification gauge **151** provides an easy way for the operator to ensure that the first battery cell **102** is at the acceptable width without requiring the use of measuring devices, for example, as the pouch **110** of the first battery cell **102** is folded by the operator and taped. In the example of FIG. **2**, the first battery cell **102** with the pouch **110** taped is positioned within the verification gauge **151** to ensure that the first battery cell **102** meets the predefined width requirements for positioning within the recycling receptacle for recycling.

The battery guide system **122** guides the battery cell **102**, **104** into and out of the cutting operation performed by at least one of the battery lead tab cutting system **124** and the battery pouch cutting system **126**. Generally, the battery guide system **122** is movable from a first position, proximate the first table end **136**, to a second position for the cutting operation. In one example, the battery guide system **122** includes a battery guide flange **240**, a battery guide base **242**, at least one or a pair of guide arms **244** and a guide handle **246**. With reference to FIG. **4**, the battery guide flange **240** extends for a distance along the horizontal or X-axis that is sufficient to couple the battery guide flange **240** to the battery cell **102**, **104** between the lead tabs **106**, **108**. In one example, the battery guide flange **240** is substantially L-shaped, and has a guide lip **248** that extends axially outward from a flange base **250**. The flange base **250** extends along the Y-axis, and is sized to be positioned adjacent to the first end **102***b*, **104***b* of the battery cell **102**, **104**. The guide lip **248** extends outwardly from the flange base **250** at an end of the flange base **250** such that the guide lip **248** is coupled to or is in contact with a surface of the battery cell **102**, **104** when the battery cell **102**, **104** is coupled to the battery guide system **122**. By providing the guide lip **248** that extends over or on top of the surface of the battery cell **102**, **104** along with the flange base **250** that extends along the first end **102***b*, **104***b* of the battery cell **102**, **104**, the guide lip **248** and the flange base **250** assist in holding the battery cell **102**, **104** during the cutting operation. The battery guide flange **240** is generally coupled to the recycling table **120** such that an end of the flange base **250** opposite the guide lip **248** is in contact with or adjacent to the first table surface **132**.

The battery guide base **242** is coupled to the battery guide flange **240**. The battery guide base **242** is substantially rectangular, and is sized to be received within the guide slot **228** and the second guide slot **229**. The battery guide base

242 has a first base end 242*a* opposite a second base end 242*b*. The battery guide base 242 is coupled to the recycling table 120 such that a surface 242*c* of the battery guide base 242 is slightly raised above the first table surface 132. The battery guide flange 240 is coupled to the second base end 242*b*. With reference to FIG. 4, the battery guide base 242 includes two opposed rails 252. The opposed rails 252 generally extend along the Z-axis on opposed sides of the battery guide base 242 from the first base end 242*a* to the second base end 242*b*. The opposed rails 252 slidably engage with the second channels 224 of the second guide slot 229 when the battery guide base 242 is in a first position, and engage with the first channels 222 of the guide slot 228 when the battery guide base 242 is in the second position. The opposed rails 252 have a substantially square cross-section to be received within the respective first channels 222 and second channels 224. The battery guide base 242 provides stability to the movement of the battery guide system 122 relative to the recycling table 120.

The at least one or a pair of guide arms 244, in this example, comprises two guide arms 244*a*, 244*b*. The guide arms 244*a*, 244*b* are coupled to the second base end 242*b* at the surface 242*c* of the battery guide base 242. The guide arms 244*a*, 244*b* are coupled to the battery guide base 242 so as to be spaced apart from each other and proximate the sides of the battery guide base 242. The guide arms 244*a*, 244*b* are substantially planar, and rectangular in cross-section. The guide arms 244*a*, 244*b* have a length sized to enable a movement of the battery guide base 242 and the battery guide flange 240 from the first position (FIG. 2) to the second position (FIG. 4). In the second position, the battery cell 102, 104 coupled to the battery guide base 242 and the battery guide flange 240 is positioned for the cutting operation. In this example, the guide arms 244*a*, 244*b* are coupled together via a link 254 at an end opposite the respective end of the guide arms 244*a*, 244*b* coupled to the battery guide base 242. The link 254 ensures an equal or even movement of the guide arms 244*a*, 244*b*, and thus, the battery guide base 242 and the battery guide flange 240, relative to the recycling table 120. The respective end of the guide arms 244*a*, 244*b* proximate the link 254 are coupled to the guide handle 246.

The guide handle 246 is coupled to the guide arms 244*a*, 244*b* so as to be proximate the first table end 136 when the battery guide base 242 and the battery guide flange 240 are in the first position. The guide handle 246 is substantially U-shaped, however, any graspable member may be used to enable a user to move the battery guide base 242 and the battery guide flange 240 between the first position and the second position. In this example, the guide handle 246 is coupled to the guide arms 244*a*, 244*b* via welding, however, mechanical fasteners, adhesives, etc. may be used. In addition, the guide handle 246 may be integrally formed with the guide arms 244*a*, 244*b* via additive manufacturing, casting, etc. As will be discussed, generally, the user may grasp the guide handle 246 to push the battery guide system 122, and thus, the battery cell 102, 104, from the first position to the second position for the cutting operation. Once the cutting operation is complete, the operator may grasp the guide handle 246 and pull the battery guide system 122, and thus, the battery cell 102, 104 from the second position to the first position.

With reference back to FIG. 1, the battery lead tab cutting system 124 is controlled by the controller 130 to cut the lead tabs 106, 108 off of the battery cell 102, 104. By removing the lead tabs 106, 108, the lead tabs 106, 108 may be recycled. In addition, by removing the lead tabs 106, 108, the battery cell 102, 104 may also be recycled. The removal of the lead tabs 106, 108 also reduces a size of the battery cell 102, 104, which enables additional battery cells 102, 104 to be received within the recycling receptacle, such as a shipping container, for shipping the battery cells 102, 104 for recycling. In one example, the battery lead tab cutting system 124 includes a first actuator 260, the first tab cutting blade 262 and the second tab cutting blade 264. The first actuator 260 includes, but is not limited to, a linear actuator having a movable or translatable linear rod. The first actuator 260 may be an electric linear actuator or a pneumatic linear actuator. The first actuator 260 is in communication with the controller 130 over a communication media that facilitates the transfer of data, power, etc. In the instance of the first actuator 260 as a pneumatic linear actuator, the first actuator 260 may also be in communication with a source of pressurized air. In one example, the first actuator 260 is responsive to one or more control signals from the controller 130 to extend the linear rod and retract the linear rod in a single actuation cycle.

The first tab cutting blade 262 and the second tab cutting blade 264 are movable substantially simultaneously together with the first actuator 260. In one example, the first tab cutting blade 262 and the second tab cutting blade 264 are coupled together, via a supporting structure, such as a crossbar, which is coupled to the linear rod so that a movement of the linear rod of the first actuator 260 moves the first tab cutting blade 262 and the second tab cutting blade 264 substantially simultaneously relative to the recycling table 120. Stated another way, an actuation of the first actuator 260 by the controller 130 is configured to move the first tab cutting blade 262 and the second tab cutting blade 264 toward the recycling table 120 to cut the lead tabs 106, 108 from the battery cell 102, 104 and to retract the first tab cutting blade 262 and the second tab cutting blade 264 after the lead tabs 106, 108 are cut. The first actuator 260 is coupled to the recycling table 120 via one or more support structures or elevated platforms such that the first actuator 260 is operable in the actuation cycle to move the first tab cutting blade 262 and the second tab cutting blade 264 simultaneously to remove the lead tabs 106, 108 from the battery cell 102, 104 and retract the first tab cutting blade 262 and the second tab cutting blade 264. The first tab cutting blade 262 and the second tab cutting blade 264 are each composed of metal or metal alloy, and have a sharp tip 262*a*, 264*a* for cutting through the lead tabs 106, 108 to sever or separate the lead tabs 106, 108 from the battery cell 102, 104. Generally, the first tab cutting blade 262 and the second tab cutting blade 264 have a width along the Z-axis that is substantially different and larger than a width of the lead tabs 106, 108 to ensure that the first tab cutting blade 262 and the second tab cutting blade 264 remove an entirety of the respective lead tab 106, 108 in a single cut or actuation cycle of the first actuator 260.

The battery pouch cutting system 126 is controlled by the controller 130 to cut the pouch 110 off of the second battery cell 104. By removing the pouch 110, the size of the second battery cell 104 is reduced, which enables additional battery cells 102, 104 to be received within the recycling receptacle to ship the battery cells 102, 104 for recycling. It should be noted that the battery pouch cutting system 126 trims the pouch 110 of the second battery cell 104 without contacting the seal 112 (FIG. 1). The battery pouch cutting system 126 removes the pouch 110 proximate the seal 112, while leaving the seal 112 intact. In one example, the battery pouch cutting system 126 includes a second actuator 270 and a pouch cutting blade 272. The second actuator 270 includes, but is

not limited to, a linear actuator having a movable or translatable linear rod. The second actuator **270** may be an electric linear actuator or a pneumatic linear actuator. The second actuator **270** is in communication with the controller **130** over a communication media that facilitates the transfer of data, power, etc. In the instance of the second actuator **270** as a pneumatic linear actuator, the second actuator **270** may also be in communication with a source of pressurized air. In one example, the second actuator **270** is responsive to one or more control signals from the controller **130** to extend the linear rod and retract the linear rod in a single actuation cycle.

The pouch cutting blade **272** is movable by the second actuator **270**. In one example, the linear rod of the second actuator **270** is coupled to the pouch cutting blade **272** so that the second actuator **270** is configured to move the pouch cutting blade **272**. Stated another way, an actuation of the second actuator **270** by the controller **130** is configured to move the pouch cutting blade **272** toward the recycling table **120** to cut the pouch **110** from the second battery cell **104** and to retract the pouch cutting blade **272** after the pouch **110** is cut. The second actuator **270** is coupled to the recycling table **120** via one or more support structures or elevated platforms such that the second actuator **270** is operable in the actuation cycle to move the pouch cutting blade **272** to remove the pouch **110** from the second battery cell **104** and to retract the pouch cutting blade **272**. The pouch cutting blade **272** is composed of metal or metal alloy, and has a sharp tip **272***a* for cutting through the pouch **110** to sever or separate the pouch **110** from the second battery cell **104**. The pouch cutting blade **272** has a length along the X-axis that is substantially different and larger than a length of the second battery cell **104** along the X-axis to ensure that the pouch cutting blade **272** removes an entirety of the pouch **110** in a single cut or actuation cycle of the second actuator **270**. Generally, the pouch cutting blade **272** extends along an axis, which is substantially perpendicular to a respective axis along which the first tab cutting blade **262** and the second tab cutting blade **264** extend. It should be noted that while the battery lead tab cutting system **124** and the battery pouch cutting system **126** are described herein as each comprising a respective actuator, other arrangements may be used.

As the battery cell **102**, **104** may be a live battery cell **102**, **104**, each of the first tab cutting blade **262**, the second tab cutting blade **264** and the pouch cutting blade **272** are coupled to the respective actuator **260**, **270** and the recycling table **120** so as to be electrically isolated from each other. Thus, in certain instances, the first tab cutting blade **262** and the second tab cutting blade **264** may be coupled to the crossbar or support structure so as to be electrically isolated from each other, and electrically isolated from the first actuator **260**. The pouch cutting blade **272** may be coupled to a support structure so as to be electrically isolated from the first tab cutting blade **262** and the second tab cutting blade **264**, and the second actuator **270**. It should be noted that in certain examples, a single support structure may be used for the first tab cutting blade **262**, the second tab cutting blade **264** and the pouch cutting blade **272** so long as each of the first tab cutting blade **262**, the second tab cutting blade **264** and the pouch cutting blade **272** are electrically isolated from each other.

The human-machine interface **128** is in communication with the controller **130** over a communication medium that facilitates the transfer of power, data, etc., such as a bus. In one example, the human-machine interface **128** includes a housing **280** and a plurality of buttons **282**. The housing **280** is coupled to the recycling table **120** on the first table surface **132** so as to be outside of the light curtain of the safety system **144**. This enables the operator to interface with the human-machine interface **128** without interfering with or crossing the light curtain of the safety system **144**. In this example, the plurality of buttons **282** include three buttons **282***a*-**282***c*. The buttons **282***a*-**282***c* are movable relative to the housing **280** to generate a signal, which is communicated to the controller **130**. In this example, the button **282***a* is depressible or responsive to input by the operator to reset the light curtain or reset the safety system **144**. The button **282***b* is depressible or responsive to input by the operator to actuate the first actuator **260** of the battery lead tab cutting system **124** to cut the lead tabs **106**, **108** (in the example of the first battery cell **102**). The button **282***c* is depressible or responsive to input by the operator to actuate the first actuator **260** of the battery lead tab cutting system **124** to cut the lead tabs **106**, **108** and to actuate the second actuator **270** of the battery pouch cutting system **126** to cut the pouch **110** (in the example of the second battery cell **104**).

The controller **130** includes at least one processor **290** and a computer-readable storage device or media **292**. The processor **290** may be any custom-made or commercially available processor, a central processing unit (CPU), a graphics processing unit (GPU), an application specific integrated circuit (ASIC) (e.g., a custom ASIC implementing a neural network), a field programmable gate array (FPGA), an auxiliary processor among several processors associated with the controller **130**, a semiconductor-based microprocessor (in the form of a microchip or chip set), any combination thereof, or generally any device for executing instructions. The computer readable storage device or media **292** may include volatile and nonvolatile storage in read-only memory (ROM), random-access memory (RAM), and keep-alive memory (KAM), for example. KAM is a persistent or non-volatile memory that may be used to store various operating variables while the processor **290** is powered down. The computer-readable storage device or media **292** may be implemented using any of a number of known memory devices such as PROMs (programmable read-only memory), EPROMs (electrically PROM), EEPROMs (electrically erasable PROM), flash memory, or any other electric, magnetic, optical, or combination memory devices capable of storing data, some of which represent executable instructions, used by the controller **130** in controlling the battery cell recycling system **100**. Although only one controller **130** is shown in FIG. **1**, embodiments of the battery cell recycling system **100** can include any number of controllers **130** that communicate over any suitable communication medium or a combination of communication mediums and that cooperate to process the sensor signals, perform logic, calculations, methods, and/or algorithms, and generate control signals to automatically control features of the battery cell recycling system **100**.

For example, as shown in more detail with regard to FIG. **5** and with continued reference to FIGS. **1**-**4**, a dataflow diagram illustrates various embodiments of a control system of the battery cell recycling system **100**, which may be embedded within the controller **130**. Various embodiments of the control system of the battery cell recycling system **100** according to the present disclosure can include any number of sub-modules embedded within the controller **130**. As can be appreciated, the sub-modules shown in FIG. **5** can be combined and/or further partitioned to similarly cut at least one of the lead tabs **106**, **108** and the pouch **110**. Inputs to the battery cell recycling system **100** may be received from the safety system **144** (FIG. **1**), received from the human-

machine interface **128** (FIG. **1**), received from other control modules (not shown) associated with the battery cell recycling system **100**, and/or determined/modeled by other submodules (not shown) within the controller **130**. In various embodiments, the battery cell recycling system **100** includes a human-machine interface manager module **302**, a safety control module **304**, a lead tab cutting control module **306** and a pouch cutting control module **308**.

The human-machine interface (HMI) manager module **302** receives user input data **310** from the human-machine interface **128**. The HMI manager module **302** processes the user input data **310** and determines whether input has been received from one of the buttons **282***a*-**282***c*. If user input has been received to the button **282***a* to reset the safety system **144**, the HMI manager module **302** outputs reset data **312** to the safety control module **304**. The reset data **312** is data to reset the safety system **144** from the alert state to the active state. If user input has been received to the button **282***b* to cut the lead tabs **106**, **108** associated with the first battery cell **102**, for example, the HMI manager module **302** outputs tab cut data **314** to the lead tab cutting control module **306**. The tab cut data **314** is one or more control signals to the first actuator **260** to cycle or extend and retract the linear rod to cut the lead tabs **106**, **108** off of the battery cell **102**, **104**. If user input has been received to the button **282***c* to cut the lead tabs **106**, **108** and the pouch **110** associated with the second battery cell **104**, for example, the HMI manager module **302** outputs the tab cut data **314** to the lead tab cutting control module **306** and pouch cut data **316** to the pouch cutting control module **308**. The pouch cut data **316** is one or more control signals to the second actuator **270** to cycle or extend and retract the linear rod to cut the pouch **110** off of the second battery cell **104**.

The safety control module **304** receives as input the reset data **312**. Based on the reset data **312**, if the safety system **144** is in the alert state, the safety control module **304** outputs transmitter data **318**. The transmitter data **318** is data to the transmitter bar **160** of the safety system **144** to reset to the active state, and to transmit the light beams to the receiver bar **162**. The safety control module **304** also receives as input receiver data **320**. The receiver data **320** is data from the safety system **144** that indicates that the light has not been detected by the receiver bar **162** such that the safety system **144** is in an alert state. Based on the receiver data **320**, the safety control module **304** sets alert data **322** for the lead tab cutting control module **306** and the pouch cutting control module **308**. The alert data **322** is data that indicates the safety system **144** is in the alert state, and in this example, the light is not detected by the receiver bar **162** such that the operator has crossed the safety system **144** or the light curtain.

The lead tab cutting control module **306** receives as input the tab cut data **314**. Based on the tab cut data **314**, the lead tab cutting control module **306** determines whether alert data **322** has been received that indicates the safety system **144** is in the alert state. If the alert data **322** has not been received, the lead tab cutting control module **306** outputs tab cut cycle data **324**. The tab cut cycle data **324** is one or more control signals to the first actuator **260** to cycle or extend and retract the linear rod to cut the lead tabs **106**, **108** from the battery cell **102**, **104** with the first tab cutting blade **262** and the second tab cutting blade **264**. If the alert data **322** has been received, the lead tab cutting control module **306** inhibits a motion of the first actuator **260** and does not output the tab cut cycle data **324**.

The pouch cutting control module **308** receives as input the pouch cut data **316**. Based on the pouch cut data **316**, the pouch cutting control module **308** determines whether alert data **322** has been received that indicates the safety system **144** is in the alert state. If the alert data **322** has not been received, the pouch cutting control module **308** outputs pouch cut cycle data **326**. The pouch cut cycle data **326** is one or more control signals to the second actuator **270** to cycle or extend and retract the linear rod to cut the pouch **110** from the second battery cell **104** with the pouch cutting blade **272**. If the alert data **322** has been received, the pouch cutting control module **308** inhibits a motion of the second actuator **270** and does not output the pouch cut cycle data **326**. Based on the output of the pouch cut cycle data **326**, the pouch cutting control module **308** also outputs guide bar cycle data **327**. The guide bar cycle data **327** is one or more control signals to the guide actuator **234** to cycle or retract and extend the linear rod to move the movable guide bar **233** to enable the pouch **110** to enter into the collection bin **172***c*. It should be noted that in certain instances, the output of the guide bar cycle data **327** may be after a predetermined period of time from the output of the pouch cut cycle data **326**, if desired.

Referring now to FIG. **6**, and with continued reference to FIGS. **1**-**5**, a flowchart illustrates a method **400** that can be performed by the battery cell recycling system **100** of FIG. **1** in accordance with the present disclosure. In one example, the method **400** is performed by the processor **290** of the controller **130**. As can be appreciated in light of the disclosure, the order of operation within the method **400** is not limited to the sequential execution as illustrated in FIG. **6**, but may be performed in one or more varying orders as applicable and in accordance with the present disclosure. In various embodiments, the method **400** can be scheduled to run based on one or more predetermined events, and/or may run continuously during operation of the battery cell recycling system **100**.

The method **400** begins at **402**. At **404**, the method **400** determines whether user input has been received to the human-machine interface **128**. If true, the method **400** proceeds to **406**. Otherwise, the method **400** loops.

At **406**, the method **400** determines whether the user input received was to the button **282***a*, or whether the user input is a request to reset the safety system **144**. If true, the method **400** proceeds to **408**. At **408**, the method **400** receives the receiver data **320** from the safety system **144**. At **410**, the method **400** determines whether the safety system **144** is in the alert state based on the receiver data **320**. If the safety system **144** is in the alert state, the method **400** proceeds to **412**. At **412**, the method **400** outputs the transmitter data **318** to reset the safety system **144** such that the transmitter bar **160** of the light curtain transmits the light to the receiver bar **162**. The method **400** loops to **410**.

At **414**, the method **400** determines whether input was received to cut the lead tabs **106**, **108**, or if input was received to the button **282***b*. If true, the method **400** proceeds to **416**. Otherwise, the method **400** proceeds to **417**. At **416**, the method **400** receives the receiver data **320** from the safety system **144**. At **418**, the method **400** determines whether the safety system **144** is in the alert state based on the receiver data **320**. If the safety system **144** is in the alert state, the method **400** ends at **420**. If the safety system **144** is not in the alert state at **418**, the method **400**, at **422**, outputs one or more control signals to the first actuator **260** to cycle or extend and retract the linear rod to move the tab cutting blades **262**, **264** to sever the lead tabs **106**, **108** from the battery cell **102**, **104**. The method **400** ends at **420**.

At **417**, the method **400** determines whether input was received to cut the lead tabs **106**, **108** and the pouch **110**, or

if input was received to the button **282***c*. If true, the method **400** proceeds to **424**. Otherwise, the method **400** ends at **420**. At **424**, the method **400** receives the receiver data **320** from the safety system **144**. At **426**, the method **400** determines whether the safety system **144** is in the alert state based on the receiver data **320**. If the safety system **144** is in the alert state, the method **400** ends at **420**. If the safety system **144** is not in the alert state at **426**, the method **400**, at **428**, outputs one or more control signals to the first actuator **260** to cycle or extend and retract the linear rod to move the tab cutting blades **262**, **264** to sever the lead tabs **106**, **108** from the second battery cell **104**. At **430**, the method **400** outputs one or more control signals to the second actuator **270** to cycle or extend and retract the linear rod to move the pouch cutting blade **272** to sever the pouch **110** from the second battery cell **104**. At **432**, the method **400** outputs one or more control signals to the guide actuator **234** to cycle or retract and extend the linear rod to move the movable guide bar **233** to drop the pouch **110** into the collection bin **172***c*. The method **400** ends at **420**.

Thus, generally, in order to use the battery cell recycling system **100**, with reference to FIG. **2**A, the operator loads the battery cell **102**, **104** onto the battery guide base **242** such that the first end **102***b*, **104***b* of the battery cell **102**, **104** is disposed under the guide lip **248** of the battery guide flange **240** (FIG. **4**). In the example of the first battery cell **102**, the operator grasps the handle **180** (FIG. **3**), and rotates the handle **180**, and thus, the shaft **190** about 180 degrees toward the first table end **136**, toward the user or counterclockwise. The rotation of the shaft **190** rotates the folding arm **182**. As the folding arm **182** rotates, the lip **196***a* contacts the pouch **110**, and the continued rotation of the folding arm **182** moves the pouch **110** toward the operator, thereby folding the pouch **110** over the first battery cell **102**, as shown in FIG. **9**. With reference to FIGS. **2**A and **9**, with the pouch **110** folded over the first battery cell **102** and held in place by the folding arm **182**, the operator may dispense the adhesive tape for the predetermined length identified by the marking **157**. The adhesive tape may be applied to the pouch **110** and the first battery cell **102** to secure the folded pouch **110** to the first battery cell **102**. The operator may then rotate the handle **180** clockwise to move the folding arm **182** back to the first position.

The operator grasps the guide handle **246**, and uses the guide handle **246** to advance or push the battery guide flange **240**, the battery guide base **242**, and thus, the battery cell **102**, **104** from the first position (FIG. **2**A) to the second position for the cutting operation (FIG. **7**). In the example of the second battery cell **104**, as the second battery cell **104** is pushed into the second position for the cutting operation, the pouch **110** follows the incline of the ramp surfaces **220**, which assists in directing the pouch **110** through the guide slots **226***a* and over the collection slot **170***c*. In the example of the first battery cell **102**, as the first battery cell **102** is pushed into the second position for the cutting operation, the first portion **101** follows the incline of the ramp surfaces **220**. With the battery cell **102**, **104** in the second position, with reference to FIG. **4**, the operator grasps the second handle **202** of the blocking arm system **184** and pushes the second handle **202** toward the first table surface **132** to rotate the block arms **204** from the first position (FIG. **4**) to the second position (FIG. **7**).

With reference to FIG. **7**, the block arms **204** are shown in the second position. The battery cell **102**, **104** is shown positioned for the cutting operation. In the example of FIG. **7**, the second battery cell **104** is illustrated, however, the first battery cell **102** would be positioned substantially the same as the second battery cell **104**. With reference to FIG. **8**, in the second position for the cutting operation, in the example of the second battery cell **104**, the pouch **110** extends over the collection slot **170***c* and rests on the second guide bar assembly **227**. With the battery cell **102**, **104** in the second position, and the operator out of the light emitted by the transmitter bar **160**, the operator presses the button **282***a* to reset the safety system **144**. In the example of the second battery cell **104**, the operator then presses the button **282***c* to actuate the first actuator **260** to cycle the tab cutting blade **262**, **264** to cut the lead tabs **106**, **108**; and to actuate the second actuator **270** cycle the pouch cutting blade **272** to cut the pouch **110**. In the example of the first battery cell **102**, the operator then presses the button **282***b* to actuate the first actuator **260** to cycle the tab cutting blade **262**, **264** to cut the lead tabs **106**, **108**. The operator may remove the second battery cell **104**, and position the second battery cell **104** for shipping and recycling. The operator may remove the first battery cell **102** with the folded pouch **110**, and position the first battery cell **102** within the verification gauge **151** as shown in FIG. **2** to ensure that the first battery cell **102** with the folded pouch **110** has the predetermined width W**1** for shipping for recycling. Once the first battery cell **102** has the predetermined width W**1**, the first battery cell **102** can be positioned for shipping and recycling.

Thus, the battery cell recycling system **100** enables an operator to remove the lead tabs **106**, **108** associated with the battery cell **102**, **104** for separate recycling without requiring manual cutting of the lead tabs **106**, **108**. The use of the battery cell recycling system **100** increases cycle time, by eliminating manual cutting of the lead tabs **106**, **108**, while also providing repeatability and consistency in the battery cell **102**, **104** that are received for recycling. The battery cell recycling system **100** also enables the operator to prepare the battery cell **102**, **104** for shipping for recycling by either taping the pouch **110** to reduce the size of the first battery cell **102** or by cutting the pouch **110** to reduce the size of the second battery cell **104**. The reduced size of the battery cell **102**, **104** enables a larger quantity of the battery cells **102**, **104** to be received within the recycling receptacle, such as a shipping container, and thus, is more efficient for recycling of the battery cells **102**, **104**.

While at least one exemplary embodiment has been presented in the foregoing detailed description, it should be appreciated that a vast number of variations exist. It should also be appreciated that the exemplary embodiment or exemplary embodiments are only examples, and are not intended to limit the scope, applicability, or configuration of the disclosure in any way. Rather, the foregoing detailed description will provide those skilled in the art with a convenient road map for implementing the exemplary embodiment or exemplary embodiments. It should be understood that various changes can be made in the function and arrangement of elements without departing from the scope of the disclosure as set forth in the appended claims and the legal equivalents thereof.

What is claimed is:

1. A battery cell recycling system, comprising:

a recycling table having a first table surface opposite a second table surface, the recycling table including at least one collection slot defined through the first table surface and the second table surface, and at least one collection bin coupled to the second table surface in communication with the at least one collection slot;

a battery guide system coupled to the recycling table, the battery guide system configured to receive a battery cell including a first lead tab, a second lead tab and a pouch,

the battery guide system movable between a first position and a second position, and in the second position, at least one of the first lead tab, the second lead tab and the pouch is disposed over the at least one collection slot;

at least one actuator configured to move, in response to a controller, at least one cutting blade to remove at least one of the first lead tab, the second lead tab and the pouch from the battery cell in the second position of the battery guide system such that the at least one of the first lead tab, the second lead tab and the pouch is received in the at least one collection bin; and

a safety system disposed proximate the battery guide system configured to observe whether a user has crossed the safety system and to generate signals based on the observation;

wherein the controller has a processor and is configured to:

receive the signals from the safety system that indicate the user has crossed the safety system; and

inhibit a motion of the at least one actuator based on the signals.

2. The battery cell recycling system of claim **1**, wherein the safety system includes a light curtain.

3. The battery cell recycling system of claim **1**, wherein the safety system includes a transmitter bar and a receiver bar disposed on opposite sides of the battery guide system from one another.

4. The battery cell recycling system of claim **1**, further comprising a human-machine interface in communication with the controller, and the human-machine interface is configured to receive input from the user to reset the safety system and to actuate the at least one actuator.

5. The battery cell recycling system of claim **4**, wherein based on the input from the user to reset the safety system and to actuate the at least one actuator, the controller is configured to output one or more control signals to the at least one actuator to move the at least one cutting blade.

6. The battery cell recycling system of claim **1**, wherein the at least one collection slot further comprises a plurality of collection slots defined through the recycling table from the first table surface to the second table surface, the at least one collection bin comprises a plurality of collection bins, and each of the plurality of collection slots is in communication with a respective one of the plurality of collection bins.

7. The battery cell recycling system of claim **1**, wherein the at least one cutting blade comprises a first tab cutting blade, a second tab cutting blade and a pouch cutting blade, each of the first tab cutting blade and the second tab cutting blade are configured to remove a respective one of the first lead tab and the second lead tab, and the pouch cutting blade is configured to remove the pouch.

8. The battery cell recycling system of claim **1**, further comprising a tape dispenser coupled to the recycling table.

9. The battery cell recycling system of claim **1**, further comprising a folding arm coupled to the recycling table and movable relative to the recycling table to fold the pouch over the battery cell.

10. The battery cell recycling system of claim **1**, further comprising at least one ramp surface configured to contact the pouch and guide the pouch as the battery guide system moves between the first position and the second position.

11. A method for battery cell recycling, comprising:

providing a recycling table having a first table surface opposite a second table surface, the recycling table including at least one collection slot defined through the first table surface and the second table surface and at least one collection bin coupled to the second table surface in communication with the at least one collection slot, the recycling table including a safety system coupled to the recycling table configured to observe whether a user has crossed the safety system and to generate signals based on the observation;

receiving, by a processor, user input to cut at least one of a first lead tab, a second lead tab and a pouch associated with a battery cell;

receiving, by the processor, the signals from the safety system; and

outputting one or more control signals, by the processor, to at least one actuator to move at least one cutting blade to remove at least one of the first lead tab, the second lead tab and the pouch associated with the battery cell such that the at least one of the first lead tab, the second lead tab and the pouch is received in the at least one collection bin based on the signals from the safety system.

12. The method of claim **11**, wherein based on the signals from the safety system, the method includes inhibiting a movement of the at least one cutting blade by the at least one actuator.

13. The method of claim **11**, wherein the at least one collection slot comprises a plurality of collection slots, the at least one collection bin comprises a plurality of collection bins, each of the plurality of collection bins is associated with a respective one of the plurality of collection slots, and receiving the user input to cut the at least one of the first lead tab, the second lead tab and the pouch associated with the battery cell further comprises:

receiving, by the processor, user input to cut the first lead tab and the second lead tab; and

outputting the one or more control signals, by the processor, to the at least one actuator to move a first tab cutting blade and a second tab cutting blade to remove the first lead tab and the second lead tab such that the first lead tab is received in one of the plurality of collection bins and the second lead tab is received in a second one of the plurality of collection bins based on the signals from the safety system.

14. The method of claim **11**, wherein the at least one collection slot comprises a plurality of collection slots, the at least one collection bin comprises a plurality of collection bins, each of the plurality of collection bins is associated with a respective one of the plurality of collection slots, and receiving the user input to cut the at least one of the first lead tab, the second lead tab and the pouch associated with the battery cell further comprises:

receiving, by the processor, user input to cut the first lead tab, the second lead tab and the pouch;

outputting one or more control signals, by the processor, to a first actuator to move a first tab cutting blade and a second tab cutting blade to remove the first lead tab and the second lead tab such that the first lead tab is received in one of the plurality of collection bins and the second lead tab is received in a second one of the plurality of collection bins based on the signals from the safety system; and

outputting one or more control signals, by the processor, to a second actuator to move a pouch cutting blade to remove the pouch such that the pouch is received in a third one of the plurality of collection bins based on the signals from the safety system.

15. A battery cell recycling system, comprising:

a recycling table having a first table surface opposite a second table surface, the recycling table including a plurality of collection slots defined through the first table surface and the second table surface, a plurality of collection bins coupled to the second table surface in communication with a respective one of the plurality of collection slots and a safety system disposed proximate a first table end of the recycling table, the safety system configured to observe whether a user has crossed the safety system and to generate signals based on the observation;

a battery guide system coupled to the recycling table, the battery guide system configured to receive a battery cell including a first lead tab, a second lead tab and a pouch, the battery guide system movable between a first position and a second position, and in the second position, the first lead tab, the second lead tab and the pouch are disposed over a respective one of the plurality of collection slots;

a controller, having a processor, configured to:

receive the signals from the safety system; and

output one or more control signals to at least one actuator based on the signals from the safety system, the at least one actuator configured to move at least one cutting blade to remove at least one of the first lead tab, the second lead tab and the pouch from the battery cell in the second position of the battery guide system such that the at least one of the first lead tab, the second lead tab and the pouch is received in the respective one of the plurality of collection bins.

16. The battery cell recycling system of claim **15**, further comprising a human-machine interface in communication with the controller, and the human-machine interface is configured to receive input from the user to reset the safety system and to actuate the at least one actuator.

17. The battery cell recycling system of claim **16**, wherein based on the input from the user to reset the safety system and to actuate the at least one actuator, the controller is configured to output the one or more control signals to the at least one actuator to move the at least one cutting blade.

18. The battery cell recycling system of claim **15**, wherein the at least one cutting blade comprises a first tab cutting blade, a second tab cutting blade and a pouch cutting blade that are electrically isolated from each other, each of the first tab cutting blade and the second tab cutting blade are configured to remove a respective one of the first lead tab and the second lead tab, and the pouch cutting blade is configured to remove the pouch.

19. The battery cell recycling system of claim **15**, further comprising a tape dispenser coupled to the recycling table and a folding arm coupled to the recycling table and movable relative to the recycling table to fold the pouch over the battery cell.

20. The battery cell recycling system of claim **15**, further comprising at least one ramp surface configured to contact the pouch and guide the pouch as the battery guide system moves between the first position and the second position.

* * * * *