US012408299B2

(12) **United States Patent**
Li et al.

(10) **Patent No.: US 12,408,299 B2**
(45) **Date of Patent: Sep. 2, 2025**

(54) **IMMERSION COOLING SYSTEM AND ELECTRONIC APPARATUS HAVING THE SAME AND PRESSURE ADJUSTING MODULE**

(71) Applicant: **Wiwynn Corporation**, New Taipei (TW)

(72) Inventors: **Tsung-Han Li**, New Taipei (TW); **Chin-Han Chan**, New Taipei (TW); **Yi Cheng**, New Taipei (TW); **Ting-Yu Pai**, New Taipei (TW)

(73) Assignee: **Wiwynn Corporation**, New Taipei (TW)

(*) Notice: Subject to any disclaimer, the term of this patent is extended or adjusted under 35 U.S.C. 154(b) by 229 days.

(21) Appl. No.: **17/393,418**

(22) Filed: **Aug. 4, 2021**

(65) **Prior Publication Data**

US 2022/0361358 A1 Nov. 10, 2022

(30) **Foreign Application Priority Data**

May 7, 2021 (TW) 110116495

(51) **Int. Cl.**
H05K 7/00 (2006.01)
F28F 27/02 (2006.01)
(Continued)

(52) **U.S. Cl.**
CPC ***H05K 7/203*** (2013.01); ***F28F 27/02*** (2013.01); ***H05K 7/20*** (2013.01); ***H05K 7/20318*** (2013.01);
(Continued)

(58) **Field of Classification Search**
CPC H05K 7/203; H05K 7/20; H05K 7/20318; H05K 7/20327; H05K 7/20381; H05K 7/208; H05K 7/20236; F28F 27/02
See application file for complete search history.

(56) **References Cited**

U.S. PATENT DOCUMENTS

5,646,824 A 7/1997 Ohashi et al.
9,844,166 B2 12/2017 Shelnutt et al.
(Continued)

FOREIGN PATENT DOCUMENTS

CN 105491849 4/2016
CN 105607715 7/2019
(Continued)

OTHER PUBLICATIONS

"Office Action of Taiwan Counterpart Application", issued on Aug. 2, 2022, p. 1-p. 19.
(Continued)

Primary Examiner — Travis Ruby
(74) *Attorney, Agent, or Firm* — JCIPRNET

(57) **ABSTRACT**

An immersion cooling system includes a box body, a condensing structure and a pressure adjusting module. The box body has a first containing space, the first containing space is adapted to contain a heat dissipation medium, and at least one heat generating component is disposed in the first containing space to be immersed in the heat dissipation medium which is in liquid state. The condensing structure is disposed in the first containing space and above the heat dissipation medium which is in liquid state. The pressure adjusting module is adapted to actively drive a fluid in the first containing space to flow into the second containing space, such that a pressure in the first containing space is reduced to be less than an external pressure. In addition, an electronic apparatus having the immersion cooling system and a pressure adjusting module are also provided.

6 Claims, 10 Drawing Sheets

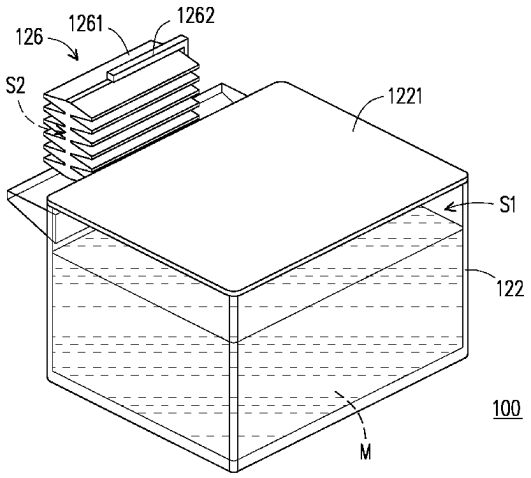

(51) **Int. Cl.**
H05K 7/20 (2006.01)
G06F 1/20 (2006.01)

(52) **U.S. Cl.**
CPC ***H05K 7/20327*** (2013.01); ***H05K 7/208*** (2013.01); *G06F 1/20* (2013.01)

(56) **References Cited**

U.S. PATENT DOCUMENTS

10,966,349	B1 *	3/2021	Lau	H05K 7/20236
2008/0302115	A1 *	12/2008	Eknes	H05K 7/20236 62/183
2015/0060009	A1 *	3/2015	Shelnutt	H05K 7/20809 165/11.1
2017/0064862	A1 *	3/2017	Miyoshi	H01L 23/32
2017/0295670	A1 *	10/2017	Campbell	H05K 7/20236
2017/0325355	A1 *	11/2017	Lau	H05K 7/20381
2018/0020570	A1 *	1/2018	Fujiwara	H05K 7/20318
2018/0042138	A1 *	2/2018	Campbell	H05K 7/203
2018/0084670	A1 *	3/2018	Hirai	H05K 7/20272
2020/0158443	A1 *	5/2020	Tung	H05K 7/20327
2020/0211925	A1 *	7/2020	Sato	G03B 21/16
2020/0389997	A1 *	12/2020	Tung	H05K 7/203
2021/0120705	A1 *	4/2021	Enright	H05K 7/203
2021/0148643	A1 *	5/2021	Tung	F28D 15/02
2022/0159875	A1 *	5/2022	Tuma	H05K 7/203
2022/0159876	A1 *	5/2022	Tung	H05K 7/20381
2022/0256744	A1 *	8/2022	Le	H05K 7/20318
2022/0322577	A1 *	10/2022	Bauchart	B66D 3/04

FOREIGN PATENT DOCUMENTS

CN	210840499	6/2020
WO	2007098477	8/2007
WO	2020170079	8/2020

OTHER PUBLICATIONS

"Office Action of China Counterpart Application", issued on Jun. 27, 2025, p. 1-p. 9.

* cited by examiner

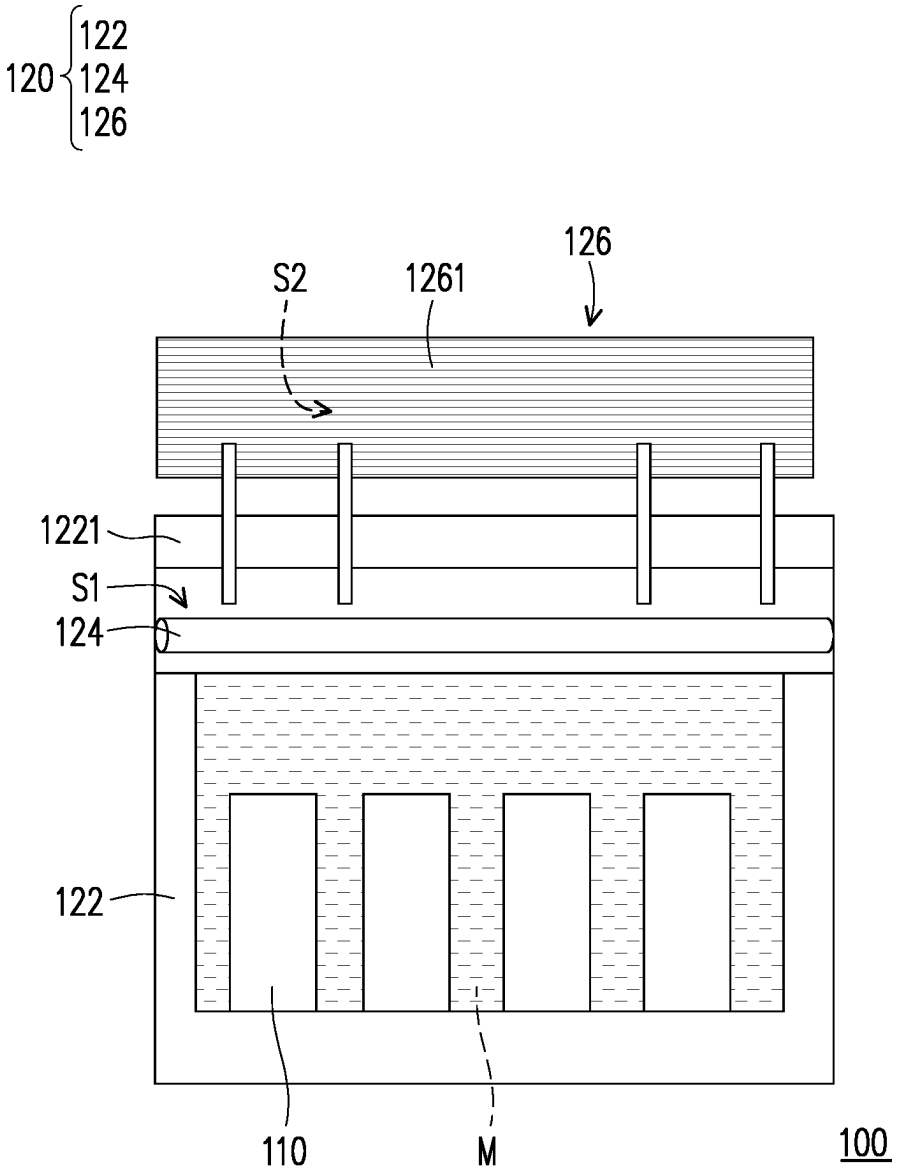

FIG. 1

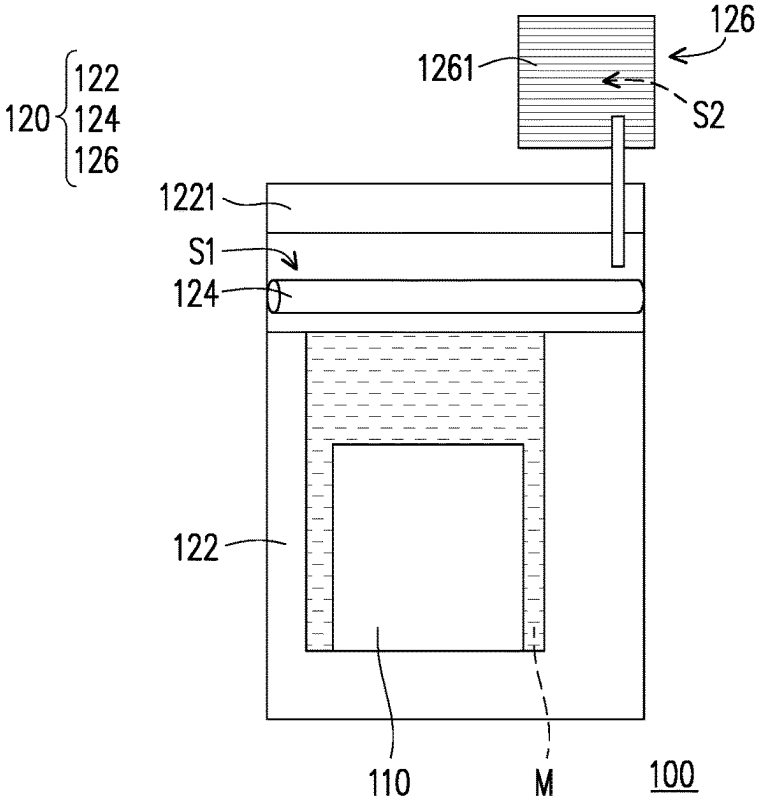
126
1261
S2
120
122
124
126
1221
S1
124
122
110
M
100

FIG. 2

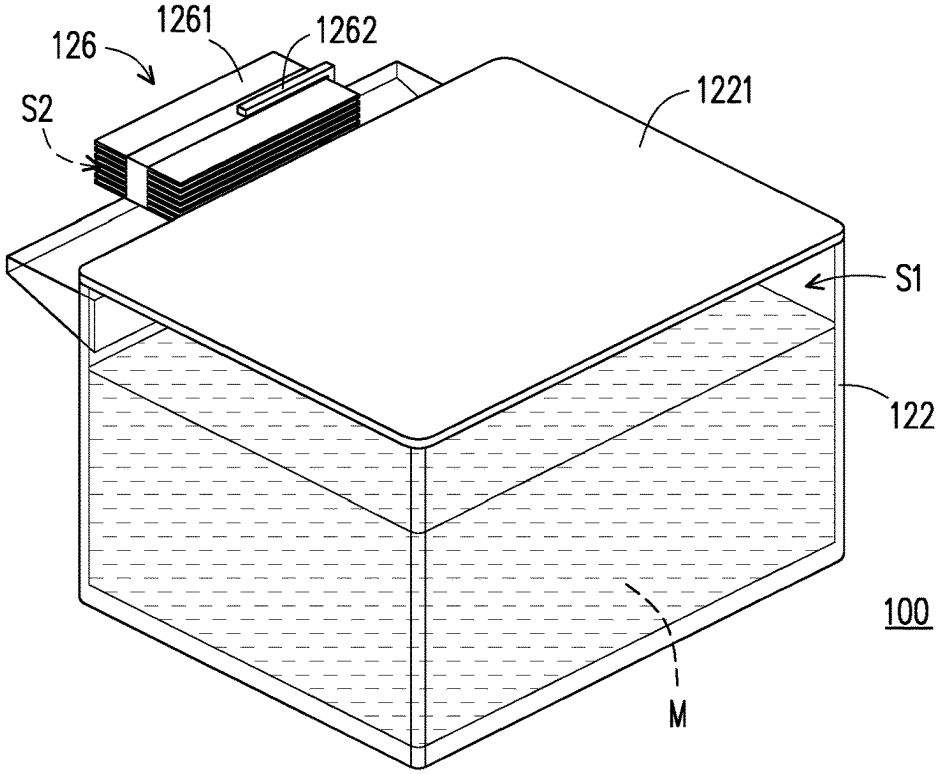
1261
1262
126
S2
1221
S1
122
100
M

FIG. 3

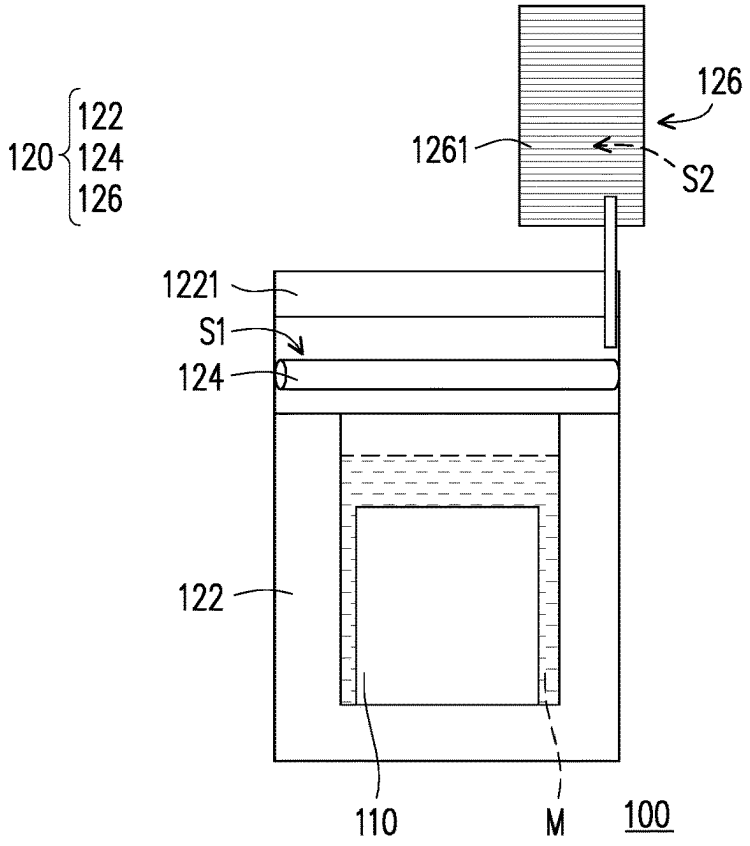
120
122
124
126
126
1261
S2
1221
S1
124
122
110
M
100

FIG. 4

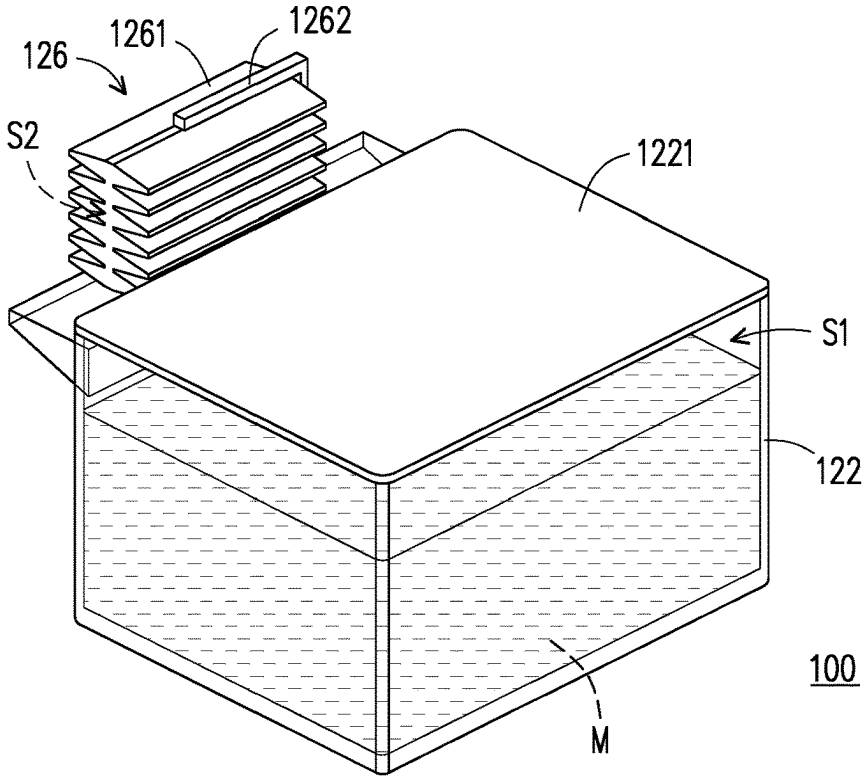
126
1261
1262
S2
1221
S1
122
100
M

FIG. 5

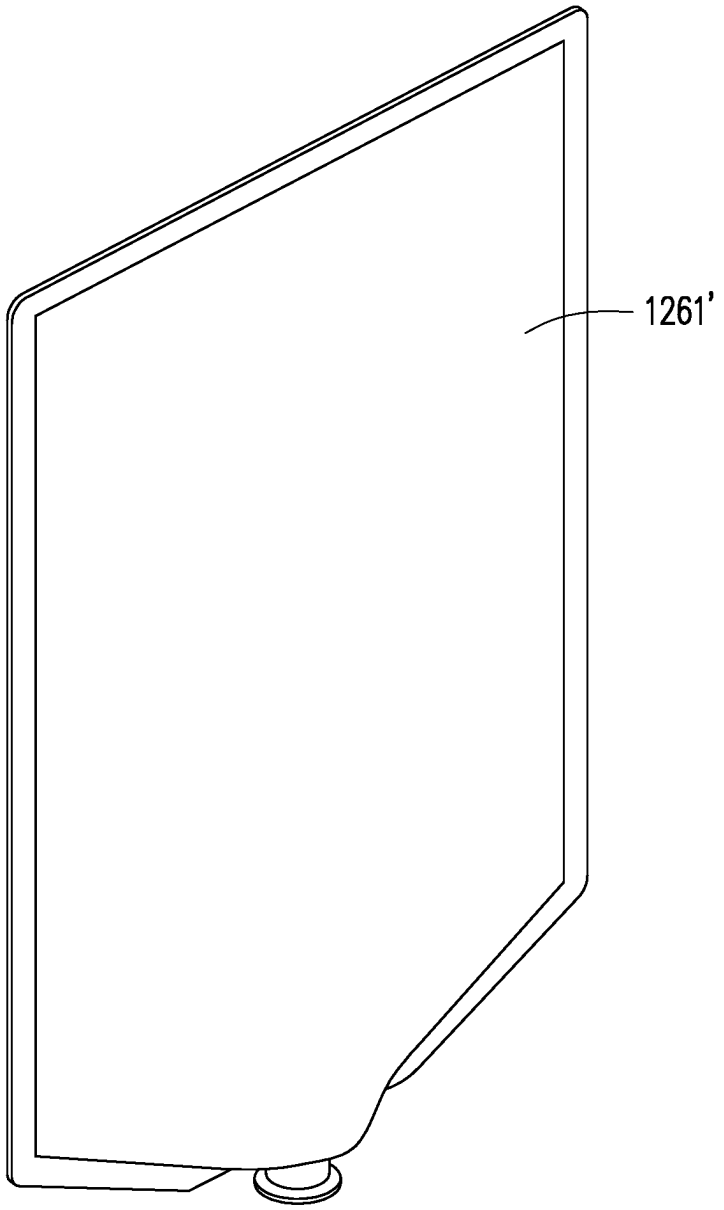

FIG. 6

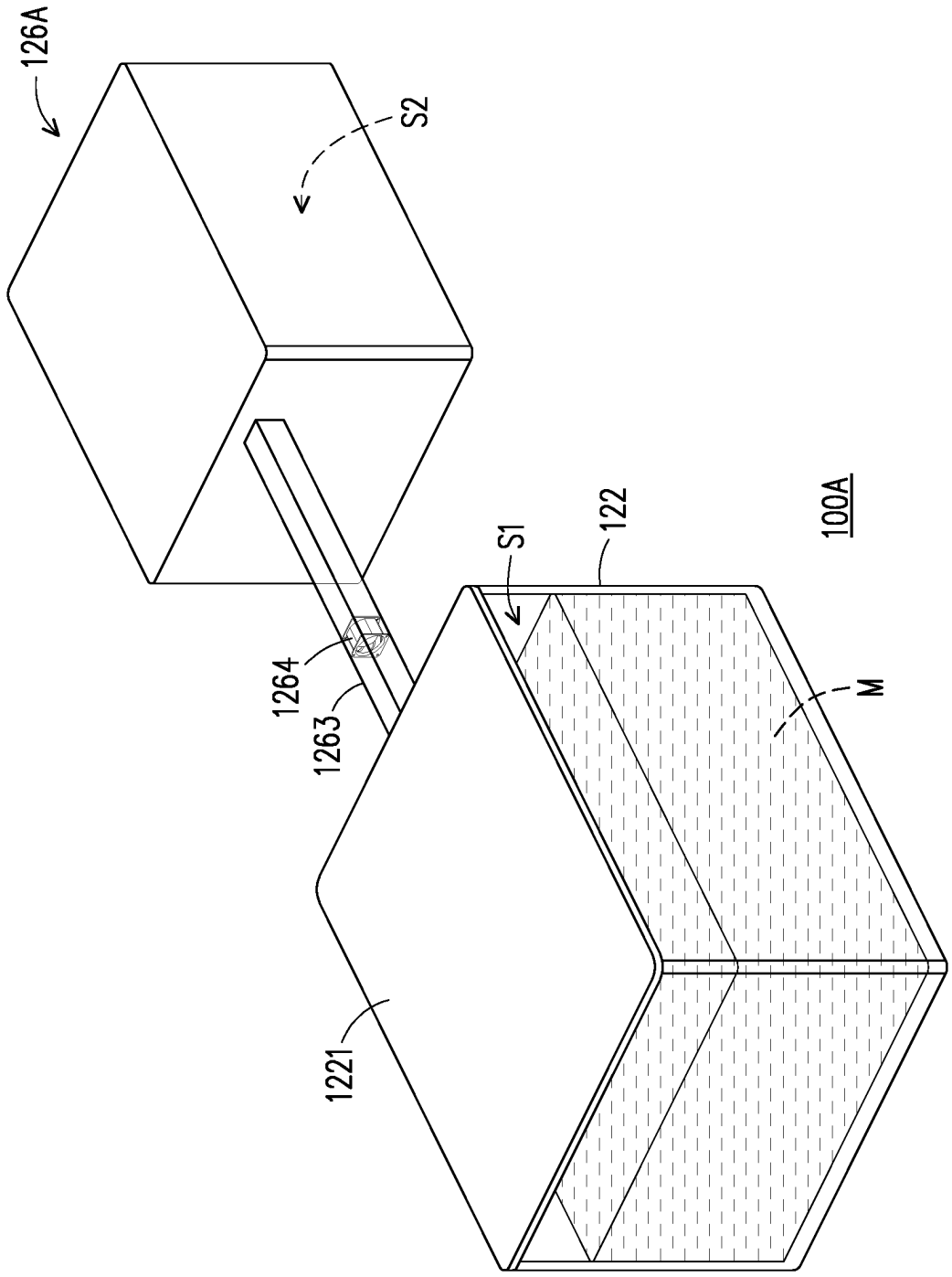

FIG. 7

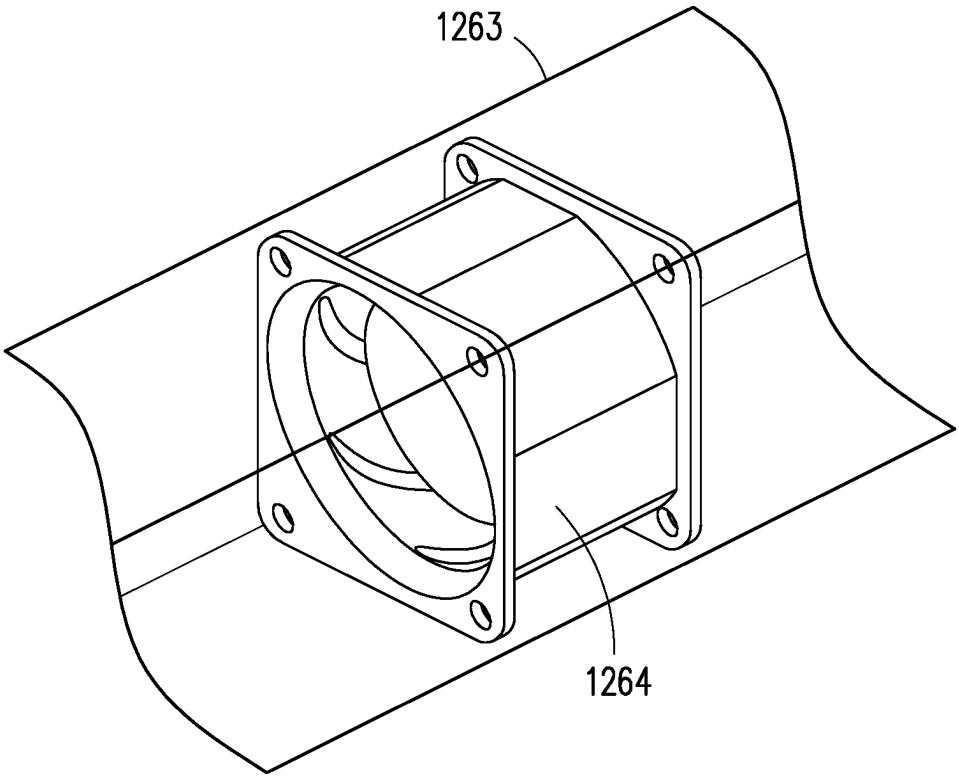

FIG. 8

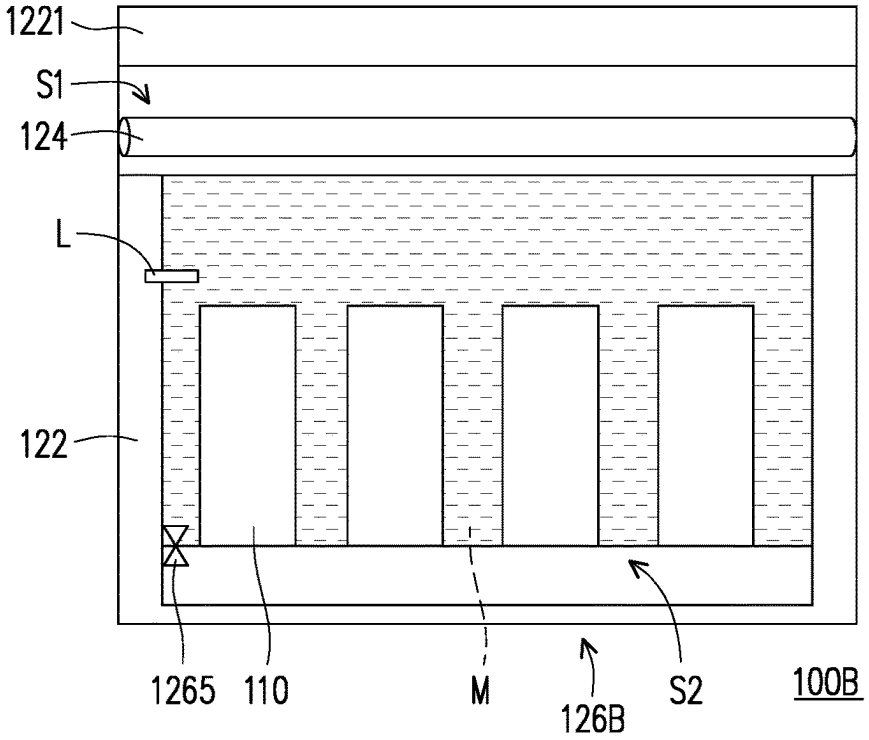
1221
S1
124
L
122
1265
110
M
126B
S2
100B

FIG. 9

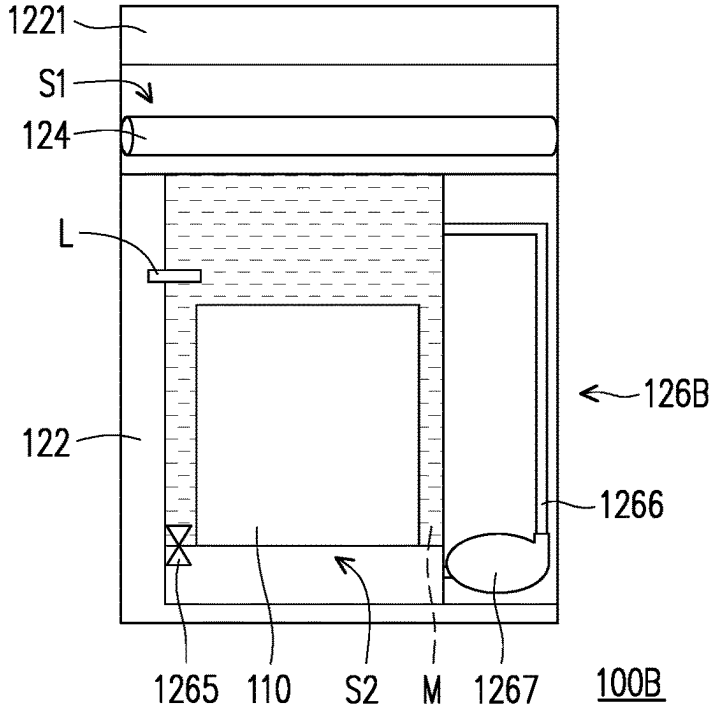
1221
S1
124
L
126B
122
1266
1265
110
S2
M
1267
100B

FIG. 10

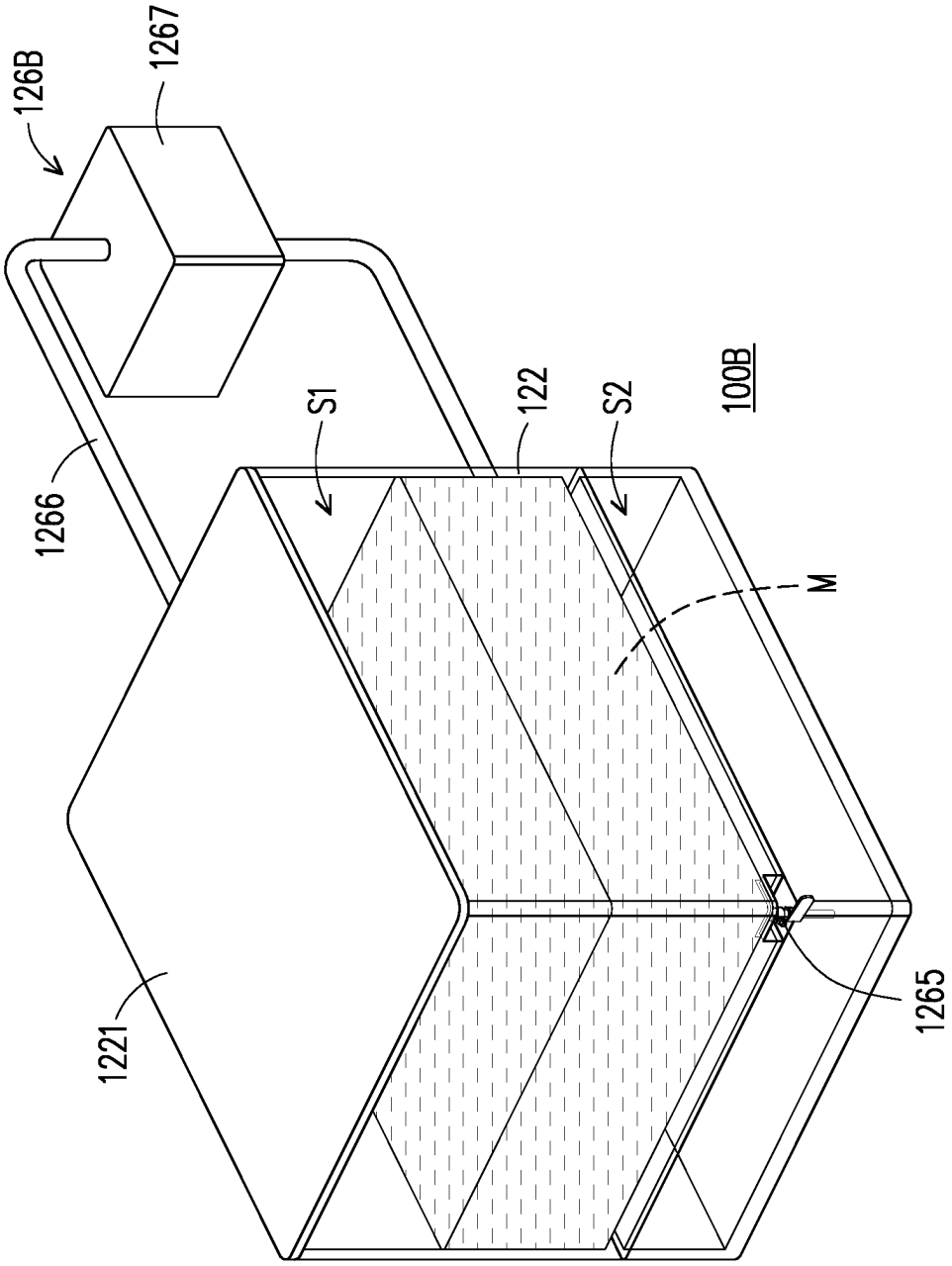

FIG. 11

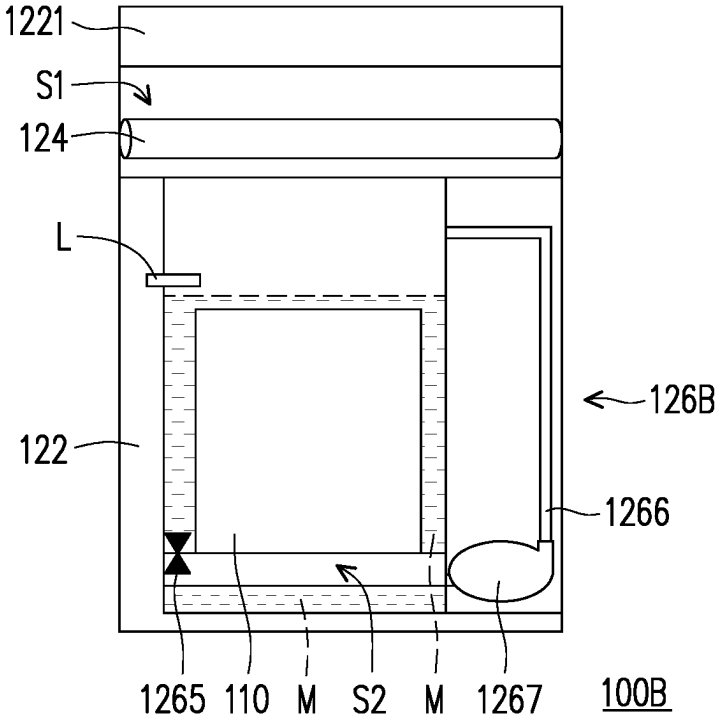

FIG. 12

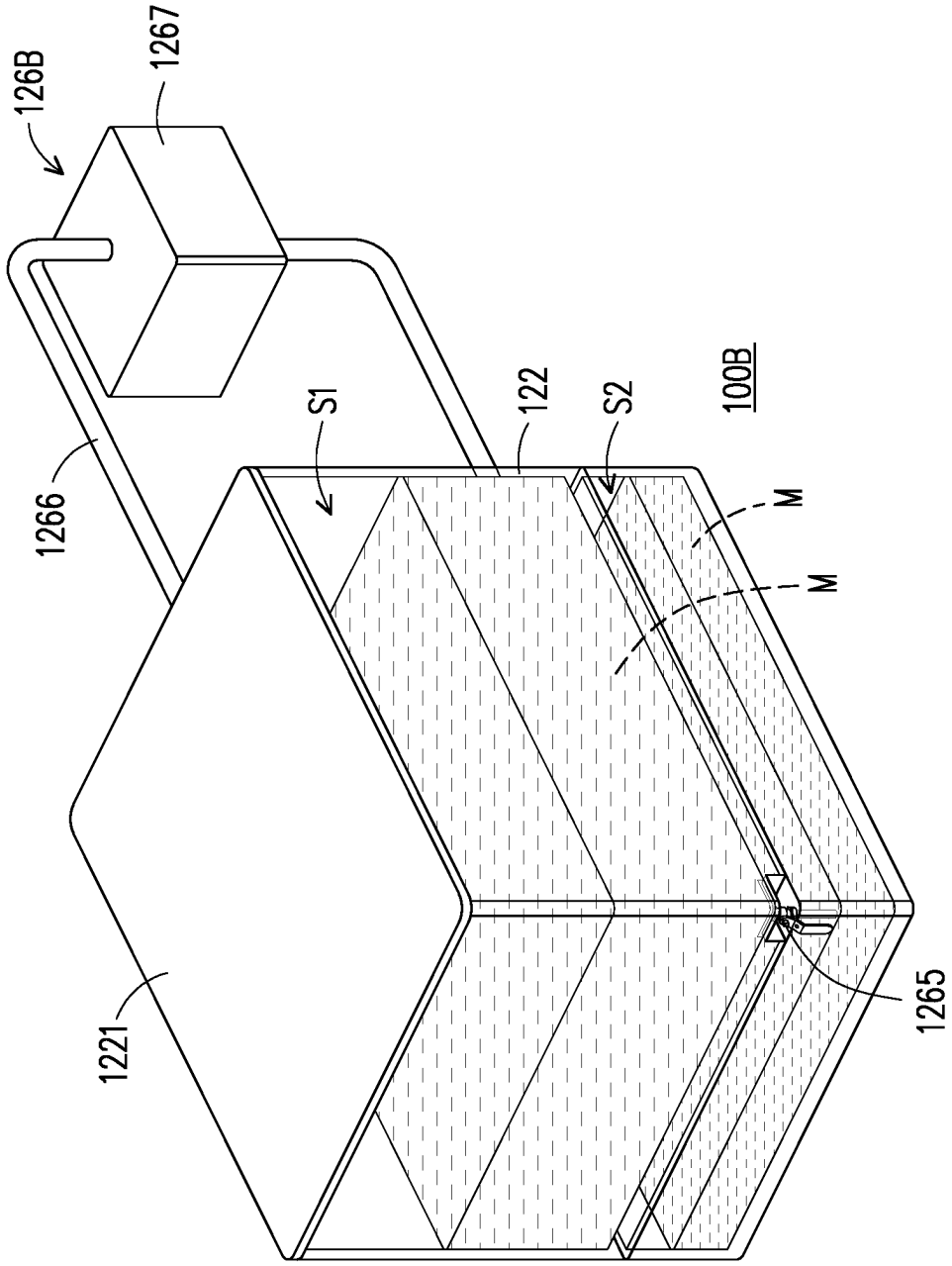

FIG. 13

IMMERSION COOLING SYSTEM AND ELECTRONIC APPARATUS HAVING THE SAME AND PRESSURE ADJUSTING MODULE

CROSS-REFERENCE TO RELATED APPLICATION

This application claims the priority benefit of Taiwan application serial no. 110116495, filed on May 7, 2021. The entirety of the above-mentioned patent application is hereby incorporated by reference herein and made a part of this specification.

BACKGROUND

Technical Field

The disclosure relates to a cooling system, an electronic apparatus having the same, and a pressure adjusting module; and particularly to, an immersion cooling system, an electronic apparatus having the same, and a pressure adjusting module.

Description of Related Art

As the performance of servers is rapidly enhanced, high-performance servers generate a lot of waste heat. To prevent a host from malfunctioning caused by the accumulation of waste heat, some servers are designed to immerse their motherboard in a liquid coolant. The liquid coolant absorbs the heat generated by the heating components of the motherboard and is gasified and condensed on a condensing pipeline. The heat dissipation droplets condensed on the pipeline fall back into the liquid coolant by gravity, and the process is in circulation to achieve the effect of heat dissipation, which is called two-phase immersion cooling technology in the industry. However, the price of the liquid coolant is usually expensive. If the pressure in the space used to contain the liquid coolant is relatively high, the gasified liquid coolant easily escapes to the outside environment, thereby increasing the maintenance cost of the servers.

SUMMARY

The disclosure provides an immersion cooling system capable of preventing a gaseous heat dissipation medium from escaping to the outside environment because of high pressure.

The disclosure provides an electronic apparatus having the immersion cooling system capable of preventing a gaseous heat dissipation medium from escaping to the outside environment because of high pressure.

The disclosure provides a pressure adjusting module adapted for the immersion cooling system.

In the disclosure, the immersion cooling system includes a box body, a condensing structure, and a pressure adjusting module. The box body includes a first containing space, the first containing space is adapted to contain a heat dissipation medium, and at least one heat generating component is disposed in the first containing space to be immersed in the heat dissipation medium which is in liquid state. The condensing structure is disposed in the first containing space and above the heat dissipation medium which is in a liquid state. The pressure adjusting module includes a second containing space, the second containing space interconnects with the first containing space, and the pressure adjusting module is adapted to actively drive a fluid in the first containing space to flow into the second containing space, such that a pressure in the first containing space is reduced to be less than an external pressure.

In the disclosure, the electronic apparatus includes at least one heat generating component and an immersion cooling system. The immersion cooling system includes a box body, a condensing structure, and a pressure adjusting module. The box body includes a first containing space, the first containing space is adapted to contain a heat dissipation medium, and the heat generating component is disposed in the first containing space to be immersed in the heat dissipation medium which is in liquid state. The condensing structure is disposed in the first containing space and above the heat dissipation medium which is in a liquid state. The pressure adjusting module includes a second containing space, the second containing space interconnects with the first containing space, and the pressure adjusting module is adapted to actively drive a fluid in the first containing space to flow into the second containing space, such that a pressure in the first containing space is reduced to be less than an external pressure.

In an embodiment of the disclosure, the pressure adjusting module is adapted to actively drive the fluid in the second containing space to flow into the first containing space.

In an embodiment of the disclosure, the fluid is gas in the first containing space.

In an embodiment of the disclosure, the fluid is the heat dissipation medium which is in liquid state in the first containing space.

In an embodiment of the disclosure, the pressure adjusting module includes a bellows structure and a driving unit, the second containing space is an expandable and contractible space of the bellows structure, and the driving unit is adapted to drive the expandable and contractible space to expand and drive gas in the first containing space to flow into the expandable and contractible space.

In an embodiment of the disclosure, the driving unit is adapted to drive the expandable and contractible space to contract and drive gas in the second containing space to flow into the first containing space.

In an embodiment of the disclosure, the second containing space is disposed under the first containing space, the pressure adjusting module includes a valve, the valve is disposed between the first containing space and the second containing space, and the valve is adapted to be turned on, so that the heat dissipation medium which is in liquid state in the first containing space flows into the second containing space.

In an embodiment of the disclosure, the pressure adjusting module includes a pipeline and a pump, the pipeline is connected between the first containing space and the second containing space, and the pump is disposed on a flow path of the pipeline and adapted to drive the heat dissipation medium which is in liquid state in the second containing space to flow into the first containing space.

In an embodiment of the disclosure, the pressure adjusting module includes a pipeline and a driving unit, the pipeline is connected between the first containing space and the second containing space, and the driving unit is disposed in the pipeline and adapted to drive gas in the first containing space to flow into the second containing space through the pipeline.

In an embodiment of the disclosure, the driving unit is adapted to drive gas in the second containing space to flow into the first containing space through the pipeline.

In the disclosure, the pressure adjusting module is adapted for a heat dissipation medium in a first containing space of an immersion cooling system and includes a driving unit and a second containing space, the second containing space interconnects with the first containing space of the immersion cooling system, and the driving unit drives the heat dissipation medium in the first containing space to flow into the second containing space.

In an embodiment of the disclosure, the pressure adjusting module is adapted to actively drive the fluid in the second containing space to flow into the first containing space.

In an embodiment of the disclosure, the fluid is gas in the first containing space.

In an embodiment of the disclosure, the fluid is the heat dissipation medium which is in liquid state in the first containing space.

In an embodiment of the disclosure, the pressure adjusting module includes a bellows structure, the second containing space is an expandable and contractible space of the bellows structure, and the driving unit is adapted to drive the expandable and contractible space to expand and drive gas in the first containing space to flow into the expandable and contractible space.

In an embodiment of the disclosure, the driving unit is adapted to drive the expandable and contractible space to contract and drive gas in the second containing space to flow into the first containing space.

In an embodiment of the disclosure, the second containing space is disposed under the first containing space, the pressure adjusting module includes a valve, the valve is disposed between the first containing space and the second containing space, and the valve is adapted to be turned on, so that the heat dissipation medium which is in liquid state in the first containing space flows into the second containing space.

In an embodiment of the disclosure, the pressure adjusting module includes a pipeline and a pump, the pipeline is connected between the first containing space and the second containing space, and the pump is disposed on a flow path of the pipeline and adapted to drive the heat dissipation medium which is in liquid state in the second containing space to flow into the first containing space.

In an embodiment of the disclosure, the pressure adjusting module includes a pipeline, the pipeline is connected between the first containing space and the second containing space, and the driving unit is disposed in the pipeline and adapted to drive gas in the first containing space to flow into the second containing space through the pipeline.

In an embodiment of the disclosure, the driving unit is adapted to drive gas in the second containing space to flow into the first containing space through the pipeline.

BRIEF DESCRIPTION OF THE DRAWINGS

FIG. **1** is a front schematic view of an electronic apparatus according to an embodiment of the disclosure.

FIG. **2** is a side schematic view of the electronic apparatus in FIG. **1**.

FIG. **3** is a perspective view illustrating part of components of the electronic apparatus in FIG. **1**.

FIG. **4** illustrates the operation of a pressure adjusting module in FIG. **2**.

FIG. **5** illustrates the operation of a pressure adjusting module in FIG. **3**.

FIG. **6** is a perspective view of a bellows structure according to another embodiment of the disclosure.

FIG. **7** is a perspective view illustrating part of components of an electronic apparatus according to another embodiment of the disclosure.

FIG. **8** is an enlarged view of part of the electronic apparatus in FIG. **7**.

FIG. **9** is a front schematic view of an electronic apparatus according to another embodiment of the disclosure.

FIG. **10** is a side schematic view of the electronic apparatus in FIG. **9**.

FIG. **11** is a perspective view illustrating part of components of the electronic apparatus in FIG. **9**.

FIG. **12** illustrates the operation of a pressure adjusting module in FIG. **9**.

FIG. **13** illustrates the operation of a pressure adjusting module in FIG. **11**.

DESCRIPTION OF THE EMBODIMENTS

FIG. **1** is a front schematic view of an electronic apparatus according to an embodiment of the disclosure. FIG. **2** is a side schematic view of the electronic apparatus in FIG. **1**. FIG. **3** is a perspective view illustrating part of components of the electronic apparatus in FIG. **1**. Referring to FIG. **1** to FIG. **3**, in the embodiment, an electronic apparatus **100** is a server and includes multiple heat generating components **110** and an immersion cooling system **120**, for example. The immersion cooling system **120** includes a box body **122** and a condensing structure **124**. The box body **122** includes a first containing space S**1**, and the first containing space S**1** is adapted to contain a heat dissipation medium M. For example, the heat generating component **110** is a motherboard and disposed in the first containing space S**1** to be immersed in the heat dissipation medium M which is in liquid state. The condensing structure **124** is disposed above the heat dissipation medium M which is in liquid state in the first containing space S**1**.

For example, at room temperature, the heat dissipation medium M is a dielectric liquid in liquid state and may be a fluorinated liquid having a boiling point of 40° C. to 60° C. or other suitable heat dissipation medium, for example, but the disclosure is not limited thereto. The liquid heat dissipation medium M may absorb the heat generated by the heat generating component **110** to reduce the temperature of the heat generating component **110** and is boiled and gasified rapidly through the heat generated by the heat generating component **110**. When a gaseous heat dissipation medium M having high thermal energy in the sealed first containing space S**1** flows to the condensing structure **124**, it is cooled by the low-temperature condensate flowing in the condensing structure **124** and condensed on the condensing structure **124**. The condensate in the condensing structure **124** absorbs the thermal energy from the heat dissipation medium M and then flows to the outside of the electronic apparatus **100** for heat exchange to be cooled, the cooled condensate flows back to the condensing structure **124**, and the process is in circulation. On the other hand, the droplets of the heat dissipation medium M condensed on the condensing structure **124** fall back into the liquid heat dissipation medium M through gravity, and the process is in circulation to achieve the heat dissipation effect. A cover body **1221** of the box body **122** is adapted to cover the box body **122** to seal the first containing space S**1** of the box body **122**, so that the heat dissipation medium M performs the circulation in the sealed first containing space S**1**. Moreover, the cover body **1221** may be opened relative to the box body **122** to expose the first containing space S**1** of the box body **122** to the

outside environment, so as to facilitate maintenance of the electronic apparatus **100** or removal or replacement of components.

The immersion cooling system **120** further includes a pressure adjusting module **126**. The pressure adjusting module **126** includes a second containing space S**2**, and the second containing space S**2** interconnects with the first containing space S**1**. The pressure adjusting module **126** is adapted to actively drive a fluid in the first containing space S**1** to flow to the second containing space S**2**, and the pressure in the first containing space S**1** is reduced and even turns to be in a negative pressure state. Accordingly, the gaseous heat dissipation medium M in the box body **122** is prevented from escaping to the outside environment because of high pressure. Moreover, the pressure adjusting module **126** is also adapted to actively drive the fluid in the second containing space S**2** to flow into the first containing space S**1**, and it is prevented that the cover body **1221** is difficult to be opened because of the negative pressure.

In the embodiment, for example, the fluid driven by the pressure adjusting module **126** is gas in the first containing space S**1**, and the fluid may include air and gaseous heat dissipation medium M. FIG.**4** illustrates the operation of a pressure adjusting module in FIG. **2**. FIG.**5** illustrates the operation of a pressure adjusting module in FIG. **3**. Specifically, in the embodiment, the pressure adjusting module **126** includes a bellows structure **1261** and a driving unit **1262**. The second containing space S**2** is an expandable and contractible space in the bellows structure **1261**. The driving unit **1262** is adapted to drive the expandable and contractible space (the second containing space S**2**) of the bellows structure **1261** to expand as shown in FIG. **4** and

FIG. **5**, so that gas in the first containing space S**1** is driven to flow into the expandable and contractible space (the second containing space S**2**).

For example, the electronic apparatus **100** includes a controller. The controller controls the driving unit **1262** to drive the bellows structure **1261** according to the pressure in the first containing space S**1**, so a preset negative pressure state is maintained in the first containing space S**1**. Moreover, the controller can control the driving unit **1262** to drive the expandable and contractible space (the second containing space S**2**) to contract as shown in FIG. **1** to FIG. **3**, and gas in the expandable and contractible space (the second containing space S**2**) is driven to flow into the first containing space S**1**. The driving unit **1262** can be implemented by a driving component, such as a motor or a cylinder, and the actual form of the driving component in the disclosure is not limited thereto.

Moreover, in the disclosure, the form of the bellows structure is not limited. FIG. **6** is a perspective view of a bellows structure according to another embodiment of the disclosure. The bellows structure **1261** shown in FIG. **3** can be replaced by a different form of a bellows structure **1261'** shown in FIG. **6**, or by other different forms.

FIG. **7** is a perspective view illustrating part of components of an electronic apparatus according to another embodiment of the disclosure. FIG. **8** is an enlarged view of part of the electronic apparatus in FIG. **7**. The difference between an electronic apparatus **100**A in FIG. **7** and the electronic apparatus **100** in FIG. **3** is that in FIG. **7**, a pressure adjusting module **126**A includes a pipeline **1263** and a driving unit **1264**. The pipeline **1263** is connected between the first containing space S**1** and the second containing space S**2**. For example, the driving unit **1264** is a fan and disposed in the pipeline **1263**. The driving unit **1264** is adapted to drive gas in the first containing space S**1** to flow into the second containing space S**2** through the pipeline **1263**. The electronic apparatus **100**A includes a controller, for example. The controller controls the driving unit **1264** according to the pressure in the first containing space S**1**, so a preset negative pressure state is maintained in the first containing space S**1**. Moreover, the controller can control the driving unit **1264** to drive gas in the second containing space S**2** to flow into the first containing space S**1** through the pipeline **1263**. The driving unit **1264** may be an airflow generating component, such as a fan. In the disclosure, the actual form of the airflow generating component is not limited.

FIG.**9** is a front schematic view of an electronic apparatus according to another embodiment of the disclosure. FIG.**10** is a side schematic view of the electronic apparatus in FIG. **9**. FIG.**11** is a perspective view illustrating part of components of the electronic apparatus in FIG.**9**. FIG.**12** illustrates the operation of a pressure adjusting module in FIG.**9**. FIG.**13** illustrates the operation of a pressure adjusting module in FIG.**11**. The difference between an electronic apparatus **100**B in FIG.**9** to FIG. **13** and the electronic apparatus **100** in FIG.**1** to FIG.**5** is that in the electronic apparatus **100**B, the fluid driven by the pressure adjusting module **126**B is the liquid heat dissipation medium M in the first containing space S**1**, for example.

Specifically, in the electronic apparatus **100**B, the second containing space S**2** is disposed under the first containing space S**1**. The pressure adjusting module **126**B includes a valve **1265**. For example, the valve **1265** is an electromagnetic valve and disposed between the first containing space S**1** and the second containing space S**2**. The valve **1265** is adapted to be turned on, so that the liquid heat dissipation medium M in the first containing space S**1** shown in FIG. **12** and FIG. **13** flows into the second containing space S**2**. By decreasing the volume of the liquid heat dissipation medium M in the first containing space S**1**, the volume of the gas in the first containing space S**1** increases to reduce the pressure of the gas. For example, the electronic apparatus **100**B includes a controller. The controller controls the valve **1265** to be turned on according to the pressure in the first containing space S**1**, so a preset negative pressure state is maintained in the first containing space S**1**.

Moreover, the pressure adjusting module **126**B further includes a pipeline **1266** and a pump **1267**. The pipeline **1266** is connected between the first containing space S**1** and the second containing space S**2**. The pump **1267** is disposed on a flow path of the pipeline **1266** and adapted to drive the liquid heat dissipation medium M in the second containing space S**2** to flow into the first containing space S**1**. The controller can control the valve **1265** and the pump **1267** according to a liquid level sensed by a level gauge L to maintain a preset liquid level of the heat dissipation medium M.

In other embodiments, at least any two or all three of the pressure adjusting module **126** shown in FIG. **1** to FIG. **5**, the pressure adjusting module **126**A shown in FIG. **7**, and the pressure adjusting module **126**B shown in FIG. **9** to FIG. **13** can be disposed in the electronic apparatus to control the pressure of the first containing space S**1** in the box body **122** in a more effective manner.

In summary, in the disclosure, by actively driving the fluid in the box body to flow outside the box body through the pressure adjusting module, the pressure in the box body can be reduced to be less than an external pressure effectively, so the box body turns to be in a negative pressure state, thereby

preventing the gaseous heat dissipation medium in the box body from escaping to the outside environment because of high pressure.

What is claimed is:

1. An immersion cooling system, comprising:

a box body comprising a first containing space, wherein the first containing space is adapted to contain a heat dissipation medium and is configured to be adjustable to a negative pressure state, and at least one heat generating component is disposed in the first containing space to be immersed in the heat dissipation medium which is in liquid state;

a condensing structure disposed in the first containing space and above the heat dissipation medium which is in a liquid state, the condensing structure comprises a heat exchanger; and

a pressure adjusting module comprising a second containing space, wherein the second containing space interconnects with the first containing space, and the pressure adjusting module is configured to actively drive a fluid in the first containing space to flow into the second containing space to adjust the first containing space to the negative pressure state,

wherein the pressure adjusting module is configured to actively drive the fluid in gas state in the second containing space to flow into the first containing space,

wherein the pressure adjusting module comprises a bellows structure and a driving unit, the driving unit comprises a motor or a cylinder, the second containing space is an expandable and contractible space of the bellows structure, and the driving unit is configured to drive the expandable and contractible space to expand and drive gas in the first containing space to flow into the expandable and contractible space.

2. The immersion cooling system of claim **1**, wherein the fluid is gas in the first containing space.

3. The immersion cooling system of claim **1**, wherein the driving unit is adapted to drive the expandable and contractible space to contract and drive gas in the expandable and contractible space to flow into the first containing space.

4. An electronic apparatus, comprising:

at least one heat generating component; and

an immersion cooling system, comprising:

a box body comprising a first containing space, wherein the first containing space is adapted to contain a heat dissipation medium and is configured to be adjustable to a negative pressure state, and at least one heat generating component is disposed in the first containing space to be immersed in the heat dissipation medium which is in liquid state;

a condensing structure disposed in the first containing space and above the heat dissipation medium which is in a liquid state, the condensing structure comprises a heat exchanger; and

a pressure adjusting module comprising a second containing space, wherein the second containing space interconnects with the first containing space, and the pressure adjusting module is configured to actively drive a fluid in the first containing space to flow into the second containing space to adjust the first containing space to the negative pressure state,

wherein the pressure adjusting module is configured to actively drive the fluid in gas state in the second containing space to flow into the first containing space,

wherein the pressure adjusting module comprises a bellows structure and a driving unit, the driving unit comprises a motor or a cylinder, the second containing space is an expandable and contractible space of the bellows structure, and the driving unit is configured to drive the expandable and contractible space to expand and drive gas in the first containing space to flow into the expandable and contractible space.

5. The electronic apparatus of claim **4**, wherein the fluid is gas in the first containing space.

6. The electronic apparatus of claim **4**, wherein the driving unit is adapted to drive the expandable and contractible space to contract and drive gas in the expandable and contractible space to flow into the first containing space.

* * * * *