US012389651B2

(12) **United States Patent**
Jang et al.

(10) **Patent No.: US 12,389,651 B2**
(45) **Date of Patent: Aug. 12, 2025**

(54) **SEMICONDUCTOR STRUCTURE AND FABRICATION METHOD THEREOF**

(71) Applicant: **CHANGXIN MEMORY TECHNOLOGIES, INC.**, Hefei (CN)

(72) Inventors: **Semyeong Jang**, Hefei (CN); **Joonsuk Moon**, Hefei (CN); **Deyuan Xiao**, Hefei (CN); **Jo-Lan Chin**, Hefei (CN)

(73) Assignee: **CHANGXIN MEMORY TECHNOLOGIES, INC.**, Hefei (CN)

(*) Notice: Subject to any disclaimer, the term of this patent is extended or adjusted under 35 U.S.C. 154(b) by 449 days.

(21) Appl. No.: **17/893,209**

(22) Filed: **Aug. 23, 2022**

(65) **Prior Publication Data**

US 2023/0275130 A1 Aug. 31, 2023

Related U.S. Application Data

(63) Continuation of application No. PCT/CN2022/084782, filed on Apr. 1, 2022.

(30) **Foreign Application Priority Data**

Jan. 17, 2022 (CN) 202210048953.X

(51) **Int. Cl.**
H10D 64/01 (2025.01)
H01L 21/02 (2006.01)
(Continued)

(52) **U.S. Cl.**
CPC ***H10D 64/01*** (2025.01); ***H01L 21/02164*** (2013.01); ***H01L 21/02238*** (2013.01);
(Continued)

(58) **Field of Classification Search**
CPC .. H10D 64/01; H10D 30/6728; H10D 30/014; H10D 30/6735; H10D 62/122;
(Continued)

(56) **References Cited**

U.S. PATENT DOCUMENTS

2022/0277985 A1* 9/2022 Huang H10D 84/0151
2022/0310457 A1* 9/2022 Chang H10D 84/0144

FOREIGN PATENT DOCUMENTS

CN 104009082 A 8/2014
CN 106328647 A 1/2017
(Continued)

Primary Examiner — Zandra V Smith
Assistant Examiner — Andre C Stevenson
(74) *Attorney, Agent, or Firm* — Kilpatrick Townsend & Stockton LLP

(57) **ABSTRACT**

Embodiments relate to a semiconductor structure and a fabrication method. The method includes: providing a substrate, where a first trench is formed in the substrate; forming a first dielectric layer and a protective material layer in the first trench, where the first dielectric layer is positioned between the protective material layer and the substrate, and an upper surface of the first dielectric layer is lower than an upper surface of the substrate, to expose a portion of a side wall of the first trench; forming a second dielectric layer on the exposed side wall of the first trench; and filling the second trench to form a work function structure, where the work function structure includes a first work function layer and a second work function layer, where the second work function layer is positioned on an upper surface of the first work function layer.

7 Claims, 8 Drawing Sheets

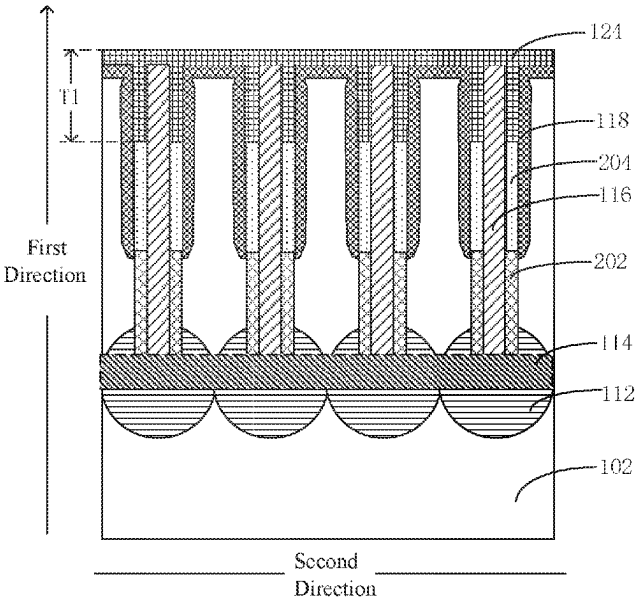

(51) **Int. Cl.**

H01L 21/28	(2025.01)
H01L 21/321	(2006.01)
H10D 30/01	(2025.01)
H10D 30/67	(2025.01)
H10D 62/10	(2025.01)

(52) **U.S. Cl.**
CPC .. ***H01L 21/28097*** (2013.01); ***H01L 21/28123*** (2013.01); ***H01L 21/28247*** (2013.01); ***H01L 21/32105*** (2013.01); ***H10D 30/014*** (2025.01); ***H10D 30/6728*** (2025.01); ***H10D 30/6735*** (2025.01); ***H10D 30/6739*** (2025.01); ***H10D 62/122*** (2025.01)

(58) **Field of Classification Search**
CPC H10D 30/6739; H01L 21/02164; H01L 21/02238; H01L 21/28097; H01L 21/28123; H01L 21/28247; H01L 21/32105
See application file for complete search history.

(56) **References Cited**

FOREIGN PATENT DOCUMENTS

CN	107527912	A	12/2017
CN	108807389	A	11/2018
CN	108987282	A	12/2018
CN	110931487	A	3/2020
CN	111627819	A	9/2020

* cited by examiner

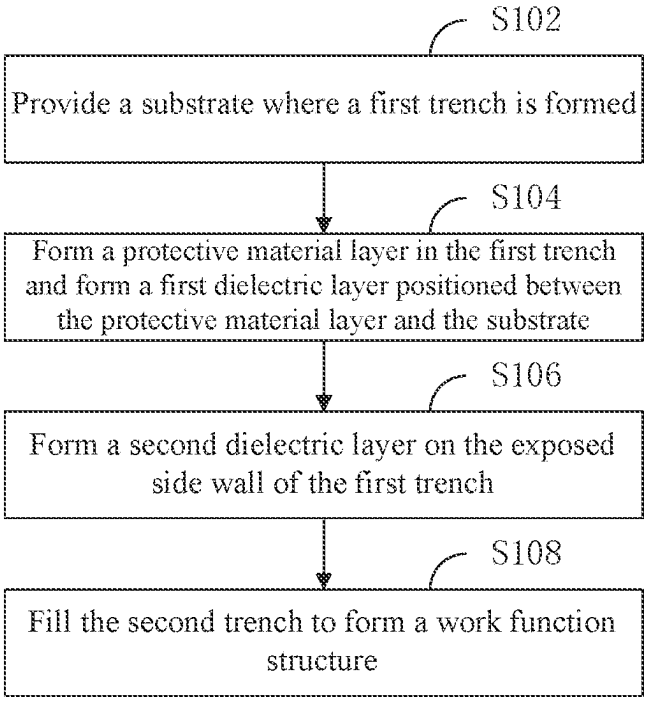
S102
Provide a substrate where a first trench is formed
S104
Form a protective material layer in the first trench and form a first dielectric layer positioned between the protective material layer and the substrate
S106
Form a second dielectric layer on the exposed side wall of the first trench
S108
Fill the second trench to form a work function structure

Fig. 1

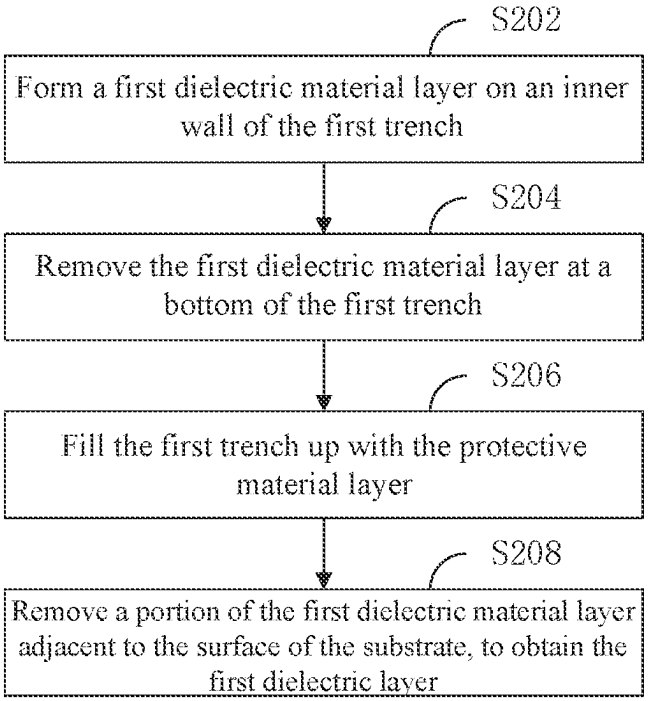
S202
Form a first dielectric material layer on an inner wall of the first trench
S204
Remove the first dielectric material layer at a bottom of the first trench
S206
Fill the first trench up with the protective material layer
S208
Remove a portion of the first dielectric material layer adjacent to the surface of the substrate, to obtain the first dielectric layer

Fig. 2

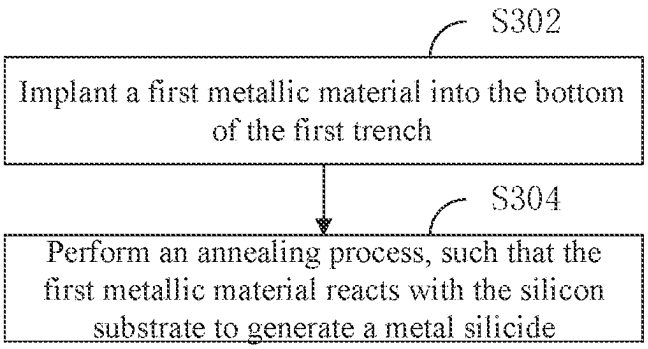
S302
Implant a first metallic material into the bottom of the first trench
S304
Perform an annealing process, such that the first metallic material reacts with the silicon substrate to generate a metal silicide

Fig. 3

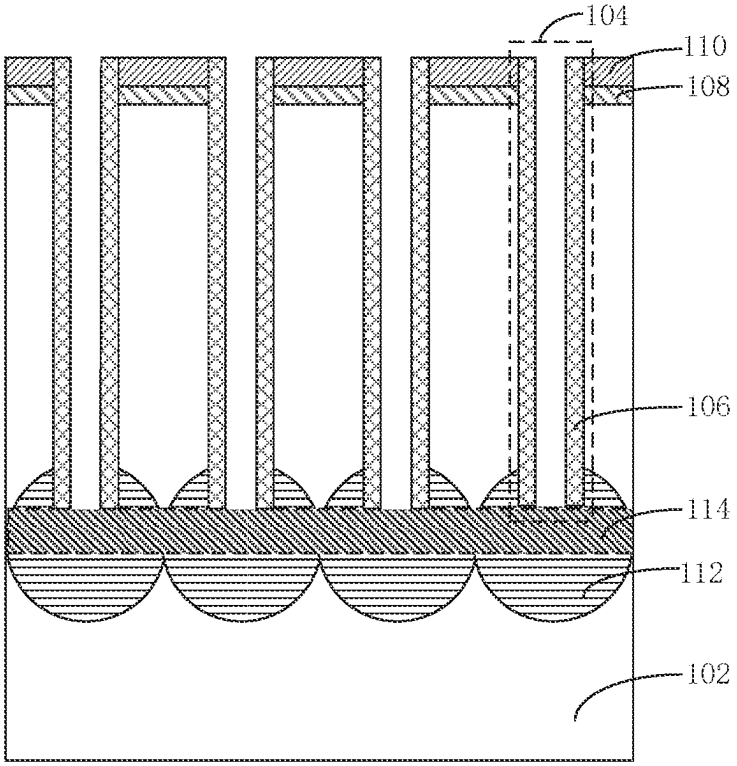
104
110
108
106
114
112
102

Fig. 4

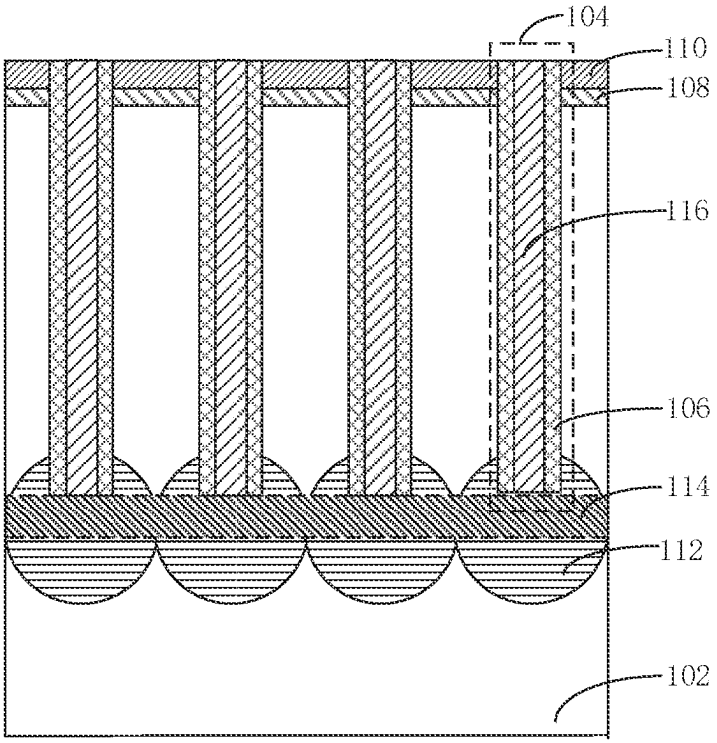

Fig. 5

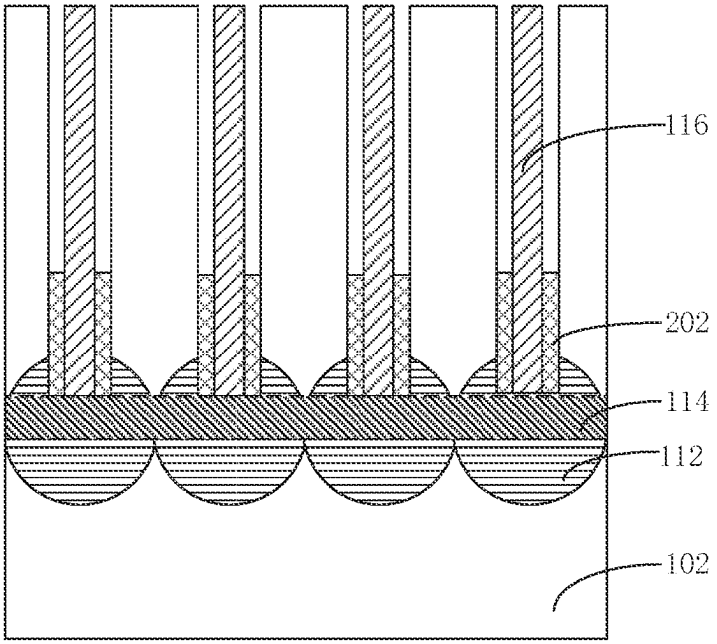

Fig. 6

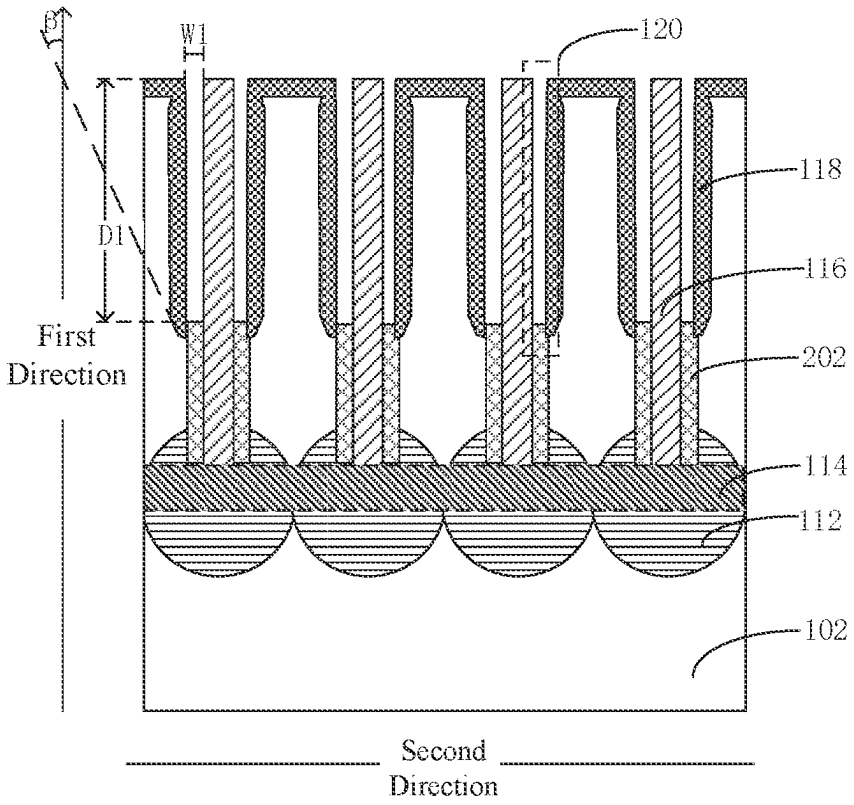
β
W1
120
118
D1
116
First
Direction
202
114
112
102
Second
Direction

Fig. 7

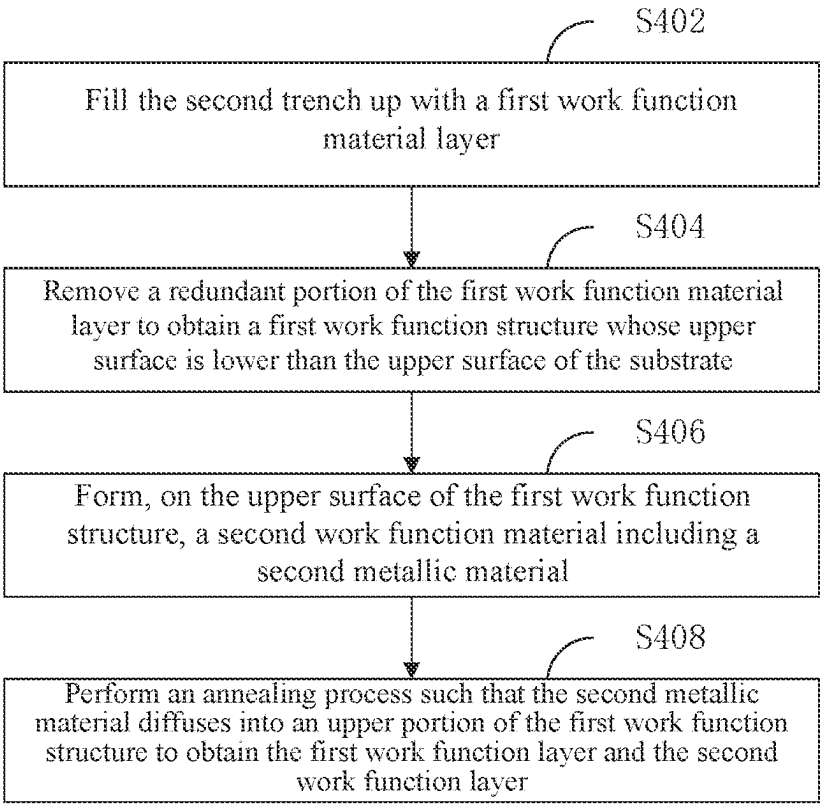
S402
Fill the second trench up with a first work function material layer
S404
Remove a redundant portion of the first work function material layer to obtain a first work function structure whose upper surface is lower than the upper surface of the substrate
S406
Form, on the upper surface of the first work function structure, a second work function material including a second metallic material
S408
Perform an annealing process such that the second metallic material diffuses into an upper portion of the first work function structure to obtain the first work function layer and the second work function layer

Fig. 8

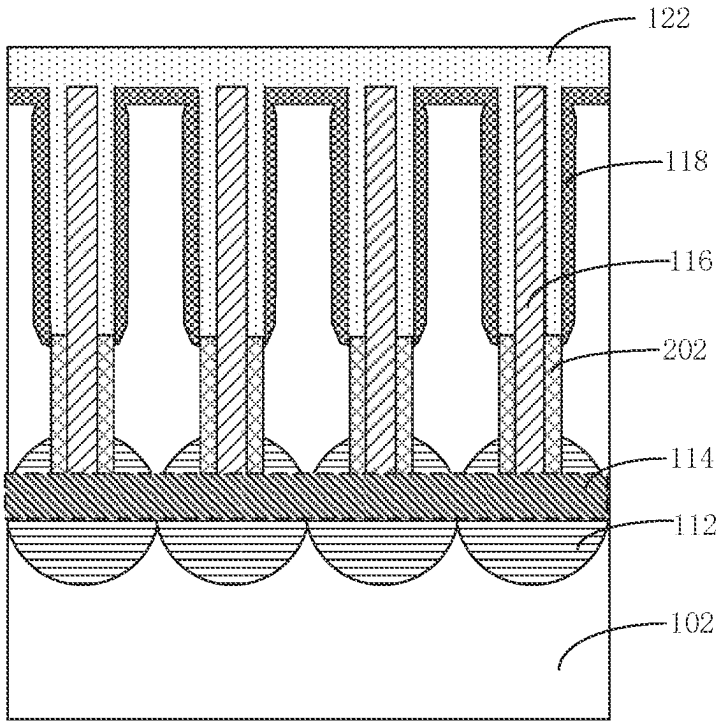
122
118
116
202
114
112
102

Fig. 9

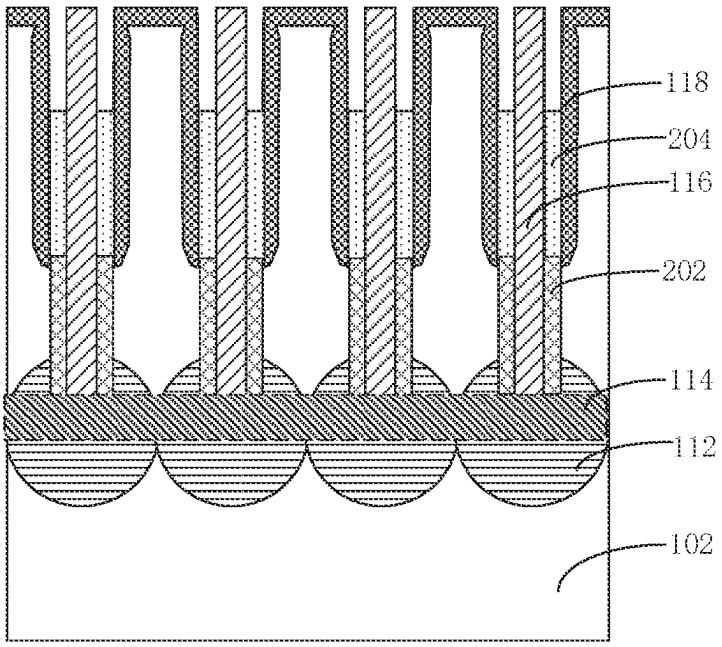
118
204
116
202
114
112
102

Fig. 10

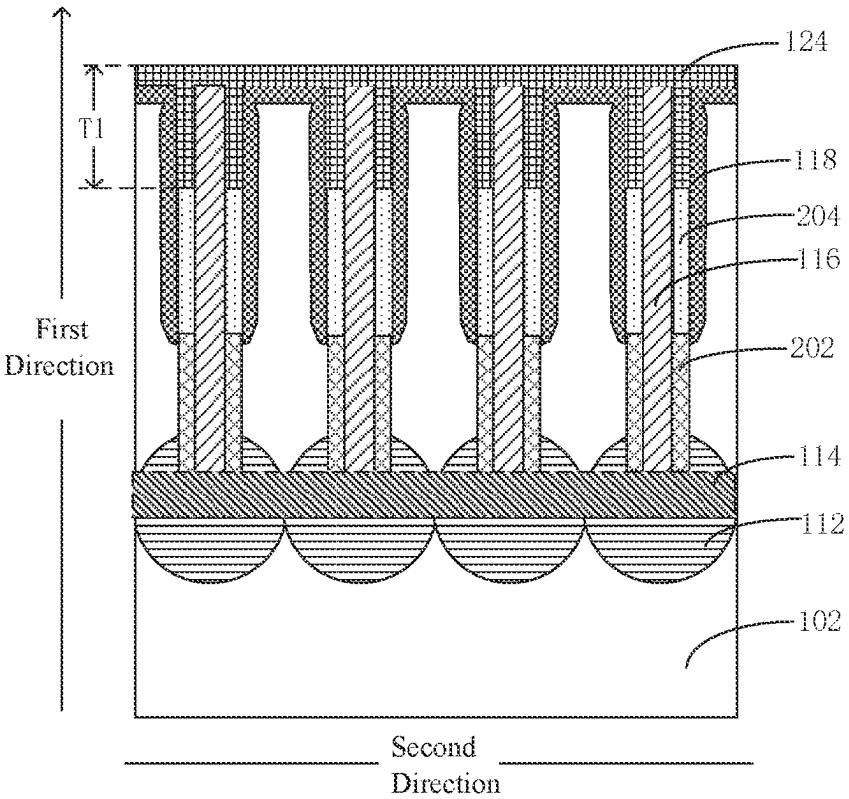
124
T1
118
204
116
First
Direction
202
114
112
102
Second
Direction

Fig. 11

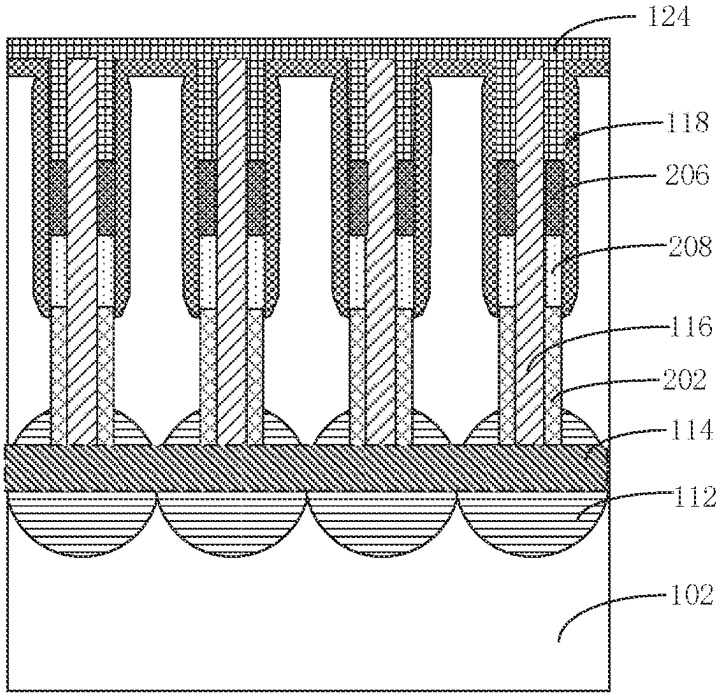
124
118
206
208
116
202
114
112
102

Fig. 12

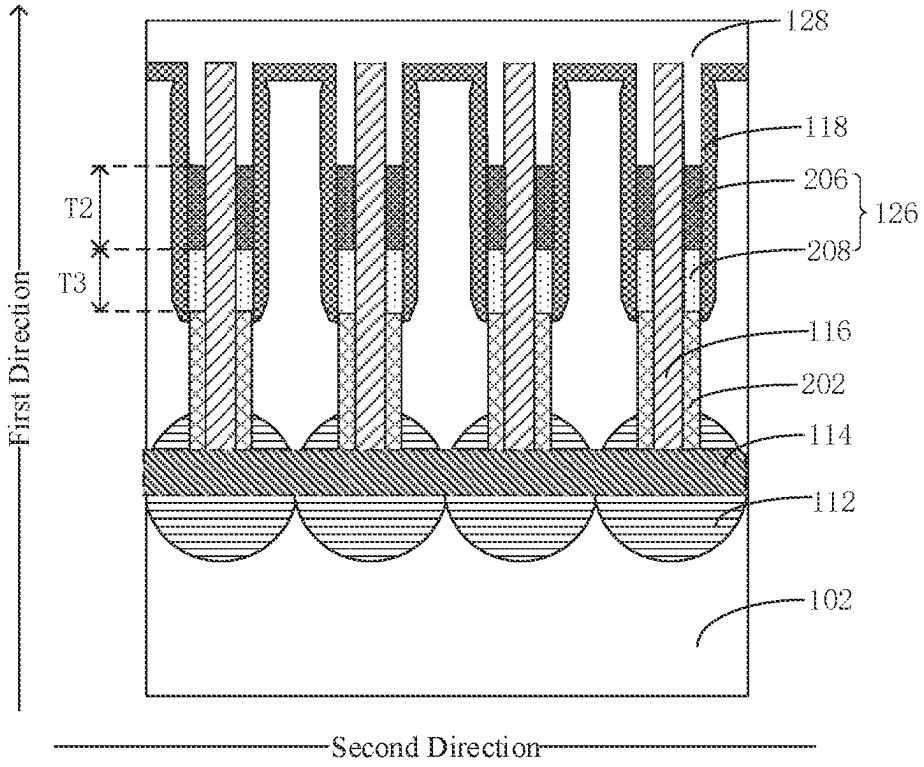
128
118
206
126
208
T2
T3
116
202
114
112
102
First Direction
Second Direction

Fig. 13

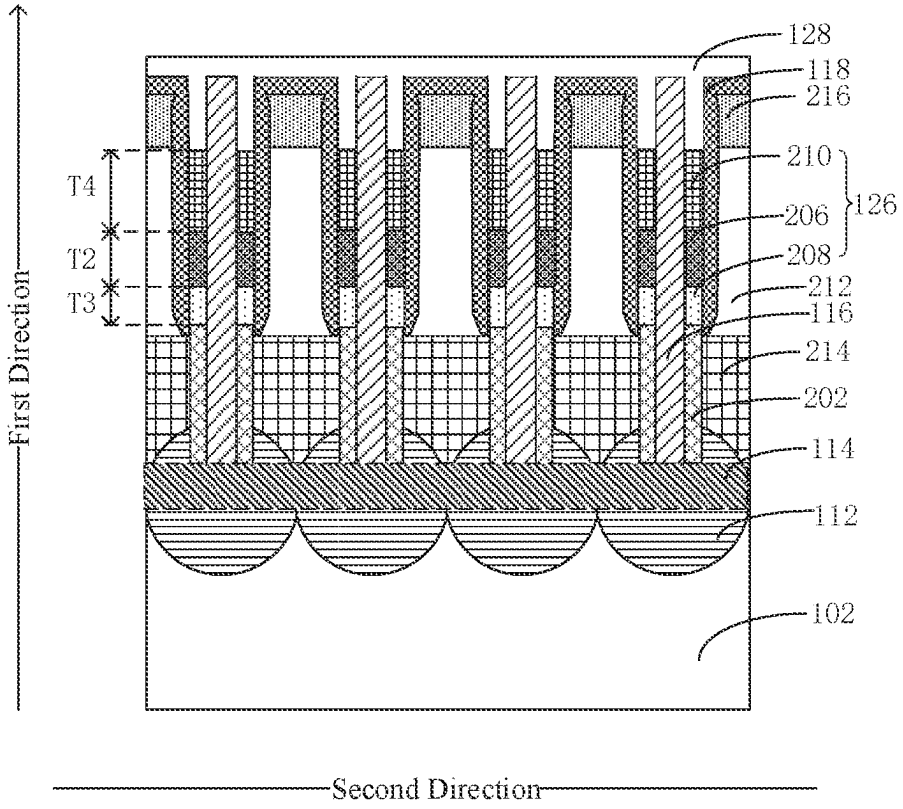
128
118
216
210
126
206
208
212
116
214
202
114
112
102
T4
T2
T3
First Direction
Second Direction

Fig. 14

SEMICONDUCTOR STRUCTURE AND FABRICATION METHOD THEREOF

CROSS-REFERENCE TO RELATED APPLICATION

The present disclosure is a continuation of PCT/CN2022/084782, filed on Apr. 1, 2022, which claims priority to Chinese Patent Application No. 202210048953X filed to the State Patent Intellectual Property Office on Jan. 17, 2022, the entire contents of which are incorporated herein by reference.

TECHNICAL FIELD

The present disclosure relates to the field of semiconductor technology, and more particularly, to a semiconductor structure and a fabrication method thereof.

BACKGROUND

In a vertical gate-all-around (VGAA) transistor, a trench region of the transistor extends in a direction perpendicular to a surface of a substrate, which helps to increase area utilization of a semiconductor structure provided with the transistor, and further reduce a feature size. However, leakage current of the transistor is larger, which has a negative effect on performance of the semiconductor structure. Therefore, how to improve the performance of the semiconductor structure becomes an urgent problem to be solved during use of the VGAA transistor.

SUMMARY

According to various embodiments of the present disclosure, a semiconductor structure and a fabrication method thereof are provided.

According to some embodiments, one aspect of the present disclosure provides a method for fabricating a semiconductor structure, including:

providing a substrate, where a first trench is formed in the substrate;

forming a first dielectric layer and a protective material layer in the first trench, where the first dielectric layer is positioned between the protective material layer and the substrate, and an upper surface of the first dielectric layer is lower than an upper surface of the substrate to expose a portion of a side wall of the first trench;

forming a second dielectric layer on the exposed side wall of the first trench, where a second trench is formed between the second dielectric layer and the protective material layer, and the second dielectric layer is in contact with the first dielectric layer; and

filling the second trench to form a work function structure, where the work function structure includes a first work function layer and a second work function layer.

The second work function layer is positioned on an upper surface of the first work function layer, and a work function of the second work function layer is smaller than a work function of the first work function layer.

According to some embodiments, the forming a first dielectric layer and a protective material layer in the first trench includes:

forming a first dielectric material layer on an inner wall of the first trench;

removing the first dielectric material layer at a bottom of the first trench;

filling the first trench up with the protective material layer; and

removing a portion of the first dielectric material layer adjacent to the upper surface of the substrate, where a reserved portion of the first dielectric material layer is the first dielectric layer.

According to some embodiments, the substrate includes a silicon substrate; a portion of the silicon substrate is exposed at the bottom of the first trench; and after the removing the first dielectric material layer at a bottom of the first trench, the method further includes:

implanting a first metallic material into the bottom of the first trench; and

performing an annealing process, such that the first metallic material reacts with the silicon substrate to generate metal silicides,

where the metal silicides at the bottoms of the adjacent first trenches are in contact with each other.

According to some embodiments, the substrate internally further includes an active pillar positioned between the adjacent first trenches, the second dielectric layer includes a first silicon oxide layer, and the forming a second dielectric layer on the exposed side wall of the first trench includes:

growing the first silicon oxide layer on the side wall of the first trench by means of thermal oxidation.

According to some embodiments, an angle between a bottom of the second dielectric layer and a first direction is greater than 0° and less than or equal to 90°.

The first direction refers to a direction where the bottom of the first trench points to an opening of the first trench.

According to some embodiments, the filling the second trench to form a work function structure includes:

filling the second trench up with a first work function material layer;

removing a redundant portion of the first work function material layer to obtain a first work function structure, where an upper surface of the first work function structure is lower than the upper surface of the substrate;

forming a second work function material layer on the upper surface of the first work function structure, where an upper surface of the second work function material layer is not lower than the upper surface of the substrate, and the second work function material layer includes a second metallic material; and

performing an annealing process such that the second metallic material diffuses into an upper portion of the first work function structure to form a second work function layer and obtain a first work function layer formed from a remaining portion of the first work function structure.

According to some embodiments, after the performing an annealing process, the method further includes:

removing the second work function material layer on an upper surface of the second work function layer.

According to some embodiments, the work function structure further includes a third work function layer positioned on the upper surface of the second work function layer; and after the performing an annealing process, the method further includes:

removing a portion of the second work function material layer on the upper surface of the second work function layer to obtain the third work function layer formed from a remaining portion of the second work function material layer.

According to some embodiments, the first work function material layer includes a third metallic material, and a work

function of the third metallic material is greater than a work function of the second metallic material.

According to some embodiments, the third metallic material includes titanium, and the second metallic material includes at least one of lanthanum, zirconium, hafnium, and aluminum.

According to some embodiments, a height of the second work function layer is greater than or equal to a height of the first work function layer.

According to some embodiments, an upper surface of the work function structure is lower than the upper surface of the substrate; and after the filling the second trench to form a work function structure, the method further includes:

forming an isolation material layer on an upper surface of the work function structure, where an upper surface of the isolation material layer is not lower than the upper surface of the substrate.

According to some embodiments, the isolation material layer and the protective material layer are formed from a same material.

According to some embodiments, another aspect of the present disclosure discloses a semiconductor structure, which includes:

a substrate, where a first trench is formed in the substrate;

a protective material layer positioned in the first trench;

a first dielectric layer positioned on a side wall of the first trench and between the protective material layer and the substrate;

a second dielectric layer positioned on the side wall of the first trench, where the second dielectric layer is in contact with the first dielectric layer and is positioned between the protective material layer and the substrate, and a second trench is provided between the second dielectric layer and the protective material layer; and

a work function structure positioned in the second trench, where the work function structure includes a first work function layer and a second work function layer,

where the second work function layer is positioned on an upper surface of the first work function layer, and a work function of the second work function layer is smaller than a work function of the first work function layer.

According to some embodiments, an angle between a bottom of the second dielectric layer and a first direction is greater than 0° and less than or equal to 90°.

The first direction refers to a direction where the bottom of the first trench points to an opening of the first trench.

According to some embodiments, the second work function layer includes a second metallic material, and the first work function layer includes a third metallic material, where a work function of the third metallic material is greater than a work function of the second metallic material.

According to some embodiments, the third metallic material includes titanium, and the second metallic material includes at least one of lanthanum, zirconium, hafnium, and aluminum.

According to some embodiments, the work function structure further includes:

a third work function layer positioned on an upper surface of the second work function layer, where the third work function layer includes the second metallic material.

According to some embodiments, an upper surface of the work function structure is lower than an upper surface of the substrate, and the semiconductor structure further includes:

an isolation material layer positioned on the upper surface of the work function structure, where an upper surface of the isolation material layer is not lower than the upper surface of the substrate.

According to some embodiments, a height of the second work function layer is greater than or equal to a height of the first work function layer.

The embodiments of the present disclosure may at least have following advantages.

In the method for fabricating a semiconductor structure, a first trench is formed in a substrate, a protective material layer is formed in the first trench, and a first dielectric layer is positioned between the protective material layer and the substrate. A second dielectric layer is positioned on an exposed side wall of the first trench and is in contact with the first dielectric layer, and a second trench is formed between the second dielectric layer and the protective material layer. The second trench is filled to form a work function structure, where the work function structure includes a first work function layer and a second work function layer positioned on an upper surface of the first work function layer, and a work function of the second work function layer is smaller than a work function of the first work function layer. Without changing a resistance, leakage current of the semiconductor structure using the work function structure as a gate structure is reduced, and electrical stability and performance of the semiconductor structure are improved.

In the above semiconductor structure, a first trench is formed in a substrate, a protective material layer is formed in the first trench, and a first dielectric layer is positioned between the protective material layer and the substrate. A second dielectric layer is positioned on an exposed side wall of the first trench and is in contact with the first dielectric layer, and a second trench is formed between the second dielectric layer and the protective material layer. A work function structure is positioned in the second trench, where the work function structure includes a first work function layer and a second work function layer positioned on an upper surface of the first work function layer, and a work function of the second work function layer is smaller than a work function of the first work function layer. Without changing a resistance, leakage current of the semiconductor structure using the work function structure as a gate structure is reduced, and electrical stability and performance of the semiconductor structure are improved.

Details of one or more embodiments of the present disclosure are set forth in the following drawings and descriptions. Other features, objectives, and advantages of the present disclosure will become apparent from the specification, the drawings, and the claims.

BRIEF DESCRIPTION OF THE DRAWINGS

To describe the technical solutions of the embodiments of the present disclosure or that of the prior art more clearly, the accompanying drawings required for describing the embodiments or the prior art will be briefly introduced below. Apparently, the accompanying drawings in the following description are merely some embodiments of the present disclosure. To those of ordinary skills in the art, other accompanying drawings may also be derived from these accompanying drawings without creative efforts.

FIG. **1** is a schematic flowchart of a method for fabricating a semiconductor structure in an embodiment;

FIG. **2** is a schematic flowchart of Step **S104** in an embodiment;

FIG. **3** is a schematic flowchart of a method for fabricating a semiconductor structure in another embodiment;

FIG. **4** is a schematic cross-sectional view of a semiconductor structure obtained after a metal silicide is formed in an embodiment;

FIG. **5** is a schematic cross-sectional view of a semiconductor structure obtained after a protective material layer is formed in an embodiment corresponding to FIG. **4**;

FIG. **6** is a schematic cross-sectional view of a semiconductor structure obtained after a first dielectric layer is formed in an embodiment corresponding to FIG. **5**;

FIG. **7** is a schematic cross-sectional view of a semiconductor structure obtained after a second dielectric layer is formed in an embodiment corresponding to FIG. **6**;

FIG. **8** is a schematic flowchart of Step S**108** in an embodiment;

FIG. **9** is a schematic cross-sectional view of a semiconductor structure obtained after a first work function material layer is formed in an embodiment corresponding to FIG. **7**;

FIG. **10** is a schematic cross-sectional view of a semiconductor structure obtained after a first work function structure is formed in an embodiment corresponding to FIG. **9**;

FIG. **11** is a schematic cross-sectional view of a semiconductor structure obtained after a second work function material layer is formed in an embodiment corresponding to FIG. **10**;

FIG. **12** is a schematic cross-sectional view of a semiconductor structure obtained after a second work function layer is formed in an embodiment corresponding to FIG. **11**;

FIG. **13** is a schematic cross-sectional view of a semiconductor structure obtained after an isolation material layer is formed in an embodiment; and

FIG. **14** is a schematic cross-sectional view of a semiconductor structure obtained after an isolation material layer is formed in another embodiment.

REFERENCE NUMERALS IN THE ATTACHED DRAWINGS

102: substrate; **104**: first trench; **106**: first dielectric material layer; **108**: barrier layer; **110**: hard mask layer; **112**: metal silicide; **114**: bit line structure; **116**: protective material layer; **118**: second dielectric layer; **120**: second trench; **122**: first work function material layer; **124**: second work function material layer; **126**: work function structure; **128**: isolation material layer; **202**: first dielectric layer; **204**: first work function structure; **206**: second work function layer; **208**: first work function layer; **210**: third work function layer; **212**: drift region; **214**: first portion; and **216**: second portion.

DETAILED DESCRIPTION

For ease of understanding the present disclosure, the present disclosure will be described more fully hereinafter with reference to the accompanying drawings. Embodiments of the present disclosure are presented in the accompanying drawings. However, the present disclosure may be embodied in many different forms and should not be limited to the embodiments set forth herein. Rather, these embodiments are provided such that the present disclosure will be more thorough and complete.

Unless otherwise defined, all technical and scientific terms employed herein have the same meaning as commonly understood by one of ordinary skill in the art to which the present disclosure belongs. The terms employed in the specification of the present disclosure are merely for the purpose of describing some embodiments and are not intended for limiting the present disclosure. As used herein, the term "and/or" includes any and all combinations of one or more of the associated listed items.

In addition, in the description of the present disclosure, it is to be understood that the orientations or positions represented by the terms of "above", "below", "vertical", "horizontal", "inside", "outside", and the like are based on methods or positions shown in the accompanying drawings, they are merely for ease of a description of the present disclosure and a simplified description instead of being intended to indicate or imply the device or element to have a special orientation or to be configured and operated in a special orientation. Thus, they cannot be understood as limiting of the present disclosure.

It is to be understood that the terms "first", "second", etc. used in the present disclosure may be used herein to describe various elements, but these elements are not limited by these terms. These terms are only intended for distinguishing a first element from another one. For example, a first dielectric layer may be referred to as a second dielectric layer, and, similarly, a second dielectric layer may be referred to as a first dielectric layer, without departing from the scope of the present disclosure. Both the first dielectric layer and the second dielectric layer are dielectric layers, but they are not the same dielectric layer.

In addition, terms "first" and "second" are used only for purposes of description and are not intended to indicate or imply relative importance or to imply the number of indicated technical features. Thus, the feature defined with "first" and "second" may explicitly or implicitly include at least one such feature. In the description of the present disclosure, "a plurality of" refers to at least two, for example, two, three, etc., unless otherwise expressly specified. In the description of the present disclosure, "a number of" refers to at least one, for example, one, two, etc., unless otherwise expressly specified.

FIG. **1** is a schematic flowchart of a method for fabricating a semiconductor structure in an embodiment. As shown in FIG. **1**, in this embodiment, a method for fabricating a semiconductor structure is provided, which includes following steps.

S**102**: Providing a Substrate where a First Trench is Formed.

In some embodiments, a substrate is provided, and a first trench is formed in the substrate, where the substrate may be made of undoped monocrystalline silicon, impurity-doped monocrystalline silicon, silicon on insulator (SOI), stacked silicon on insulator (SSOI), silicon germanium on insulator (S—SiGeOI), silicon germanium on insulator (SiGeOI), and germanium on insulator (GeOI). As an example, in this embodiment, monocrystalline silicon is selected as a material for forming the substrate.

S**104**: Forming a Protective Material Layer in the First Trench and Forming a First Dielectric Layer Positioned Between the Protective Material Layer and the Substrate.

In some embodiments, a first dielectric layer and a protective material layer are respectively formed in the first trench, where the first dielectric layer is positioned between the protective material layer and the substrate, and an upper surface of the first dielectric layer is lower than that of the substrate, to expose a portion of a side wall of the first trench. It is to be understood that the first dielectric layer is positioned on a side wall of the first trench away from an opening, and a side wall of the first trench close to the opening is exposed and is not covered by the first dielectric layer. For example, the first dielectric layer may extend along the side wall of the first trench and cover a bottom of

the first trench, or may only cover the side wall of the first trench away from the opening.

S**106**: Forming a Second Dielectric Layer on the Exposed Side Wall of the First Trench.

A second dielectric layer is formed on the exposed side wall of the first trench, a second trench is formed between the second dielectric layer and the protective material layer, and the second dielectric layer is in contact with the first dielectric layer. In some embodiments, the second dielectric layer is formed on the side wall of the first trench close to the opening and not covered by the first dielectric layer, the second dielectric layer is in contact with the first dielectric layer positioned on the side wall of the first trench, and a void between the second dielectric layer and the protective material layer in the first trench is the second trench.

S**108**: Filling the Second Trench to Form a Work Function Structure.

In some embodiments, the second trench is filled to form a work function structure, and the work function structure includes a first work function layer and a second work function layer, where the second work function layer is positioned on an upper surface of the first work function layer, and a work function of the second work function layer is smaller than that of the first work function layer. The work function structure may be used as a gate structure of a transistor and a word line structure of a memory device, and the work function of the second work function structure is lower than that of the first work function layer.

In the method for fabricating a semiconductor structure, the first trench is formed in the substrate, the protective material layer is formed in the first trench, and the first dielectric layer is positioned between the protective material layer and the substrate. The second dielectric layer is positioned on the exposed side wall of the first trench and is in contact with the first dielectric layer, and the second trench is formed between the second dielectric layer and the protective material layer. The second trench is filled to form the work function structure, where the work function structure includes a first work function layer and a second work function layer positioned on the upper surface of the first work function layer, and the work function of the second work function layer is smaller than that of the first work function layer. Without changing a resistance, leakage current of the semiconductor structure using the work function structure as the gate structure is reduced, and electrical stability and performance of the semiconductor structure are improved.

FIG. **2** is a schematic flowchart of Step S**104** in an embodiment, FIG. **3** is a schematic flowchart of a method for fabricating a semiconductor structure in another embodiment, FIG. **4** is a schematic cross-sectional view of a semiconductor structure obtained after a metal silicide is formed in an embodiment, FIG. **5** is a schematic cross-sectional view of a semiconductor structure obtained after a protective material layer is formed in an embodiment corresponding to FIG. **4**, and FIG. **6** is a schematic cross-sectional view of a semiconductor structure obtained after a first dielectric layer is formed in an embodiment corresponding to FIG. **5**. As shown in FIG. **4**, FIG. **5** and FIG. **6**, as an example, Step S**104** includes following steps.

S**202**: Forming a First Dielectric Material Layer on an Inner Wall of the First Trench.

As shown in FIG. **4**, first, a substrate **102** is provided, where a first trench **104** is formed in the substrate **102**. Next, first dielectric material layers **106** are formed on a side wall and a bottom of the first trench **104**, where the first dielectric material layers **106** between the side walls of the first trench **104** are not in contact with each other. For example, a material for forming the first dielectric material layer **106** includes one or more of a nitride, an oxide, and an oxynitride, such as silicon dioxide, silicon nitride, and silicon oxynitride. For example, the material for forming the first dielectric material layer **106** is silicon dioxide.

As shown in FIG. **4**, as an example, the method for fabricating a semiconductor structure further includes: forming a barrier layer **108** on the substrate **102**. The substrate **102** (active pillar) between adjacent first trenches **104** may be isolated by means of the barrier layer **108**, thereby avoiding having a negative effect on the substrate **102** (active pillar) between the adjacent first trenches **104** during a subsequent process of forming a metal silicide. For example, a material for forming the barrier layer **108** includes one or more of a nitride, an oxide and an oxynitride, such as silicon dioxide, silicon nitride, and silicon oxynitride.

As an example, the method for fabricating a semiconductor structure further includes: forming a hard mask layer **110** on the substrate **102**. A shape and a position of the first trench **104** may be defined by means of the hard mask layer **110**, and the hard mask layer **110** may also serve as an isolation structure in the process of forming the metal silicide, thereby further avoiding having a negative effect on the substrate **102** (active pillar) between the adjacent first trenches **104** in the process of forming the metal silicide. For example, the hard mask layer **110** is formed on an upper surface of the barrier layer **108**. For example, a material for forming the hard mask layer **110** includes one or more of a nitride, an oxide and an oxynitride, such as silicon dioxide, silicon nitride, and silicon oxynitride. It is to be understood that the material for forming the hard mask layer **110** and the material for forming the barrier layer **108** may be same or may be different. For example, the material for forming the hard mask layer **110** is silicon nitride, and the material for forming the barrier layer **108** is silicon dioxide.

S**204**: Removing the First Dielectric Material Layer at a Bottom of the First Trench.

As shown in FIG. **4**, the first dielectric material layer **106** at the bottom of the first trench **104** is removed by means of an etching process. When the barrier layer **108** and/or the hard mask layer **110** are formed on the substrate **102**, the barrier layer **108** and/or the hard mask layer **110** may be used as an etch stop structure to avoid causing damage to the substrate **102** (active pillar) between the adjacent first trenches **104** in the etching process, thereby protecting the substrate **102**.

As shown in FIG. **3** and FIG. **4**, as an example, the substrate **102** includes a silicon substrate; a portion of the silicon substrate is exposed at the bottom of the first trench **104**, and after Step S**204**, the method further includes following steps.

S**302**: Implanting a First Metallic Material into the Bottom of the First Trench.

In some embodiments, the first metallic material is implanted into the exposed silicon substrate at the bottom of the first trench **104** by means of an ion implantation process, where an implantation angle, an implantation depth, and an implantation dose of the ion implantation process are set according to actual needs. For example, the first metallic material includes one or more of cobalt, tungsten, aluminum, and titanium.

S**304**: Performing an Annealing Process, Such that the First Metallic Material Reacts with the Silicon Substrate to Generate a Metal Silicide.

The annealing process such as a rapid thermal annealing process or an plasma annealing process is performed, such that the first metallic material implanted into the silicon substrate reacts with the silicon substrate to generate metal silicides **112**, where the metal silicides **112** at the bottoms of adjacent first trenches **104** are in contact with each other. In this way, a bit line structure **114** in the substrate is obtained. For example, Steps S**302**-S**304** of forming the metal silicide **112** (the bit line structure **114**) may be performed before Step S**202**.

S**206**: Filling the First Trench Up with the Protective Material Layer.

As shown in FIG. **5**, the first trench **104** is filled up with the protective material layer **116**, that is, a part of the first trench **104** where the first dielectric material layer **106** is not formed is filled up with the protective material layer **116**. Exemplarily, a material for forming the protective material layer **116** includes one or more of a nitride, an oxide and an oxynitride, such as silicon dioxide, silicon nitride, and silicon oxynitride. It is to be understood that a constituent material of at least one of the protective material layer **116**, the hard mask layer **110** and the barrier layer **108** is different from others, or the constituent materials thereof are different. For example, the constituent material of the protective material layer **116** is silicon nitride.

S**208**: Removing a Portion of the First Dielectric Material Layer Adjacent to the Surface of the Substrate, to Obtain the First Dielectric Layer.

As shown in FIG. **6**, a portion of the first dielectric material layer **106** adjacent to an upper surface of the substrate is removed by means of a dry etching process and/or a wet etching process, and a reserved portion of the first dielectric material layer **106** is a first dielectric layer **202**. It is to be understood that when the barrier layer **108** and/or the hard mask layer **110** are formed on the substrate **102**, the barrier layer **108** and/or the hard mask layer **110** protect the substrate **102** (active pillar) between the adjacent first trenches **104** during removal of the portion of the first dielectric material layer **106** adjacent to the upper surface of the substrate, while the barrier layer **108** and/or the hard mask layer **110** may be removed together with the portion of the first dielectric material layer **106** adjacent to the upper surface of the substrate, or may be removed after removal of the portion of the first dielectric material layer **106** adjacent to the upper surface of the substrate.

FIG. **7** is a schematic cross-sectional view of a semiconductor structure obtained after a second dielectric layer is formed in an embodiment corresponding to FIG. **6**. As shown in FIG. **7**, a second dielectric layer **118** is formed on a side wall of the first trench **104** where the first dielectric layer **202** is not formed, where the second dielectric layer **118** is in contact with the first dielectric layer **202**; and a second trench **120** is formed between the second dielectric layer **118** and the protective material layer **116**. That is, the second dielectric layer **118** does not fill up a void between the protective material layer **116** and the first trench **104**. For example, a material for forming the second dielectric layer **118** includes one or more of a nitride, an oxide and an oxynitride, such as silicon dioxide, silicon nitride, and silicon oxynitride. It is to be understood that the material for forming the second dielectric layer **118** may be the same as the material for forming the first dielectric layer **202**, or may be different from the material for forming the first dielectric layer **202**. For example, the second dielectric layer **118** extends along the side wall of the first trench **104** and covers the substrate **102**, thereby isolating the active pillar from an external environment.

With continued reference to FIG. **7**, as an example, the substrate **102** further includes active pillars positioned between adjacent first trenches **104**, the second dielectric layer **118** includes a first silicon oxide layer, and Step S**106** includes: growing the first silicon oxide layer on the side wall of the first trench **104** by means of thermal oxidation. Compared with other methods of forming the second dielectric layer **118**, the process of forming the second dielectric layer **118** by means of thermal oxidation has simple steps and convenient operation, thereby reducing production costs of the semiconductor structure.

With continued reference to FIG. **7**, as an example, an angle β between a bottom of the second dielectric layer **118** and a first direction is greater than 0° and less than or equal to 90°, where the first direction refers to a direction where the bottom of the first trench **104** points to an opening of the first trench **104**. In some embodiments, when a ratio of a distance D**1** between an upper surface of the first dielectric layer **202** and the opening of the first trench **104** in the first direction to a width W**1** of the first dielectric layer **202** in a second direction is less than or equal to a preset value, a difference value between a concentration of an oxidant on the upper surface of the first dielectric layer **202** and a concentration of the oxidant at a top of the first trench during the thermal oxidation may be ignored. In this case, a bottom of the second dielectric layer **118** is parallel to the second direction, and the angle β is equal to 90°, where the second direction refers to a direction of connecting lines between the adjacent first trenches **104**, and the second direction is perpendicular to the first direction. When the ratio of the distance D**1** between the upper surface of the first dielectric layer **202** and the opening of the first trench **104** in the first direction to the width W**1** of the first dielectric layer **202** in the second direction is greater than the preset value, the difference value between the concentration of the oxidant on the upper surface of the first dielectric layer **202** and the concentration of the oxidant at the top of the first trench during the thermal oxidation is relatively large. In this case, a bottom width of the second dielectric layer **118** is smaller than a top width of the second dielectric layer **118**, where the width here refers to the width of the second dielectric layer along the second direction, and a tilt angle β between the bottom of the second dielectric layer **118** and the first direction is greater than 0° and less than 90°.

FIG. **8** is a schematic flowchart of Step S**108** in an embodiment; FIG. **9** is a schematic cross-sectional view of a semiconductor structure obtained after a first work function material layer is formed in an embodiment corresponding to FIG. **7**; FIG. **10** is a schematic cross-sectional view of a semiconductor structure obtained after a first work function structure is formed in an embodiment corresponding to FIG. **9**; FIG. **11** is a schematic cross-sectional view of a semiconductor structure obtained after a second work function material layer is formed in an embodiment corresponding to FIG. **10**; and FIG. **12** is a schematic cross-sectional view of a semiconductor structure obtained after a second work function layer is formed in an embodiment corresponding to FIG. **11**. As shown in FIG. **8**, FIG. **9**, FIG. **10**, FIG. **11** and FIG. **12**, as an example, Step S**108** includes following steps.

S**402**: Filling the Second Trench Up with a First Work Function Material Layer.

As shown in FIG. **9**, the second trench **120** is filled up with a first work function material layer **122**. For example, an upper surface of the first work function material layer **122** is higher than or equal to the upper surface of the substrate **102**.

S404: Removing a Redundant Portion of the First Work Function Material Layer to Obtain a First Work Function Structure Whose Upper Surface is Lower than the Upper Surface of the Substrate.

As shown in FIG. **10**, a redundant portion of the first work function material layer **122** in the second trench **120** is removed by means of an etching process to obtain a first work function structure **204** formed by a remaining portion of the first work function material layer **122** in the second trench **120**, and an upper surface of the first work function structure **204** is lower than the upper surface of the substrate **102**. It is to be understood that when the upper surface of the first work function material layer **122** is higher than or equal to the upper surface of the substrate **102**, the first work function material layer **122** positioned on the substrate **102** may be completely removed while a redundant portion of the first work function material layer **122** in the second trench **120** is removed, or a portion of the first work function material layer **122** positioned on the substrate **102** may be removed while a redundant portion of the first work function material layer **122** in the second trench **120** is removed, and then a remaining portion of the first work function material layer **122** on the substrate **102** is removed after the first work function structure **204** is formed.

S406: Forming, on the Upper Surface of the First Work Function Structure, a Second Work Function Material Including a Second Metallic Material.

As shown in FIG. **11**, a second work function material layer **124** is formed on the upper surface of the first work function structure **204**, where the second work function material layer **124** includes a second metallic material. That is, the second work function material layer **124** fills up the second trench **120** where the first work function structure **204** is not formed. A height T**1** of the second work function material layer **124** in the first direction only needs to meet a requirement for subsequent formation of the work function structure. As an example, the upper surface of the second work function material layer **124** is not lower than the upper surface of the substrate **102**. That is, the upper surface of the second work function material layer **124** is higher than the upper surface of the substrate **102**, or the upper surface of the second work function material layer **124** is flush with the upper surface of the substrate **102**.

S408: Performing an Annealing Process Such that the Second Metallic Material Diffuses into an Upper Portion of the First Work Function Structure to Obtain the First Work Function Layer and the Second Work Function Layer.

As shown in FIG. **12**, an annealing process (a heat treatment process such as a rapid annealing process or a plasma annealing process) is performed, such that the second metallic material in the second work function material layer **124** diffuses into an upper portion of the first work function structure **204** to form a second work function layer **206** and obtain a first work function layer **208** formed from a remaining portion of the first work function structure **204**. That is, the portion of the first work function structure **204** diffused by the second metallic material forms the second work function layer **206**, and the remaining portion thereof is the first work function layer **208**.

FIG. **13** is a schematic cross-sectional view of a semiconductor structure obtained after an isolation material layer is formed in an embodiment. As shown in FIG. **13**, as an example, after Step S**408**, the method further includes: removing the second work function material layer **124** on an upper surface of the second work function layer **206**.

FIG. **14** is a schematic cross-sectional view of a semiconductor structure obtained after an isolation material layer is formed in another embodiment. As shown in FIG. **14**, as an example, the work function structure **126** further includes a third work function layer **210** positioned on the upper surface of the second work function layer **206**. After Step S**408**, the method further includes: removing a portion of the second work function material layer **124** on the upper surface of the second work function layer **206** to obtain the third work function layer **210** formed from a remaining portion of the second work function material layer **124**, where the work function of the third work function layer **210** is smaller than that of the second work function layer **206**. By means of this setting, the work function of the work function structure **126** may be further reduced, such that the leakage current of the semiconductor structure using the work function structure **126** as a gate structure is further reduced, and the electrical stability and the performance of the semiconductor structure are improved. For example, an upper surface of the third work function layer **210** is lower than the upper surface of the substrate **102**.

As an example, the first work function material layer **122** includes a third metallic material, and a work function of the third metallic material is greater than that of the second metallic material.

As an example, the third metallic material includes titanium, and the second metallic material includes at least one of lanthanum, zirconium, hafnium, and aluminum.

As an example, the first work function material layer **122** includes a titanium nitride material layer, and the second work function material layer **124** includes a lanthanum oxide material layer or a zirconia material layer.

As shown in FIG. **13**, as an example, in the first direction, a height T**2** of the second work function layer **206** is greater than or equal to a height T**3** of the first work function layer **208**. The work function of the second work function layer **206** is smaller than that of the first work function layer **208**. Under the condition that a height of the work function structure **126** in the first direction remains unchanged, the work function of the work function structure **126** may be reduced by increasing the height T**2** of the second work function layer **206**, thereby improving the electrical stability and the performance of the semiconductor structure. For example, a ratio of the height T**2** to the height T**3** is greater than or equal to 1 and less than or equal to 2, such as 1, 1.3, 1.5, 1.7, 1.9, and 2.0.

As shown in FIG. **14**, as an example, in the first direction, a height T**4** of the third work function layer **210** is greater than or equal to the height T**2** of the second work function layer **206**, and the height T**4** of the third work function layer **210** is greater than or equal to the height T**3** of the first work function layer **208**. The work function of the third work function layer **210** is smaller than the work function of the second work function layer **206** and is smaller than the work function of the first work function layer **208**. Under the condition that the height of the work function structure **126** in the first direction remains unchanged, the work function of the work function structure **126** may be reduced by increasing the height T**4** of the third work function layer **210**, thereby improving the electrical stability and the performance of the semiconductor structure.

As shown in FIG. **13** and FIG. **14**, as an example, the upper surface of the work function structure **126** is lower than the upper surface of the substrate **102**, and after the filling the second trench **120** to form a work function structure **126**, the method further includes: forming an isolation material layer **128** on an upper surface of the work function structure **126**, where an upper surface of the isolation material layer **128** is not lower than the upper surface

of the substrate **102**. The isolation structure layer **128** can isolate the work function structure **126**, thereby eliminating adverse effects of external environment on the work function structure **126**.

As an example, the isolation material layer **128** and the protective material layer **116** are formed from the same material.

With continued reference to FIG. **14**, as an example, the method for fabricating a semiconductor structure further includes: forming a source region and a drain region in the active pillar between the adjacent first trenches **104**, where the active pillar between the work function structures **126** positioned in the adjacent first trenches **104** is a drift region **212**, and a first portion **214** between the drift region **212** and the bit line structure **114** and a second portion **216** between the drift region **212** and the upper surface of the substrate **102** are respectively the source region and the drain region. For example, the first portion **214** between the drift region **212** and the bit line structure **114** is the drain region, and the second portion **216** between the drift region **212** and the upper surface of the substrate **102** is the source region. It is to be understood that the source region and the drain region may be formed before the work function structure **126** is formed, or may be formed after the work function structure **126** is formed, which is not limited here.

As an example, the method for fabricating a semiconductor structure further includes: forming a capacitor structure on the isolation material layer **128**, where the capacitor structure is electrically connected to the work function structure **126** by means of a conductive structure penetrating through the isolation material layer **128** (not shown in the figure).

It is to be understood that although the various steps in the flowcharts of FIG. **1**, FIG. **2**, FIG. **3** and FIG. **8** are displayed in sequence as indicated by the arrows, these steps are not necessarily performed in sequence in the order indicated by the arrows. Unless expressly stated herein, the execution of these steps is not strictly restrictive and may be performed in other order. Moreover, at least some of the steps in FIG. **1**, FIG. **2**, FIG. **3** and FIG. **8** may include a plurality of sub-steps or a plurality of stages, which are not necessarily performed at the same moment, but may be executed at different moments, and the order of execution of these sub-steps or stages is not necessarily performed sequentially, but may be performed alternately or alternately with at least a portion of the sub-steps or stages of other steps or other steps.

As shown in FIG. **4**, FIG. **7** and FIG. **13**, the present disclosure further provides a semiconductor structure, which includes: a substrate **102**, a protective material layer **116**, a first dielectric layer **202**, a second dielectric layer **118**, and a work function structure **126**. A first trench **104** is formed in the substrate **102**, the protective material layer **116** is positioned in the first trench **104**, and the first dielectric layer **202** is positioned on a side wall of the first trench **104** and is positioned between the protective material layer **116** and the substrate **102**. The second dielectric layer **118** is positioned on the side wall of the first trench **102**, and the second dielectric layer **118** is in contact with the first dielectric layer **202** and is positioned between the protective material layer **116** and the substrate **102**, and a second trench **120** is provided between the second dielectric layer **118** and the protective material layer **116**. The work function structure **126** is positioned in the second trench **120**, and the work function structure **126** includes a first work function layer **208** and a second work function layer **206**, where the second work function layer **206** is positioned on an upper surface of the first work function layer **208**, and a work function of the second work function layer **206** is smaller than that of the first work function layer **208**.

In some embodiments, the substrate **102** may use undoped single crystal silicon, single crystal silicon doped with impurities, silicon-on-insulator (SOI), stacked silicon-on-insulator (SSOI), stacked silicon-germanium-on-insulator (S—SiGeOI), silicon-germanium-on-insulator (SiGeOI), and germanium-on-insulator (GeOI), etc. As an example, in this embodiment, a material for forming the substrate **102** is single crystal silicon. The first dielectric layer **202** is positioned between the protective material layer **116** and the substrate **102**, and the upper surface of the first dielectric layer **202** is lower than the upper surface of the substrate **102**, thereby exposing part of the side wall of the first trench **104**. It is to be understood that the first dielectric layer **202** is positioned on a side wall of the first trench **104** away from the opening, and a side wall of the first trench **104** close to the opening is exposed and is not covered by the first dielectric layer **202**. Exemplarily, the first dielectric layer **202** may extend along the side wall of the first trench **104** to cover the bottom of the first trench **104**, or may only cover the side wall of the first trench **104** away from the opening. The second dielectric layer **118** is positioned on the side wall of the first trench **104** near the opening and not covered by the first dielectric layer **202**, and the second dielectric layer **118** is in contact with the first dielectric layer **202** positioned on the side wall of the first trench **104**, where a void between the second dielectric layer **118** and the protective material layer **116** in the first trench **104** is the second trench **120**. The work function structure **126** is positioned in the second trench **120**, and the work function structure **126** may be used as a gate structure of a transistor or a word line structure of a memory device, where the work function of the second work function layer **206** is smaller than that of the first work function layer **208**.

In the above semiconductor structure, a first trench is formed in a substrate, a protective material layer is formed in the first trench, and a first dielectric layer is positioned between the protective material layer and the substrate. A second dielectric layer is positioned on an exposed side wall of the first trench and is in contact with the first dielectric layer, and a second trench is formed between the second dielectric layer and the protective material layer. A work function structure is positioned in the second trench, where the work function structure includes a first work function layer and a second work function layer positioned on an upper surface of the first work function layer, and a work function of the second work function layer is smaller than a work function of the first work function layer. Without changing a resistance, leakage current of the semiconductor structure using the work function structure as a gate structure is reduced, and electrical stability and performance of the semiconductor structure are improved.

For example, a material for forming the first dielectric material layer **202** includes one or more of a nitride, an oxide, and an oxynitride, such as silicon dioxide, silicon nitride, and silicon oxynitride. For example, the material for forming the first dielectric material layer **202** is silicon dioxide.

As shown in FIG. **4**, as an example, the semiconductor structure further includes: a barrier layer **108** on the substrate **102**. The substrate **102** (active pillar) between adjacent first trenches **104** may be isolated by means of the barrier layer **108**, thereby avoiding having a negative effect on the substrate **102** (active pillar) between the adjacent first trenches **104** during a subsequent process of forming a metal

silicide. For example, a material for forming the barrier layer **108** includes one or more of a nitride, an oxide and an oxynitride, such as silicon dioxide, silicon nitride, and silicon oxynitride.

As an example, the semiconductor structure further includes a hard mask layer **110** positioned on the substrate **102**. A shape and a position of the first trench **104** may be defined by means of the hard mask layer **110**, and the hard mask layer **110** may also serve as an isolation structure in the process of forming the metal silicide, thereby further avoiding having a negative effect on the substrate **102** (active pillar) between the adjacent first trenches **104** in the process of forming the metal silicide. For example, the hard mask layer **110** is formed on an upper surface of the barrier layer **108**. For example, a material for forming the hard mask layer **110** includes one or more of a nitride, an oxide, and an oxynitride, such as silicon dioxide, silicon nitride, and silicon oxynitride. It is to be understood that the material for forming the hard mask layer **110** and the material for forming the barrier layer **108** may be same or may be different. For example, the material for forming the hard mask layer **110** is silicon nitride, and the material for forming the barrier layer **108** is silicon dioxide.

In one embodiment, the substrate **102** includes a silicon substrate, and the bottom of the first trench **104** exposes a part of the silicon substrate. The semiconductor structure further includes metal silicides **112** positioned at the bottom of the first trench **104**, where the metal silicides **112** at the bottoms of adjacent two first trenches **104** are in contact with each other, thereby obtaining the bit line structure **114** in the substrate. Exemplarily, a first metal material in the metal silicide **112** includes one or more of cobalt, tungsten, aluminum, and titanium.

As an example, a material for forming the protective layer **116** includes one or more of a nitride, an oxide and an oxynitride, such as silicon dioxide, silicon nitride, and silicon oxynitride. It is to be understood that a constituent material of at least one of the protective material layer **116**, the hard mask layer **110** and the barrier layer **108** is different from others, or the constituent materials thereof are different. For example, the constituent material of the protective material layer **116** is silicon nitride.

As an example, a material for forming the second dielectric layer **118** includes one or more of a nitride, an oxide and an oxynitride, such as silicon dioxide, silicon nitride, and silicon oxynitride. It is to be understood that the material for forming the second dielectric layer **118** may be the same as the material for forming the first dielectric layer **202**, or may be different from the material for forming the first dielectric layer **202**. For example, the second dielectric layer **118** extends along the side wall of the first trench **104** and covers the substrate **102**, thereby isolating the active pillar from an external environment.

As shown in FIG. **7**, as an example, an angle between a bottom of the second dielectric layer **118** and a first direction is greater than 0° and less than or equal to 90°, where the first direction refers to a direction where the bottom of the first trench **104** points to an opening of the first trench **104**. In some embodiments, when a ratio of a distance D**1** between an upper surface of the first dielectric layer **202** and the opening of the first trench **104** in the first direction to a width W**1** of the first dielectric layer **202** in a second direction is less than or equal to a preset value, a difference value between a concentration of an oxidant on the upper surface of the first dielectric layer **202** and a concentration of the oxidant at a top of the first trench during the thermal oxidation may be ignored. In this case, a bottom of the second dielectric layer **118** is parallel to the second direction, and the angle β is equal to 90°, where the second direction refers to a direction of connecting lines between the adjacent first trenches **104**, and the second direction is perpendicular to the first direction. When the ratio of the distance D**1** between the upper surface of the first dielectric layer **202** and the opening of the first trench **104** in the first direction to the width W**1** of the first dielectric layer **202** in the second direction is greater than the preset value, the difference value between the concentration of the oxidant on the upper surface of the first dielectric layer **202** and the concentration of the oxidant at the top of the first trench during the thermal oxidation is relatively large. In this case, a bottom width of the second dielectric layer **118** is smaller than a top width of the second dielectric layer **118**, where the width here refers to the width of the second dielectric layer along the second direction, and a tilt angle β between the bottom of the second dielectric layer **118** and the first direction is greater than 0° and less than 90°.

As an example, the second work function layer **206** includes a second metallic material, and the first work function layer **208** includes a third metallic material, where the work function of the third metallic material is greater than that of the second metallic material.

As an example, the third metallic material includes titanium, and the second metallic material includes at least one of lanthanum, zirconium, hafnium, and aluminum.

As shown in FIG. **14**, as an example, the work function structure **126** further includes a third work function layer **210**, and the third work function layer **210** is positioned on the upper surface of the second work function layer **206** where the third work function layer **210** includes the second metallic material. A work function of the third work function layer **210** is smaller than that of the second work function layer **206**. By means of this setting, the work function of the work function structure **126** may be further reduced, such that the leakage current of the semiconductor structure using the work function structure **126** as a gate structure is further reduced, and the electrical stability and the performance of the semiconductor structure are improved. For example, an upper surface of the third work function layer **210** is lower than the upper surface of the substrate **102**.

As an example, the first work function layer **208** includes a titanium nitride layer, and the third work function layer **206** includes a lanthanum oxide layer or a zirconium oxide layer.

As shown in FIG. **13**, as an example, in the first direction, a height T**2** of the second work function layer **206** is greater than or equal to a height T**3** of the first work function layer **208**. The work function of the second work function layer **206** is smaller than that of the first work function layer **208**. Under the condition that a height of the work function structure **126** in the first direction remains unchanged, the work function of the work function structure **126** may be reduced by increasing the height T**2** of the second work function layer **206**, thereby improving the electrical stability and the performance of the semiconductor structure. For example, a ratio of the height T**2** to the height T**3** is greater than or equal to 1 and less than or equal to 2, such as 1, 1.3, 1.5, 1.7, 1.9, and 2.0.

As shown in FIG. **14**, as an example, in the first direction, a height T**4** of the third work function layer **210** is greater than or equal to the height T**2** of the second work function layer **206**, and the height T**4** of the third work function layer **210** is greater than or equal to the height T**3** of the first work function layer **208**. The work function of the third work function layer **210** is smaller than the work function of the

second work function layer **206** and is smaller than the work function of the first work function layer **208**. Under the condition that the height of the work function structure **126** in the first direction remains unchanged, the work function of the work function structure **126** may be reduced by increasing the height T**4** of the third work function layer **210**, thereby improving the electrical stability and the performance of the semiconductor structure.

As shown in FIG. **13** and FIG. **14**, as an example, the upper surface of the work function structure **216** is lower than the upper surface of the substrate. The semiconductor structure further includes an isolation material layer **128** positioned on the upper surface of the work function structure **126**, where the upper surface of the isolation material layer **128** is not lower than the upper surface of the substrate **102**. The isolation structure layer **128** can isolate the work function structure **126**, thereby eliminating adverse effects of external environment on the work function structure **126**.

As an example, the isolation material layer **128** and the protective material layer **116** are formed from the same material.

With continued reference to FIG. **14**, as an example, the semiconductor structure further includes a source region and a drain region, both positioned in the active pillar between the adjacent first trenches **104**, where the active pillar between the work function structures **126** positioned in the adjacent first trenches **104** is a drift region **212**, and a first portion **214** between the drift region **212** and the bit line structure **114** and a second portion **216** between the drift region **212** and the upper surface of the substrate **102** are respectively the source region and the drain region. For example, the first portion **214** between the drift region **212** and the bit line structure **114** is the drain region, and the second portion **216** between the drift region **212** and the upper surface of the substrate **102** is the source region.

As an example, the semiconductor structure further includes a capacitor structure positioned on the isolation material layer **128**, where the capacitor structure is electrically connected to the work function structure **126** by means of a conductive structure penetrating through the isolation material layer **128** (not shown in the figure).

As an example, the semiconductor structure includes a transistor or memory device.

The embodiments in the specification are described in a progressive manner. Each embodiment is focused on difference from other embodiments. And cross reference is available for identical or similar parts among different embodiments.

Technical features of the above embodiments may be arbitrarily combined. For simplicity, all possible combinations of the technical features in the above embodiments are not described. However, as long as the combination of these technical features is not contradictory, it shall be deemed to be within the scope recorded in this specification.

The above embodiments merely express several implementations of the embodiments of the present disclosure, and descriptions thereof are relatively concrete and detailed. However, these embodiments are not thus construed as limiting the patent scope of the present disclosure. It is to be pointed out that for persons of ordinary skill in the art, some modifications and improvements may be made under the premise of not departing from a conception of the embodiments of the present disclosure, which shall be regarded as falling within the scope of protection of the embodiments of the present disclosure. Thus, patent protection scope of the embodiments of the present disclosure shall be subject to the appended claims.

What is claimed is:

1. A semiconductor structure, comprising:

a substrate, a first trench being formed in the substrate;

a protective material layer positioned in the first trench;

a first dielectric layer positioned on a side wall of the first trench and between the protective material layer and the substrate;

a second dielectric layer positioned on the side wall of the first trench, the second dielectric layer being in contact with the first dielectric layer and positioned between the protective material layer and the substrate, a second trench being provided between the second dielectric layer and the protective material layer; and

a work function structure positioned in the second trench, the work function structure comprising a first work function layer and a second work function layer;

wherein the second work function layer is positioned on an upper surface of the first work function layer, and a work function of the second work function layer is smaller than a work function of the first work function layer.

2. The semiconductor structure according to claim **1**, wherein

an angle between a bottom of the second dielectric layer and a first direction is greater than 0° and less than or equal to 90°, the first direction referring to a direction where a bottom of the first trench points to an opening of the first trench.

3. The semiconductor structure according to claim **1**, wherein

the second work function layer comprises a second metallic material, the first work function layer comprising a third metallic material, a work function of the third metallic material being greater than a work function of the second metallic material.

4. The semiconductor structure according to claim **3**, wherein

the third metallic material comprises titanium, the second metallic material comprising at least one of lanthanum, zirconium, hafnium, and aluminum.

5. The semiconductor structure according to claim **3**, wherein

the work function structure further comprises:

a third work function layer positioned on an upper surface of the second work function layer, wherein the third work function layer comprises the second metallic material.

6. The semiconductor structure according to claim **1**, wherein

an upper surface of the work function structure is lower than an upper surface of the substrate, the semiconductor structure further comprising:

an isolation material layer positioned on the upper surface of the work function structure, an upper surface of the isolation material layer being not lower than the upper surface of the substrate.

7. The semiconductor structure according to claim **1**, wherein

a height of the second work function layer is greater than or equal to a height of the first work function layer.

* * * * *