US012402691B2

(12) **United States Patent**
Campos, II et al.

(10) **Patent No.: US 12,402,691 B2**
(45) **Date of Patent: Sep. 2, 2025**

(54) **SOLE STRUCTURE FOR ARTICLE OF FOOTWEAR**

(71) Applicant: **NIKE, Inc.**, Beaverton, OR (US)

(72) Inventors: **Fidencio Campos, II**, Dallas, OR (US); **Zachary M. Elder**, Portland, OR (US); **Jordyn Klumpp**, Portland, OR (US); **Eric Y. Lee**, Beaverton, OR (US); **Fiona L. Lesecq**, Beaverton, OR (US); **Damian R. Manspeaker**, Beaverton, OR (US); **Roger Paul Murphy**, Beaverton, OR (US); **Sebastian Tesche**, Portland, OR (US)

(73) Assignee: **NIKE, Inc.**, Beaverton, OR (US)

(*) Notice: Subject to any disclaimer, the term of this patent is extended or adjusted under 35 U.S.C. 154(b) by 0 days.

(21) Appl. No.: **18/518,776**

(22) Filed: **Nov. 24, 2023**

(65) **Prior Publication Data**

US 2024/0081478 A1 Mar. 14, 2024

Related U.S. Application Data

(63) Continuation of application No. 17/330,333, filed on May 25, 2021, now Pat. No. 11,877,620.
(Continued)

(51) **Int. Cl.**
A43B 13/20 (2006.01)
A43B 13/18 (2006.01)

(52) **U.S. Cl.**
CPC ***A43B 13/20*** (2013.01); ***A43B 13/18*** (2013.01); ***A43B 13/186*** (2013.01)

(58) **Field of Classification Search**
CPC A43B 13/20; A43B 13/18; A43B 13/185; A43B 13/186
(Continued)

(56) **References Cited**

U.S. PATENT DOCUMENTS

4,616,431 A 10/1986 Dassler
5,092,060 A 3/1992 Franchey
(Continued)

FOREIGN PATENT DOCUMENTS

WO WO-2021242372 A1 * 12/2021 ..... A43B 13/023

OTHER PUBLICATIONS

European Patent Office, PCT International Search Report/Written Opinion for application PCT/US2021/034149 dated Aug. 27, 2021.
(Continued)

Primary Examiner — Marie D Bays
(74) *Attorney, Agent, or Firm* — Honigman LLP; Matthew H. Szalach; Jonathan P. O'Brien

(57) **ABSTRACT**

A sole structure for an article of footwear includes a chassis and a cushioning arrangement. The chassis includes a recess formed between a first surface and a second surface facing the first surface. The cushioning arrangement includes a first cushioning element protruding from the first surface and including a first plurality of lobes and a second cushioning element protruding from the second surface and including a second plurality of lobes contacting the first plurality of lobes. At least one of the first cushioning element and the second cushioning element may include a fluid-filled bladder. A first side of each cushioning element includes a substantially planar base and a second side of each cushioning element includes the lobes formed on an opposite side from the base. The base of each cushioning element is attached to a respective one of the surfaces of the recess.

20 Claims, 25 Drawing Sheets

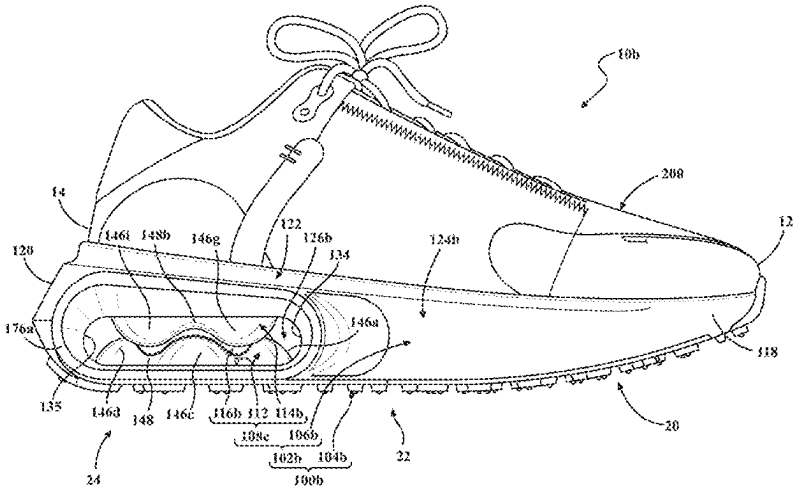

Related U.S. Application Data

(60) Provisional application No. 63/032,690, filed on May 31, 2020.

(58) **Field of Classification Search**
USPC ..... 36/35 R, 37
See application file for complete search history.

(56) **References Cited**

U.S. PATENT DOCUMENTS

5,311,674 A * 5/1994 Santiyanont ..... A43B 13/181 36/35 R
5,331,750 A * 7/1994 Sasaki F16F 1/376 267/80
5,343,639 A 9/1994 Kilgore
5,901,467 A 5/1999 Peterson
6,029,962 A * 2/2000 Shorten B29C 66/1312 267/145
6,402,879 B1 6/2002 Tawney
6,487,796 B1 12/2002 Avar
7,685,743 B2 * 3/2010 Swigart ..... A43B 13/181 36/35 R
7,877,898 B2 2/2011 Aveni et al.
9,456,658 B2 * 10/2016 Bruce A43B 13/181
11,877,620 B2 * 1/2024 Campos, II A43B 13/186
2001/0052194 A1 * 12/2001 Nishiwaki ..... A43B 13/185 36/35 R
2003/0208929 A1 11/2003 Lucas et al.
2004/0194347 A1 10/2004 Aveni
2004/0261292 A1 * 12/2004 Aveni A43B 7/1469 36/114
2005/0028403 A1 2/2005 Swigart et al.
2005/0133968 A1 6/2005 Foxen
2006/0179683 A1 * 8/2006 Weiss ..... A43B 1/0027 36/35 R
2007/0033831 A1 2/2007 Aveni
2007/0277396 A1 12/2007 Swigart
2008/0184595 A1 8/2008 Schindler et al.
2008/0209762 A1 * 9/2008 Krafsur ..... A43B 7/1425 36/35 R
2009/0100705 A1 * 4/2009 Cook A43B 13/12 36/28
2010/0107444 A1 * 5/2010 Aveni ..... A43B 13/189 36/35 B
2012/0102782 A1 * 5/2012 Swigart ..... A43B 13/18 12/146 B
2012/0304501 A1 * 12/2012 Song ..... B29D 35/122 36/25 R
2014/0075777 A1 3/2014 Bruce et al.
2015/0033577 A1 2/2015 Dahl
2017/0035146 A1 2/2017 Peyton
2018/0213886 A1 8/2018 Connell et al.
2019/0003549 A1 * 1/2019 Dahl B32B 27/08
2020/0154826 A1 5/2020 Case et al.
2020/0245718 A1 8/2020 Lesecq
2021/0030112 A1 2/2021 Amoako et al.
2021/0145117 A1 * 5/2021 Montross A43B 13/20
2021/0368920 A1 * 12/2021 Elder A43B 13/023
2021/0368921 A1 * 12/2021 Campos, II A43B 13/189
2022/0022598 A1 * 1/2022 Case A43B 13/203
2022/0160078 A1 * 5/2022 Lesecq B29D 35/142
2022/0218067 A1 * 7/2022 Montross A43B 13/181
2023/0380545 A1 * 11/2023 Case B32B 7/02

OTHER PUBLICATIONS

USPTO, Non-Final Office Action for U.S. Appl. No. 17/330,333, mailed Feb. 24, 2023.
USPTO, Final Office Action for U.S. Appl. No. 17/330,333, mailed Jun. 5, 2023.

* cited by examiner

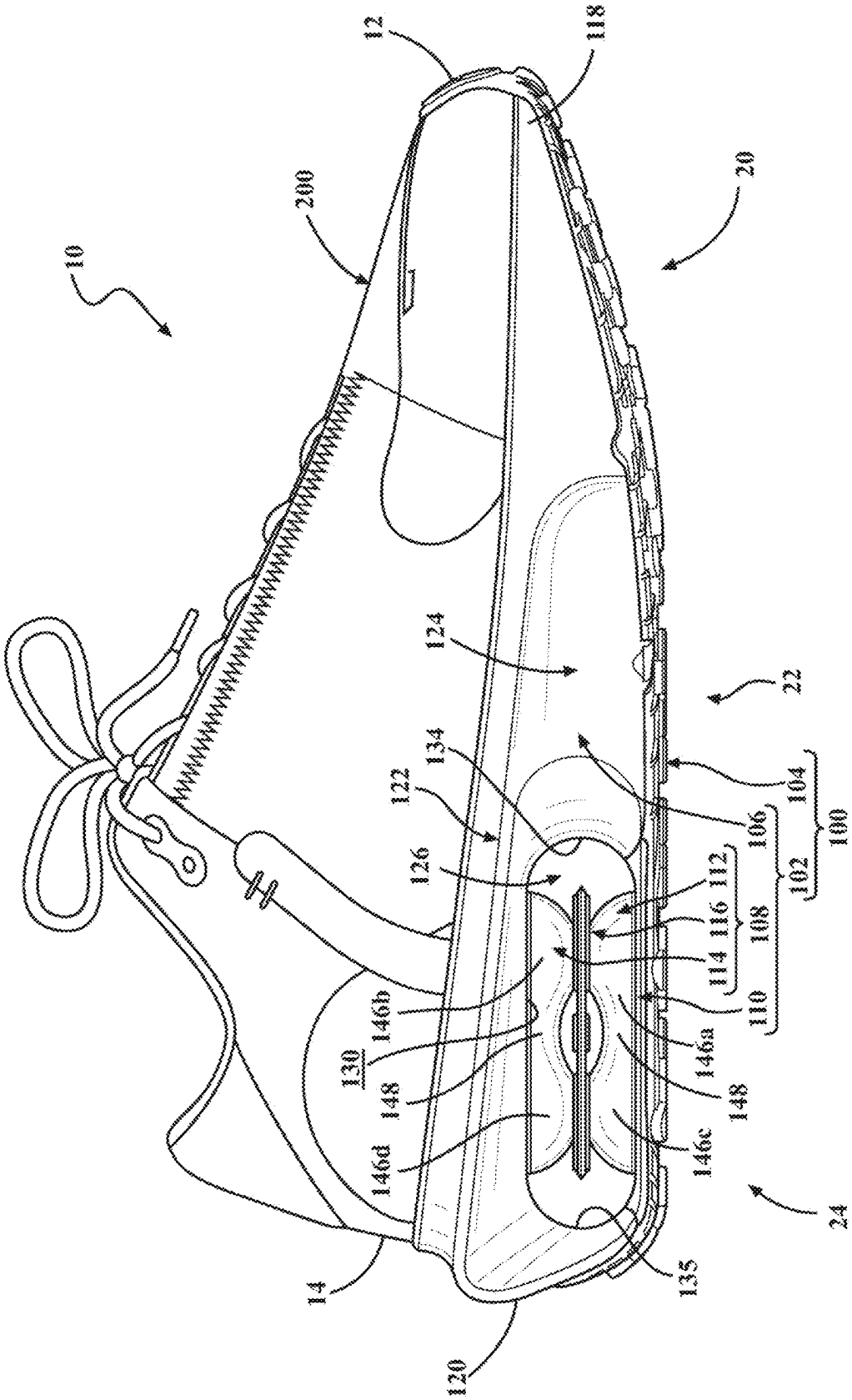
10
12
118
200
20
124
22
134
122
104
106
100
102
126
112
116
108
114
110
146b
130
148
146a
148
146d
146c
24
14
135
120

FIG. 1

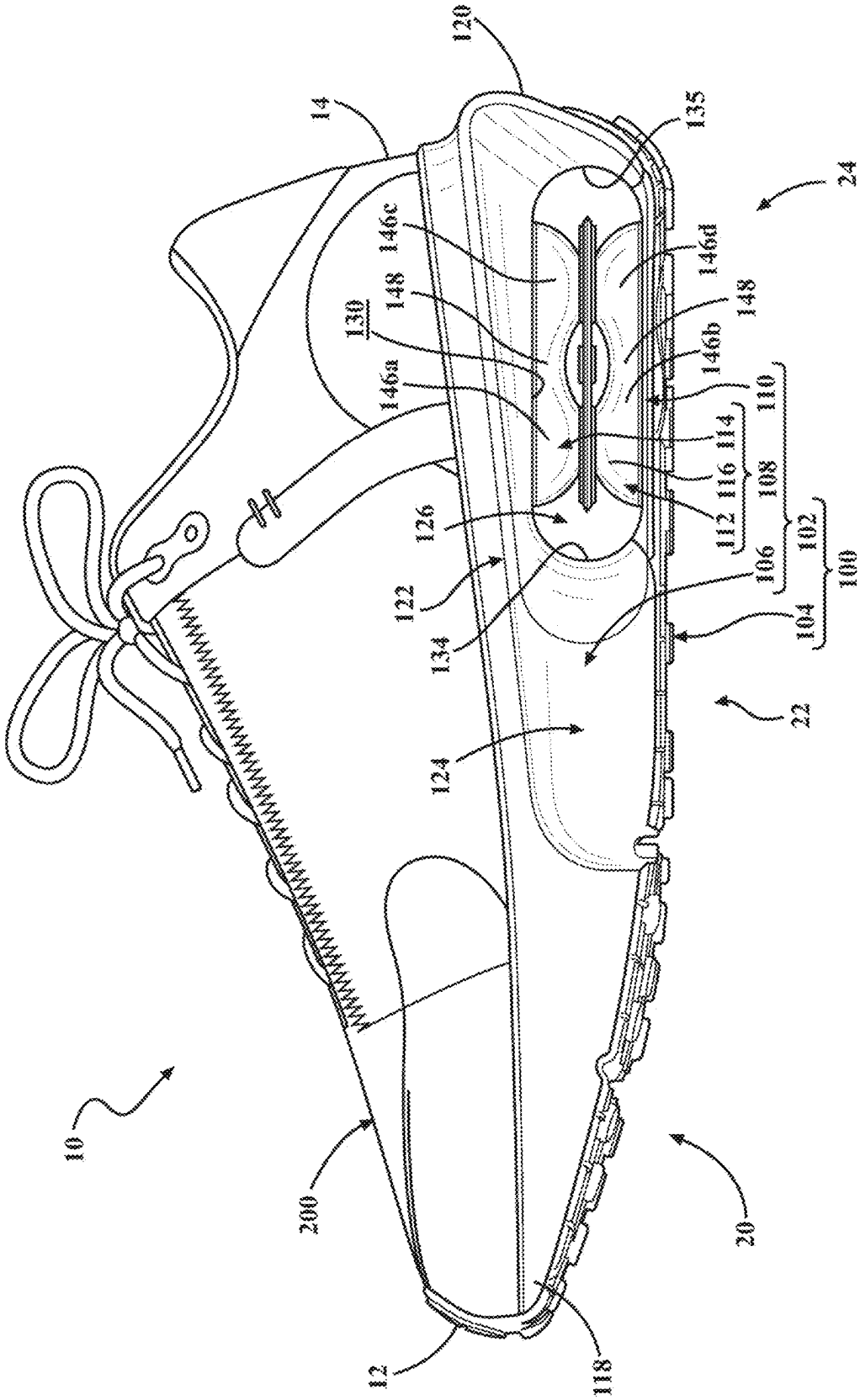
120
14
135
24
146c
146d
148
130
148
146b
146a
110
114
116
108
112
102
126
106
100
122
104
134
22
124
10
200
20
12
118

FIG. 2

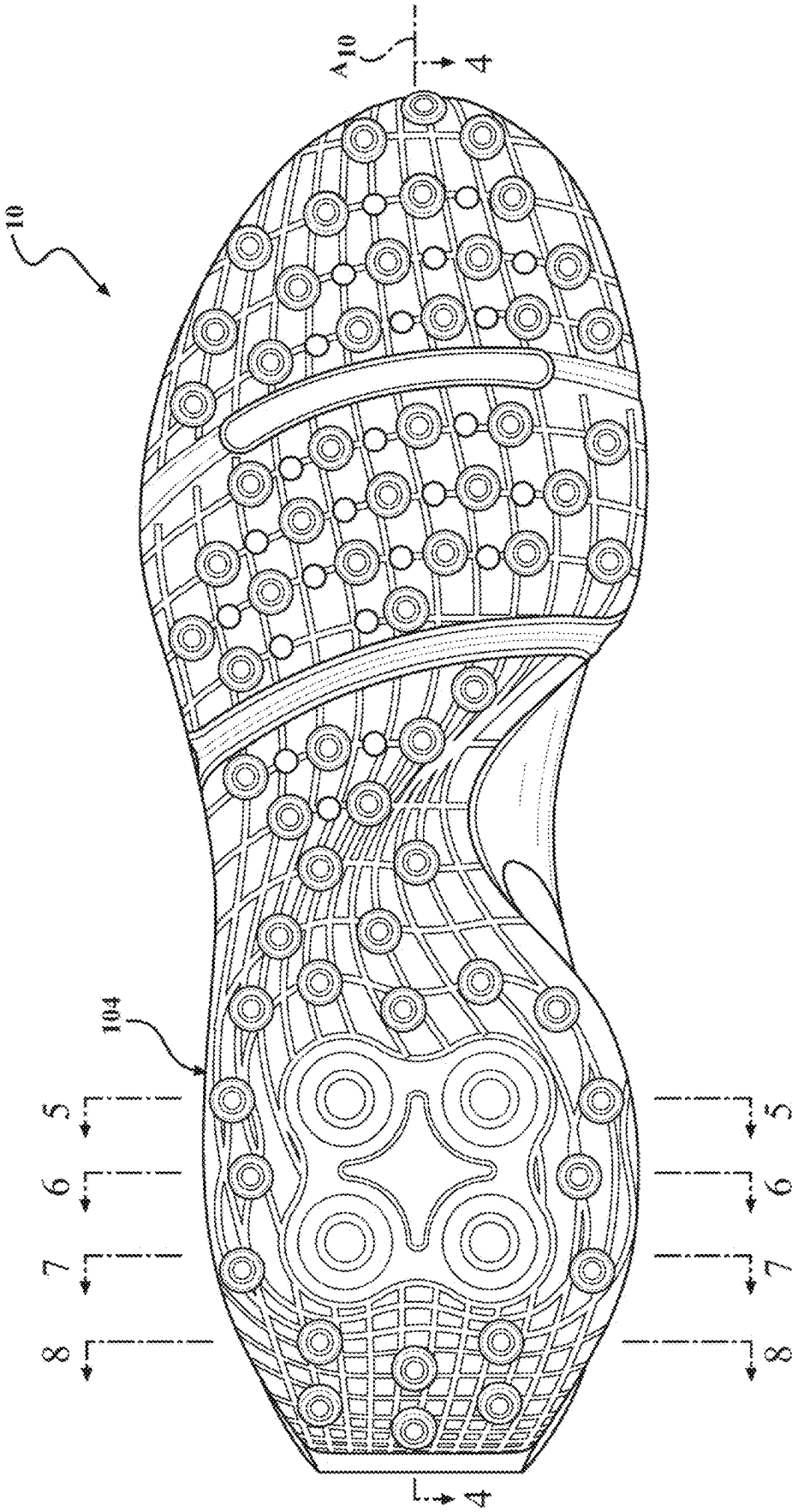

FIG. 3

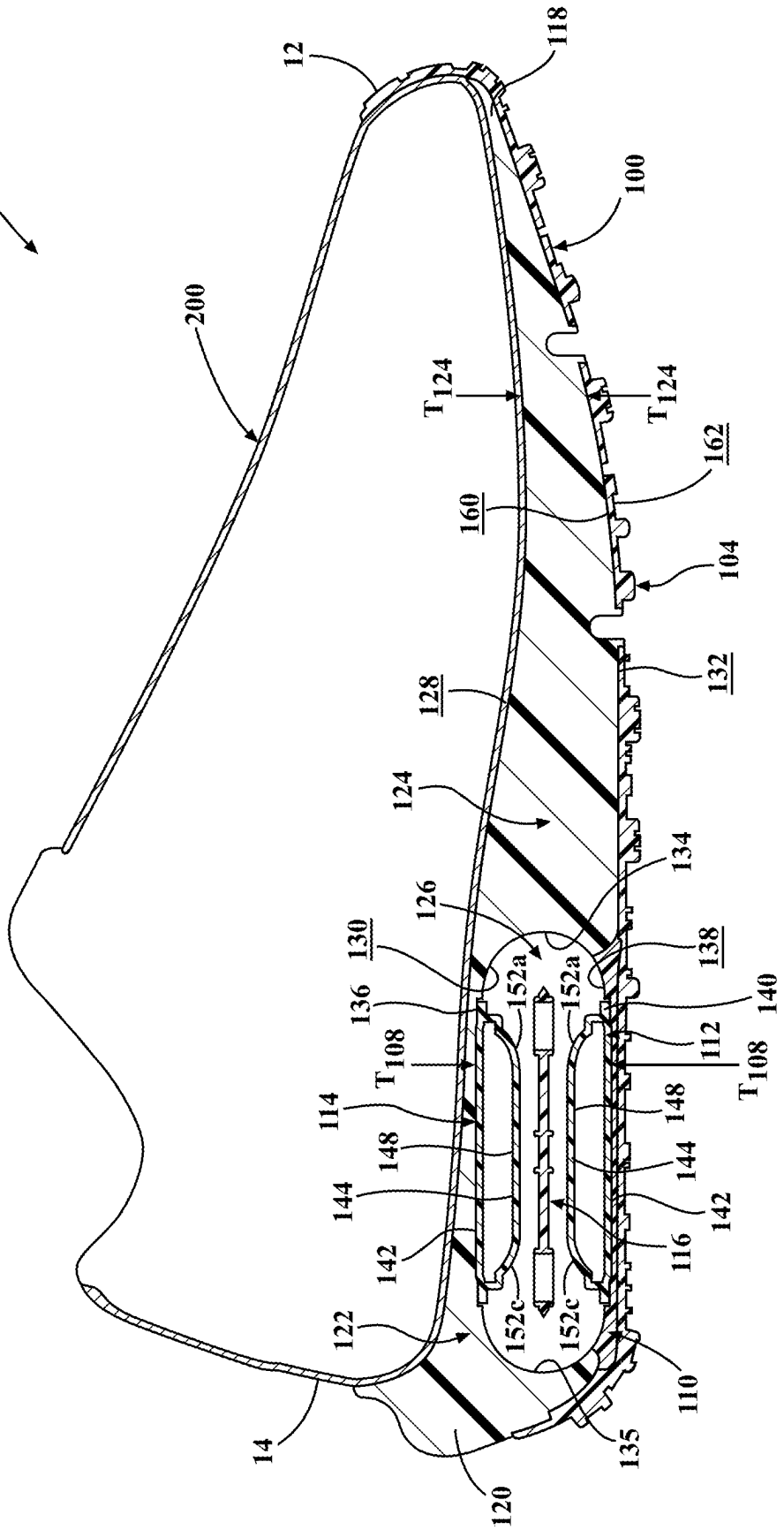
10
12
118
100
200
T_{124}
T_{124}
162
160
104
132
128
124
134
126
130
138
152a
152a
140
136
112
T_{108}
T_{108}
114
148
148
144
144
142
142
116
152c
152c
122
110
14
135
120

FIG. 4

FIG. 5

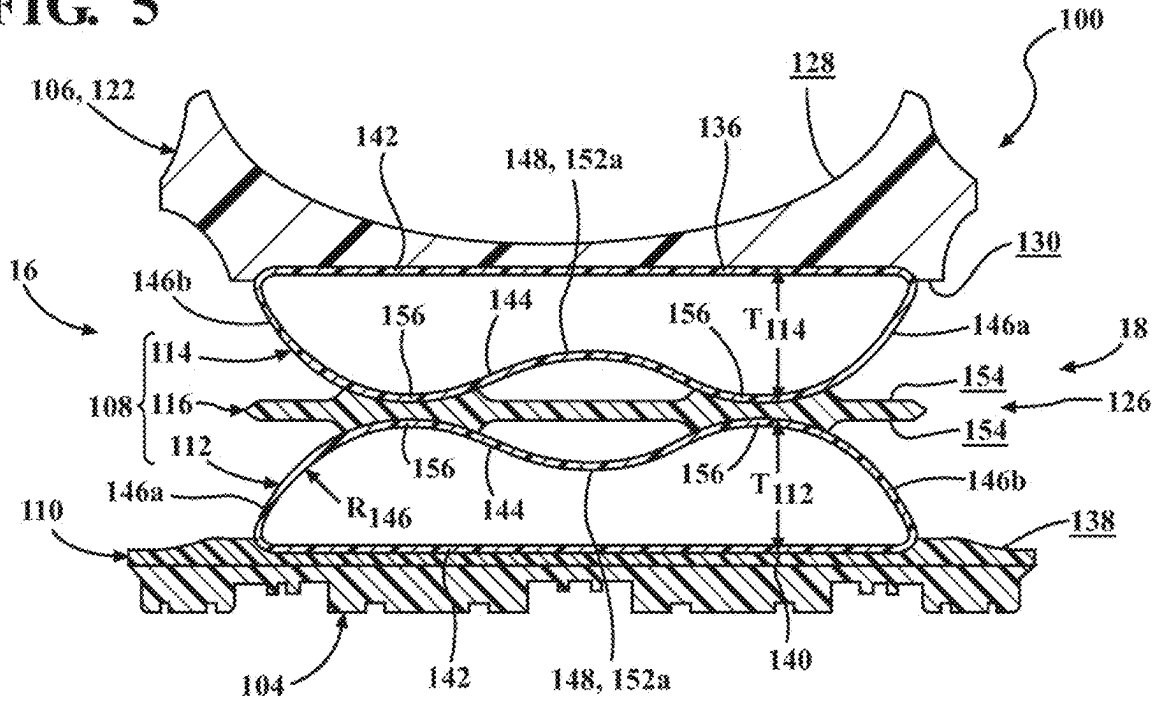
100
128
106, 122
142
136
148, 152a
130
16
146b
156
144
156
T_{114}
146a
18
114
154
108
116
126
154
112
156
156
T_{112}
146b
146a
R_{146}
144
110
138
104
142
148, 152a
140

FIG. 6

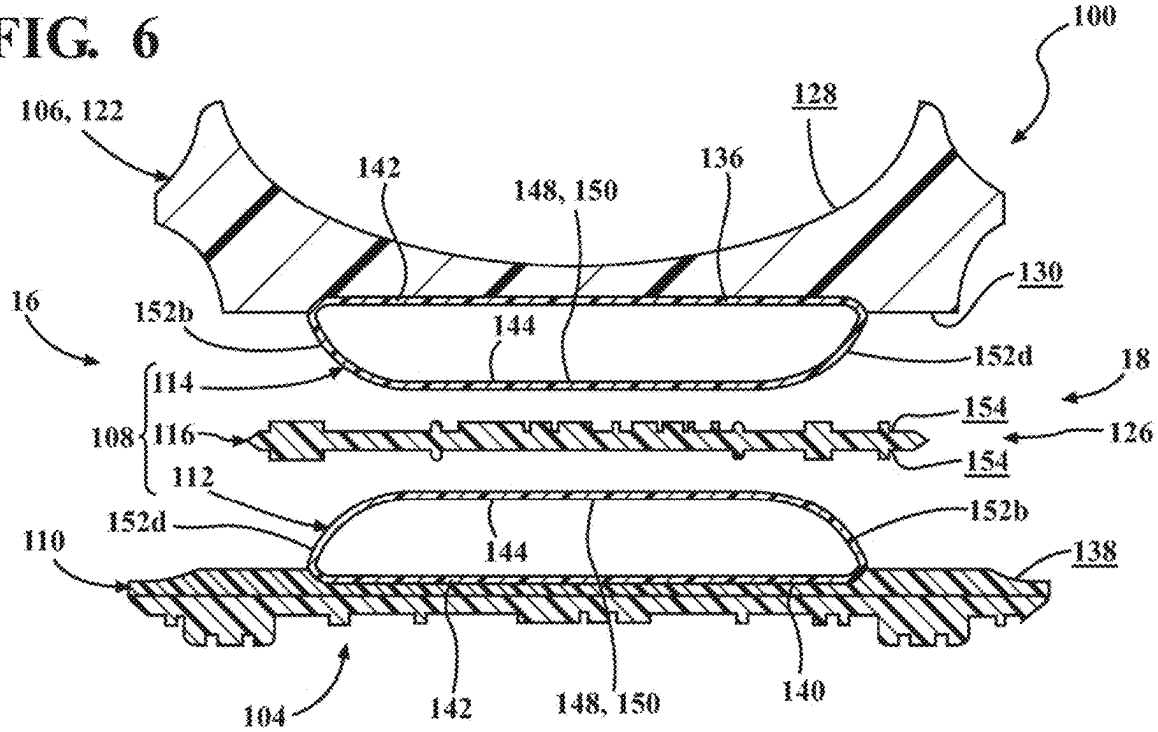
100
128
106, 122
142
136
148, 150
130
16
152b
144
152d
18
114
154
108
116
126
154
112
152d
152b
110
144
138
104
142
148, 150
140

FIG. 7

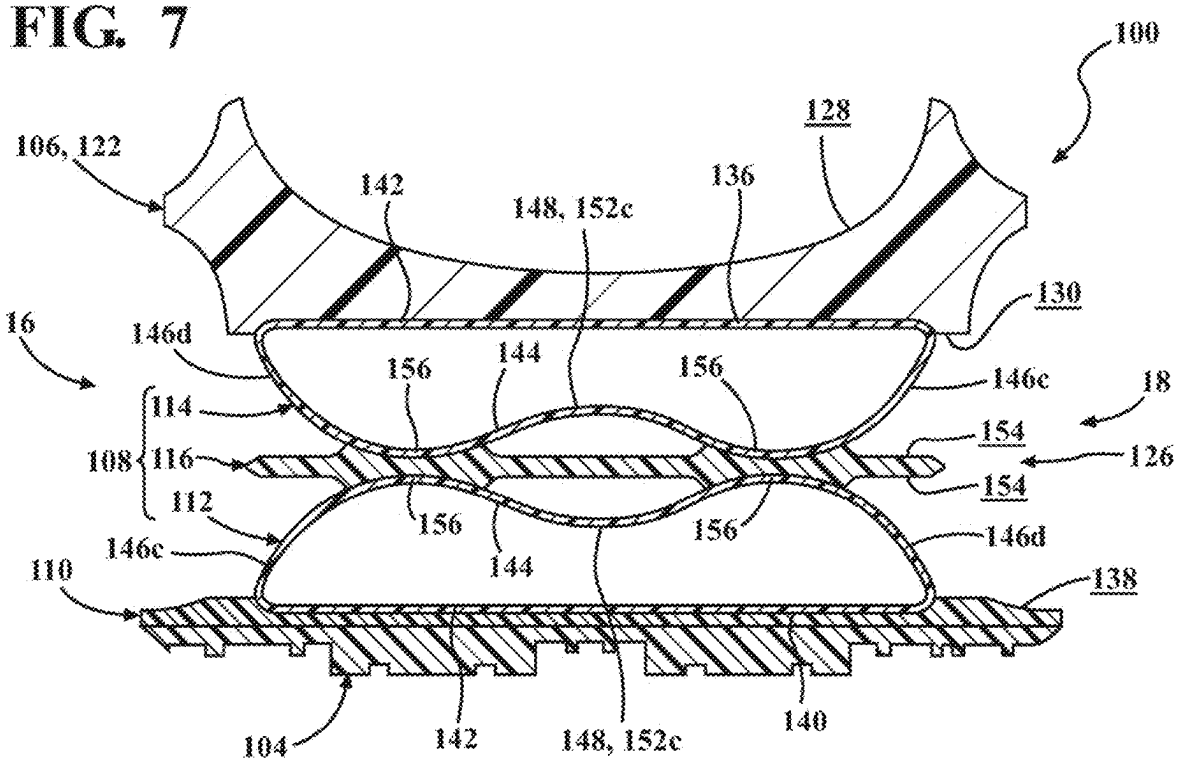
100
128
106, 122
142
136
148, 152c
130
16
146d
156
144
156
146c
18
114
154
108
116
126
154
112
156
156
146d
146c
144
110
138
104
142
148, 152c
140

FIG. 8

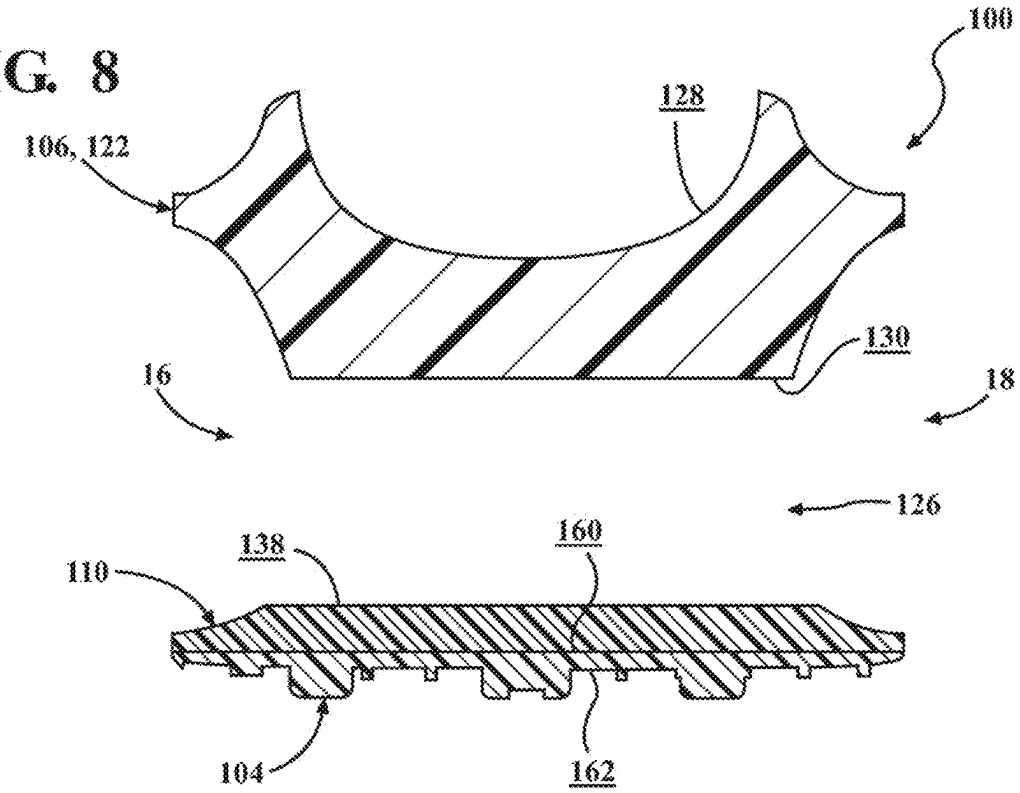
100
128
106, 122
130
16
18
126
138
160
110
104
162

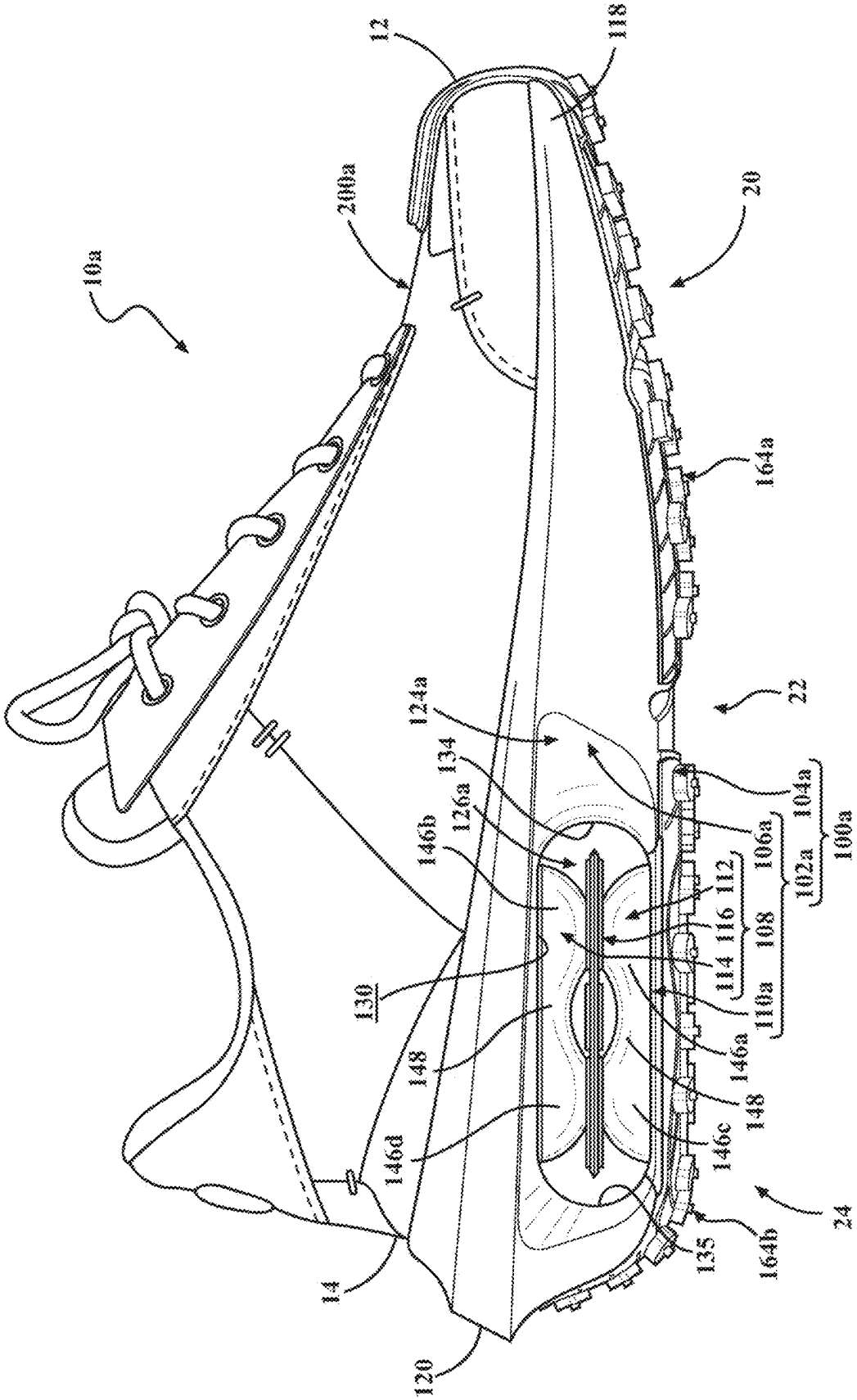
10a
12
118
200a
20
164a
22
124a
134
126a
146b
104a
106a
100a
102a
112
116
108
114
110a
130
148
146a
148
146d
146c
24
135
164b
14
120

FIG. 9

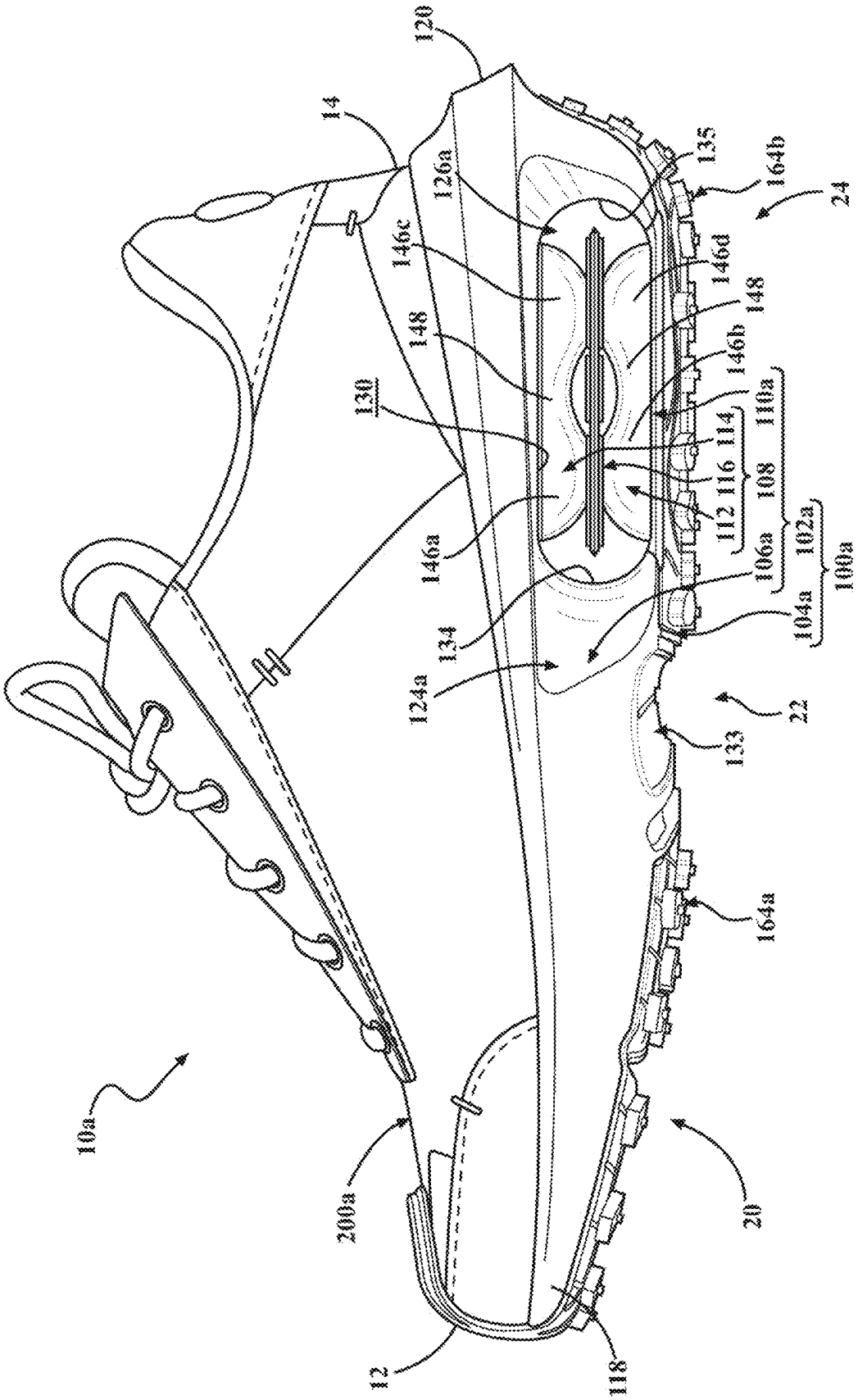
120
14
126a
135
164b
24
146c
146d
148
148
146b
130
110a
114
116
108
112
102a
106a
100a
146a
104a
134
124a
22
133
164a
10a
200a
20
12
118

FIG. 10

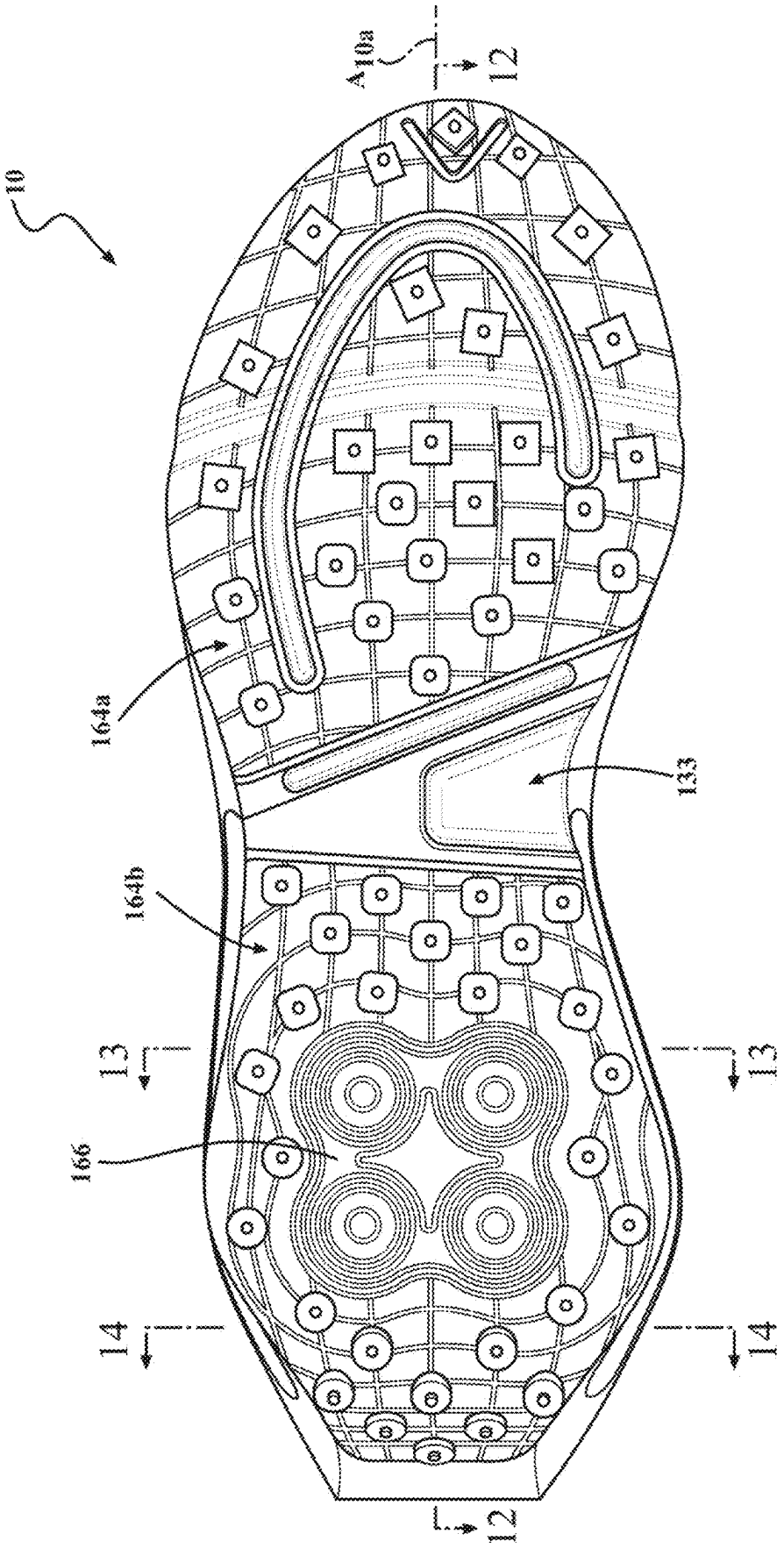

FIG. 11

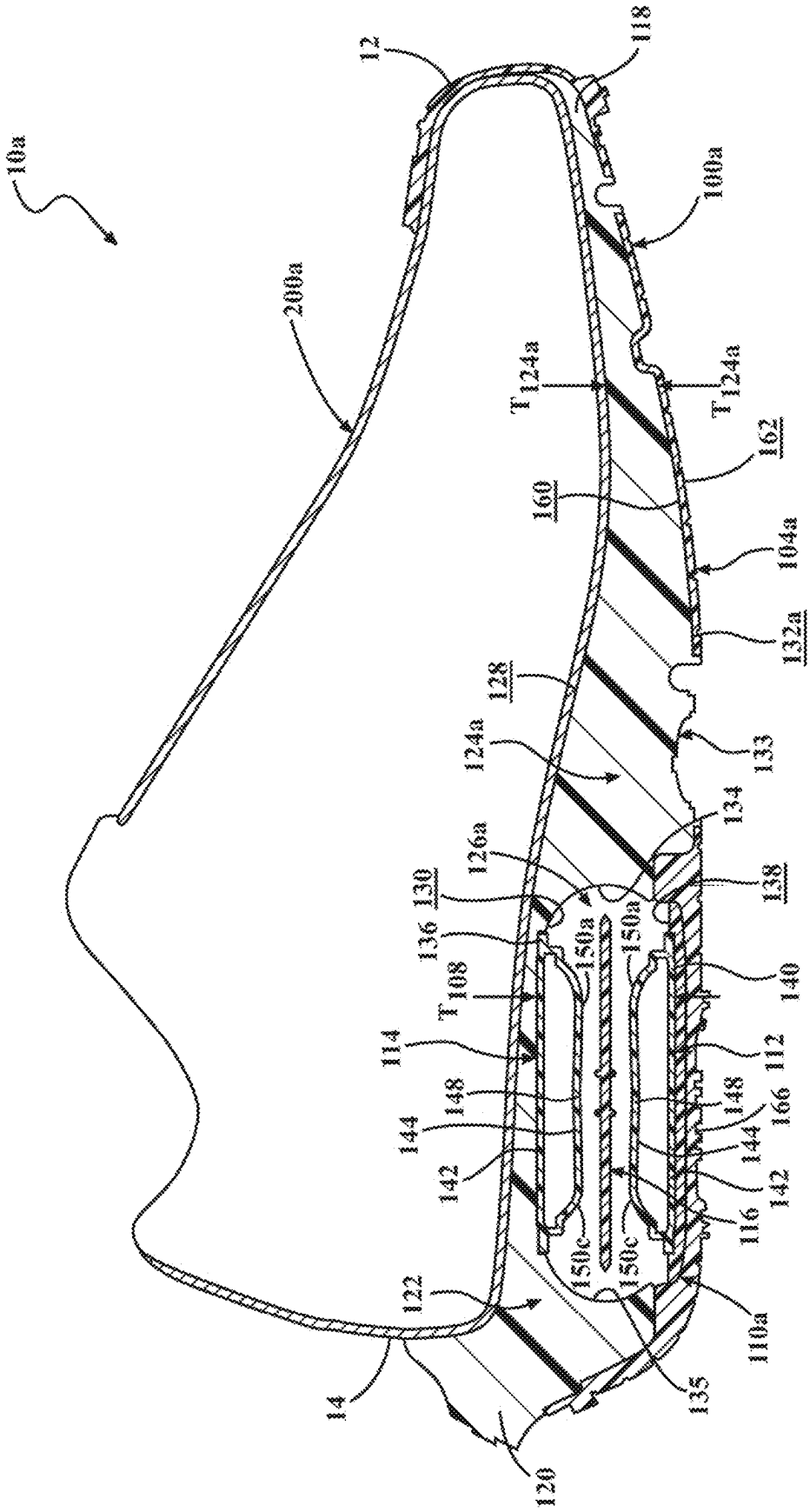
10a
12
118
100a
200a
T_{124a}
T_{124a}
162
160
104a
132a
128
133
124a
134
126a
138
130
136
150a
150a
140
T_{108}
114
112
148
148
166
144
144
142
142
116
150c
150c
122
110a
135
14
120

FIG. 12

FIG. 13

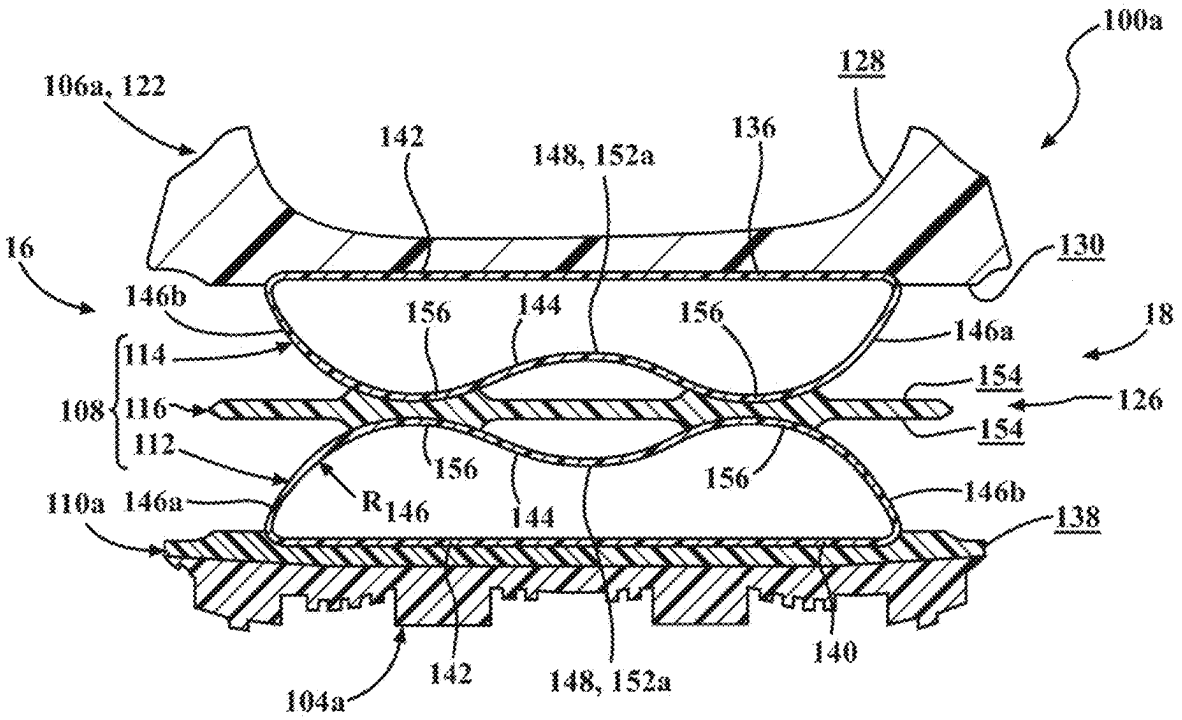
100a
128
106a, 122
142
148, 152a
136
16
130
146b
156
144
156
146a
18
114
154
108
116
126
154
112
156
156
110a
146a
R146
144
146b
138
140
142
148, 152a
104a

FIG. 14

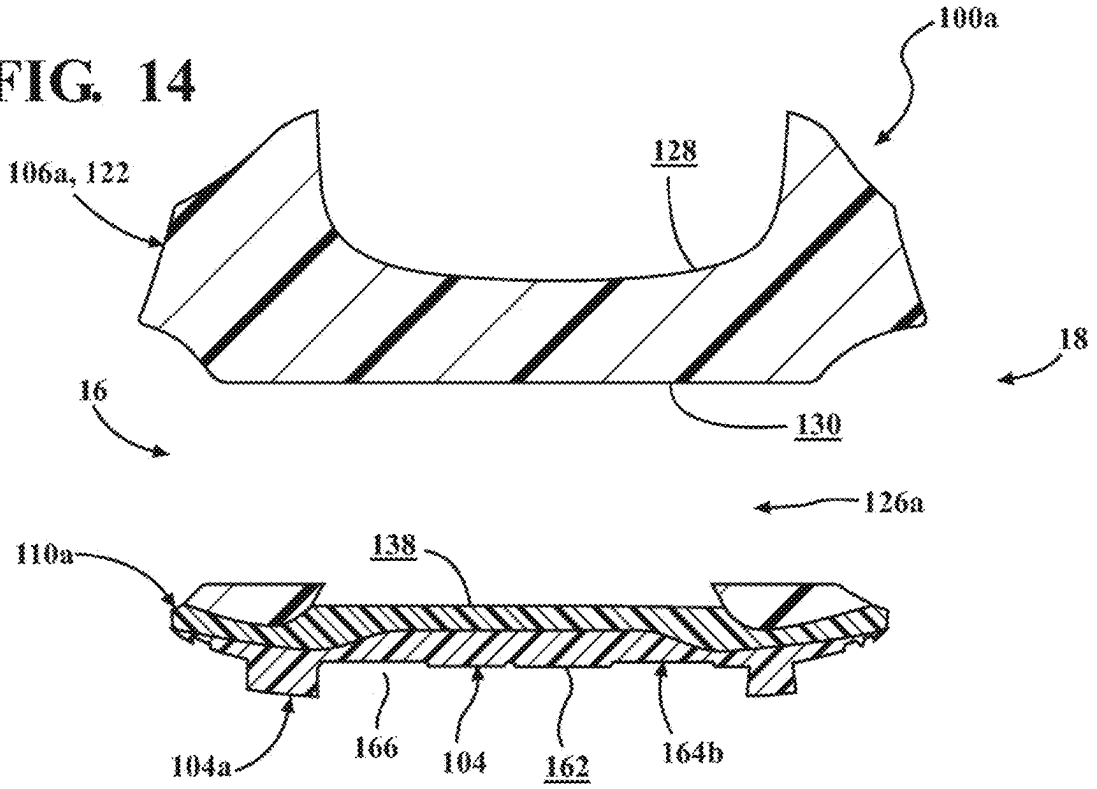
100a
128
106a, 122
18
16
130
126a
110a
138
166
104
162
164b
104a

FIG. 15A

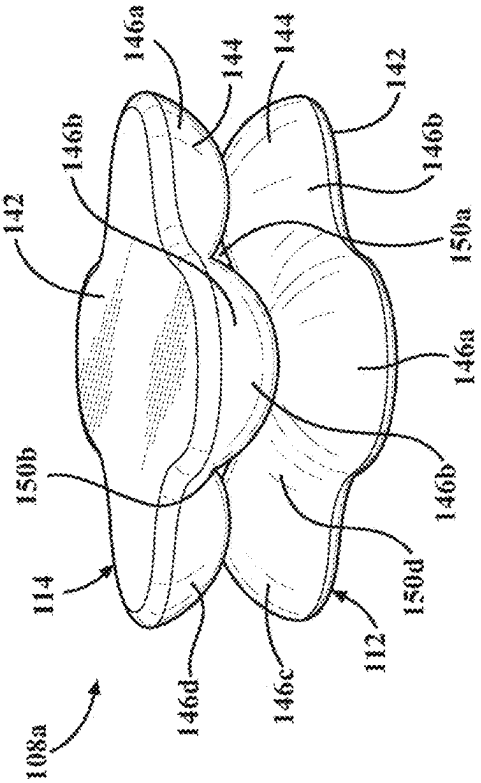

FIG. 15B

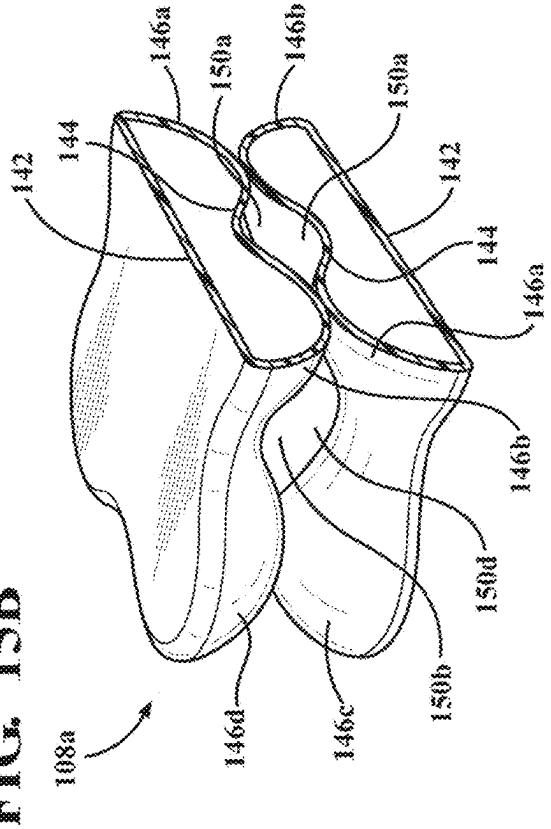

FIG. 16A

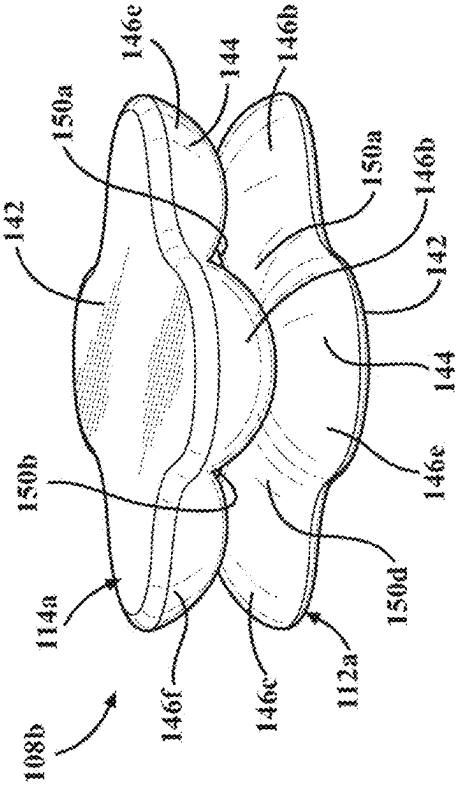

FIG. 16B

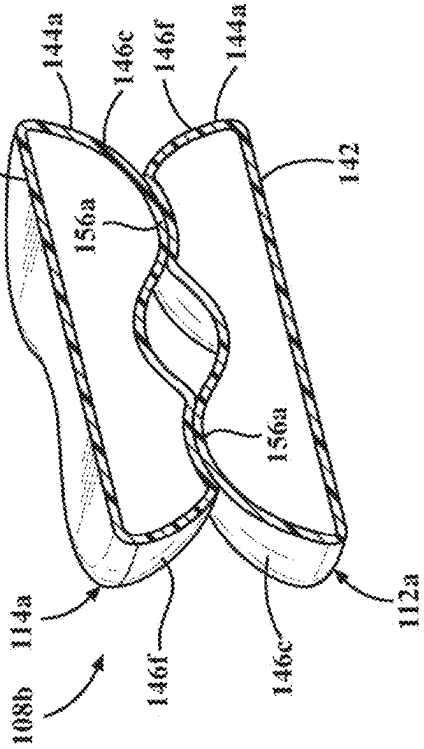

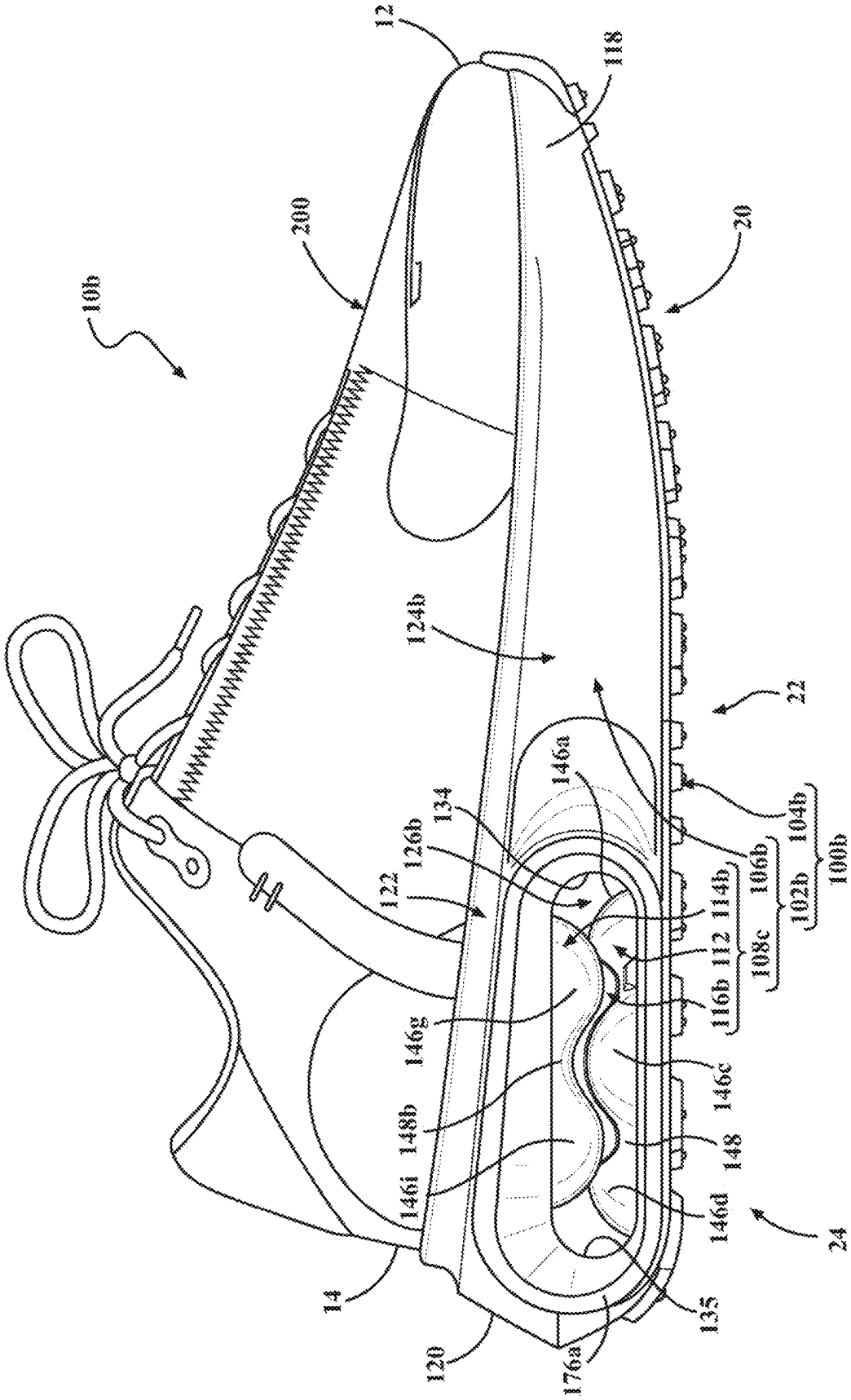
10b
200
12
118
20
124b
22
146a
134
126b
122
104b
106b
100b
102b
114b
108c
112
116b
146g
146c
148b
148
146i
146d
24
14
135
120
176a

FIG. 17

FIG. 18

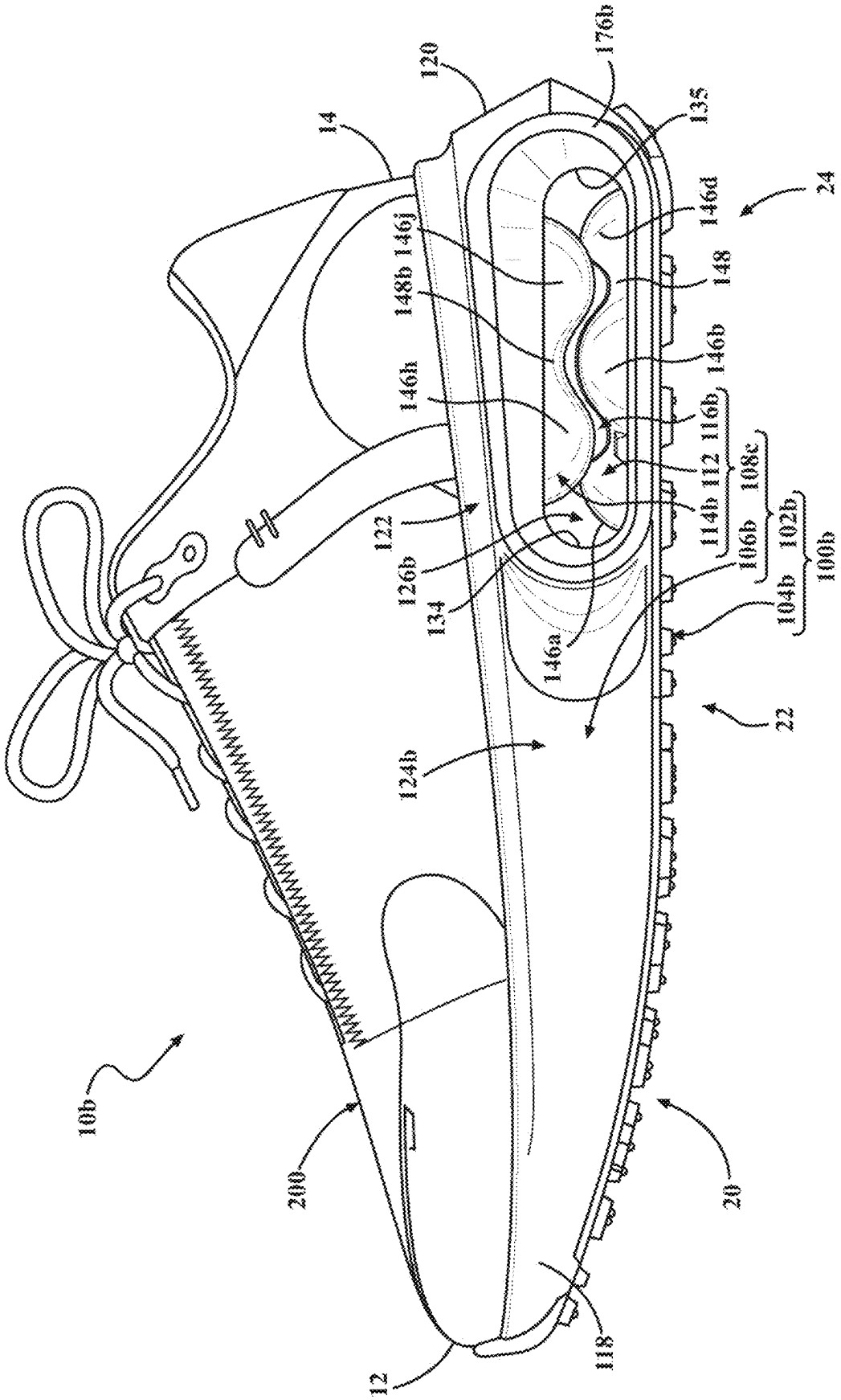
10b
12
118
200
20
22
24
14
120
176b
135
146d
148
146b
146j
148b
146h
116b
112
108c
114b
106b
102b
100b
104b
122
126b
134
146a
124b

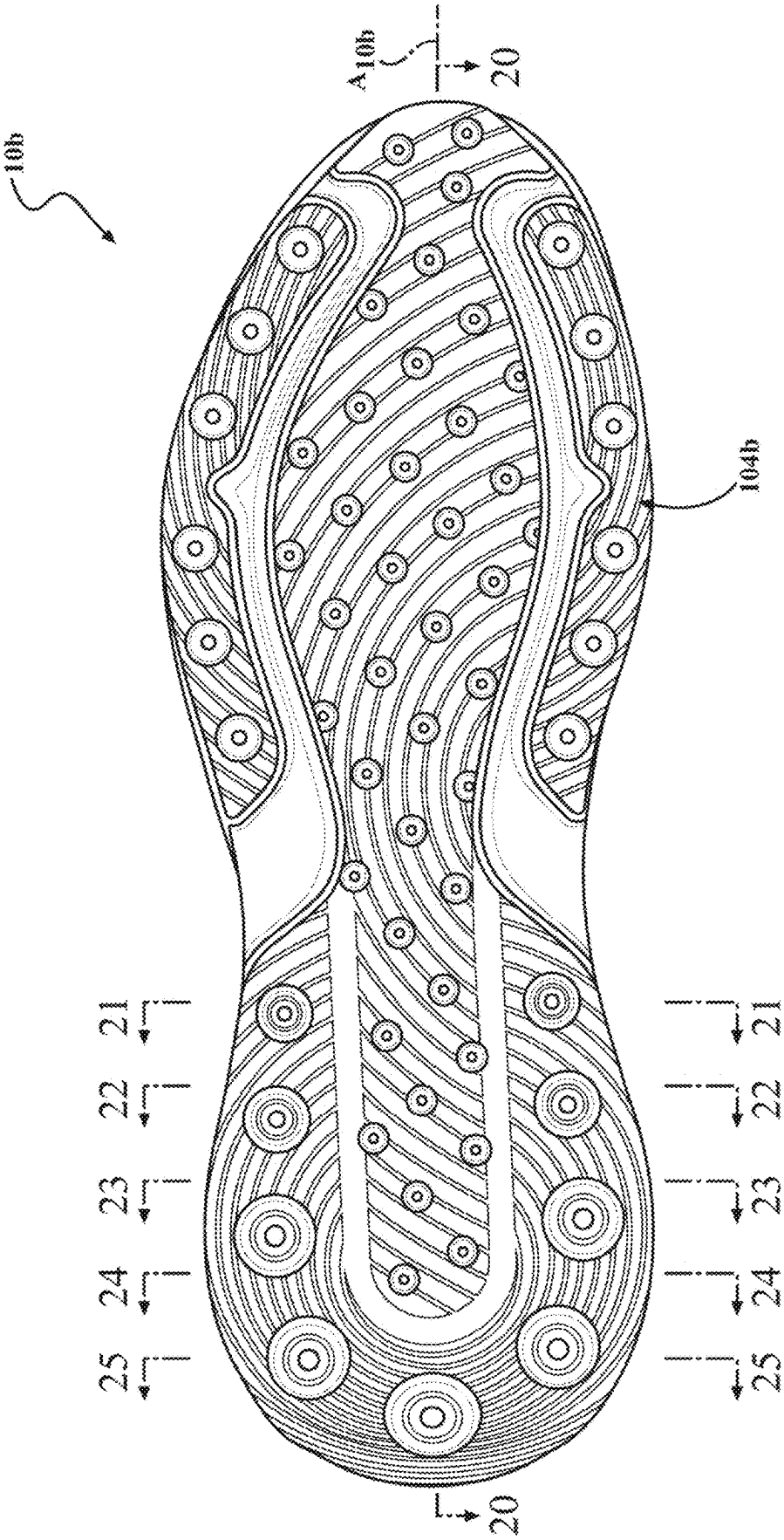

FIG. 19

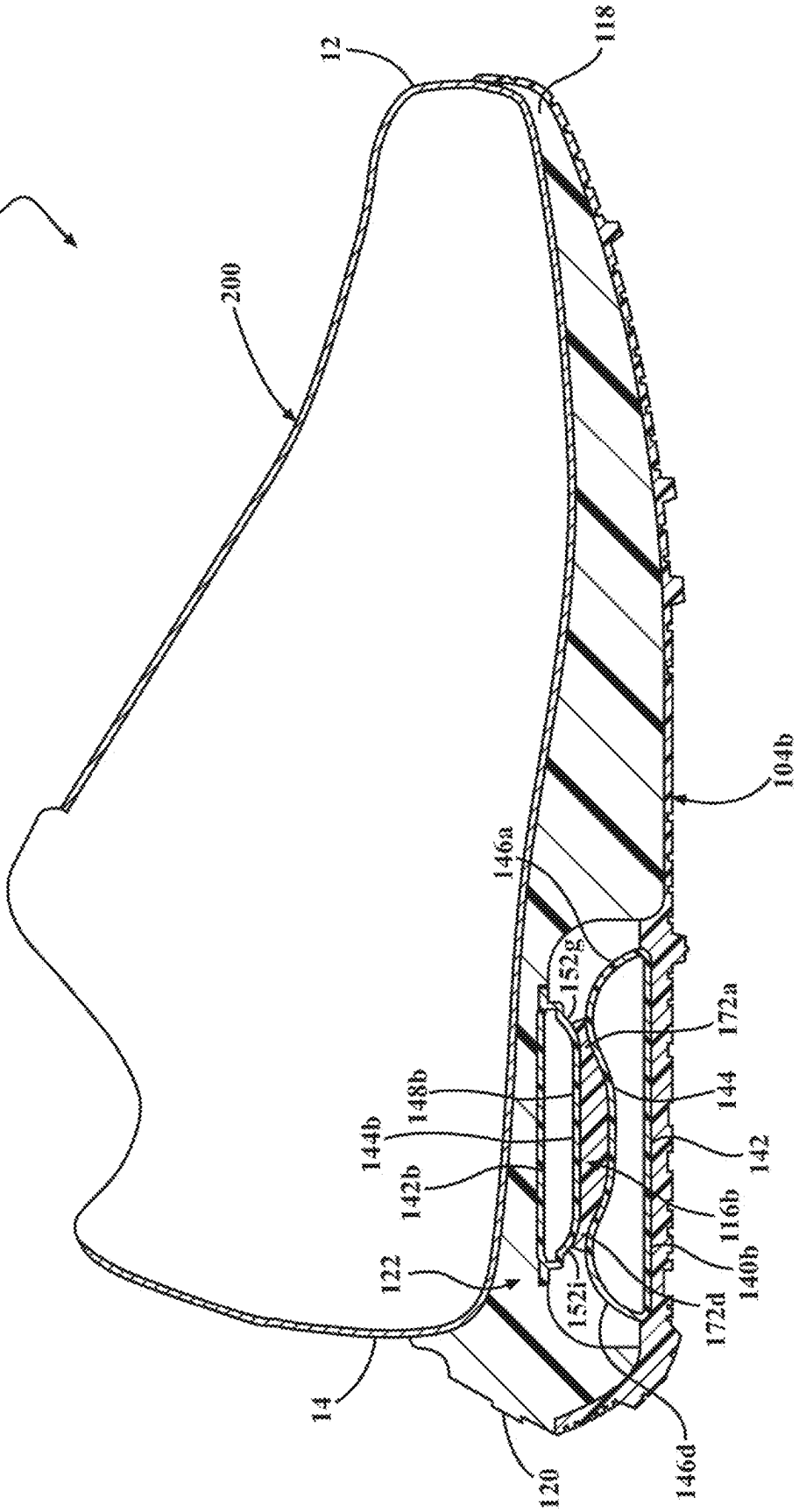
10b
200
12
118
104b
146a
152g
172a
144
142
148b
144b
142b
116b
140b
122
152i
172d
14
120
146d

FIG. 20

FIG. 21

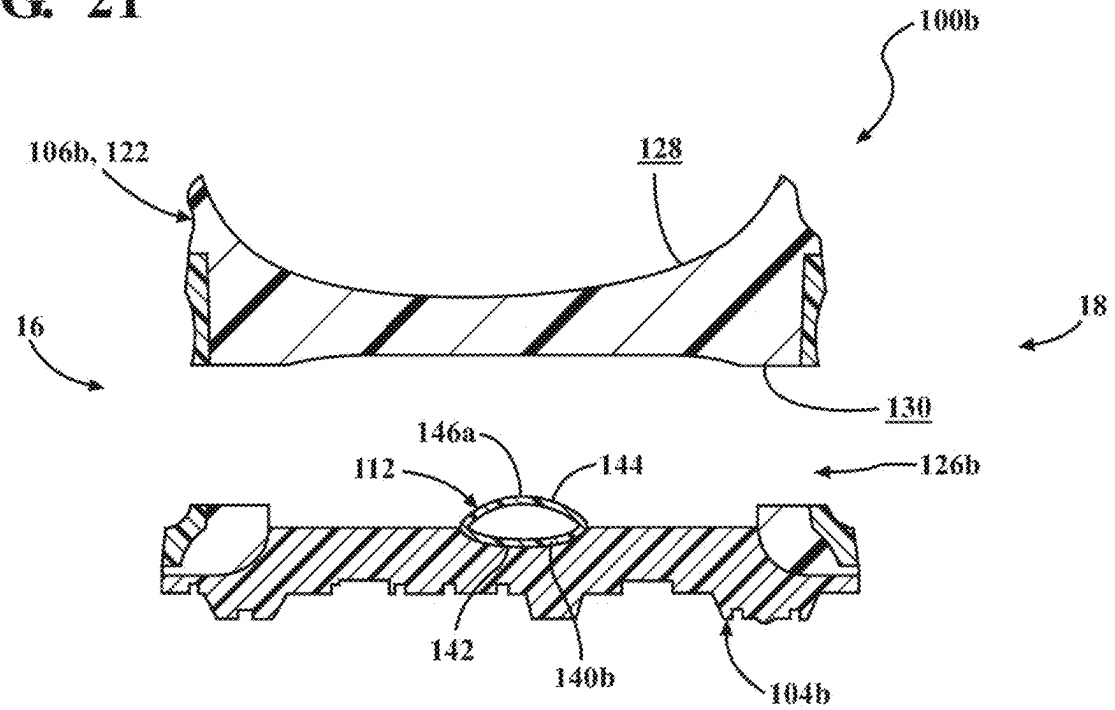
100b
106b, 122
128
16
18
130
146a
112
144
126b
142
140b
104b

FIG. 22

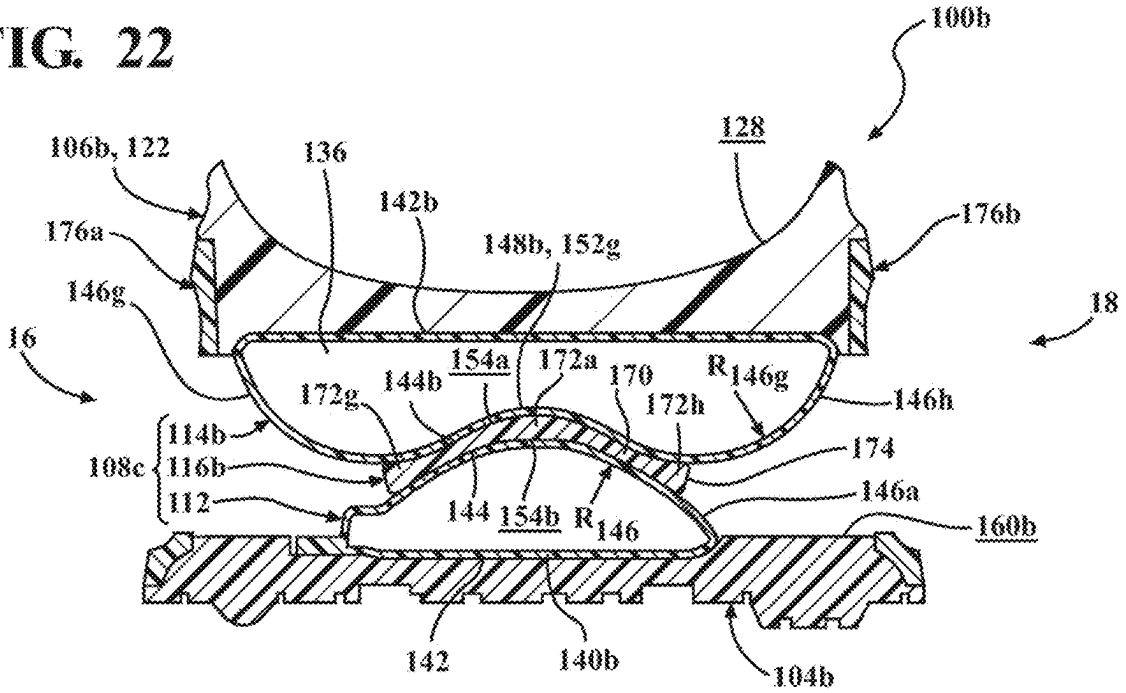
100b
106b, 122
136
128
142b
176a
148b, 152g
176b
146g
18
16
154a
172a
170
R146g
172g
144b
172h
146h
114b
108c
116b
174
112
144
154b
R146
146a
160b
142
140b
104b

FIG. 23

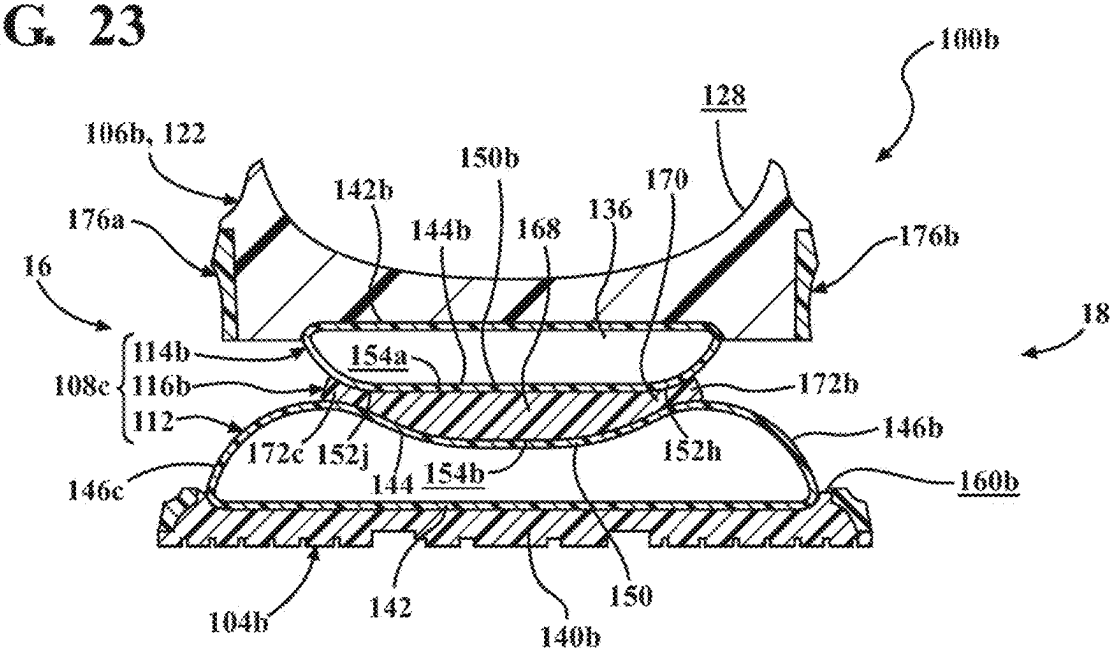
100b
128
106b, 122
150b
142b
170
136
176a
144b
168
176b
16
18
114b
154a
108c
116b
172b
112
146b
172c
152j
152h
146c
144
154b
160b
104b
142
150
140b

FIG. 24

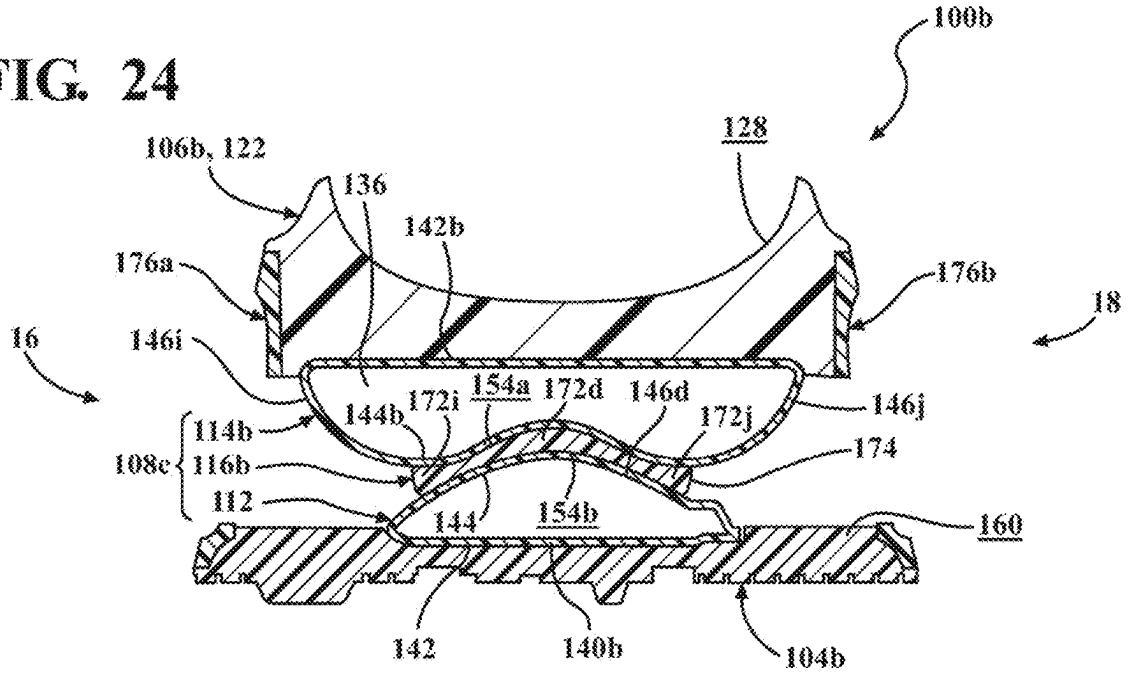
100b
128
106b, 122
136
142b
176a
176b
18
16
146i
154a
172d
146d
146j
144b
172i
172j
114b
174
108c
116b
112
144
154b
160
142
140b
104b

FIG. 25

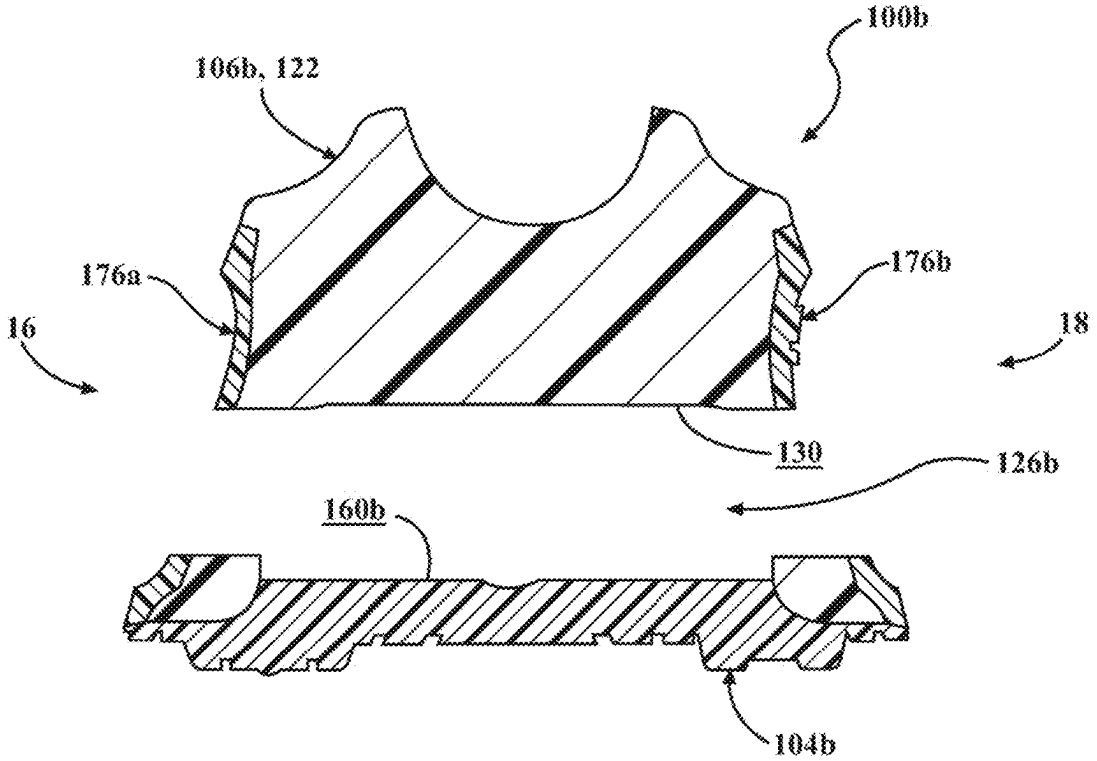

FIG. 26A

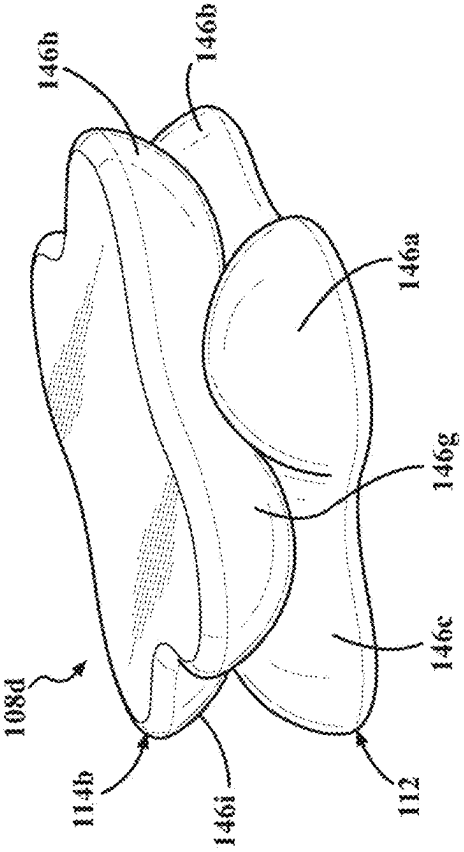

FIG. 26B

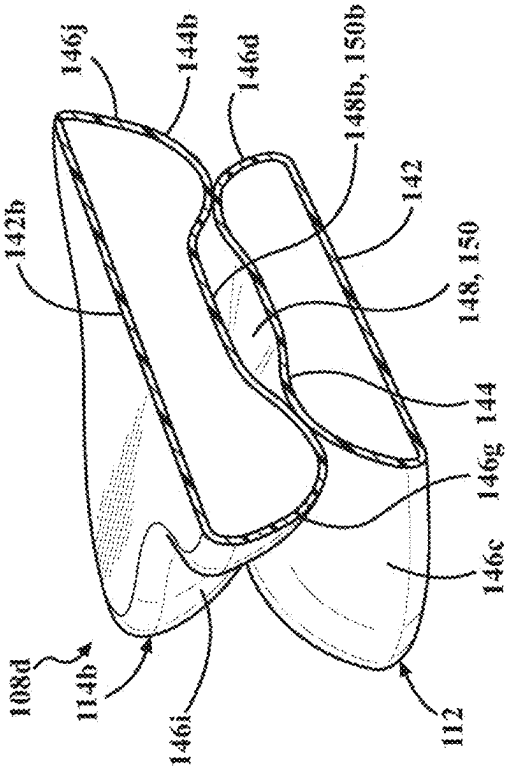

FIG. 27A

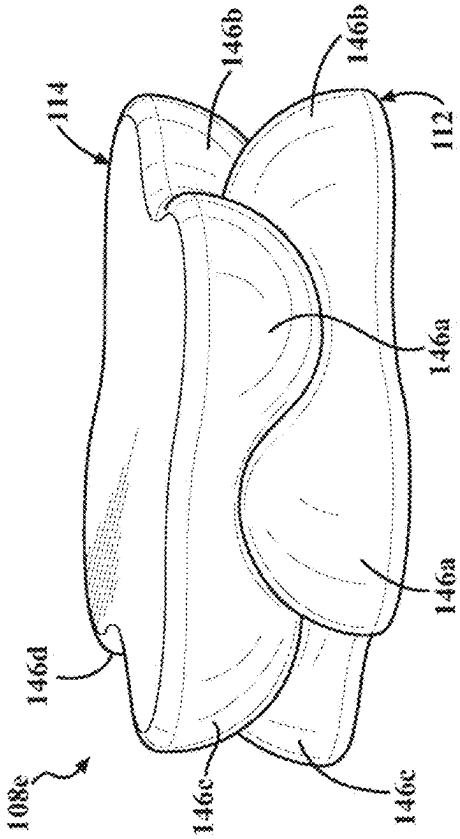

FIG. 27B

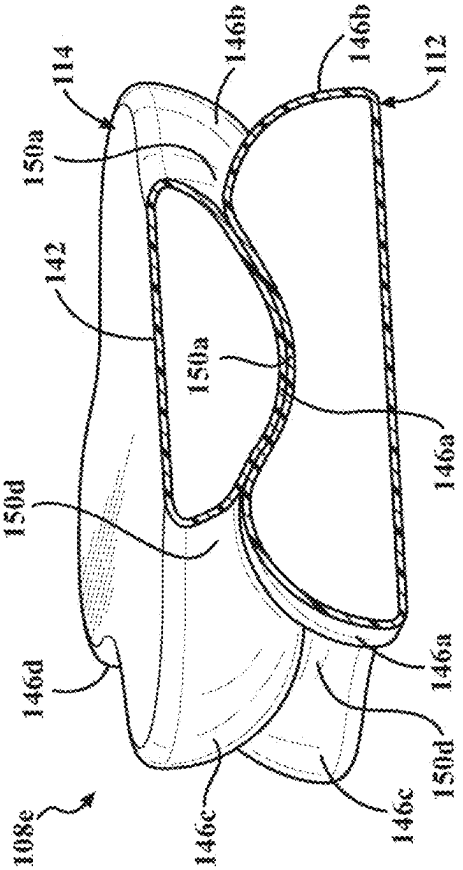

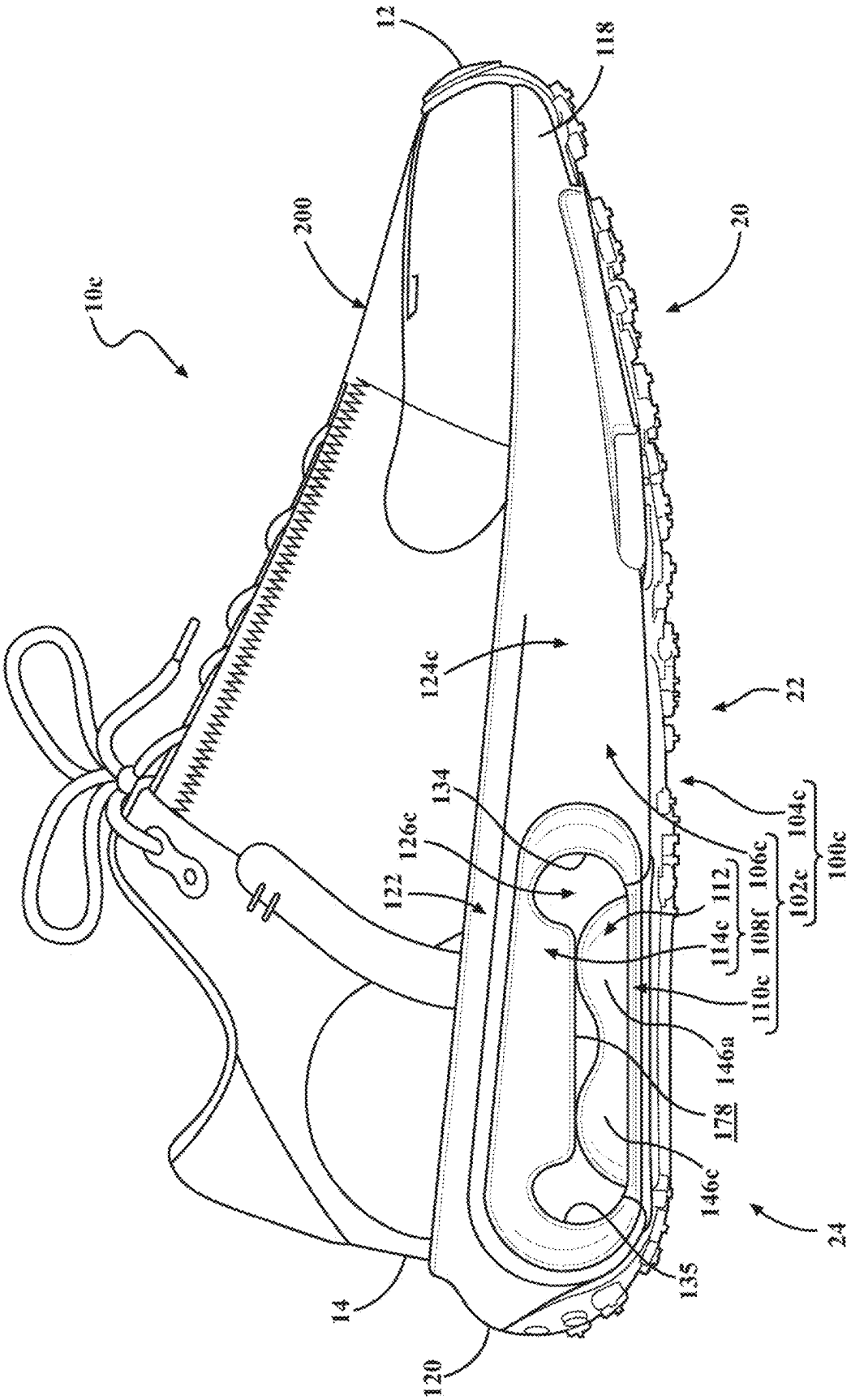
10c
200
12
118
20
124c
22
134
126c
122
104c
106c
102c
100c
114c
112
108f
110c
146a
178
146c
24
135
14
120

FIG. 28

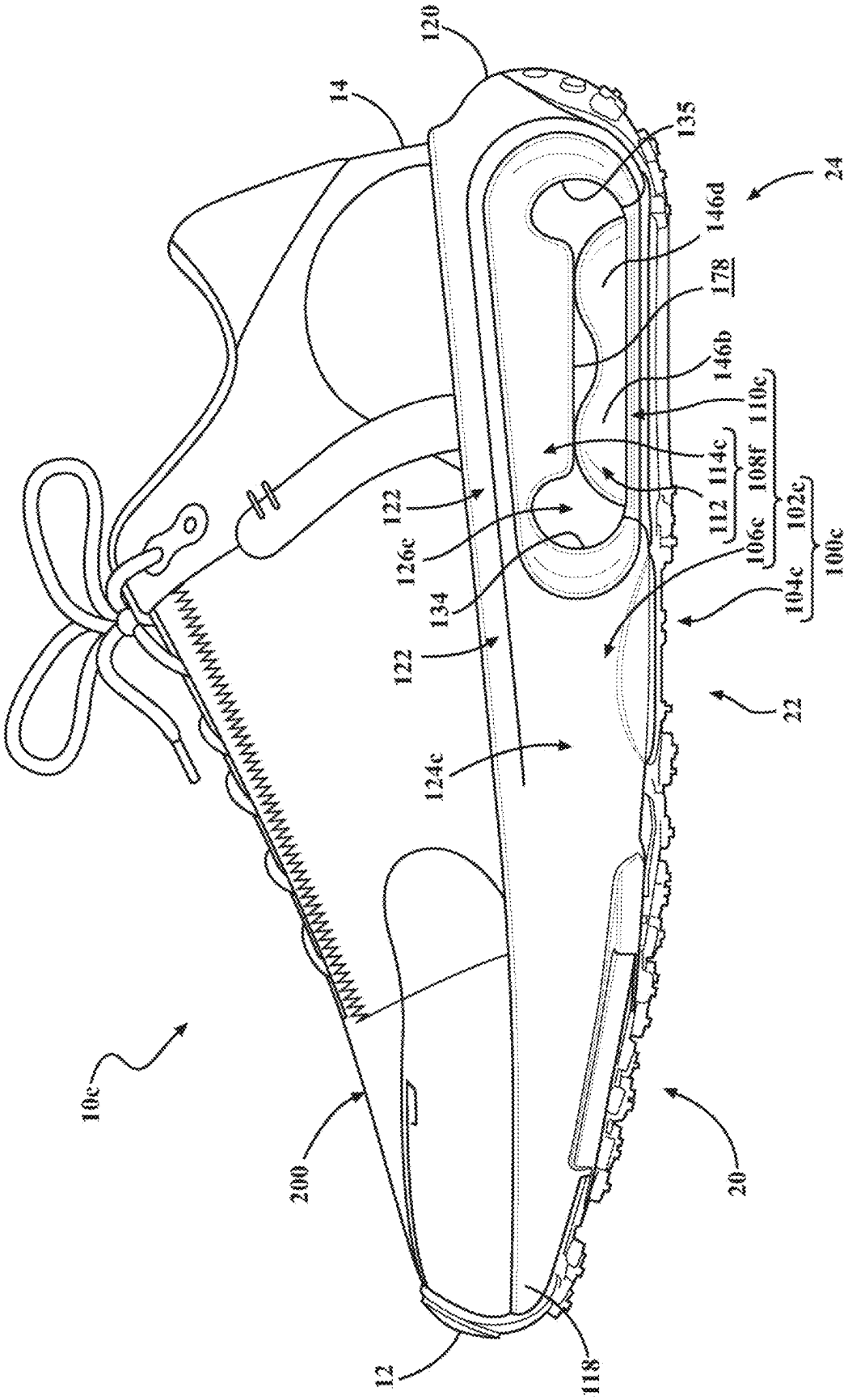
120
14
135
24
146d
178
146b
110c
114c
108f
112
102c
106c
100c
104c
122
126c
134
122
124c
22
10c
200
20
12
118

FIG. 29

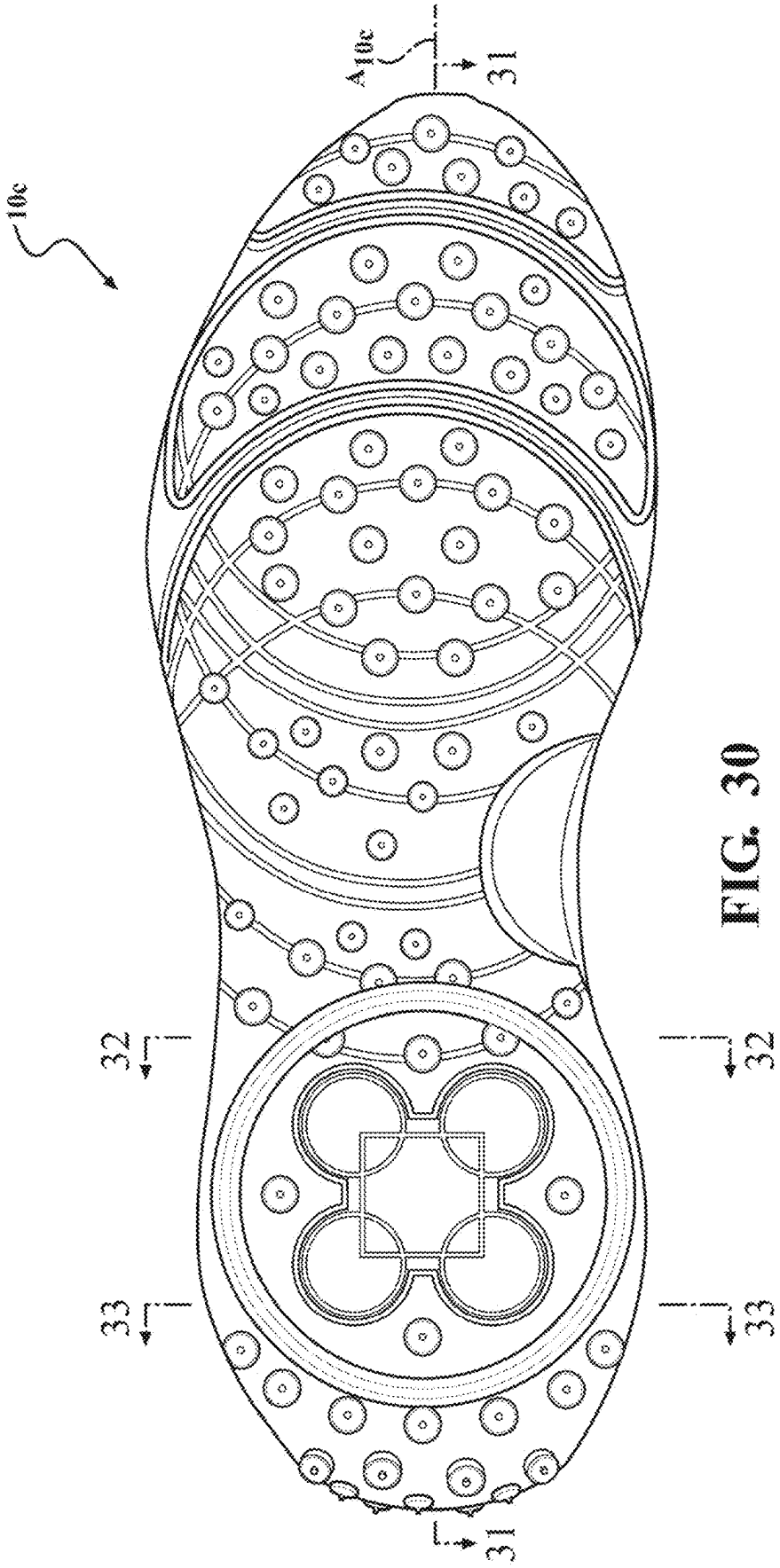

FIG. 30

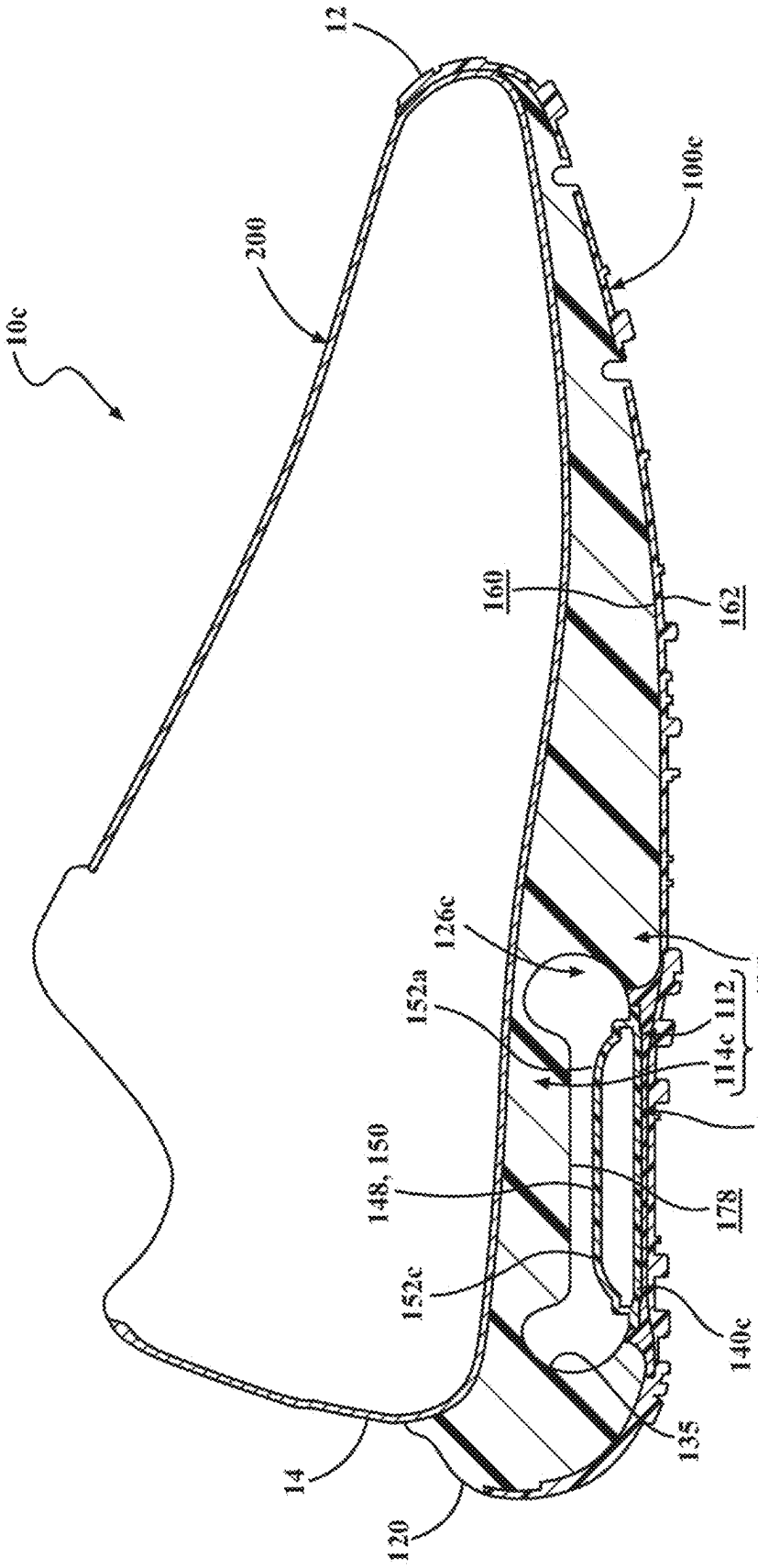
12
200
10c
100c
160
162
126c
152a
106c
112
114c
108f
102c
110c
148, 150
178
152c
140c
135
14
120

FIG. 31

FIG. 32

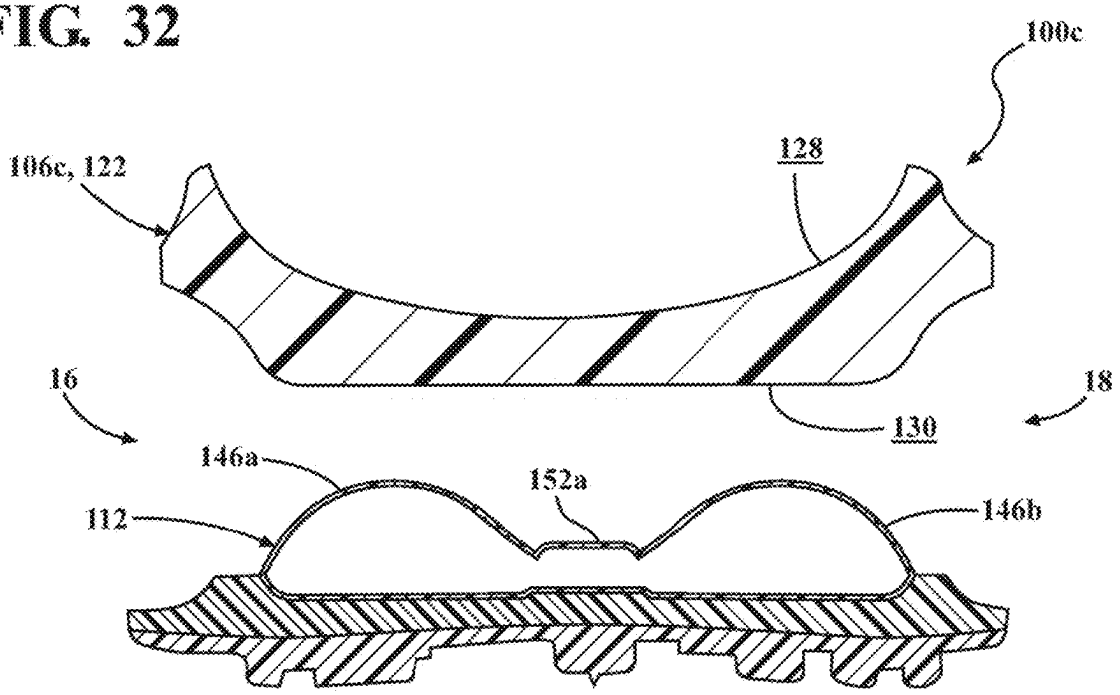
100c
128
106c, 122
16
18
130
146a
152a
112
146b

FIG. 33

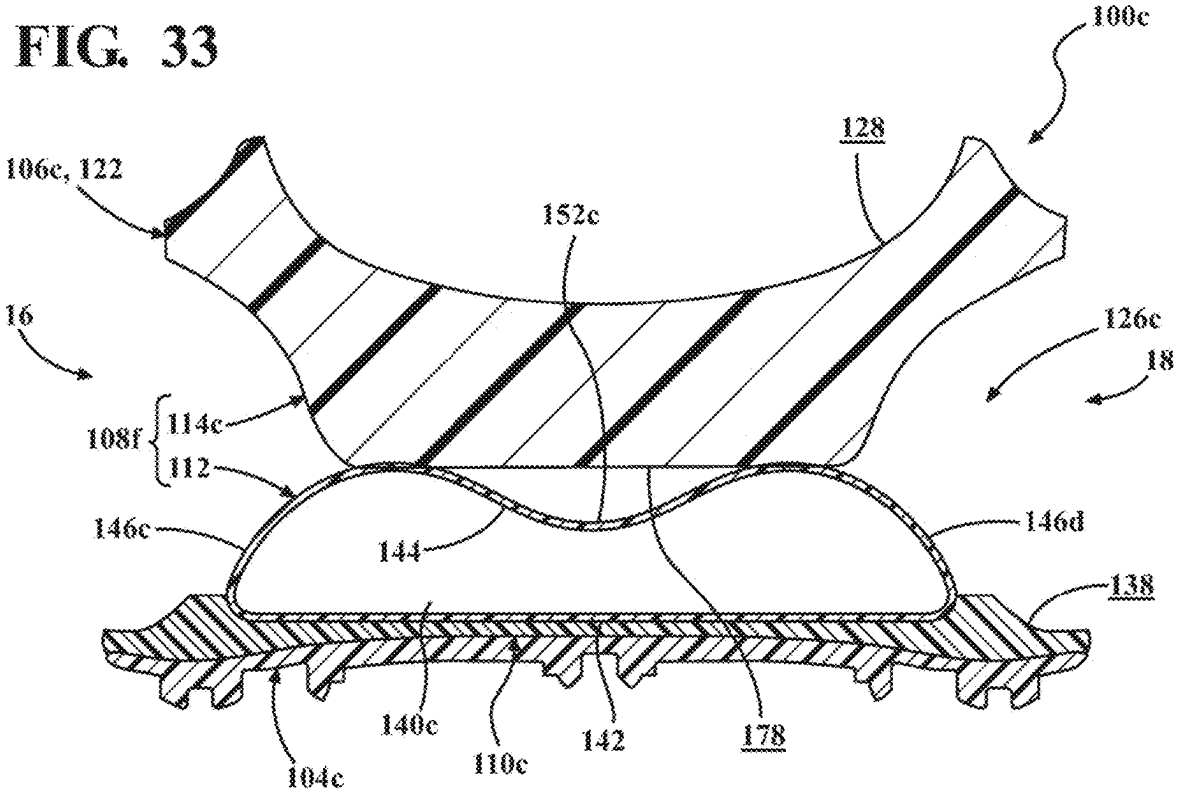
100c
128
106c, 122
152c
16
126c
18
108f
114c
112
146c
144
146d
138
140c
110c
142
178
104c

SOLE STRUCTURE FOR ARTICLE OF FOOTWEAR

CROSS REFERENCE TO RELATED APPLICATIONS

This application is a continuation of U.S. application Ser. No. 17/330,333, filed May 25, 2021, which claims priority under 35 U.S.C. § 119(e) to U.S. Provisional Application No. 63/032,690, filed on May 31, 2020. The disclosures of these prior applications are considered part of the disclosure of this application and are hereby incorporated by reference in their entirety.

FIELD

The present disclosure relates generally to sole structures for articles of footwear, and more particularly, to sole structures incorporating a bladder.

BACKGROUND

This section provides background information related to the present disclosure, which is not necessarily prior art.

Articles of footwear conventionally include an upper and a sole structure. The upper may be formed from any suitable material(s) to receive, secure, and support a foot on the sole structure. The upper may cooperate with laces, straps, or other fasteners to adjust the fit of the upper around the foot. A bottom portion of the upper, proximate to a bottom surface of the foot, attaches to the sole structure.

Sole structures generally include a layered arrangement extending between a ground surface and the upper. One layer of the sole structure includes an outsole that provides traction with the ground surface. The outsole may be formed from rubber or other materials that impart durability and wear-resistance, as well as enhance traction with the ground surface. Another layer of the sole structure includes a midsole disposed between the outsole and the upper. The midsole provides cushioning for the foot and may be partially formed from a polymer foam material that compresses resiliently under an applied load to cushion the foot by attenuating ground-reaction forces. The midsole may additionally or alternatively incorporate a fluid-filled bladder to provide cushioning to the foot by compressing resiliently under an applied load to attenuate ground-reaction forces. Sole structures may also include a comfort-enhancing insole or a sockliner located within a void proximate to the bottom portion of the upper and a strobel attached to the upper and disposed between the midsole and the insole or sockliner.

Midsoles employing bladders typically include a bladder formed from two barrier layers of polymer material that are sealed or bonded together. The bladders may contain air, and are designed with an emphasis on balancing support for the foot and cushioning characteristics that relate to responsiveness as the bladder resiliently compresses under an applied load.

DRAWINGS

The drawings described herein are for illustrative purposes only of selected configurations and are not intended to limit the scope of the present disclosure.

FIG. **1** is a lateral side elevation view of an article of footwear including a sole structure in accordance with the principles of the present disclosure;

FIG. **2** is a medial side elevation view of the article of footwear of FIG. **1**;

FIG. **3** is a bottom plan view of the article of footwear of FIG. **1**;

FIG. **4** is a cross-section view of the article of footwear of FIG. **1**, taken along Line **4-4** in FIG. **3**;

FIG. **5** is a cross-section view of the article of footwear of FIG. **1**, taken along Line **5-5** in FIG. **3**;

FIG. **6** is a cross-section view of the article of footwear of FIG. **1**, taken along Line **6-6** in FIG. **3**;

FIG. **7** is a cross-section view of the article of footwear of FIG. **1**, taken along Line **7-7** in FIG. **3**;

FIG. **8** is a cross-section view of the article of footwear of FIG. **1**, taken along Line **8-8** in FIG. **3**;

FIG. **9** is a lateral side elevation view of an article of footwear including a sole structure in accordance with the principles of the present disclosure;

FIG. **10** is a medial side elevation view of the article of footwear of FIG. **9**;

FIG. **11** is a bottom plan view of the article of footwear of FIG. **9**;

FIG. **12** is a cross-section view of the article of footwear of FIG. **9**, taken along Line **12-12** in FIG. **11**;

FIG. **13** is a cross-section view of the article of footwear of FIG. **9**, taken along Line **13-13** in FIG. **11**;

FIG. **14** is a cross-section view of the article of footwear of FIG. **9**, taken along Line **14-14** in FIG. **11**;

FIGS. **15**A and **15**B are perspective views of an example of an alternative cushioning arrangement for the article of footwear of FIG. **9**;

FIGS. **16**A and **16**B are perspective views of another example of an alternative cushioning arrangement for the article of footwear of FIG. **9**;

FIG. **17** is a lateral side elevation view of an article of footwear including a sole structure in accordance with the principles of the present disclosure;

FIG. **18** is a medial side elevation view of the article of footwear of FIG. **17**;

FIG. **19** is a bottom plan view of the article of footwear of FIG. **17**;

FIG. **20** is a cross-section view of the article of footwear of FIG. **17**, taken along Line **20-20** in FIG. **19**;

FIG. **21** is a cross-section view of the article of footwear of FIG. **17**, taken along Line **21-21** in FIG. **19**;

FIG. **22** is a cross-section view of the article of footwear of FIG. **17**, taken along Line **22-22** in FIG. **19**;

FIG. **23** is a cross-section view of the article of footwear of FIG. **17**, taken along Line **23-23** in FIG. **19**;

FIG. **24** is a cross-section view of the article of footwear of FIG. **17**, taken along Line **24-24** in FIG. **19**;

FIG. **25** is a cross-section view of the article of footwear of FIG. **17**, taken along Line **25-25** in FIG. **19**;

FIGS. **26**A and **26**B are perspective views of an example of an alternative cushioning arrangement for the article of footwear of FIG. **17**;

FIGS. **27**A and **27**B are perspective views of another example of an alternative cushioning arrangement for the article of footwear of FIG. **17**;

FIG. **28** is a lateral side elevation view of an article of footwear including a sole structure in accordance with the principles of the present disclosure;

FIG. **29** is a medial side elevation view of the article of footwear of FIG. **28**;

FIG. **30** is a bottom plan view of the article of footwear of FIG. **28**;

FIG. **31** is a cross-section view of the article of footwear of FIG. **28**, taken along Line **31-31** in FIG. **30**;

FIG. **32** is a cross-section view of the article of footwear of FIG. **28**, taken along Line **32-32** in FIG. **30**; and

FIG. **33** is a cross-section view of the article of footwear of FIG. **28**, taken along Line **33-33** in FIG. **30**.

Corresponding reference numerals indicate corresponding parts throughout the drawings.

DETAILED DESCRIPTION

Example configurations will now be described more fully with reference to the accompanying drawings. Example configurations are provided so that this disclosure will be thorough, and will fully convey the scope of the disclosure to those of ordinary skill in the art. Specific details are set forth such as examples of specific components, devices, and methods, to provide a thorough understanding of configurations of the present disclosure. It will be apparent to those of ordinary skill in the art that specific details need not be employed, that example configurations may be embodied in many different forms, and that the specific details and the example configurations should not be construed to limit the scope of the disclosure.

The terminology used herein is for the purpose of describing particular exemplary configurations only and is not intended to be limiting. As used herein, the singular articles "a," "an," and "the" may be intended to include the plural forms as well, unless the context clearly indicates otherwise. The terms "comprises," "comprising," "including," and "having," are inclusive and therefore specify the presence of features, steps, operations, elements, and/or components, but do not preclude the presence or addition of one or more other features, steps, operations, elements, components, and/or groups thereof. The method steps, processes, and operations described herein are not to be construed as necessarily requiring their performance in the particular order discussed or illustrated, unless specifically identified as an order of performance. Additional or alternative steps may be employed.

When an element or layer is referred to as being "on," "engaged to," "connected to," "attached to," or "coupled to" another element or layer, it may be directly on, engaged, connected, attached, or coupled to the other element or layer, or intervening elements or layers may be present. In contrast, when an element is referred to as being "directly on," "directly engaged to," "directly connected to," "directly attached to," or "directly coupled to" another element or layer, there may be no intervening elements or layers present. Other words used to describe the relationship between elements should be interpreted in a like fashion (e.g., "between" versus "directly between," "adjacent" versus "directly adjacent," etc.). As used herein, the term "and/or" includes any and all combinations of one or more of the associated listed items.

The terms first, second, third, etc. may be used herein to describe various elements, components, regions, layers and/or sections. These elements, components, regions, layers and/or sections should not be limited by these terms. These terms may be only used to distinguish one element, component, region, layer or section from another region, layer or section. Terms such as "first," "second," and other numerical terms do not imply a sequence or order unless clearly indicated by the context. Thus, a first element, component, region, layer or section discussed below could be termed a second element, component, region, layer or section without departing from the teachings of the example configurations.

One aspect of the disclosure provides a sole structure for an article of footwear. The sole structure includes a chassis having a recess formed between a first surface and a second surface facing the first surface. The sole structure also includes a cushioning arrangement including a first cushioning element protruding from the first surface and including a plurality of lobes and a second cushioning element protruding from the second surface to a distal end contacting the plurality of lobes. Implementations of the disclosure may include one or more of the following optional features.

In some examples, the first cushioning element includes a bladder.

In some implementations, a first side of the first cushioning element includes a substantially planar base and a second side of the first cushioning element includes the plurality of lobes formed on an opposite side from the base. In some configurations, lobes of the plurality of lobes are arranged in a quad-shaped configuration.

In some examples, each lobe of the plurality of lobes is hemispherical.

In some configurations, the first surface includes a first socket receiving a first end of the cushioning arrangement including the first cushioning element.

In some examples, the sole structure includes a cradle defining the first surface of the recess, the cradle including a harder material than the chassis. In some implementations, a length of the recess extends between a first concave end and a second concave end.

In some examples, the sole structure has a support plate disposed between the first cushioning element and the second cushioning element and including a plurality of receptacles receiving the plurality of lobes of the first cushioning element. Here, the support plate includes a material having a greater hardness than each of the first cushioning element and the second cushioning element.

Another aspect of the disclosure provides a sole structure for an article of footwear. The sole structure has a chassis including a recess formed between a first surface and a second surface facing the first surface. The sole structure also has a cushioning arrangement including a first cushioning element protruding from the first surface and including a first plurality of lobes, and a second cushioning element protruding from the second surface and including a second plurality of lobes contacting the first plurality of lobes. Implementations of the disclosure may include one or more of the following optional features.

In some examples, at least one of the first cushioning element and the second cushioning element includes a fluid-filled bladder.

In some implementations, a first side of the first cushioning element includes a substantially planar first base and the second cushioning element includes a substantially planar second base. Here, the first plurality of lobes is disposed on an opposite side of the first cushioning element than the substantially planar first base and the second plurality of lobes is disposed on an opposite side of the second cushioning element than the substantially planar second base.

In some examples, lobes of the first plurality of lobes and lobes of the second plurality of lobes are arranged in a quad-shaped configuration.

In some implementations, each lobe of the first plurality of lobes and each lobe of the second plurality of lobes is hemispherical.

In some configurations, the first surface includes a first socket receiving the first cushioning element and the second surface includes a second socket receiving the second cushioning element.

In some examples, the sole structure includes a cradle defining the first surface of the recess, the cradle including a harder material than the chassis.

In some configurations, a length of the recess extends between a first concave end and a second concave end.

In some examples, the sole structure includes a support plate disposed between the first cushioning element and the second cushioning element and including a plurality of receptacles receiving lobes of the first cushioning element and lobes of the second cushioning element. Here, the support plate includes a material having a greater hardness than each of the first cushioning element and the second cushioning element.

The details of one or more implementations of the disclosure are set forth in the accompanying drawings and the description below. Other aspects, features, and advantages will be apparent from the description and drawings, and from the claims.

Referring to FIG. **1**, an article of footwear **10** includes a sole structure **100** and an upper **200** attached to the sole structure. The footwear **10** may further include an anterior end **12** associated with a forward-most point of the footwear, and a posterior end **14** corresponding to a rearward-most point of the footwear **10**. As shown in FIG. **3**, a longitudinal axis A_F of the footwear **10** extends along a length of the footwear **10** from the anterior end **12** to the posterior end **14** parallel to a ground surface, and generally divides the footwear **10** into a lateral side **16** and a medial side **18**. Accordingly, the lateral side **16** and the medial side **18** respectively correspond with opposite sides of the footwear **10** and extend from the anterior end **12** to the posterior end **14**. As used herein, a longitudinal direction refers to the direction extending from the anterior end **12** to the posterior end **14**, while a lateral direction refers to the direction transverse to the longitudinal direction and extending from the lateral side **16** to the medial side **18**.

The article of footwear **10** may be divided into one or more regions. The regions may include a forefoot region **20**, a mid-foot region **22**, and a heel region **24**. The forefoot region **20** corresponds to a ball portion of the foot including the metatarsophalangeal (MTP) joint. The mid-foot region **22** may correspond with an arch area of the foot, and the heel region **24** may correspond with rear portions of the foot, including a calcaneus bone.

With reference to FIGS. **1** and **2**, the sole structure **100** includes a midsole **102** configured to provide cushioning characteristics to the sole structure **100**, and an outsole **104** configured to provide a ground-engaging surface of the article of footwear **10**. Unlike conventional sole structures, the midsole **102** of the sole structure **100** may be formed compositely and include a plurality of subcomponents for providing desired forms of cushioning and support throughout the sole structure **100**. For example, the midsole **102** includes a chassis **106** extending from the anterior end **12** to the posterior end **14**, and a cushioning arrangement **108** disposed within the heel region **24**. Optionally, the midsole **102** may include a cradle **110** configured to receive and support a lower portion of the cushioning arrangement **108** within the chassis **106**. The chassis **106** is configured to be attached to the upper **200** and provides an interface between the upper **200** and the cushioning arrangement **108**. As described in greater detail below, the cushioning arrangement includes a lower cushioning element **112** and an upper cushioning element **114** arranged in a stacked configuration in the heel region **24**. Optionally, the cushioning arrangement **108** includes a support plate **116** interposed between the lower cushioning element **112** and the upper cushioning element **114**.

With reference to FIGS. **1** and **2**, the chassis **106** of the midsole **102** extends continuously from a first end **118** at the anterior end **12** to a second end **120** at the posterior end **14**. An upper portion of the chassis **106** includes a footbed **122** configured to attach to the upper **200** and to provide support and cushioning for a plantar surface of the foot. A lower portion of the chassis **106** includes a forefoot support member **124** formed in the forefoot region **20** and the mid-foot region **22**, and a recess **126** extending through the mid-foot region **22** and the heel region **24**. As discussed below, the forefoot support member **124** is configured to provide cushioning along the forefoot region **20**, while the recess **126** is configured to receive the cushioning arrangement **108** for supporting the heel region **24** of the upper **200**.

The footbed **122** extends continuously from the first end **118** to the second end **120** of the chassis **106** and defines a top surface **128** of the chassis **106** configured to face the upper **200** when the article of footwear **10** is assembled. The footbed **122** also includes a lower surface **130** formed on an opposite side from the top surface **128**, where a distance between the top surface **128** and the lower surface **130** forms a thickness of the footbed **122**. As shown, the forefoot support member **124** depends from the lower surface **130** of the footbed **122** and defines a bottom surface **132** of the chassis **106**. Here, the forefoot support member **124** extends continuously from the first end **118** to a first end wall **134** formed in the mid-foot region **22**. A thickness T_{124} of the support member **124** progressively increases along a direction from the first end **118** to the end wall **134**.

The recess **126** is formed adjacent to the forefoot support member **124** and extends at least partially through the heel region **24** from the first end wall **134** in the mid-foot region **22** to a second end wall **135** in the heel region **24**, adjacent to the second end **120**. The first end wall **134** faces the second end wall **135** to define a length of the recess **126**. As shown, each end wall **134**, **135** may have a concave profile extending across a width of the chassis **106** from the lateral side **16** to the medial side **18**. In use, the concave geometries of the end walls **134**, **135** allow upper and lower portions of the end walls **134**, **135** to flex towards each other, which provides a spring-like compression of the end walls **134**, **135** during use. A depth or height of the recess **126** is defined by a distance from the bottom surface **132** of the chassis **106** to the lower surface **130** of the footbed **122**. The lower surface **130** of the footbed **122** may include an upper socket **136** facing the recess **126**. As described in greater detail below, the upper socket **136** is configured to interface with or receive an upper portion of the cushioning arrangement **108** to secure a position of the cushioning arrangement **108** within the recess **126**.

As described above, the chassis **106** is formed of a resilient polymeric material, such as foam or rubber, to impart properties of cushioning, responsiveness, and energy distribution to the foot of the wearer. Example resilient polymeric materials for the chassis **106** may include those based on foaming or molding one or more polymers, such as one or more elastomers (e.g., thermoplastic elastomers (TPE)). The one or more polymers may include aliphatic polymers, aromatic polymers, or mixtures of both; and may include homopolymers, copolymers (including terpolymers), or mixtures of both.

In some aspects, the one or more polymers may include olefinic homopolymers, olefinic copolymers, or blends thereof. Examples of olefinic polymers include polyethyl-

ene, polypropylene, and combinations thereof. In other aspects, the one or more polymers may include one or more ethylene copolymers, such as, ethylene-vinyl acetate (EVA) copolymers, EVOH copolymers, ethylene-ethyl acrylate copolymers, ethylene-unsaturated mono-fatty acid copolymers, and combinations thereof.

In further aspects, the one or more polymers may include one or more polyacrylates, such as polyacrylic acid, esters of polyacrylic acid, polyacrylonitrile, polyacrylic acetate, polymethyl acrylate, polyethyl acrylate, polybutyl acrylate, polymethyl methacrylate, and polyvinyl acetate; including derivatives thereof, copolymers thereof, and any combinations thereof.

In yet further aspects, the one or more polymers may include one or more ionomeric polymers. In these aspects, the ionomeric polymers may include polymers with carboxylic acid functional groups, sulfonic acid functional groups, salts thereof (e.g., sodium, magnesium, potassium, etc.), and/or anhydrides thereof. For instance, the ionomeric polymer(s) may include one or more fatty acid-modified ionomeric polymers, polystyrene sulfonate, ethylene-methacrylic acid copolymers, and combinations thereof.

In further aspects, the one or more polymers may include one or more styrenic block copolymers, such as acrylonitrile butadiene styrene block copolymers, styrene acrylonitrile block copolymers, styrene ethylene butylene styrene block copolymers, styrene ethylene butadiene styrene block copolymers, styrene ethylene propylene styrene block copolymers, styrene butadiene styrene block copolymers, and combinations thereof.

In further aspects, the one or more polymers may include one or more polyamide copolymers (e.g., polyamide-polyether copolymers) and/or one or more polyurethanes (e.g., crosslinked polyurethanes and/or thermoplastic polyurethanes). Examples of suitable polyurethanes include those discussed below for the barrier layers **142**, **144**. Alternatively, the one or more polymers may include one or more natural and/or synthetic rubbers, such as butadiene and isoprene.

When the resilient polymeric material is a foamed polymeric material, the foamed material may be foamed using a physical blowing agent which phase transitions to a gas based on a change in temperature and/or pressure, or a chemical blowing agent which forms a gas when heated above its activation temperature. For example, the chemical blowing agent may be an azo compound such as azodicarbonamide, sodium bicarbonate, and/or an isocyanate.

In some embodiments, the foamed polymeric material may be a crosslinked foamed material. In these embodiments, a peroxide-based crosslinking agent such as dicumyl peroxide may be used. Furthermore, the foamed polymeric material may include one or more fillers such as pigments, modified or natural clays, modified or unmodified synthetic clays, talc glass fiber, powdered glass, modified or natural silica, calcium carbonate, mica, paper, wood chips, and the like.

The resilient polymeric material may be formed using a molding process. In one example, when the resilient polymeric material is a molded elastomer, the uncured elastomer (e.g., rubber) may be mixed in a Banbury mixer with an optional filler and a curing package such as a sulfur-based or peroxide-based curing package, calendared, formed into shape, placed in a mold, and vulcanized.

In another example, when the resilient polymeric material is a foamed material, the material may be foamed during a molding process, such as an injection molding process. A thermoplastic polymeric material may be melted in the barrel of an injection molding system and combined with a physical or chemical blowing agent and optionally a crosslinking agent, and then injected into a mold under conditions which activate the blowing agent, forming a molded foam.

Optionally, when the resilient polymeric material is a foamed material, the foamed material may be a compression molded foam. Compression molding may be used to alter the physical properties (e.g., density, stiffness and/or durometer) of a foam, or to alter the physical appearance of the foam (e.g., to fuse two or more pieces of foam, to shape the foam, etc.), or both.

The compression molding process desirably starts by forming one or more foam preforms, such as by injection molding and foaming a polymeric material, by forming foamed particles or beads, by cutting foamed sheet stock, and the like. The compression molded foam may then be made by placing the one or more preforms formed of foamed polymeric material(s) in a compression mold, and applying sufficient pressure to the one or more preforms to compress the one or more preforms in a closed mold. Once the mold is closed, sufficient heat and/or pressure is applied to the one or more preforms in the closed mold for a sufficient duration of time to alter the preform(s) by forming a skin on the outer surface of the compression molded foam, fuse individual foam particles to each other, permanently increase the density of the foam(s), or any combination thereof. Following the heating and/or application of pressure, the mold is opened and the molded foam article is removed from the mold.

When included, the cradle **110** is disposed within the recess **126** of the chassis **106** and extends from the first end wall **134** of the forefoot support member **124** to the second end wall **135** of the chassis **106**. The cradle **110** includes an inner surface **138** that faces the recess **126** and is configured to interface with a lower portion of the cushioning arrangement **108**. For instance, the inner surface **138** may define a lower socket **140** configured to receive the lower portion of the cushioning arrangement **108**. Thus, the lower surface **130** of the footbed **122** and the inner surface **138** of the cradle **110** are arranged on opposite sides of the recess **126** and cooperate to define the height of the recess **126**. The cradle **110** includes one or more materials having a greater hardness than the materials of the chassis **106** and the outsole **104**. Accordingly, the cradle **110** provides a stiffer stabilizing interface between the cushioning arrangement **108** and the ground surface.

With continued reference to FIGS. **1** and **2**, the cushioning arrangement **108** of the midsole **102** includes the lower cushioning element **112** and the upper cushioning element **114** arranged in a stacked configuration within the recess **126**. The cushioning arrangement **108** may further include the support plate **116** interposed between the lower cushioning element **112** and the upper cushioning element **114**. The cushioning elements **112**, **114** include resilient and compressible materials, and are configured to provide cushioning in the heel region **24**. Conversely, the support plate **116** may include materials having a greater hardness than the cushioning elements **112**, **114** such that the support plate **116** provides a stabilizing interface between the cushioning elements **112**, **114**.

In the illustrated example, each of the cushioning elements **112**, **114** is formed as a bladder **112**, **114** having an interior void filled with a compressible material. In this example, each of the bladders **112**, **114** has the same configuration and size, where the lower bladder **112** is attached to the cradle **110** and faces upward while the upper bladder **114** is attached to the lower surface **130** of the

footbed **122** and faces downward, as shown in FIGS. **7-8**. As shown in the cross-sectional views of FIGS. **1** and **2**, each of the bladders **112**, **114** may be formed by an opposing pair of barrier layers **142**, **144**, which can be joined to each other at a peripheral seam to define an overall shape of the bladders **112**, **114**. As discussed below, the barrier layers **142**, **144** include a substantially flat base barrier layer **142** attached to the midsole **102** and a deformable cushioning barrier layer **144** extending into the recess **126**.

As used herein, the term "barrier layer" (e.g., barrier layers **142**, **144**) encompasses both monolayer and multilayer films. In some embodiments, one or both of the barrier layers **142**, **144** are each produced (e.g., thermoformed or blow molded) from a monolayer film (a single layer). In other embodiments, one or both of the barrier layers **142**, **144** are each produced (e.g., thermoformed or blow molded) from a multilayer film (multiple sublayers). In either aspect, each layer or sublayer can have a film thickness ranging from about 0.2 micrometers to about be about 1 millimeter. In further embodiments, the film thickness for each layer or sublayer can range from about 0.5 micrometers to about 500 micrometers. In yet further embodiments, the film thickness for each layer or sublayer can range from about 1 micrometer to about 100 micrometers.

One or both of the barrier layers **142**, **144** can independently be transparent, translucent, and/or opaque. As used herein, the term "transparent" for a barrier layer and/or a fluid-filled chamber means that light passes through the barrier layer in substantially straight lines and a viewer can see through the barrier layer. In comparison, for an opaque barrier layer, light does not pass through the barrier layer and one cannot see clearly through the barrier layer at all. A translucent barrier layer falls between a transparent barrier layer and an opaque barrier layer, in that light passes through a translucent layer but some of the light is scattered so that a viewer cannot see clearly through the layer.

The barrier layers **142**, **144** can each be produced from an elastomeric material that includes one or more thermoplastic polymers and/or one or more cross-linkable polymers. In an aspect, the elastomeric material can include one or more thermoplastic elastomeric materials, such as one or more thermoplastic polyurethane (TPU) copolymers, one or more ethylene-vinyl alcohol (EVOH) copolymers, and the like.

As used herein, "polyurethane" refers to a copolymer (including oligomers) that contains a urethane group (—N(C═O)O—). These polyurethanes can contain additional groups such as ester, ether, urea, allophanate, biuret, carbodiimide, oxazolidinyl, isocyanurate, uretdione, carbonate, and the like, in addition to urethane groups. In an aspect, one or more of the polyurethanes can be produced by polymerizing one or more isocyanates with one or more polyols to produce copolymer chains having (—N(C═O)O—) linkages.

Examples of suitable isocyanates for producing the polyurethane copolymer chains include diisocyanates, such as aromatic diisocyanates, aliphatic diisocyanates, and combinations thereof. Examples of suitable aromatic diisocyanates include toluene diisocyanate (TDI), TDI adducts with trimethyloylpropane (TMP), methylene diphenyl diisocyanate (MDI), xylene diisocyanate (XDI), tetramethylxylylene diisocyanate (TMXDI), hydrogenated xylene diisocyanate (HXDI), naphthalene 1,5-diisocyanate (NDI), 1,5-tetrahydronaphthal ene diisocyanate, para-phenylene diisocyanate (PPDI), 3,3'-dimethyldiphenyl-4, 4'-diisocyanate (DDDI), 4,4'-dibenzyl diisocyanate (DBDI), 4-chloro-1,3-phenyl en e diisocyanate, and combinations thereof. In some embodiments, the copolymer chains are substantially free of aromatic groups.

In particular aspects, the polyurethane polymer chains are produced from diisocyanates including HMDI, TDI, MDI, H12 aliphatics, and combinations thereof. In an aspect, the thermoplastic TPU can include polyester-based TPU, polyether-based TPU, polycaprolactone-based TPU, polycarbonate-based TPU, polysiloxane-based TPU, or combinations thereof.

In another aspect, the polymeric layer can be formed of one or more of the following: EVOH copolymers, poly (vinyl chloride), polyvinylidene polymers and copolymers (e.g., polyvinylidene chloride), polyamides (e.g., amorphous polyamides), amide-based copolymers, acrylonitrile polymers (e.g., acrylonitrile-methyl acrylate copolymers), polyethylene terephthalate, polyether imides, polyacrylic imides, and other polymeric materials known to have relatively low gas transmission rates. Blends of these materials, as well as with the TPU copolymers described herein and optionally including combinations of polyimides and crystalline polymers, are also suitable.

The barrier layers **142**, **144** may include two or more sublayers (multilayer film) such as shown in Mitchell et al., U.S. Pat. No. 5,713,141 and Mitchell et al., U.S. Pat. No. 5,952,065, the disclosures of which are incorporated by reference in their entireties. In embodiments where the barrier layers **142**, **144** include two or more sublayers, examples of suitable multilayer films include microlayer films, such as those disclosed in Bonk et al., U.S. Pat. No. 6,582,786, which is incorporated by reference in its entirety. In further embodiments, the barrier layers **142**, **144** may each independently include alternating sublayers of one or more TPU copolymer materials and one or more EVOH copolymer materials, where the total number of sublayers in each of the barrier layers **142**, **144** includes at least four (4) sublayers, at least ten (10) sublayers, at least twenty (20) sublayers, at least forty (40) sublayers, and/or at least sixty (60) sublayers.

The bladders **112**, **114** can be produced from the barrier layers **142**, **144** using any suitable technique, such as thermoforming (e.g. vacuum thermoforming), blow molding, extrusion, injection molding, vacuum molding, rotary molding, transfer molding, pressure forming, heat sealing, casting, low-pressure casting, spin casting, reaction injection molding, radio frequency (RF) welding, and the like. In an aspect, the barrier layers **142**, **144** can be produced by co-extrusion followed by vacuum thermoforming to form the profile of the cushioning arrangement **108**, which can optionally include one or more valves (e.g., one way valves) that allows the cushioning arrangement **108** to be filled with the fluid (e.g., gas).

The barrier layers **142**, **144** have a low gas transmission rate to preserve its retained gas pressure. In some embodiments, the barrier layers **142**, **144** have a gas transmission rate for nitrogen gas that is at least about ten (10) times lower than a nitrogen gas transmission rate for a butyl rubber layer of substantially the same dimensions. In an aspect, cushioning arrangement **108** has a nitrogen gas transmission rate of 15 cubic-centimeter/square-meter·atmosphere·day ($cm^3/m^2 \cdot atm \cdot day$) or less for an average film thickness of 500 micrometers (based on thicknesses of barrier layers **142**, **144**). In further aspects, the transmission rate is 10 $cm^3/m^2 \cdot atm \cdot day$ or less, 5 $cm^3/m^2 \cdot atm \cdot day$ or less, or 1 $cm^3/m^2 \cdot atm \cdot day$ or less.

As previously mentioned, the bladder **112**, **114** may be generally described as including a base barrier layer **142**

configured to attach to one of the sockets **136**, **140**, and a cushioning barrier layer **144** configured to extend into the recess **126**. The base barrier layer **142** of each bladder **112**, **114** is substantially flat, while the cushioning barrier layer **144** is contoured and substantially defines the geometry of the bladder **112**, **114**. The barrier layers **142**, **144** are joined together along the peripheral seam to define an outer peripheral profile of the bladders **112**, **114**.

Interior surfaces of the barrier layers **142**, **144** are spaced apart from each other to define an interior void filled with a compressible material. The interior voids of the bladders **112**, **114** can be provided in a fluid-filled (e.g., as provided in footwear **10**) or in an unfilled state. The bladders **112**, **114** can be filled to include any suitable fluid, such as a gas or liquid. In an aspect, the gas can include air, nitrogen (N_2), or any other suitable gas. The fluid provided to the bladders **112**, **114** can result in the bladders **112**, **114** being pressurized at a first pressure. In some examples, the first pressure ranges from 0 psi to 20 psi, and more particularly from 5 psi to 15 psi, and even more particularly from 7 psi to 10 psi. The second pressure may range from 0 psi to 35 psi, and more particularly from 15 psi to 30 psi, and even more particularly from 20 psi to 25 psi. Alternatively, the fluid provided to the bladders **112**, **114** can be at atmospheric pressure such that the bladders **112**, **114** are not pressurized but, rather, simply contain a volume of fluid at atmospheric pressure. In other aspects, the bladders **112**, **114** can alternatively include other compressible media, such as pellets, beads, ground recycled material, and the like (e.g., foamed beads and/or rubber beads).

With reference to FIGS. **1-8**, each bladder **112**, **114** includes a plurality of interconnected hemispherical lobes **146***a*-**146***d* and an interior depression **148** all defined by the cushioning barrier layer **144** on a first side of the bladder **112**, **114**. In the illustrated example, the lobes **146***a*-**146***d* include four lobes **146***a*-**146***d* arranged in a quad-shaped configuration. In other words, the lobes **146***a*-**146***d* may be described as being arranged in a two-by-two configuration, where two of the lobes **146***a*-**146***d* are arranged along a first side of the bladder **112**, **114** and another two of the lobes **146***a*-**146***d* are arranged along an opposite second side of the bladder **112**, **114**.

As shown, each of the lobes **146***a*-**146***d* has a hemispherical shape defined by the cushioning barrier layer **144** on the first side of the bladder **112**, **114**. Here, each of the lobes **146***a*-**146***d* has the same size and shape, such that a radius R_{146} of each lobe **146***a*-**146***d* defines a maximum thickness T_{112}, T_{114} of the bladder **112**, **114** (FIG. **5**). As discussed above, the lobes **146***a*-**146***d* are arranged in a quad-shaped pattern such that center points of each of the lobes **146***a*-**146***d* are each positioned at a corner of a theoretical square pattern. Thus, center points of adjacent ones of the lobes **146***a*-**146***d* are spaced apart from each other by a distance corresponding to a length of each side of the square pattern. As shown, the distances between adjacent ones of the lobes **146***a*-**146***d* are less than the twice the radius R_{146} of each of the lobes **146***a*-**146***d* such that adjacent ones of the lobes **146***a*-**146***d* overlap or intersect with each other.

With continued reference to FIGS. **4-7**, the cushioning barrier layer **144** defines the interior depression **148** formed between the lobes **146***a*-**146***d*. Generally, the interior depression **148** is formed by a portion of the bladder **112**, **114** having a reduced thickness relative to the lobes **146***a*-**146***d*. The interior depression **148** may be described as including a central portion **150** (FIG. **6**) surrounded by all of the lobes **146***a*-**146***d*, and a plurality of valleys or channels **150***a*-**150***d* (FIGS. **5-7**) extending radially outwardly from the central portion **150**. Here, each of the channels **150***a*-**150***d* is defined where adjacent ones of the hemispherical lobes **146***a*-**146***d* intersect with each other. The channels **150***a*-**150***d* may have a concave curvature extending between adjacent ones of the lobes **146***a*-**146***d*.

Referring to FIGS. **6-8**, the support plate **116** of the present example is a rigid or semi-rigid (i.e., greater hardness than the cushioning elements **112**, **114**) member configured to provide a stabilizing interface between the upper and lower bladders **112**, **114** when the cushioning arrangement **108** is assembled. The support plate **116** includes upper and lower support surfaces **154** formed on opposite sides of the support plate **116**. The support surfaces **154** each include a plurality of receptacles **156** configured to receive one of the lobes **146***a*-**146***d* of one of the bladders **112**, **114**. Thus, a first one of the support surfaces **154** includes four of the receptacles **156** for receiving the lobes **146***a*-**146***d* of the lower bladder **112** and the opposite support surface **154** includes four of the receptacles **156** for receiving the lobes **146***a*-**146***d* of the upper bladder **114**. In the illustrated example, each of the receptacles **156** is a concave recess formed in or on the support surface **154** of the support plate **116**, which receives a distal end of one of the lobes **146***a*-**146***d*.

With reference to FIGS. **1**, **2** and **4-7**, when the cushioning arrangement **108** is assembled, the lobes **146***a*-**146***d* of the upper bladder **114** are arranged directly across the support plate **116** from the lobes **146***a*-**146***d* of the lower bladder **112**. Thus, the lobes **146***a*-**146***d* of the upper and lower bladders **112**, **114** are aligned with each other across the support plate **116** such that an overall thickness T_{108} of the cushioning arrangement **108** is defined by combined thicknesses of the lobes **146***a*-**146***d* of the lower bladder **112**, the support plate **116**, and the lobes **146***a*-**146***d* of the upper bladder **114**. Here, the lobes **146***a*-**146***d* of the lower bladder **112** may be described as indirectly contacting the lobes **146***a*-**146***d* via the support plate **116**.

With reference to FIGS. **1-8**, when the sole structure **100** is assembled, the cushioning arrangement **108** is received within the recess **126** between the footbed **122** of the chassis **106** and the cradle **110**. Particularly, a first end of the cushioning arrangement **108**, defined by the base barrier layer **142** of the upper cushioning element **114** is received within the upper socket **136** formed in the lower surface **130** of the footbed **122**. A second end of the cushioning arrangement **108**, which is formed at an opposite end of the cushioning arrangement **108** from the first end and defined by the base barrier layer **142** of the lower cushioning element **112**, is received within the lower socket **140** formed on the inner surface **138** of the cradle **110**. Accordingly, opposite ends of the cushioning arrangement **108** are embedded or captured within the upper and lower sockets **136**, **140** to secure a position of the cushioning arrangement **108** within the recess **126**.

By arranging the lower and upper bladders **112**, **114** in the foregoing manner, the thickest portions of the bladders **112**, **114** (i.e., the lobes **146***a*-**146***d*) cooperate with each other to provide cushioning in the heel region of the sole structure **100**, while the interior depressions **148** of the bladders **112**, **114** are recessed from each other and the support plate **116** by a space or gap. Thus, when the cushioning arrangement **108** is compressed between the footbed **122** and the cradle **110**, the pressure within the lobes **146***a*-**146***d* may increase such that the compressible material (e.g., air) disposed within the lobes **146***a*-**146***d* is displaced to the lower pressure area of the interior depression **148** of the bladder **112**, **114**. As the compressible material flows from the lobes

146*a*-146*d* to the interior depression **148**, the pressure within the interior depression **148** increases, causing expansion of the cushioning barrier layer **144** along the interior depression **148**. Thus, the interior depression **148** serves as an accumulator for the fluid of the bladder **112**, **114** when the lobes **146***a*-**146***d* are compressed, which allows for a greater degree of compression.

During compression, the support plate **116** provides a rigid interface between the lobes **146***a*-**146***d* of the respective bladders **112**, **114**. In addition to securing a position of each of the lobes **146***a*-**146***d*, the support plate **116** may act as a damper to distribute compressive forces among the lobes **146***a*-**146***d* of the bladders **112**, **114**. For instance, when a compressive force is applied directly to one corner of the cushioning arrangement **108**, rather than have the entire compressive force be applied through a single opposing pair of the lobes **146***a*-**146***d* of the lower and upper bladders **112**, **114**, the support plate **116** may transfer at least a portion of the compressive force to adjacent ones of the lobes **146***a*-**146***d*.

The outsole **104** of the sole structure **100** extends continuously from the anterior end **12** to the posterior end **14** of the sole structure **100** and defines a ground-contacting surface of the footwear **10**. The outsole **104** includes an inner surface **160** attached to the bottom of the midsole **102** and an outer surface **162** formed on an opposite side from the inner surface **160** and defining the ground-contacting surface of the footwear. Optionally, the outsole **104** may be formed as a fragmentary structure including a first portion attached to the midsole **102** in a first region **20**, **22**, **24** and a second portion attached to the midsole **102** in a second region **20**, **22**, **24**.

The upper **200** is attached to the sole structure **100** and includes interior surfaces that define an interior void configured to receive and secure a foot for support on sole structure **100**. The upper **200** may be formed from one or more materials that are stitched or adhesively bonded together to form the interior void. Suitable materials of the upper may include, but are not limited to, mesh, textiles, foam, leather, and synthetic leather. The materials may be selected and located to impart properties of durability, air-permeability, wear-resistance, flexibility, and comfort.

With particular reference to FIGS. **9**-**13**, an article of footwear **10***a* is provided and includes a sole structure **100***a* and an upper **200***a* attached to the sole structure **100***a*. In view of the substantial similarity in structure and function of the components associated with the article of footwear **10** with respect to the article of footwear **10***a*, like reference numerals are used hereinafter and in the drawings to identify like components while like reference numerals containing letter extensions are used to identify those components that have been modified.

In the example of the article of footwear **10***a* shown in FIGS. **9**-**13**, the midsole **102***a* has a substantially similar configuration as the midsole **102** discussed above. Particularly, the midsole **102***a* includes a chassis **106***a* including the footbed **122**, a forefoot support member **124***a*, and a recess **126***a* formed in the heel region **24**. The midsole **102** also includes the cushioning arrangement **108** and a cradle **110***a*.

As shown in FIGS. **11** and **12**, the midsole **102***a* of the present example includes a bottom surface **132***a* having a laterally extending arch or recess **133** in the mid-foot region **22**. The outsole **104***a* of the sole structure **100***a* includes a first fragment **164***a* attached to the bottom surface **132***a* on first side of the recess **133** and a second segment **164***b* attached to the bottom surface on a second side of the recess **133**. Thus, the portion of the bottom surface **132***a* including the recess **133** is exposed between the first and second fragments **164***a*, **164***b* of the outsole **104**.

As shown in FIGS. **11**-**14**, the second fragment **164***b* of the outsole **104** may include a depression **166** formed in the outer surface **162**. The depression **166** is aligned with the cushioning arrangement **108** and may include a peripheral profile corresponding in shape to the peripheral profile of the cushioning arrangement **108**. The depression **166** provides the heel portion of the outsole **104***a* with a trampoline-like structure between the cushioning arrangement **108** and the ground surface, which provides an added degree of cushioning and resiliency in the heel region **24**.

With particular reference to FIGS. **15**A and **15**B, a cushioning arrangement **108***a* is provided and includes the upper cushioning element **114** and the lower cushioning element **112**. In view of the substantial similarity in structure and function of the components associated with the cushioning arrangement **108** with respect to the cushioning arrangement **108***a*, like reference numerals are used hereinafter and in the drawings to identify like components while like reference numerals containing letter extensions are used to identify those components that have been modified.

In the example of the cushioning arrangement **108***a* shown in FIGS. **15**A and **15**B, the upper and lower cushioning elements **112**, **114** are again provided as upper and lower bladders **112**, **114** with distal ends of the lobes **146***a*-**146***b* of the upper bladder **114** aligned with distal ends of the lobes **146***a*-**146***d* of the lower bladder **112**. In this example, the support plate **116** is omitted such that distal ends of the lobes **146***a*-**146***d* of the bladders **112**, **114** are in direct contact with each other. Here, the distal ends of the lobes **146***a*-**146***d* of the lower and upper bladders **112**, **114** are convex such that the lobes **146***a*-**146***d* of the upper bladder **114** and the lobes **146***a*-**146***d* of the lower bladder **112** are attached or bonded to each other in a point-contact relationship.

In contrast to the example of the cushioning arrangement **108** described previously, where the lobes **146***a*-**146***d* are received within concave receptacles **156** of the support plate **116** to distribute compressive forces, the direct, point-contact relationship between the lobes **146***a*-**146***d* of the bladders **112**, **114** in the current example provides localized compression. For instance, a compressive force applied at one of the lobes **146***a*-**146***d* of the upper bladder **114** is transferred directly to the corresponding lobe **146***a*-**146***d* of the lower bladder **112** through the respective distal ends. As the respective lobes **146***a*-**146***d* are deformed under the compressive force, the interface between the lobes **146***a*-**146***d* transitions from a point-contact to an area-contact. Meanwhile, the compressible material (e.g., air) within the compressed lobes **146***a*-**146***d* is displaced to the interior depression **148** and the other lobes **146***a*-**146***d* until pressures within the interior voids of the bladders **112**, **114** reaches equilibrium.

With particular reference to FIGS. **16**A and **16**B, a cushioning arrangement **108***b* is provided and includes a lower cushioning element **112***a* and an upper cushioning element **114***a*. In view of the substantial similarity in structure and function of the components associated with the cushioning arrangement **108** with respect to the cushioning arrangement **108***b*, like reference numerals are used hereinafter and in the drawings to identify like components while like reference numerals containing letter extensions are used to identify those components that have been modified.

In the example of the cushioning arrangement **108***b* shown in FIGS. **16**A and **16**B, an upper cushioning element **114***a* is provided in direct contact with the lower cushioning

element **112***a*, similar to the arrangement discussed above with respect to the cushioning arrangement **108***a* of FIGS. **15**A and **15**B. However, in the illustrated example, the cushioning barrier layers **144***a* of the cushioning elements **112***a*, **114***a* define a first pair of the hemispherical lobes **146***b*, **146***c* discussed above at opposite corners of the cushioning element **112***a*, **114***a* and a pair of truncated lobes **146***e*, **146***f* at the other two corners of the cushioning element **112***a*, **114***a*.

As shown, the truncated lobes **146***e*, **146***f* include receptacles **156** configured to mate with the distal ends of the hemispherical lobes **146***b*, **146***c* of the opposing bladder **112***a*, **114***a* when the bladders **112***a*, **114***a* are assembled. Here, the receptacles **156***a* are similar to the receptacles **156** formed in the support plate **116** discussed above. For instance, the receptacles **156***a* have a concave shape corresponding to the convex shape of the distal ends of the lobes **146***b*, **146***c*. Thus, when the cushioning arrangement **108***b* is assembled, the truncated lobes **146***e*, **146***f* of each of the cushioning elements **112***a*, **114***a* are aligned and received within the receptacles **156***a* of the lobes **146***e*, **146***f* of the other cushioning element **112***a*, **114***a* in a ball-and-socket configuration.

With particular reference to FIGS. **17**-**25**, an article of footwear **10***b* is provided and includes a sole structure **100***b* and the upper **200** attached to the sole structure **100***b*. In view of the substantial similarity in structure and function of the components associated with the article of footwear **10** with respect to the article of footwear **10***b*, like reference numerals are used hereinafter and in the drawings to identify like components while like reference numerals containing letter extensions are used to identify those components that have been modified.

As shown in FIGS. **17** and **18**, the article of footwear **10***b* includes a sole structure **100***b* having a midsole **102***b* and an outsole **104***b*. The midsole **102***b* includes a chassis **106***b* having the footbed **122** formed in an upper portion and a forefoot support member **124***b* and recess **126***b* formed on a bottom portion. The midsole **102***b* further includes a cushioning arrangement **108***c* received within the recess **126***b* of the chassis **106***b*, between the footbed **122** and the outsole **104***b*.

With reference to FIGS. **20**-**25**, cross-sections of the sole structure **100***b* are provided to illustrate the construction of the cushioning arrangement **108***c*. Here, the cushioning arrangement **108***c* includes the lower cushioning element **112** and an upper cushioning element **114***b* with a support plate **116***b* interposed between the cushioning elements **112**, **114***b*.

In this example, the upper cushioning element **114***b* has a substantially similar configuration to the upper cushioning element **114** discussed above. Accordingly, the upper cushioning element **114***b* is configured as a bladder **114***b* having a base barrier layer **142***b* and a cushioning barrier layer **144***b* defining a plurality of lobes **146***g*-**146***j* and an interior depression **148***b*. The interior depression **148***b* includes a central portion **150***b* and a plurality of channels **152***g*-**152***j* extending radially outwardly from the central portion **150***b*. Thus, the channels **152***g*-**152***j* of the interior depression **148***b* extend between adjacent ones of the lobes **148***g*-**148***j*. While the upper bladder **114***b* has a substantially similar geometry as the lower bladder **112**, the upper bladder **114***b* has different dimensions than the lower bladder **112**. Particularly, the lobes **148***g*-**148***j* have a radius R_{146g} that is smaller than the radius R_{146a} of the lobes **146***a*-**146***d* of the lower bladder **112**. Additionally or alternatively, adjacent ones of the lobes **146***g*-**146***j* of the upper bladder **114***b* may be spaced apart by a distance that is less than the distance between adjacent ones of the lobes **146***a*-**146***d* of the lower bladder **112**.

The support plate **116***b* of the cushioning arrangement **108***c* includes a pair of support surface **154***a*, **154***b* formed on opposite sides of the support plate **116***b*. Unlike the support plate **116** described above, which is substantially flat and includes the receptacles **156**, the support plate **116***b* of the current example is contoured such that the upper support surface **154***a* mates with the cushioning barrier layer **144***b* of the upper bladder **114***b* and the lower support surface **154***b* mates with the cushioning barrier layer **144** of the lower bladder **112**. Thus, the support plate **116***b* may include a central hub **168** configured to interface with the central portions **150**, **150***b* of the bladders **112**, **114***b* and an undulated peripheral rim **170** configured to mate with the lobes **146***a*-**146***d*, **146***g*-**146***j* and channels **152***a*-**152***d*, **152***g*-**152***j*.

Referring to FIGS. **17**, **18**, and **22**-**23**, the cushioning arrangement **108***c* includes the upper bladder **114***b* and the lower bladder **112** arranged in a stacked configuration with the support plate **116***b* interposed therebetween. As in the previous examples, the upper bladder **114***b* and the lower bladder **112** are arranged such that the cushioning barrier layers **144**, **144***b* face each other. However, in the current example, the lower bladder **112** is rotated relative to the longitudinal axis A_{10} and the upper bladder **114***b* such that the lobes **146***a*-**146***d* of the lower bladder **112** are offset (i.e., not vertically aligned) from the lobes **146***g*-**146***j* of the upper bladder **114***b*. As shown in FIGS. **21** and **22**, the lobes **146***a*-**146***d* of the lower bladder **112** are received within the channels **152***g*-**152***j* of the upper bladder **114***b*. Likewise, the lobes **146***g*-**146***j* of the upper bladder **114***b* are received within the channels **152***a*-**152***d* of the lower bladder **112**.

As provided above, the central hub **168** of the support plate **116***b* is received within the central portions **150**, **150***b* of the bladders **112**, **114***b*. As shown in FIG. **23**, the central hub **168** is disposed between the opposing (i.e., facing) portions of the cushioning barrier layers **144**, **144***b* forming the central portions **150**, **150***b* of the bladders **112**, **114***b*. Thus, the central hub **168** fills a space between the central portions **150**, **150***b* of the bladders **112**, **114***b*.

As shown in FIGS. **17**, **18**, **22**, and **24** the undulated peripheral rim **170** of the support plate **116***b* is interposed between the lobes **146***a*-**146***d*, **146***g*-**146***j* and channels **152***a*-**152***d*, **152***g*-**152***j* of the respective bladders **112**, **114***b*. The peripheral rim **170** may be described as including first undulations **172***a*-**172***d* and second undulations **172***g*-**172***j* alternatingly arranged around the central hub **168**. The first undulations **172***a*-**172***d* are configured to receive corresponding lobes **146***a*-**146***d* of the lower bladder **112** and to be received within the channels **152***g*-**152***j* of the upper bladder **114***b*. The second undulations **172***g*-**172***j* are configured to receive the corresponding lobes **146***g*-**146***j* of the upper bladder **114***b* and to be received within the channels **152***a*-**152***d* of the lower bladder **112**. Thus, the undulations **172***a*-**172***d*, **172***g*-**172***j* function as receptacles **172***a*-**172***d*, **172***g*-**172***j* for the corresponding lobes **146***a*-**146***d*, **146***g*-**146***j* of the bladders **112**, **114***b*.

A diameter of the outer periphery **174** of the support plate **116***b* may also be undulated such that portions of the outer periphery **174** corresponding to the first undulations **172***a*-**172***d* terminate at the distal ends of the lobes **146***a*-**146***d* of the lower bladder **112** (FIGS. **20** and **23**) and portions of the outer periphery **174** corresponding to the second undulations **172***g*-**172***j* terminate at the distal ends of the lobes **146***g*-**146***j* of the upper bladder **114***b* (FIGS. **22** and **24**). Thus, the peripheral rim **170** of the support plate **116***b* fills a space

formed between inner portions of the bladders **112**, **114***b*, while the outer portions of the bladders **112**, **114***b* are exposed and unrestricted.

With continued reference to FIGS. **20-24**, the cushioning arrangement **108***c* is disposed within the recess **126** of the chassis **106** such that a first end of the cushioning arrangement **108***c* formed by the base barrier layer **142***b* of the upper bladder **114***b* is received within the upper socket **136** of the footbed **122** and a second end of the cushioning arrangement **108***c* formed by the base barrier layer **142** of the lower bladder **112** is received within a lower socket **140***b* formed in the inner surface **160***b* of the outsole **104***b*. Thus, in this example, cradle **110** is omitted and the cushioning arrangement **108***c* is attached directly to the outsole **104***b*.

As shown, the cushioning arrangement **108***c* is oriented within the recess **126** such that a first pair of opposing lobes **146***a*, **146***c* of the lower bladder **112** are aligned with the longitudinal axis A_{10}, and the second pair of opposing lobes **146***b*, **146***d* of the lower bladder **112** are aligned across the longitudinal axis A_{10c}. Conversely, the upper bladder **114***b* is oriented such that a first pair of adjacent lobes **146***g*, **146***i* are aligned with the longitudinal axis A_{10} along the lateral side **16** and a second pair of adjacent lobes **146***h*, **146***j* are aligned with the longitudinal axis A_{10} along the medial side **18**.

When the heel region **24** of the sole structure **100***b* is compressed, the compression forces applied to the cushioning arrangement **108***c* are distributed among the inner portions of the bladders **112**, **114***b*. Particularly, the support plate **116***b* distributes the compression forces among the inner portions of the lobes **146***a*-**146***d*, **146***g*-**146***j*. Because the support plate **116***b* fills the spaces formed between the inner portions of the bladders **112**, **114***b*, the interior depressions **148**, **148***b* of the bladders **112**, **114***b* do not deform to accommodate the pressure increase within the bladders **112**, **114***b*. In this example, the increased pressure within the compressed bladders **112**, **114***b* is accommodated by the exposed outer portions of the lobes **146***a*-**146***d*, **146***g*-**146***j*. Thus, the rotated and stacked configuration of the cushioning arrangement **108***c* may result in a cushioning arrangement **108***c* with a firmer feel than the cushioning arrangements discussed above, as deformation of the cushioning barrier layers **142**, **144***b* is restricted by the support plate **116***b*.

Optionally, the midsole **102** may include a pair of braces **176***a*, **176***b* surrounding openings of the recess **126***c* on opposite sides **16**, **18** of the sole structure **100***b*. The braces **176***a*, **176***b* may be formed of a material having a greater hardness than the material of the chassis **106**, such that the braces **176***a*, **176***b* provide added strength around the openings of the recess **126***b*.

With particular reference to FIGS. **23**A and **26**B, a cushioning arrangement **108***d* is provided and includes the upper cushioning element **114***b* and the lower cushioning element **112** described above. In view of the substantial similarity in structure and function of the components associated with the cushioning arrangement **108** with respect to the cushioning arrangement **108***d*, like reference numerals are used hereinafter and in the drawings to identify like components while like reference numerals containing letter extensions are used to identify those components that have been modified.

The cushioning arrangement **108***d* of FIGS. **26**A and **26**B is substantially similar to the cushioning arrangement **108***b* previously described. However, in this configuration, the support plate **116***b* is omitted from the cushioning arrangement **108***c* such that the cushioning barrier layers **144**, **144***b* mate directly with each other. As shown in FIG. **26**B, the direct relationship between the bladders **112**, **114***b* results in line-contact between the lobes **146***a*-**146***d*, **146***g*-**146***j* and the corresponding channels **152***g*-**152***j*, **152***a*-**152***d*. Additionally, the central portions **150**, **150***b* of the bladders **112**, **114***b* are spaced apart from each other. Accordingly, the cushioning arrangement **108***d* may have a softer feel than a cushioning arrangement **108***b* having the same interior void pressure, as deformation of the barrier layers **144**, **144***b* of the cushioning arrangement **108***d* is not restricted by the support plate **116***b*.

With particular reference to FIGS. **27**A and **27**B, a cushioning arrangement **108***e* is provided and includes the upper cushioning element **114** and the lower cushioning element **112**. In view of the substantial similarity in structure and function of the components associated with the cushioning arrangement **108** with respect to the cushioning arrangement **108***e*, like reference numerals are used hereinafter and in the drawings to identify like components while like reference numerals containing letter extensions are used to identify those components that have been modified.

The cushioning arrangement **108***e* of FIGS. **27**A and **27**B is substantially similar to the cushioning arrangement **108***d* previously described. However, in this configuration, the bladders **112**, **114** are the same size as each other and are configured such that an inner region (i.e., radially inwardly of the distal ends of the lobes **146***a*-**146***d*) of the cushioning barrier layers **144** are in facing contact with each other. Thus, the bladders **112**, **114** have a surface-contact bonding area, which provides greater stability and a firmer feel in comparison to the line-contact bonding of the cushioning arrangement **108***d*.

With particular reference to FIGS. **28-33**, an article of footwear **10***c* is provided and includes a sole structure **100***c* and the upper **200** attached to the sole structure **100***c*. In view of the substantial similarity in structure and function of the components associated with the article of footwear **10** with respect to the article of footwear **10***c*, like reference numerals are used hereinafter and in the drawings to identify like components while like reference numerals containing letter extensions are used to identify those components that have been modified.

As shown in FIGS. **28** and **29**, the article of footwear **10***c* includes a sole structure **100***c* having a midsole **102***c* and an outsole **104***c*. The midsole **102***c* includes a chassis **106***c* having the footbed **122** formed in an upper portion and a forefoot support member **124***c* and recess **126***c* formed on a lower portion. The midsole **102***b* further includes a cushioning arrangement **108***f* received within the recess **126***c* of the chassis **106***c*, between the footbed **122***c* and the outsole **104***c*. In this example, the midsole **102***c* includes a cradle **110***c* extending across a lower portion of the recess **126***c* between the cushioning arrangement **108***f* and the outsole **104***c*. The cradle **110***c* includes a lower socket **140***c* configured to receive an end of the cushioning arrangement **108***f*.

The cushioning arrangement **108***f* of the present example includes the lower cushioning element **112** formed as a bladder **114**, as previously described, and an upper cushioning element **114***c* including a resilient polymeric material. As shown, the upper cushioning element **114***c* is formed as a foam cushioning element **114***c* attached to and extending from the lower surface **130** of the footbed **122**. Here, the upper cushioning element **114***c* extends from the lower surface **130** to a substantially planar distal end surface **178** facing the lower bladder **112**. In the illustrated example, the upper cushioning element **114***c* is integrally formed with the footbed **122***c* of the chassis **106**. Thus, the upper cushioning element **114***c* and the footbed **122***c* may include the same foam material. However, in other examples, the upper

cushioning element **114***c* may be formed separately from the footbed **122***c* and/or include different resilient materials than the footbed **122***c*.

When the sole structure **100** is assembled, the distal ends of the lobes **146***a*-**146***d* of the lower bladder **112** form respective point-contacts with the planar distal end **178** of the upper cushioning element **114***c*. Thus, when the heel region **24** is compressed during use, the lobes **146***a*-**146***d* of the lower bladder **112** are compressed by the resilient distal end **178** of upper cushioning element **114**.

The following Clauses provide exemplary configurations for an article of footwear, a bladder for an article of footwear, or a sole structure for an article of footwear described above.

Clause 1: A sole structure for an article of footwear, the sole structure including a chassis including a recess formed between a first surface and a second surface facing the first surface, and a cushioning arrangement including a first cushioning element protruding from the first surface and including a plurality of lobes and a second cushioning element protruding from the second surface to a distal end contacting the plurality of lobes.

Clause 2: The sole structure of Clause 1, wherein the first cushioning element includes a bladder.

Clause 3: The sole structure of Clause 1 or 2, wherein a first side of the first cushioning element includes a substantially planar base and a second side of the first cushioning element includes the plurality of lobes formed on an opposite side from the base.

Clause 4: The sole structure of any one of Clauses 1-3, wherein lobes of the plurality of lobes are arranged in a quad-shaped configuration.

Clause 5: The sole structure of any one of Clauses 1-4, wherein each lobe of the plurality of lobes is hemispherical.

Clause 6: The sole structure of any one of Clauses 1-5, wherein the first surface includes a first socket receiving a first end of the cushioning arrangement including the first cushioning element.

Clause 7: The sole structure of any one of Clauses 1-6, further comprising a cradle defining the first surface of the recess, the cradle including a harder material than the chassis.

Clause 8: The sole structure of any one of Clauses 1-7, wherein a length of the recess extends between a first concave end and a second concave end.

Clause 9: The sole structure of any one of Clauses 1-8, further comprising a support plate disposed between the first cushioning element and the second cushioning element and including a plurality of receptacles receiving the plurality of lobes of the first cushioning element.

Clause 10: The sole structure of Clause 9, wherein the support plate includes a material having a greater hardness than each of the first cushioning element and the second cushioning element.

Clause 11: A sole structure for an article of footwear, the sole structure comprising a chassis including a recess formed between a first surface and a second surface facing the first surface, and a cushioning arrangement including a first cushioning element protruding from the first surface and including a first plurality of lobes, and a second cushioning element protruding from the second surface and including a second plurality of lobes contacting the first plurality of lobes.

Clause 12: The sole structure of Clause 11, wherein at least one of the first cushioning element and the second cushioning element includes a fluid-filled bladder.

Clause 13: The sole structure of Clause 11 or 12, wherein a first side of the first cushioning element includes a substantially planar first base and the second cushioning element includes a substantially planar second base, the first plurality of lobes disposed on an opposite side of the first cushioning element than the substantially planar first base and the second plurality of lobes disposed on an opposite side of the second cushioning element than the substantially planar second base.

Clause 14: The sole structure of any one of Clauses 11-13, wherein lobes of the first plurality of lobes and lobes of the second plurality of lobes are arranged in a quad-shaped configuration.

Clause 15: The sole structure of any one of Clauses 11-14, wherein each lobe of the first plurality of lobes and each lobe of the second plurality of lobes is hemispherical.

Clause 16: The sole structure of any one of Clauses 11-15, wherein the first surface includes a first socket receiving the first cushioning element and the second surface includes a second socket receiving the second cushioning element.

Clause 17: The sole structure of any one of Clauses 11-16, further comprising a cradle defining the first surface of the recess, the cradle including a harder material than the chassis.

Clause 18: The sole structure of any one of Clauses 11-17, wherein a length of the recess extends between a first concave end and a second concave end.

Clause 19: The sole structure of any one of Clauses 11-18, further comprising a support plate disposed between the first cushioning element and the second cushioning element and including a plurality of receptacles receiving lobes of the first cushioning element and lobes of the second cushioning element.

Clause 20: The sole structure of Clause 19, wherein the support plate includes a material having a greater hardness than each of the first cushioning element and the second cushioning element.

The foregoing description has been provided for purposes of illustration and description. It is not intended to be exhaustive or to limit the disclosure. Individual elements or features of a particular configuration are generally not limited to that particular configuration, but, where applicable, are interchangeable and can be used in a selected configuration, even if not specifically shown or described. The same may also be varied in many ways. Such variations are not to be regarded as a departure from the disclosure, and all such modifications are intended to be included within the scope of the disclosure.

What is claimed is:

1. A sole structure for an article of footwear, the sole structure comprising:

a chassis including a recess formed between a first surface and a second surface facing the first surface;

a cushioning arrangement including a first cushioning element protruding from the first surface and including a first central portion surrounded by a plurality of first lobes and a second cushioning element protruding from the second surface and including a second central portion surrounded by a plurality of second lobes, the first central portion spaced apart from the second central portion to form a gap; and

a support plate disposed between the plurality of first lobes and the plurality of second lobes, the support plate including a central hub filling the gap.

2. The sole structure of claim **1**, wherein the first cushioning element includes a bladder.

3. The sole structure of claim **1**, wherein a first side of the first cushioning element includes a substantially planar base and a second side of the first cushioning element includes the plurality of first lobes formed on an opposite side from the base.

4. The sole structure of claim **1**, wherein lobes of the plurality of first lobes and lobes of plurality of second lobes are arranged in a quad-shaped configuration.

5. The sole structure of claim **1**, wherein a length of the recess extends between a first concave end and a second concave end.

6. The sole structure of claim **1**, wherein the plurality of first lobes is offset from the plurality of second lobes.

7. The sole structure of claim **6**, wherein the plurality of first lobes faces the plurality of the second lobes.

8. The sole structure of claim **1**, wherein the support plate includes an undulating outer periphery.

9. The sole structure of claim **1**, wherein the support plate includes an undulated peripheral rim interposed between the first cushioning element and the second cushioning element.

10. An article of footwear incorporating the sole structure of claim **1**.

11. A sole structure for an article of footwear, the sole structure comprising:

an upper cushion including a first central portion surrounded by a first lobe and a second lobe;

a lower cushion including a second central portion surrounded by a third lobe and a fourth lobe, the first central portion spaced apart from the second central portion to form a gap; and

a support plate disposed between the upper cushion and the lower cushion, the support plate including a central hub filling the gap.

12. The sole structure of claim **11**, wherein the support plate includes an undulating outer periphery.

13. The sole structure of claim **11**, wherein support plate includes an undulated peripheral rim interposed between the first lobe and the second lobe, and the third lobe and the fourth lobe.

14. The sole structure of claim **11**, wherein the third lobe is disposed between the first lobe and the second lobe.

15. The sole structure of claim **14**, wherein the first lobe is disposed between the third lobe and the fourth lobe.

16. The sole structure of claim **11**, wherein the second lobe is aligned with the fourth lobe first lobe.

17. The sole structure of claim **16**, wherein the first lobe is aligned with the third lobe.

18. The sole structure of claim **11**, wherein the first lobe and the second lobe are separated by a first channel, the third lobe opposing the first channel.

19. The sole structure of claim **11**, wherein at least one of the upper cushion and the lower cushion is a fluid-filled chamber.

20. An article of footwear incorporating the sole structure of claim **11**.

* * * * *