US012407087B2

(12) **United States Patent**
Liao

(10) **Patent No.: US 12,407,087 B2**
(45) **Date of Patent: Sep. 2, 2025**

(54) **SEMICONDUCTOR STRUCTURES AND METHOD OF FORMING THE SAME**

(71) Applicant: **Taiwan Semiconductor Manufacturing Company, Ltd.**, Hsinchu (TW)

(72) Inventor: **Wen-Shiang Liao**, Miaoli County (TW)

(73) Assignee: **Taiwan Semiconductor Manufacturing Company, Ltd.**, Hsinchu (TW)

(*) Notice: Subject to any disclaimer, the term of this patent is extended or adjusted under 35 U.S.C. 154(b) by 959 days.

(21) Appl. No.: **17/361,269**

(22) Filed: **Jun. 28, 2021**

(65) **Prior Publication Data**

US 2022/0328952 A1 Oct. 13, 2022

Related U.S. Application Data

(60) Provisional application No. 63/172,714, filed on Apr. 9, 2021.

(51) **Int. Cl.**

H01Q 1/22	(2006.01)
H01L 21/48	(2006.01)
H01L 23/498	(2006.01)
H01Q 1/48	(2006.01)
H01L 23/00	(2006.01)
H01L 25/065	(2023.01)

(52) **U.S. Cl.**

CPC ***H01Q 1/2283*** (2013.01); ***H01L 21/4857*** (2013.01); ***H01L 23/49816*** (2013.01); ***H01L 23/49822*** (2013.01); ***H01L 23/49827*** (2013.01); ***H01Q 1/48*** (2013.01); *H01L 24/16* (2013.01); *H01L 25/0655* (2013.01); *H01L 2224/16227* (2013.01)

(58) **Field of Classification Search**

None

See application file for complete search history.

(56) **References Cited**

U.S. PATENT DOCUMENTS

8,993,380	B2	3/2015	Hou et al.	
9,281,254	B2	3/2016	Yu et al.	
9,299,649	B2	3/2016	Chiu et al.	
9,372,206	B2	6/2016	Wu et al.	
9,425,126	B2	8/2016	Kuo et al.	
9,443,783	B2	9/2016	Lin et al.	
9,461,018	B1	10/2016	Tsai et al.	
9,496,189	B2	11/2016	Yu et al.	
9,666,502	B2	5/2017	Chen et al.	
9,735,131	B2	8/2017	Su et al.	
9,740,079	B1 *	8/2017	Davids	G02B 6/1347
2014/0367867	A1 *	12/2014	Lin	H01L 24/19 257/777

(Continued)

Primary Examiner — Sue A Purvis
Assistant Examiner — Carnell Hunter, III
(74) *Attorney, Agent, or Firm* — JCIPRNET

(57) **ABSTRACT**

A semiconductor structure includes an antenna pad, a ground plane and a plurality of conductive vias. The ground plane is disposed over the antenna pad and includes a plurality of first conductive patterns separated from one another. The conductive vias are disposed between the antenna pad and the ground plane. The plurality of conductive vias are arranged to surround an area of the antenna pad and electrically connected to the antenna pad, and the plurality of first conductive patterns are overlapped with the area of the antenna pad.

20 Claims, 17 Drawing Sheets

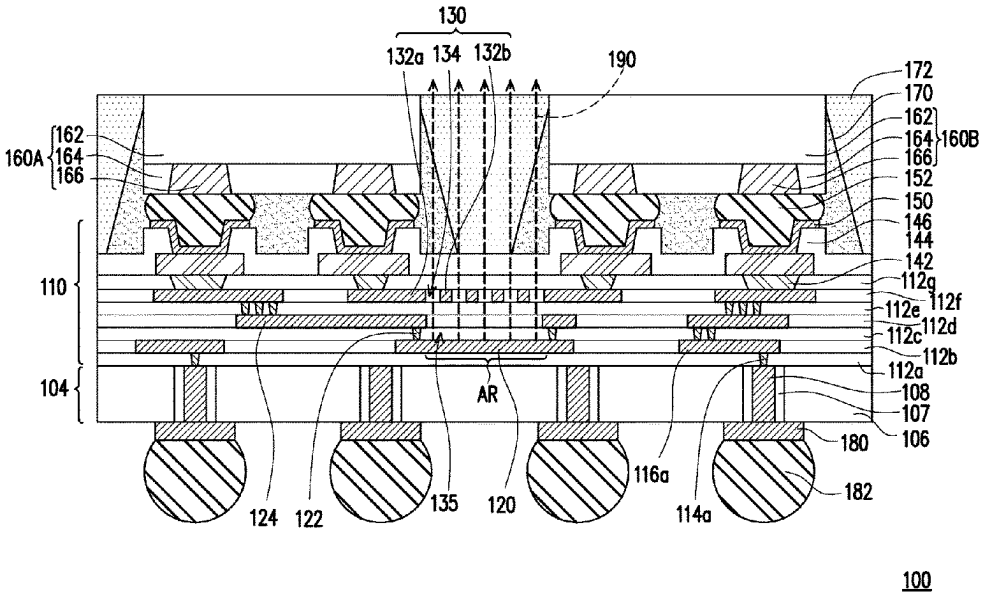

(56) **References Cited**

U.S. PATENT DOCUMENTS

2019/0103680	A1*	4/2019	Liao	H01Q 21/065
2020/0105687	A1*	4/2020	Wang	H01L 23/66
2021/0118828	A1*	4/2021	Franson	H01Q 21/0087

* cited by examiner

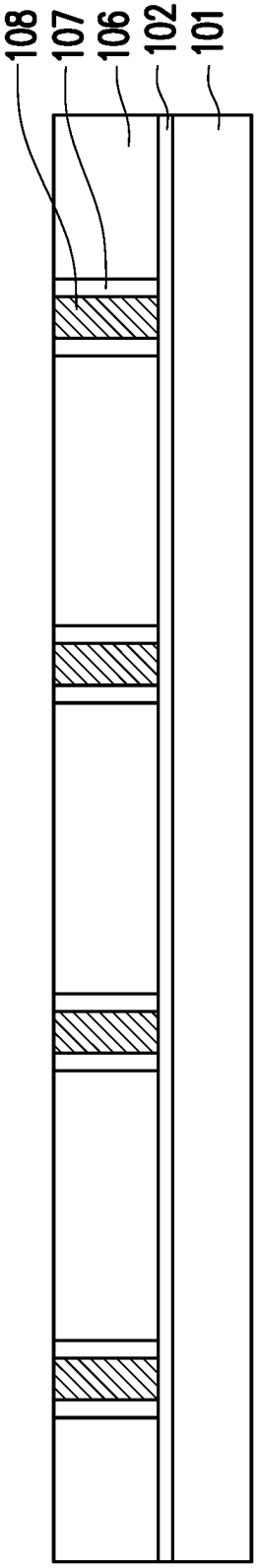
108
107
106
102
101

FIG. 1A

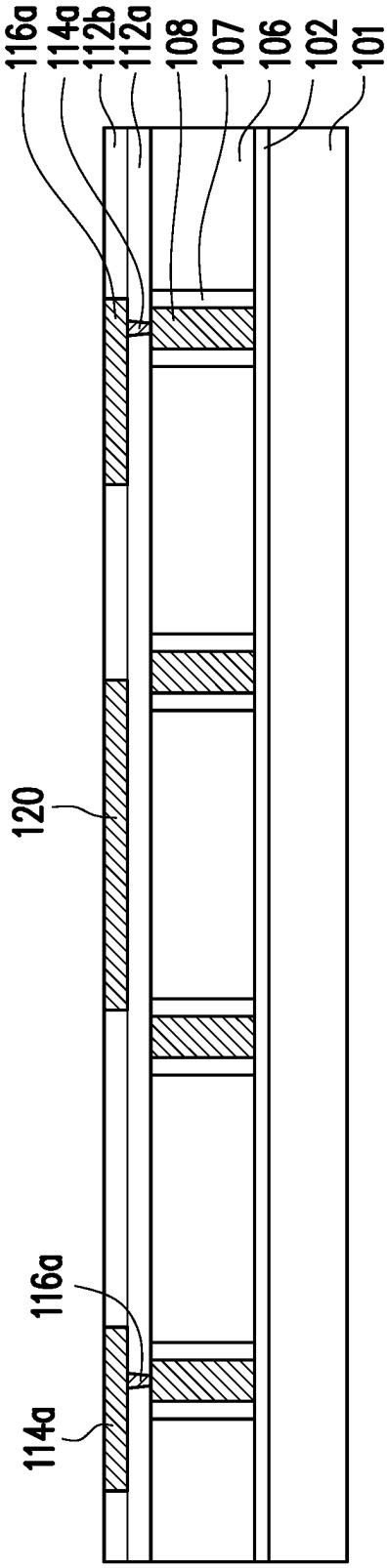
116a
114a
112b
112a
108
107
106
102
101
120
116a
114a

FIG. 1B

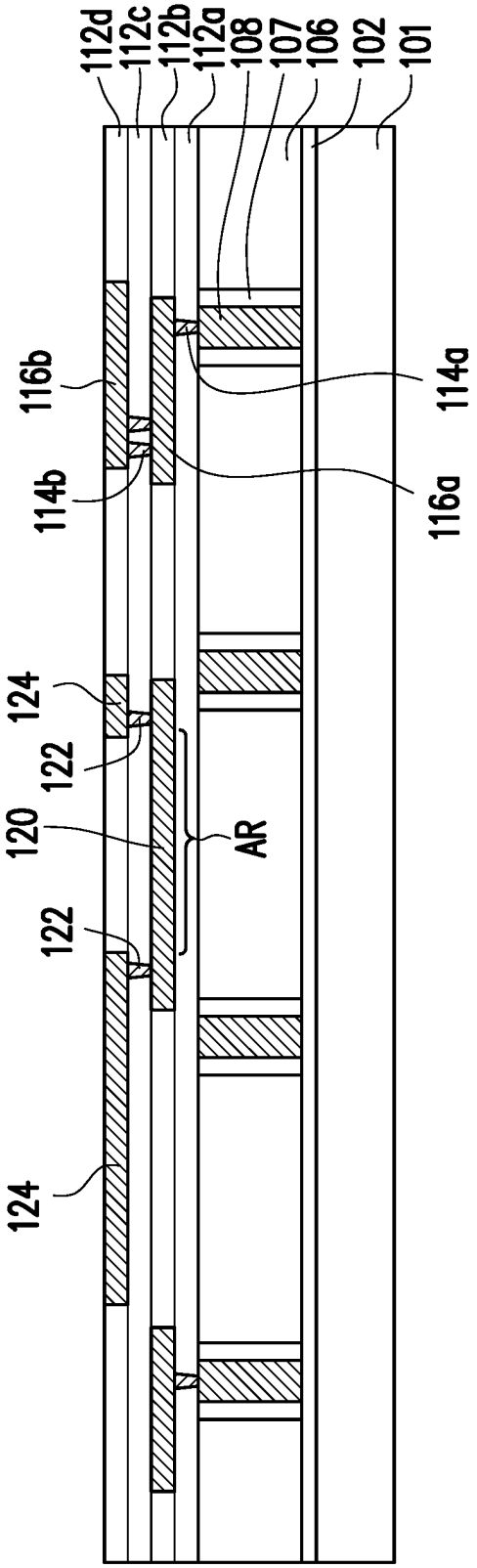
112d
112c
112b
112a
108
107
106
102
101
116b
114b
124
122
120
122
124
114a
116a
AR

FIG. 1C

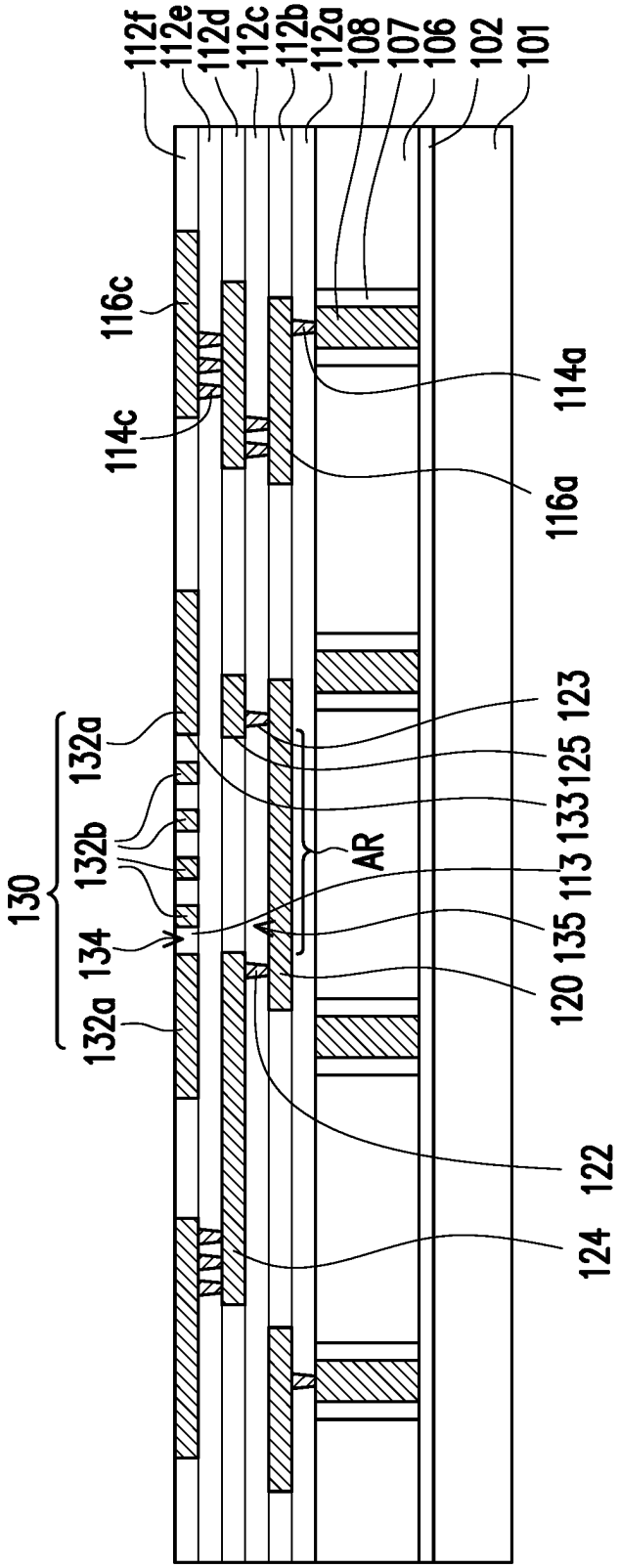
112f
112e
112d
112c
112b
112a
108
107
106
102
101
116c
114c
114a
116a
132a
132b
130
134
132a
123
125
133
113
AR
135
120
122
124

FIG. 1D

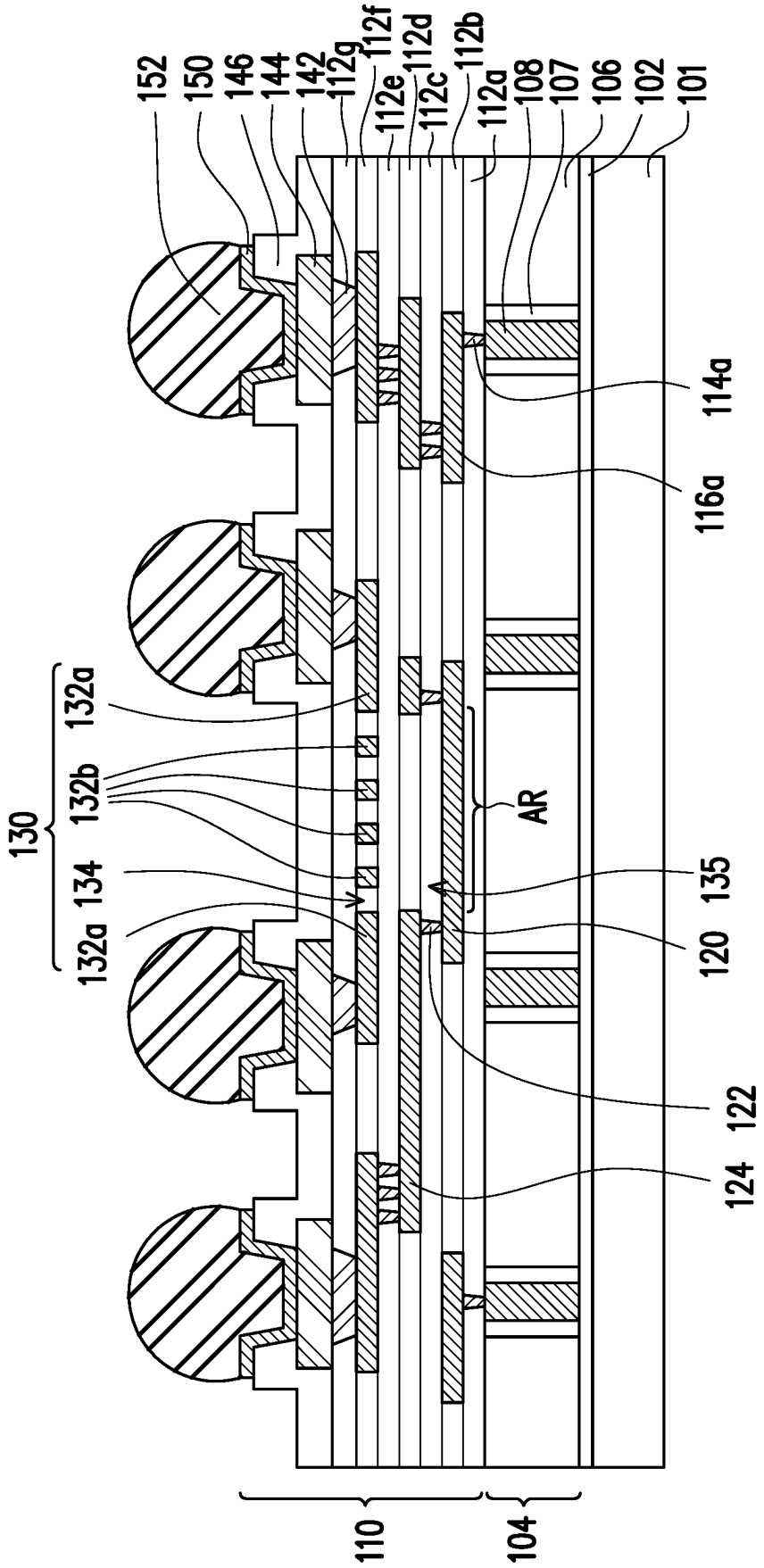
152
150
146
144
142
112g
112f
112e
112d
112c
112b
112a
108
107
106
102
101
114a
116a
132a
132b
130
134
132a
AR
135
120
122
124
110
104

FIG. 1E

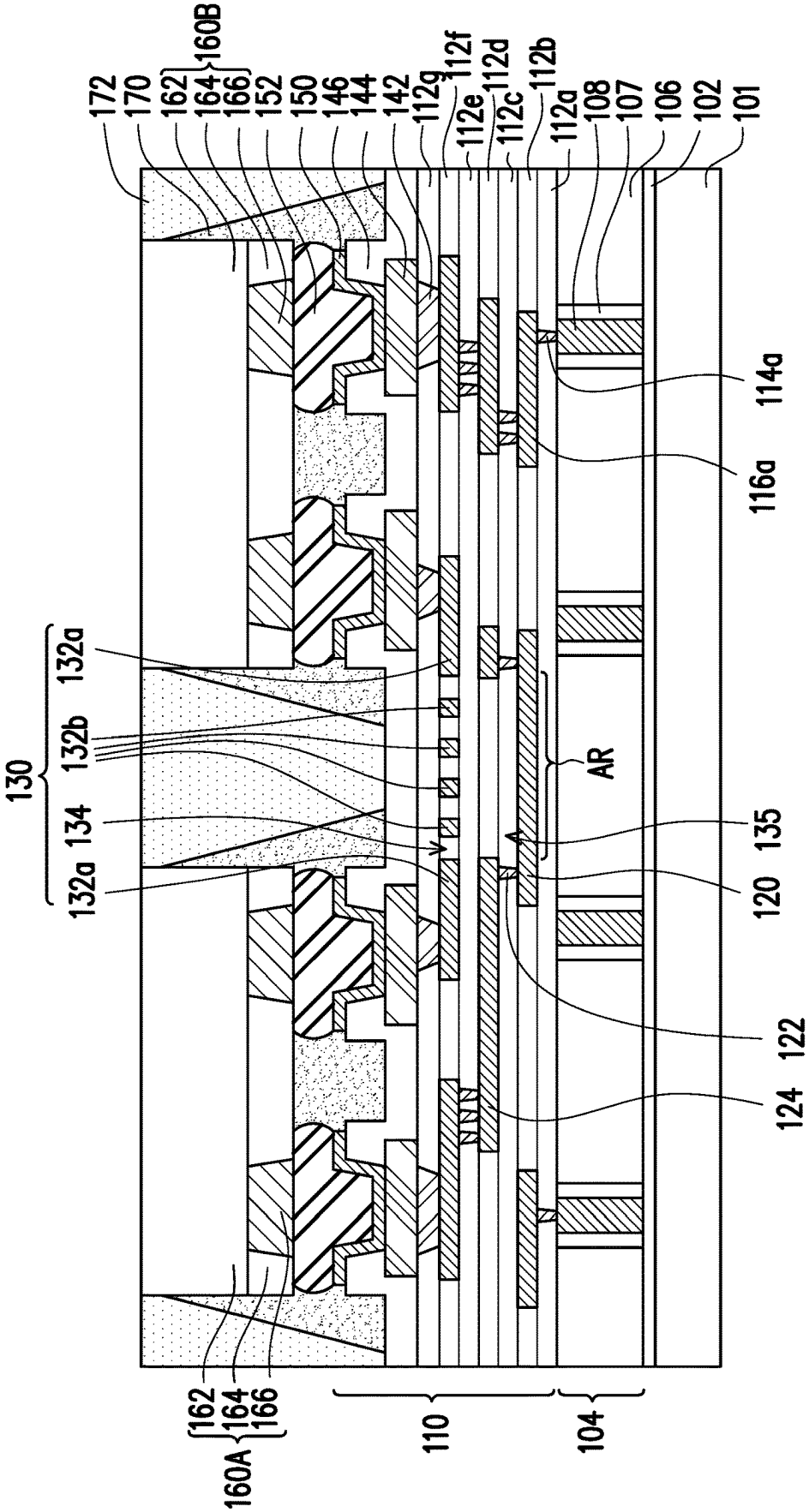
172
170
162
164
166
160B
152
150
146
144
142
112g
112f
112e
112d
112c
112b
112a
108
107
106
102
101
114a
116a
132a
132b
130
134
132a
AR
135
120
122
124
162
164
166
160A
110
104

FIG. 1F

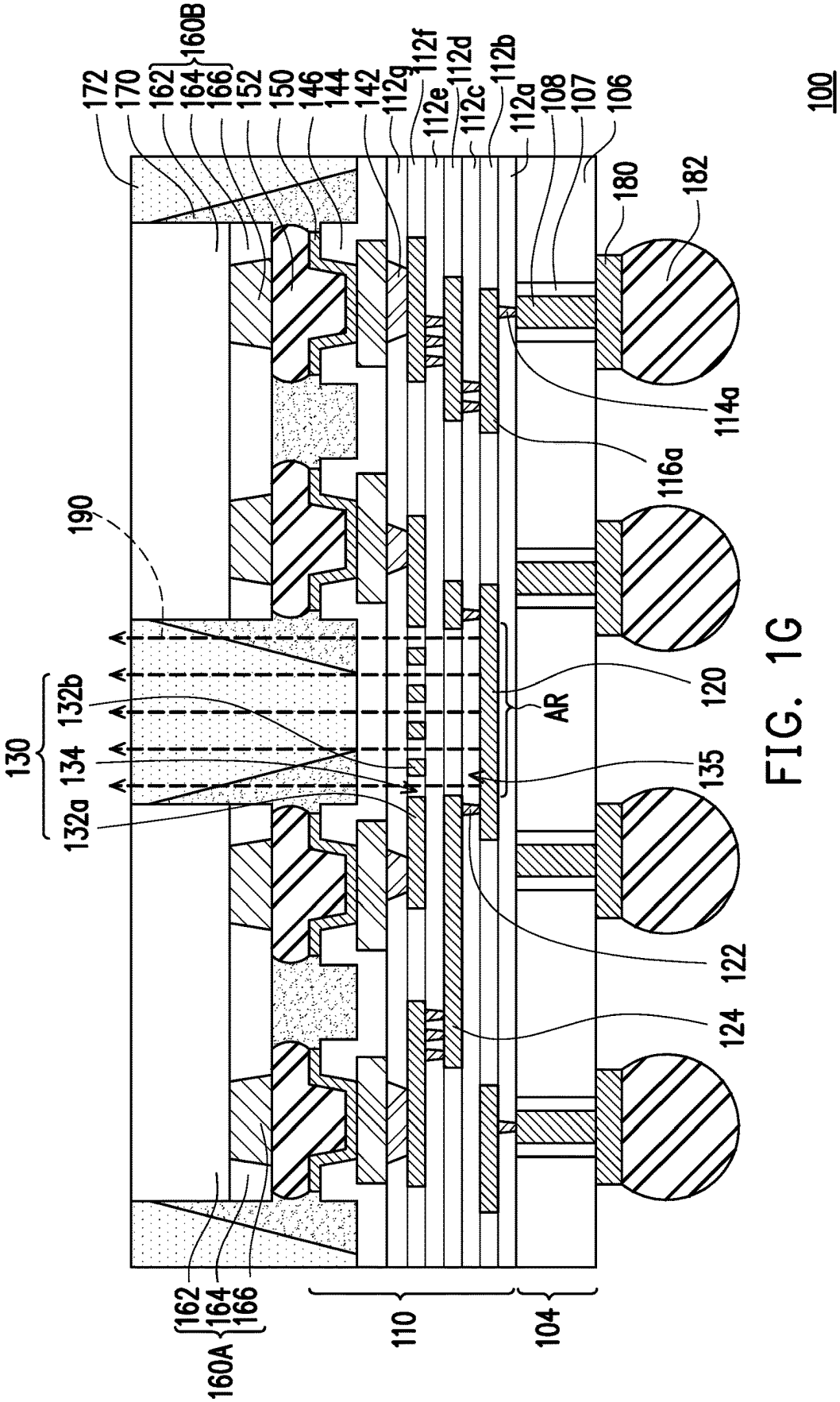
172
170
162
164
166
160B
152
150
146
144
142
112g
112f
112e
112d
112c
112b
112a
108
107
106
100
180
182
114a
116a
190
120
AR
135
122
124
130
132b
134
132a
162
164
166
160A
110
104

FIG. 1G

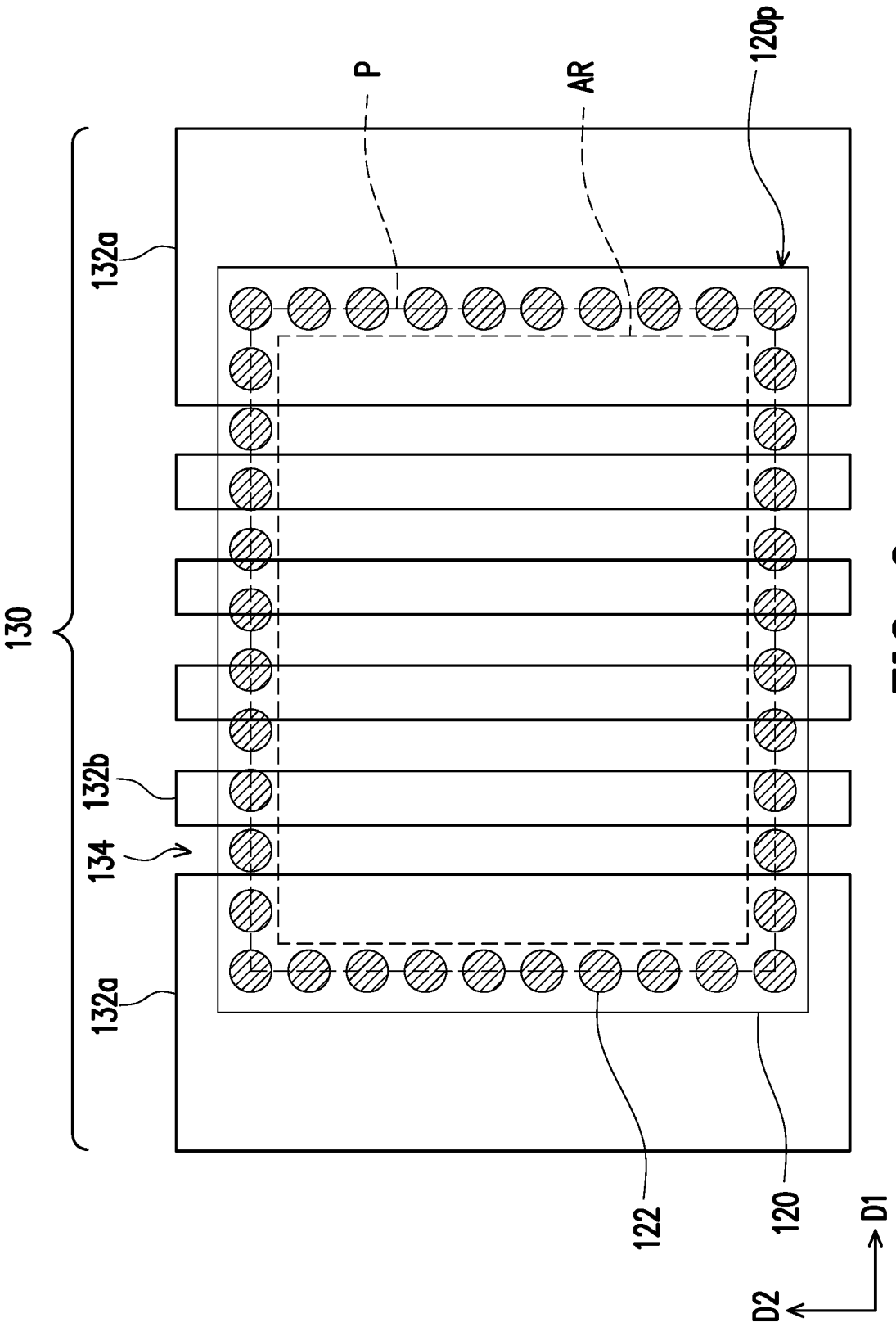

FIG. 2

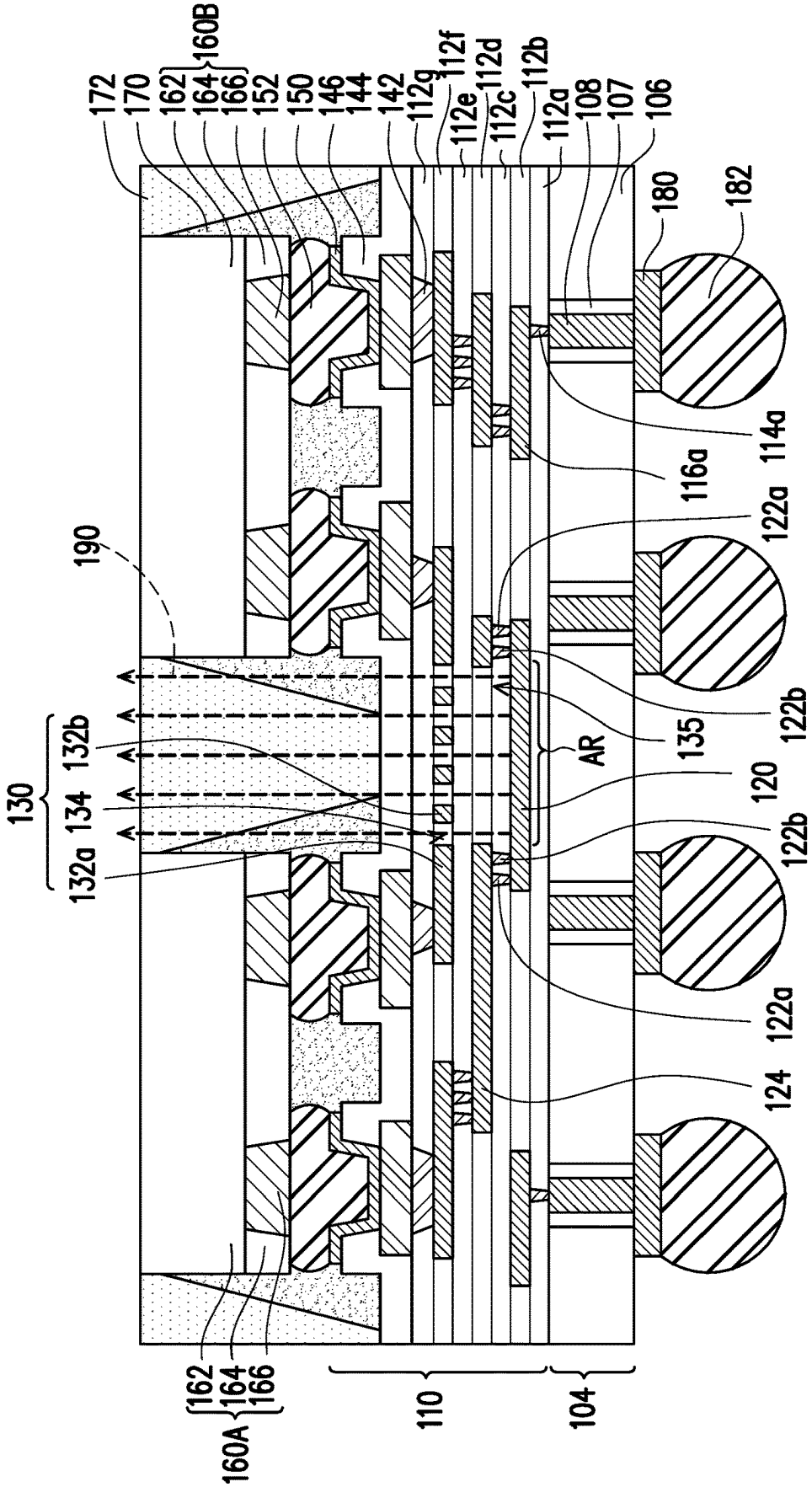
172
170
162
164
166
160B
152
150
146
144
142
112g
112f
112e
112d
112c
112b
112a
108
107
106
100
180
182
114a
116a
122a
122b
135
AR
120
122b
122a
124
190
130
132b
134
132a
A
162
164
166
160A
110
104

FIG. 3A

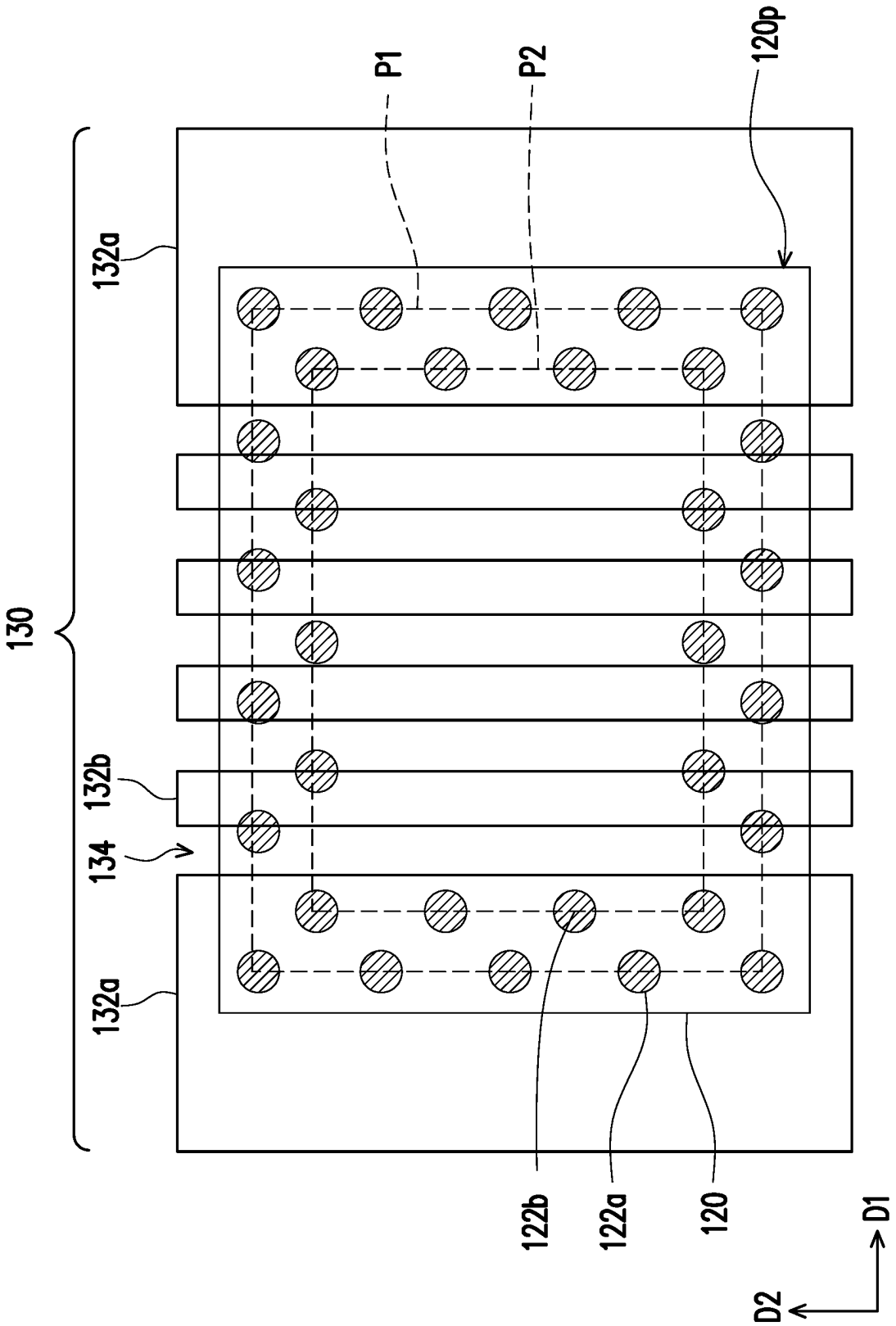

FIG. 3B

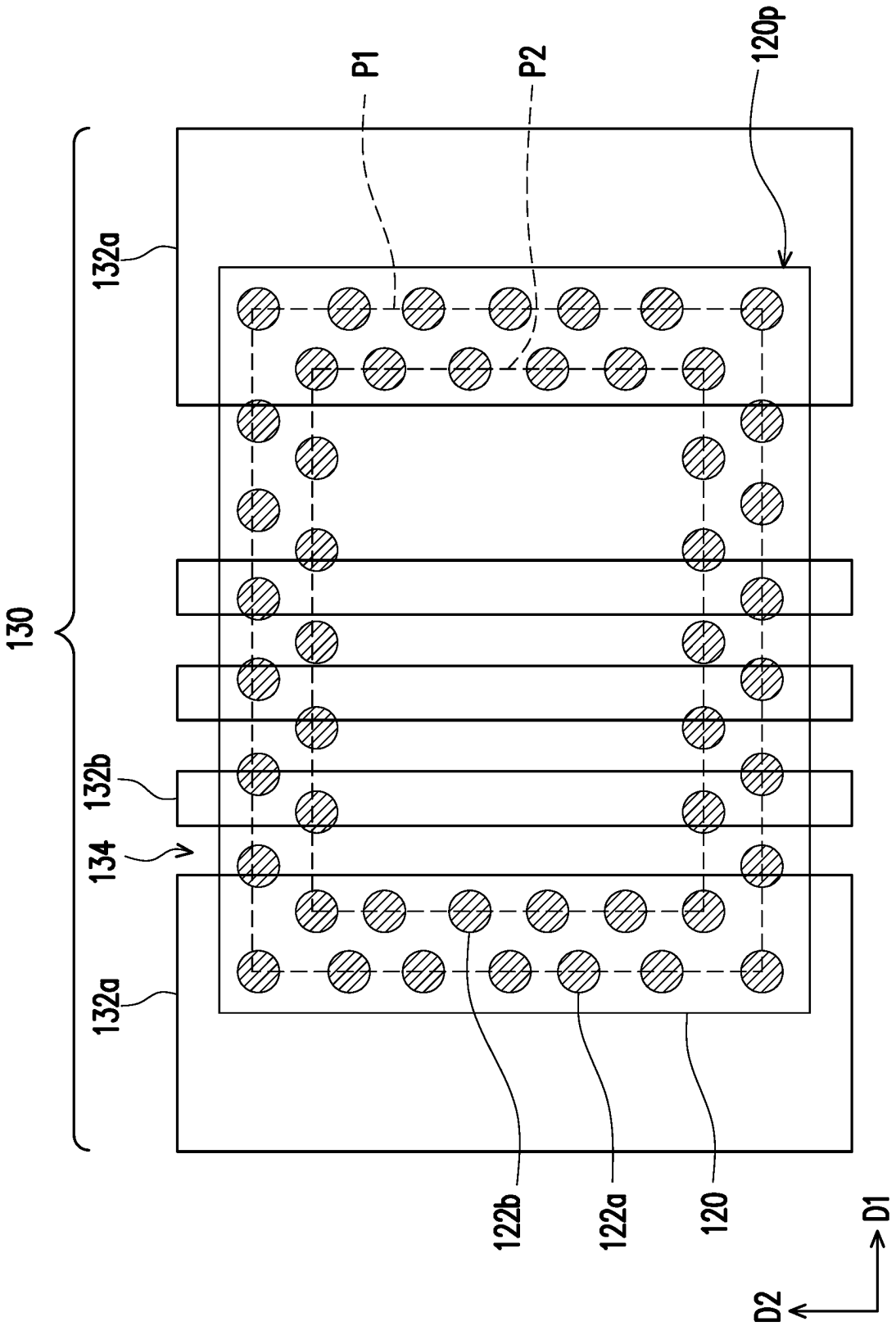

FIG. 4

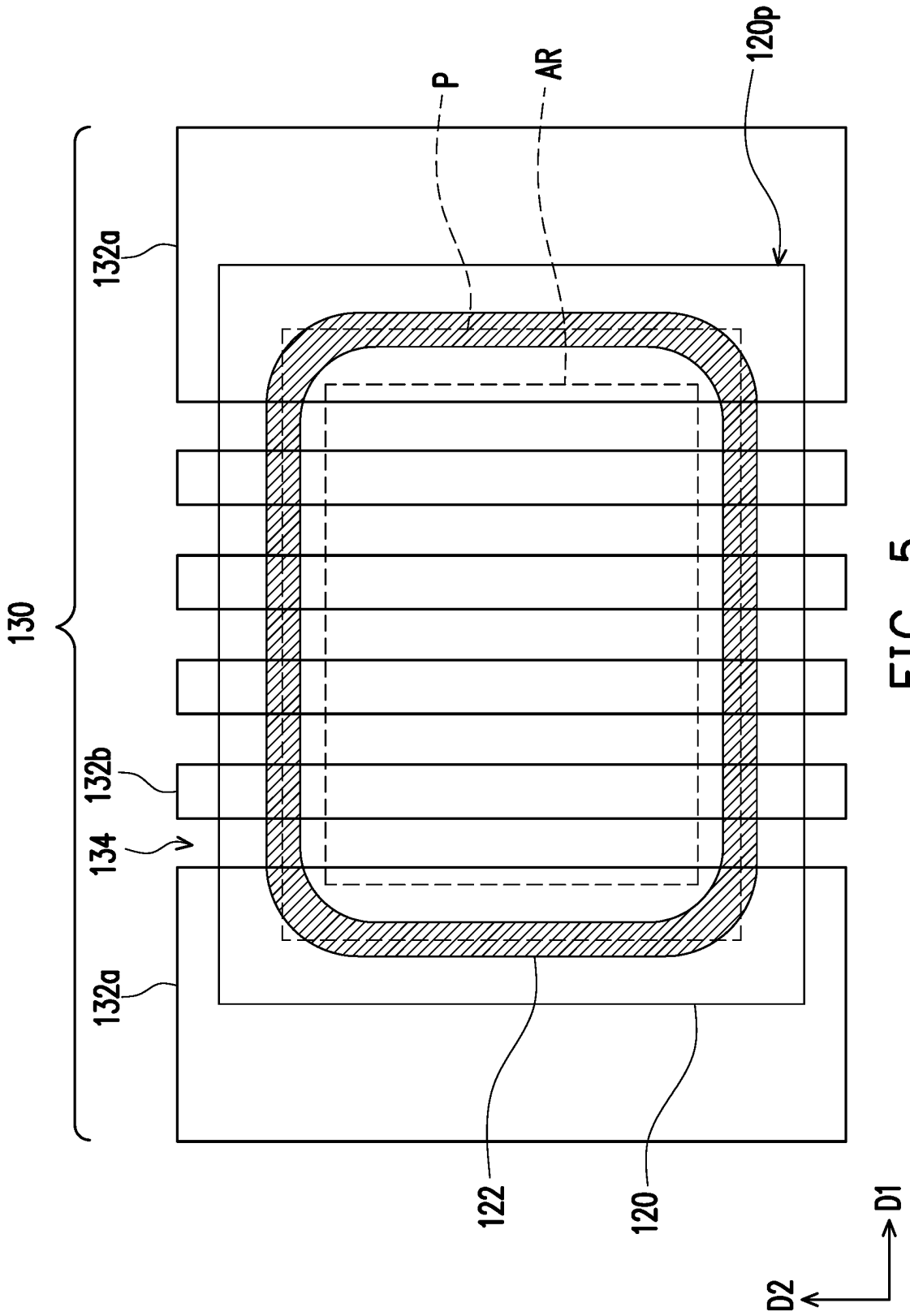

FIG. 5

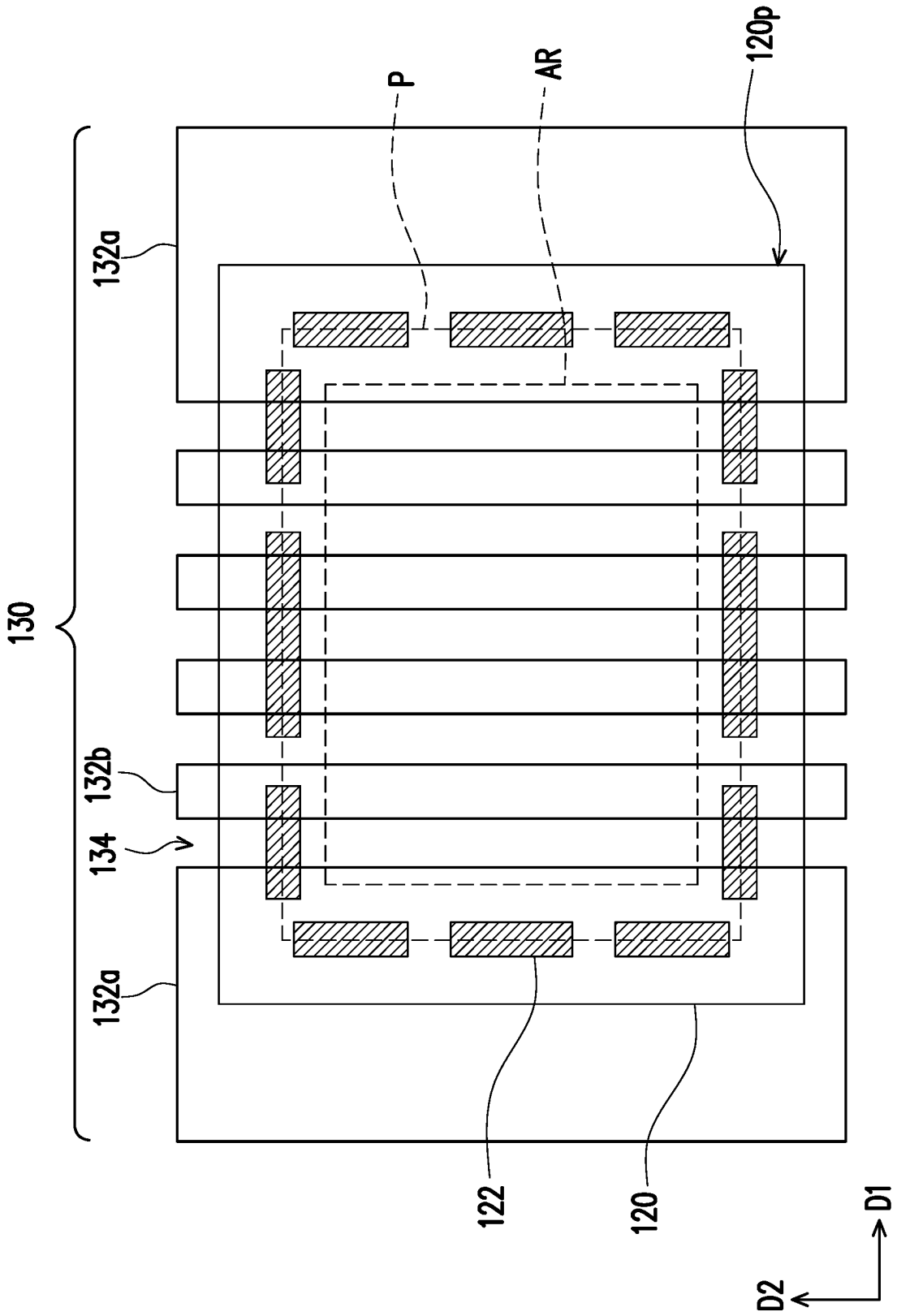

FIG. 6

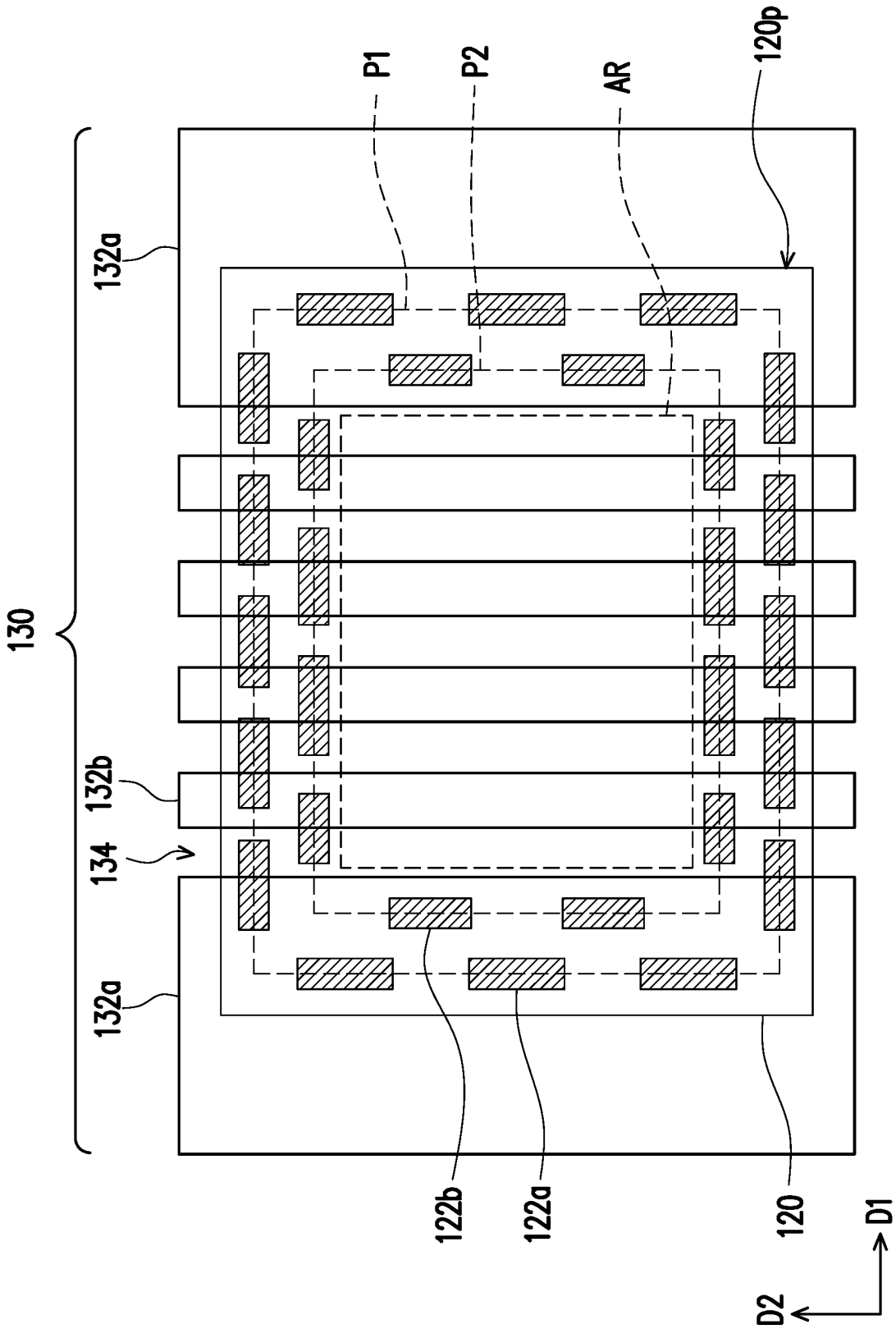

FIG. 7

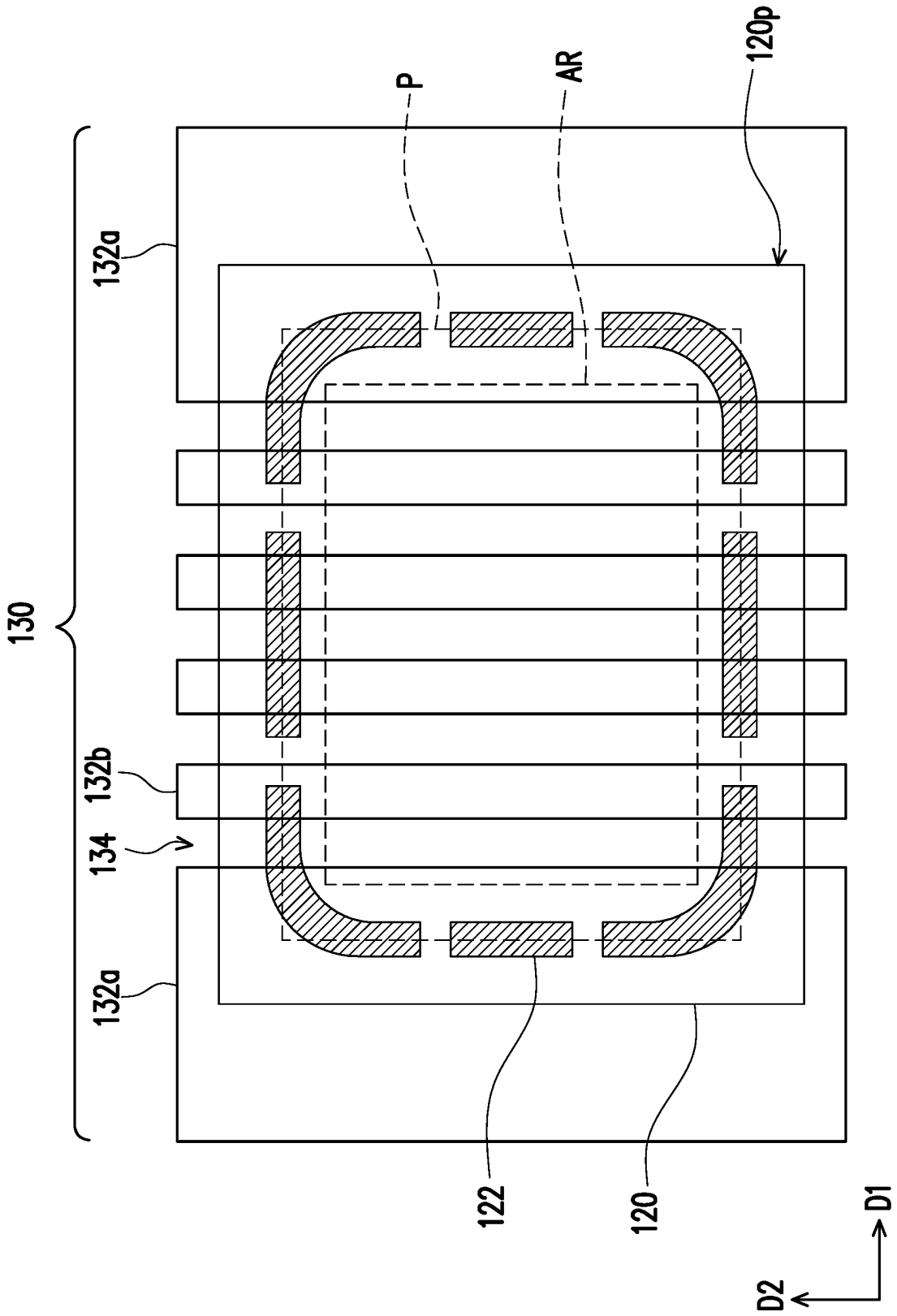

FIG. 8

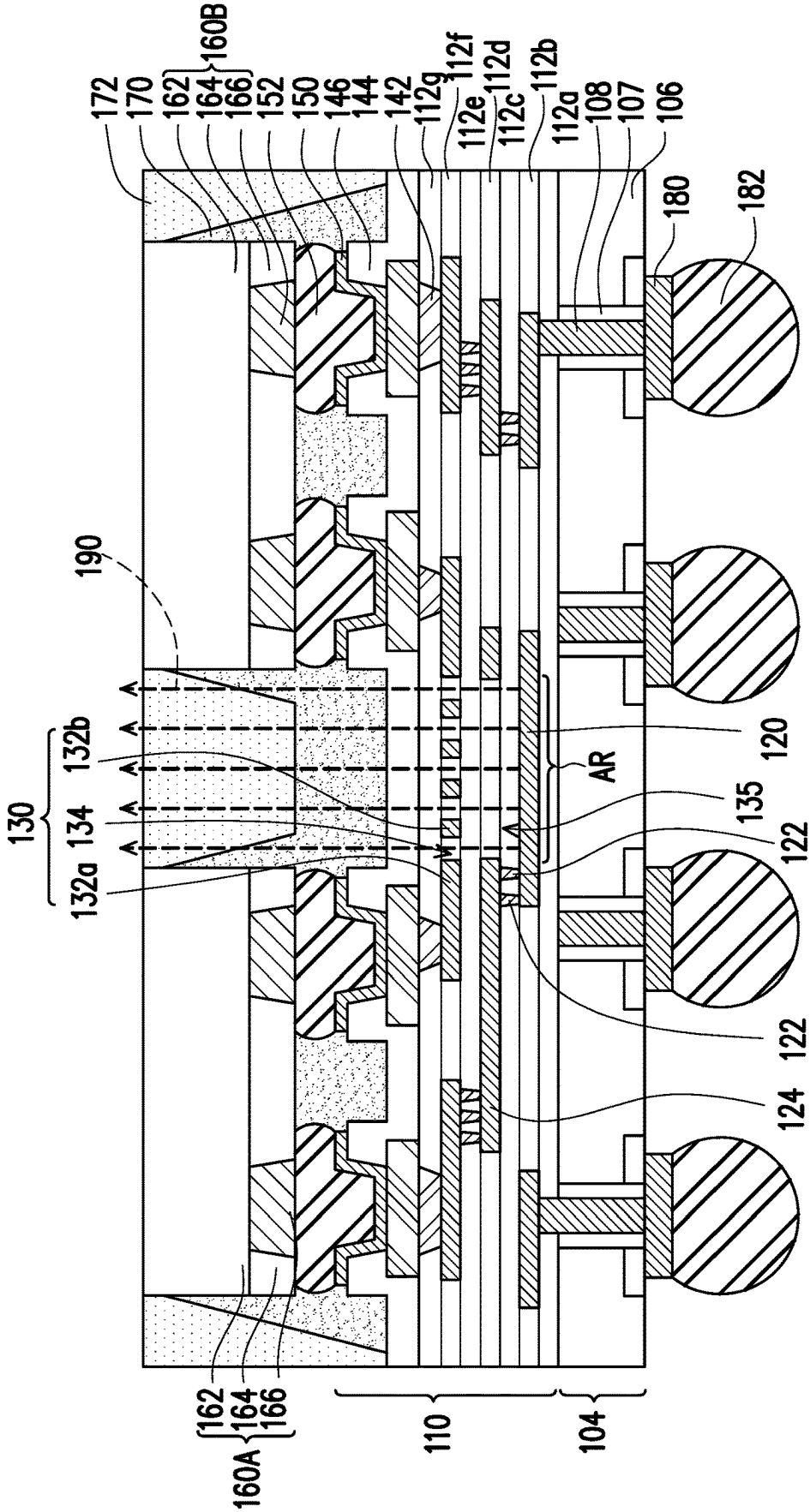
172
170
162
164
166
160B
152
150
146
144
142
112g
112f
112e
112d
112c
112b
112a
108
107
106
100
180
182
190
130
132b
134
132a
120
AR
135
122
122
124
162
164
166
160A
110
104

FIG. 9A

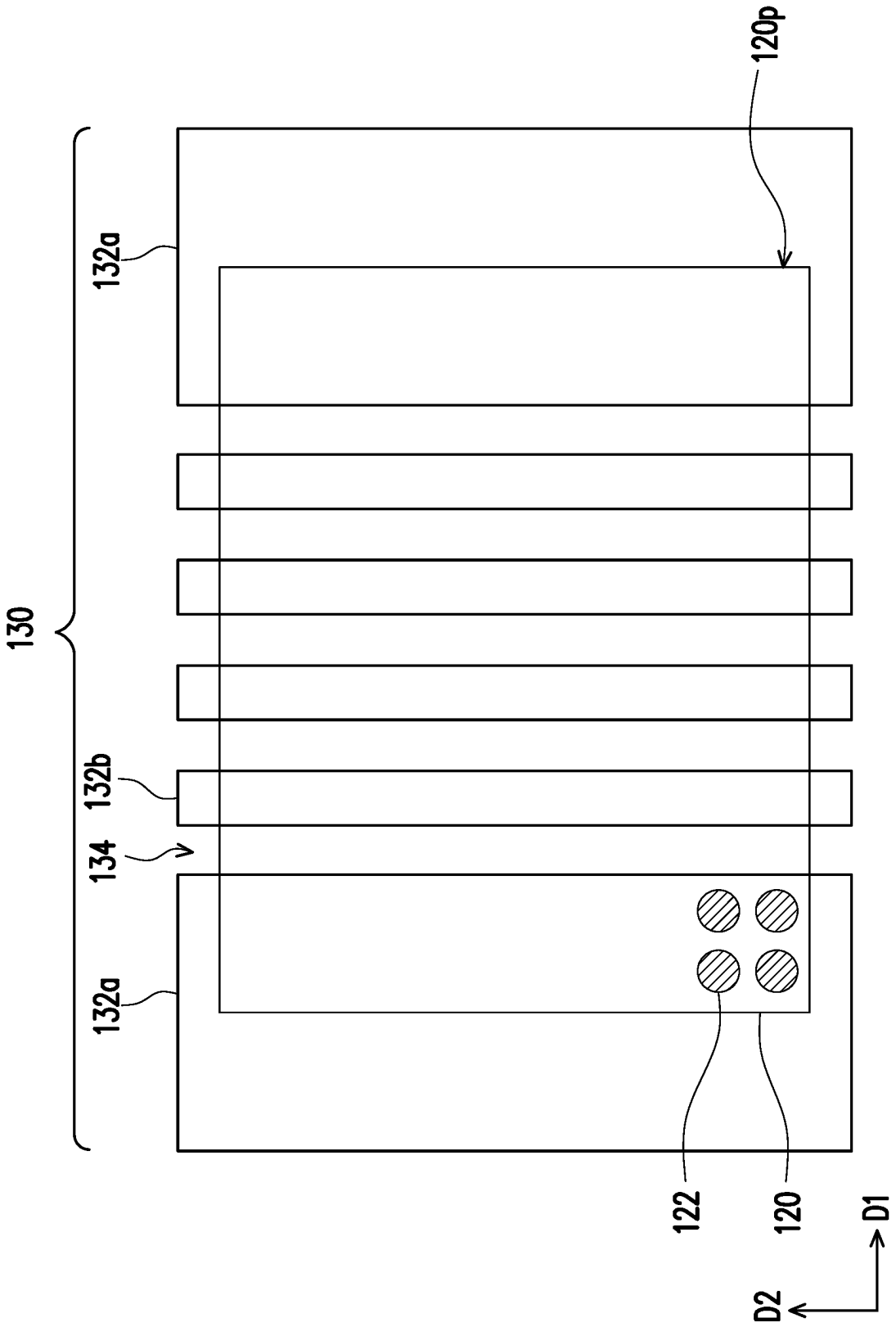

FIG. 9B

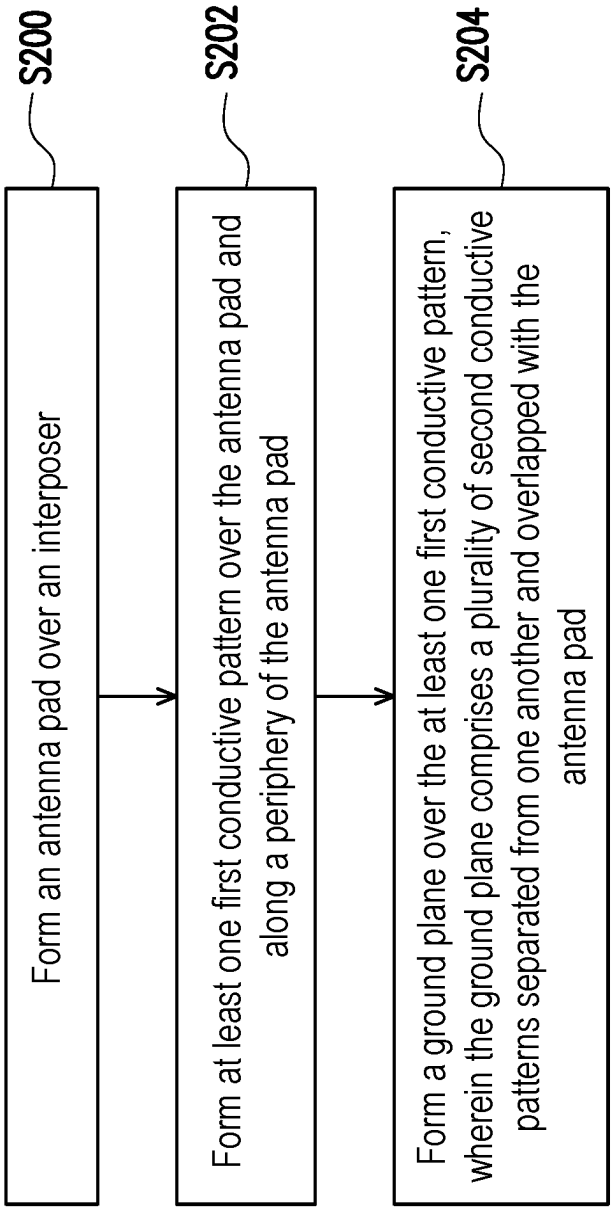
S200
Form an antenna pad over an interposer
S202
Form at least one first conductive pattern over the antenna pad and along a periphery of the antenna pad
S204
Form a ground plane over the at least one first conductive pattern, wherein the ground plane comprises a plurality of second conductive patterns separated from one another and overlapped with the antenna pad

FIG. 10

SEMICONDUCTOR STRUCTURES AND METHOD OF FORMING THE SAME

CROSS-REFERENCE TO RELATED APPLICATION

This application claims the priority benefit of U.S. provisional application Ser. No. 63/172,714, filed on Apr. 9, 2021. The entirety of the above-mentioned patent application is hereby incorporated by reference herein and made a part of this specification.

BACKGROUND

In modern semiconductor devices and systems, integration and miniaturization of components have progressed at an increasingly rapid pace. In wireless applications, one of the growing challenges encountered by the integration process is the disposition of radio frequency devices or antennas. Antennas associated with integrated circuits are usually designed with limited performance and capability due to the competing objective of size reduction. Thus, an improved integrated antenna structure is desired.

BRIEF DESCRIPTION OF THE DRAWINGS

Aspects of the present disclosure are best understood from the following detailed description when read with the accompanying figures. It is noted that, in accordance with the standard practice in the industry, various features are not drawn to scale. In fact, the dimensions of the various features may be arbitrarily increased or reduced for clarity of discussion.

FIG. **1**A to FIG. **1**G illustrate schematic cross-sectional views of a method of forming semiconductor structure in accordance with some embodiments of the disclosure.

FIG. **2** illustrates a schematic top view of a semiconductor structure of FIG. **1**G in accordance with some embodiments of the disclosure.

FIG. **3**A illustrates a schematic cross-sectional view of a semiconductor structure in accordance with some embodiments of the disclosure, and FIG. **3**B illustrates a schematic top view of a semiconductor structure of FIG. **3**A in accordance with some embodiments of the disclosure.

FIG. **4** illustrate schematic a top view of a semiconductor structure in accordance with some embodiments of the disclosure.

FIG. **5** illustrate schematic a top view of a semiconductor structure in accordance with some embodiments of the disclosure.

FIG. **6** illustrate schematic a top view of a semiconductor structure in accordance with some embodiments of the disclosure.

FIG. **7** illustrate schematic a top view of a semiconductor structure in accordance with some embodiments of the disclosure.

FIG. **8** illustrate schematic a top view of a semiconductor structure in accordance with some embodiments of the disclosure.

FIG. **9**A illustrates a schematic cross-sectional view of a semiconductor structure in accordance with some embodiments of the disclosure, and FIG. **9**B illustrates a schematic top view of a semiconductor structure of FIG. **9**A in accordance with some embodiments of the disclosure.

FIG. **10** illustrates a flow chart of a method of forming a semiconductor package in accordance with some embodiments of the disclosure.

DETAILED DESCRIPTION

The following disclosure provides many different embodiments, or examples, for implementing different features of the provided subject matter. Specific examples of components and arrangements are described below to simplify the present disclosure. These are, of course, merely examples and are not intended to be limiting. For example, the formation of a first feature over or on a second feature in the description that follows may include embodiments in which the first and second features are formed in direct contact, and may also include embodiments in which additional features may be formed between the first and second features, such that the first and second features may not be in direct contact. In addition, the present disclosure may repeat reference numerals and/or letters in the various examples. This repetition is for the purpose of simplicity and clarity and does not in itself dictate a relationship between the various embodiments and/or configurations discussed.

Further, spatially relative terms, such as "beneath," "below," "lower," "above," "upper" and the like, may be used herein for ease of description to describe one element or feature's relationship to another element(s) or feature(s) as illustrated in the figures. The spatially relative terms are intended to encompass different orientations of the device in use or operation in addition to the orientation depicted in the figures. The apparatus may be otherwise oriented (rotated 90 degrees or at other orientations) and the spatially relative descriptors used herein may likewise be interpreted accordingly.

Other features and processes may also be included. For example, testing structures may be included to aid in the verification testing of the 3D packaging or 3DIC devices. The testing structures may include, for example, test pads formed in a redistribution layer or on a substrate that allows the testing of the 3D packaging or 3DIC, the use of probes and/or probe cards, and the like. The verification testing may be performed on intermediate structures as well as the final structure. Additionally, the structures and methods disclosed herein may be used in conjunction with testing methodologies that incorporate intermediate verification of known good dies to increase the yield and decrease costs.

FIG. **1**A to FIG. **1**G illustrate schematic cross-sectional views of a method of forming semiconductor structure in accordance with some embodiments of the disclosure. It is understood that the disclosure is not limited by the method described below. Additional operations can be provided before, during, and/or after the method and some of the operations described below can be replaced or eliminated, for additional embodiments of the methods.

Although FIG. **1**A to FIG. **1**G are described in relation to a method, it is appreciated that the structures disclosed in FIG. **1**A to FIG. **1**G are not limited to such a method, but instead may stand alone as structures independent of the method.

Referring to FIG. **1**A, a carrier **101** is provided, and an interposer **104** is formed on the carrier **101**. The carrier **101** can be a blank glass carrier, a blank ceramic carrier, or the like. In some embodiments, a de-bonding layer **102** is formed between the interposer **104** and the carrier **101**. The de-bonding layer **102** may be formed of an adhesive such as a ultra-violet (UV) glue, Light-to-Heat Conversion (LTHC) glue, or the like, although other types of adhesives may be used. In alternative embodiments, a buffer layer is formed between the de-bonding layer and the carrier **101**. The buffer layer may include a dielectric material such as benzocy-

clobutene ("BCB"), polybenzoxazole ("PBO"), or any other suitable polymer-based dielectric material.

In some embodiments, the interposer **104** includes a substrate **106** and a plurality of through vias **108** in the substrate **106**. The substrate **106** may be a semiconductor substrate and may be made of a suitable elemental semiconductor, such as crystalline silicon, diamond, or germanium; a suitable compound semiconductor, such as gallium arsenide, silicon carbide, indium arsenide, or indium phosphide; or a suitable alloy semiconductor, such as silicon germanium carbide, gallium arsenic phosphide, or gallium indium phosphide. In some embodiments, the through vias **108** penetrate through the substrate **106**. For example, the through vias **108** extend from a first surface of the substrate **106** to a second surface opposite to the first surface of the substrate **106**. In some embodiments, the through vias **108** are made of a conductive material. For example, the material of the through vias **108** includes aluminum, titanium, copper, nickel, tungsten, and/or alloys thereof. In some embodiments, a liner **107** is further formed between the through vias **108** and the substrate **106**. In some embodiments, the liner **107** is made of a dielectric material such as silicon oxide. In some embodiments, the interposer **104** provides interconnection features for adjacent dies or devices. In that case, there may be no active or passive devices formed in the interposer **104**.

Referring to FIG. **1**B to FIG. **1**E, a redistribution layer (RDL) structure **110** is formed over and electrically connected to the interposer **104**, and an antenna cavity **135** is formed in the RDL structure **110**.

In some embodiments, as shown in FIG. **1**B, a plurality of conductive vias **114***a* are formed over the through vias **108** to electrically connect the through vias **108**. In some embodiments, a dielectric layer **112***a* is formed on the top surface of the interposer **104**, and the conductive vias **114***a* are formed in the dielectric layer **112***a*. In some embodiments, the dielectric layer **112***a* includes silicon oxide, silicon nitride or a silicon oxynitride. In alternative embodiments, the dielectric layer **112***a* includes a low-k dielectric material having a dielectric constant (k) less than 4. The low-k dielectric material has a dielectric constant from about 1.2 to about 3.5. In alternative embodiments, the dielectric layer **112***a* includes TEOS formed oxide, undoped silicate glass, or doped silicate glass such as BPSG, FSG, PSG, BSG, and/or other suitable dielectric materials. In some embodiments, the dielectric layer **112***a* is deposited by CVD, PECVD, PVD, spin coating, the like, or a combination thereof. Then, the dielectric layer **112***a* is patterned to form a plurality of openings. For example, the dielectric layer **112***a* is patterned utilizing a combination of photolithography and etching techniques to form openings corresponding to the desired pattern of the conductive vias **114***a*. After that, the openings are filled with a conductive material to form the conductive vias **114***a*. In some embodiments, a seed layer is deposited on surfaces of the openings, and then a conductive material fills the openings by electroplating. Suitable materials for the seed layer include copper, copper alloy, or the like, and suitable materials for the conductive material include copper, silver, gold, tungsten, aluminum, combinations thereof, or the like. A chemical mechanical planarization (CMP) process or the like may be used to remove excess seed layer and/or conductive material from a surface of the dielectric layer **112***a* and to planarize surfaces of the dielectric layer **112***a* and the conductive vias **114***a* for subsequent processing.

Then, an antenna pad **120** is formed over the interposer **104**. In some embodiments, the antenna pad **120** is formed in a dielectric layer **112***b* over the dielectric layer **112***a*. The antenna pad **120** may be electrically isolated from the interposer **104** through the dielectric layer **112***a*. The material and forming method of the dielectric layer **112***b* may be similar to or the same as those described above with respect to the dielectric layer **112***a*. For example, the dielectric layer **112***b* includes silicon oxide.

In some embodiments, a plurality of conductive lines **116***a* are formed in the dielectric layer **112***a* aside the antenna pad **120**. The conductive lines **116***a* are electrically connected to the through vias **108** by the conductive vias **114***a* therebetween. The conductive lines **116***a* may be also referred to as a first-level conductive line of the RDL structure **110**. In some embodiments, the antenna pad **120** is disposed adjacent to the conductive lines **116***a* and embedded in the first-level conductive lines of the RDL structure **110**. The antenna pad **120** may be simultaneously formed with the first-level conductive line of the RDL structure **110** by the same process. For example, the dielectric layer **112***b* is patterned utilizing a combination of photolithography and etching techniques to form trenches corresponding to the desired pattern of the antenna pad **120** and the conductive lines **116***a*. After that, the trenches are filled with a conductive material to form the antenna pad **120** and the conductive lines **116***a*. In some embodiments, a seed layer is deposited on surfaces of the trenches, and then a conductive material fills the trenches by electroplating. Suitable materials for the seed layer include copper, copper alloy, or the like, and suitable materials for the conductive material include copper, silver, gold, tungsten, aluminum, combinations thereof, or the like. A chemical mechanical planarization (CMP) process or the like may be used to remove excess seed layer and/or conductive material from a surface of the dielectric layer **112***b* and to planarize surfaces of the dielectric layer **112***b*, the antenna pad **120** and the conductive lines **116***a* for subsequent processing. In some embodiments, top and bottom surfaces of the antenna pad **120** are substantially coplanar with top and bottom surfaces of the conductive lines **116***a* respectively. The material of the antenna pad **120** is substantially the same as the material of the conductive lines **116***a*, for example. In alternative embodiments, the antenna pad **120** and the conductive lines **116***a* are formed separately. In such embodiments, the material of the antenna pad **120** is substantially the same as or different from the material of the conductive lines **116***a*. In some embodiments, one antenna pad **120** is illustrated for clarify, however, there may be a plurality of antenna pads. In some embodiments, the conductive vias **114***a* and the conductive lines **116***a* are separately formed and disposed in different dielectric layers respectively. However, the disclosure is not limited thereto. The conductive vias **114***a* and the conductive lines **116***a* may be formed simultaneously by a dual-damascene process, and the conductive vias **114***a* and the conductive lines **116***a* may be formed in the same dielectric layer. In such embodiments, one of the dielectric layers **112***a* and **112***b* is omitted.

As shown in FIG. **2**, from a top view, the antenna pad **120** may be rectangular shaped. The antenna pad **120** has a first dimension (e.g., length) in a first direction D**1** and a second dimension (e.g., width) in a second direction D**2** perpendicular to the first direction D**1**. In some embodiments, the first direction D**1** and the second direction D**2** are both perpendicular to a stacking direction of the interposer **104** and the antenna pad **120**. The first dimension and/or the second dimension of the antenna pad **120** may range from 0.4 mm to about 4.5 mm. The interposer **104** has a first dimension (e.g., length) in the first direction D**1** and a second dimension (e.g., width) in the second direction D**2**.

The first dimension and/or the second dimension of the interposer **104** may range from about 0.5 mm to about 10 mm.

Referring to FIG. **1**C, a plurality of conductive patterns **122** is formed over the antenna pad **120**, and a plurality of conductive vias **114***b* are formed over the conductive lines **116***a*. In some embodiments, the conductive patterns **122** and the conductive vias **114***b* are formed in a dielectric layer **112***c* over the dielectric layer **112***b*. The material and forming method of the dielectric layer **112***c* may be similar to or the same as those described above with respect to the dielectric layer **112***a*. For example, the dielectric layer **112***c* includes silicon oxide.

In some embodiments, the conductive patterns **122** are conductive vias. The conductive patterns **122** may be directly formed on the antenna pad **120**. For example, the conductive patterns **122** are in direct contact with the antenna pad **120** and electrically connected to the antenna pad **120**. In some embodiments, as shown in FIG. **2**, the conductive patterns **122** are disposed along a periphery **120***p* of the antenna pad **120** to surround an area AR of the antenna pad **120**. For example, the conductive patterns **122** are arranged along a ring-shaped path P surrounding the area AR. In some embodiments, the conductive patterns **122** are arranged regularly, that is, a distance between the adjacent conductive patterns **122** is constant. In alternative embodiments, the conductive patterns **122** are arranged irregularly or randomly, that is, a distance between the conductive patterns **122** is not constant. In some embodiments, the ring-shaped path P is rectangular, for example. However, the ring-shaped path P may be designed as other suitable ring shape such as circle, square or polygon depending on the shape of the semiconductor die and/or requirements. In some embodiments, the conductive patterns **122** are substantially of the same diameter. However, the disclosure is not limited thereto. In alternative embodiments, the conductive patterns **122** have different diameter. In some embodiments, the diameter of the conductive patterns **122** ranges from about 0.1 μm to about 100 μm. In some embodiments, the diameter of the conductive patterns **122** are substantially the same as or different from the diameter of the conductive vias **114***b*.

In some embodiments, the conductive patterns **122** include a conductive material such as copper, silver, gold, tungsten, aluminum, combinations thereof, or the like. In an embodiment, the conductive patterns **122** further include a seed layer of copper or copper alloy. In some embodiments, the conductive vias **114***b* are electrically connected to the conductive lines **116***a*. For example, the conductive vias **114***b* are in direct contact with the conductive lines **116***a* therebeneath. The conductive vias **114***b* may have the same material as the conductive patterns **122** and may be formed simultaneously with the conductive patterns **122**. For example, the dielectric layer **112***c* is patterned utilizing a combination of photolithography and etching techniques to form openings corresponding to the desired pattern of the conductive patterns **122** and the conductive vias **114***b*. After that, the openings are filled with a conductive material to form the conductive patterns **122** and the conductive vias **114***b*. In some embodiments, a seed layer is deposited on surfaces of the openings, and then a conductive material fills the openings by electroplating. A chemical mechanical planarization (CMP) process or the like may be used to remove excess seed layer and/or conductive material from a surface of the dielectric layer **112***c* and to planarize surfaces of the dielectric layer **112***c*, the conductive patterns **122** and the conductive vias **114***b* for subsequent processing. In some embodiments, the antenna pad **120** and the conductive patterns **122** are disposed in different dielectric layers **112***b* and **112***c*. Similarly, the conductive vias **114***b* and the conductive lines **116***a* are disposed in different dielectric layers **112***b* and **112***c*. However, the disclosure is not limited thereto. In alternative embodiments, the antenna pad **120** and the conductive patterns **122** thereover and the conductive lines **116***a* and the conductive vias **114***b* thereover are disposed in the same dielectric layer. For example, the antenna pad **120** and the conductive lines **116***a* are formed by forming a conductive layer over the dielectric layer **112***b* and patterning the conductive layer. In such embodiments, a dielectric layer is then formed to cover the top surfaces of the antenna pad **120** and the conductive lines **116***a*. After that, the conductive patterns **122** and the conductive vias **114***b* are formed in the dielectric layer by patterning the dielectric layer to form a plurality of openings exposing the antenna pad **120** and the conductive lines **116***a* and filling a conductive material in the openings, for example. In such embodiments, one of the dielectric layers **112***b* and **112***c* is omitted.

Then, a plurality of conductive patterns **124** are formed over the conductive patterns **122**, and a plurality of conductive lines **116***b* are formed over the conductive vias **114***b*, for example. In some embodiments, the conductive patterns **124** and the conductive lines **116***b* are formed in a dielectric layer **112***d* over the dielectric layer **112***c*. The material and forming method of the dielectric layer **112***d* may be similar to or the same as those described above with respect to the dielectric layer **112***a*. For example, the dielectric layer **112***d* includes silicon oxide.

The conductive patterns **124** are electrically connected to the conductive patterns **122**. The conductive patterns **124** may be disposed at different sides (e.g., first to fourth) of the antenna pad **120**, to cover and electrically connect the conductive patterns **122** at the respective side of the antenna pad **120**. For example, the conductive pattern **124** disposed at the first side of the antenna pad **120** covers and electrically connects the conductive patterns **122** at the first side of the antenna pad **120**, and the conductive pattern **124** disposed at the second side of the antenna pad **120** covers and electrically connects the conductive patterns **122** at the second side of the antenna pad **120**. The conductive pattern **124** may be a plate, a strip or any other suitable shape. However, the disclosure is not limited thereto. In alternative embodiments, more than one conductive pattern **124** electrically connects the conductive patterns **122** disposed at the same side of the antenna pad **120**. In alternative embodiments, one conductive pattern **124** electrically connects the conductive patterns **122** disposed at different sides of the antenna pad **120**.

In some embodiments, the conductive lines **116***b* are electrically connected to the conductive lines **116***a* by the conductive vias **114***b* therebetween. The conductive lines **116***b* may be also referred to as a second-level conductive line of the RDL structure **110**. In some embodiments, the conductive patterns **124** are disposed adjacent to the conductive lines **116***b* and embedded in the second-level conductive lines of the RDL structure **110**. The conductive patterns **124** may be simultaneously formed with the second-level conductive line of the RDL structure **110** by the same process. For example, the dielectric layer **112***d* is patterned utilizing a combination of photolithography and etching techniques to form openings corresponding to the desired pattern of the conductive patterns **124** and the conductive lines **116***b*. After that, the openings are filled with a conductive material to form the conductive patterns **124** and the conductive lines **116***b*. In some embodiments, a seed layer is

deposited on surfaces of the openings, and then a conductive material fills the openings by electroplating. Suitable materials for the seed layer include copper, copper alloy, or the like, and suitable materials for the conductive material include copper, silver, gold, tungsten, aluminum, combinations thereof, or the like. A chemical mechanical planarization (CMP) process or the like may be used to remove excess seed layer and/or conductive material from a surface of the dielectric layer **112***d* and to planarize surfaces of the dielectric layer **112***d*, the conductive patterns **124** and the conductive lines **116***b* for subsequent processing. In some embodiments, the material of the conductive patterns **124** is substantially the same as the conductive lines **116***b*. Top and bottom surfaces of the conductive patterns **124** may be substantially coplanar with top and bottom surfaces of the conductive lines **116***b* respectively. In alternative embodiments, the conductive patterns **124** and the conductive lines **116***b* are formed separately. In such embodiments, the material of the antenna pad **120** is substantially the same as or different from the material of the conductive lines **116***a*. In some embodiments, the conductive vias **114***b* and the conductive lines **116***b* are separately formed and disposed in different dielectric layers respectively. However, the disclosure is not limited thereto. The conductive vias **114***b* and the conductive lines **116***b* may be formed simultaneously by a dual-damascene process, and the conductive vias **114***b* and the conductive lines **116***b* may be formed in the same dielectric layer. In such embodiments, one of the dielectric layers **112***c* and **112***d* is omitted.

Referring to FIG. **1**D, a ground plane **130** is formed over the antenna pad **120**, and a plurality of conductive lines **116***c* are formed over the conductive lines **116***b*. In some embodiments, before forming the ground plane **130** and conductive lines **116***c*, a plurality of conductive vias **114***c* in a dielectric layer **112***e* are formed between the conductive lines **116***b* and the conductive lines **116***c*, so as to electrically connect the conductive lines **116***b* and the conductive lines **116***c*. In some embodiments, the ground plane **130** and the conductive lines **116***c* are formed in a dielectric layer **112***f* over the dielectric layer **112***e*. The material and forming method of the dielectric layers **112***e* and **112***f* may be similar to or the same as those described above with respect to the dielectric layer **112***a*. For example, the dielectric layers **112***e* and **112***f* includes silicon oxide.

The ground plane **130** includes a plurality of conductive patterns **132***a*, **132***b* over the antenna pad **120**. The conductive patterns **132***b* (i.e., inner conductive patterns) are disposed between the conductive patterns **132***a* (i.e., outer conductive patterns). In some embodiments, the conductive patterns **132***a*, **132***b* are separated from one another, and a plurality of slits **134** are formed between the adjacent conductive patterns **132***a*, **132***b*. The slits **134** may be also referred to as space or spacing. The conductive patterns **132***a*, **132***b* are grounded, for example. In some embodiments, the ground plane **130** is also referred to as a grated grounding element. The ground plane **130** is electrically isolated from the conductive patterns **122**, the conductive patterns **124** and the conductive lines **116***c*, for example. In some embodiments, the conductive patterns **132***a*, **132***b* are respectively extended along a direction (e.g., the second direction D**2**), and the conductive patterns **132***a*, **132***b* are arranged along a direction substantially perpendicular to the direction (e.g., the first direction D**1**). The conductive patterns **132***a*, **132***b* may be substantially parallel to each other, for example. In some embodiments, the silts **134** are filled with the dielectric layer **112***f*. For example, the dielectric layer **112***f* includes a plurality of dielectric patterns **113** filling the silts **134** respectively. In some embodiments, a dimension in the first direction D**1** (e.g., a width) of the slits **134** is constant. The dimension in the first direction D**1** of the slits **134** ranges from about 0.1 μm to about 1000 μm, for example. However, the disclosure is not limited thereto. The slits **134** may have different width. In alternative embodiments, the conductive patterns **132***a*, **132***b* are physically connected at their ends. For example, the ground plane **130** further includes a connection pattern (not shown), and the connecting pattern physically connects ends of the conductive patterns **132***a*, **132***b*. An extending direction of the connecting pattern may be substantially perpendicular to an extending direction of the conductive patterns **132***a*, **132***b*. In such embodiments, the ground plane **130** is comb-shaped.

In some embodiments, the ground plane **130** including the conductive patterns **132***a*, **132***b* and the slits **134** at least covers the area AR of the antenna pad **120** surrounded by the conductive patterns **122**. For example, as shown in FIG. **1**D and FIG. **2**, a projection of the ground plane **130** including the conductive patterns **132***a*, **132***b* and the slits **134** onto the top surface of the interposer **104** is larger than and overlapped with a projection of the area AR of the antenna pad **120** onto the top surface of the interposer **104**. In some embodiments, the ground plane **130** including the conductive patterns **132***a*, **132***b* and the slits **134** fully covers the antenna pad **120** therebelow. Each of the conductive patterns **132***a*, **132***b* and the slits **134** is overlapped with the antenna pad **120**, for example.

In some embodiments, as shown in FIG. **1**D, in a stacking direction of the antenna pad **120**, the conductive patterns **122**, the conductive patterns **124** and the ground plane **130**, the slits **134** are not overlapped with any conductive element between the ground plane **130** and the antenna pad **120**. For example, as shown in FIG. **1**D and FIG. **2**, a projection of the silts **134** onto the antenna pad **120** is not overlapped with a projection of the conductive patterns **124** onto the antenna pad **120**. Similarly, a projection of the silts **134** onto the antenna pad **120** is not overlapped with a projection of the conductive patterns **122** onto the antenna pad **120**. In some embodiments, the conductive patterns **124** and the conductive patterns **122** are substantially not overlapped with the area AR of the antenna pad **120**. In some embodiments, as shown in FIG. **1**D, an inner sidewall **125** of the conductive pattern **124** is substantially flush with an inner sidewall **133** of the outermost conductive pattern **132***a*. However, the disclosure is not limited thereto. In alternative embodiments, the inner sidewall **125** of the conductive pattern **124** is disposed between the inner sidewall **133** of the outermost conductive pattern **132***a* and an inner sidewall of the conductive patterns **122**. In some embodiments, an antenna cavity **135** is formed between the antenna pad **120**, the ground plane **130** and the inner sidewalls **123**, **125** of the conductive patterns **122**, **124**. For example, the antenna cavity **135** is formed between the area AR of the antenna pad **120**, the ground plane **130** and the inner sidewalls **123**, **125** of the conductive patterns **122**, **124**. In some embodiments, the inner sidewalls **123**, **125** of the conductive patterns **122**, **124** cooperatively form a surrounding sidewall for the antenna cavity **135**. The surrounding sidewall of the antenna cavity **135** may be discrete or continuous. The antenna cavity **135** is a resonant cavity that allows for electromagnetic waves to radiate to or from the antenna pad **120**. In some embodiments, the antenna cavity **135** is also referred to as an oscillation cavity. The antenna cavity **135** may be filled with a dielectric material. In some embodiments, the antenna cavity **135** is filled with a dielectric material of at least one dielectric layer of the RDL structure **110**. For

example, the antenna cavity **135** is filled with the dielectric materials of the dielectric layers **112***c*, **112***d* and **112***e* of the RDL structure **110**. In some embodiments, the dielectric materials of the dielectric layers **112***c*, **112***d* and **112***e* of the RDL structure **110** are the same. For example, the dielectric materials of the dielectric layers **112***c*, **112***d* and **112***e* of the RDL structure **110** are silicon oxide. However, the disclosure is not limited thereto. In alternative embodiments, the dielectric materials filling the antenna cavity **135** are different.

The conductive lines **116***c* may be also referred to as a third-level conductive line of the RDL structure **110**. In some embodiments, the conductive patterns **132***a*, **132***b* of the ground plane **130** are disposed adjacent to the conductive lines **116***c* and embedded in the third-level conductive lines of the RDL structure **110**. The ground plane **130** may be simultaneously formed with the third-level conductive line of the RDL structure **110** by the same process. For example, the dielectric layer **112***f* is patterned utilizing a combination of photolithography and etching techniques to form openings corresponding to the desired pattern of the conductive patterns **132***a*, **132***b* and the conductive lines **116***c*. After that, the openings are filled with a conductive material to form the conductive patterns **132***a*, **132***b* and the conductive lines **116***c*. In some embodiments, a seed layer is deposited on surfaces of the openings, and then a conductive material fills the openings by electroplating. Suitable materials for the seed layer include copper, copper alloy, or the like, and suitable materials for the conductive material include copper, silver, gold, tungsten, aluminum, combinations thereof, or the like. A chemical mechanical planarization (CMP) process or the like may be used to remove excess seed layer and/or conductive material from a surface of the dielectric layer **112***f* and to planarize surfaces of the dielectric layer **112***f*, the conductive patterns **132***a*, **132***b* and the conductive lines **116***c* for subsequent processing. In alternative embodiments, the ground plane **130** and the conductive lines **116***c* are formed separately. In some embodiments, the conductive vias **114***c* and the conductive lines **116***c* are separately formed and disposed in different dielectric layers respectively. However, the disclosure is not limited thereto. The conductive vias **114***c* and the conductive lines **116***c* may be formed simultaneously by a dual-damascene process, and the conductive vias **114***c* and the conductive lines **116***c* may be formed in the same dielectric layer. In such embodiments, one of the dielectric layers **112***e* and **112***f* is omitted.

In some embodiments, the material of the conductive patterns **132***a*, **132***b* is substantially the same as the conductive lines **116***c*. However, the disclosure is not limited thereto. In alternative embodiments, the material of the conductive patterns **132***a*, **132***b* is different from the conductive lines **116***c*. In some embodiments, top and bottom surfaces of the conductive patterns **132***a*, **132***b* are be substantially coplanar with top and bottom surfaces of the conductive lines **116***c* respectively.

Referring to FIG. **1**E, after forming the ground plane **130**, a plurality of conductive vias **142** and a plurality of conductive patterns **144** are formed over the ground plane **130**. In some embodiments, the conductive vias **142** are disposed in a dielectric layer **112***g* over the dielectric layer **112***f*, and the conductive patterns **144** are disposed in a dielectric layer **112***h* over the dielectric layer **112***g*. However, the disclosure is not limited thereto. The conductive vias **142** and the conductive patterns **144** may be formed in the same dielectric layer and formed by the same process. In some embodiments, the conductive vias **142** and the conductive patterns **144** include a conductive material such as copper, silver, gold, tungsten, aluminum, combinations thereof, or the like. In an embodiment, the conductive vias **142** are aluminum vias, and the conductive patterns **144** are aluminum pads.

Then, in some embodiments, a passivation layer **146** is formed to cover the conductive patterns **144**, and the conductive patterns **150** are formed in the passivation layer **146** to electrically connect the conductive patterns **144**. The conductive patterns **150** may be under-bump metallurgy (UBM) patterns. After forming the conductive patterns **150**, a plurality of electrical connectors **152** are formed on the conductive patterns **150** respectively, to electrically connect the conductive patterns **144** therebelow. In some embodiments, the electrical connectors **152** are micro-bumps, solder balls such as a ball grid array (BGA), metal pillars, electroless nickel-electroless palladium-immersion gold technique (ENEPIG) formed bumps, or the like. In such embodiments, the bump electrical connectors **152** include a conductive material such as solder, copper, aluminum, gold, nickel, silver, palladium, tin, the like, or a combination thereof. In an embodiment, the electrical connectors **152** are formed by initially forming a layer of solder through suitable methods such as evaporation, electroplating, printing, solder transfer, ball placement, or the like. Once the layer of solder has been formed on the structure, a reflow may be performed in order to shape the material into the desired bump shapes.

Referring to FIG. **1**F, a plurality of dies **160**A, **160**B are formed over the RDL structure **110** through the electrical connectors **152**. The dies **160**A, **160**B may each include a semiconductor substrate **162**, a protection layer **164** over the semiconductor substrate **162** and conductive connectors **166** in the protection layer **164**. The semiconductor substrate **162** may be a semiconductor substrate and may be made of a suitable elemental semiconductor, such as crystalline silicon, diamond, or germanium; a suitable compound semiconductor, such as gallium arsenide, silicon carbide, indium arsenide, or indium phosphide; or a suitable alloy semiconductor, such as silicon germanium carbide, gallium arsenic phosphide, or gallium indium phosphide. In some embodiments, a material of the protection layer **164** includes polybenzoxazole, polyimide, a suitable organic or inorganic material, or the like. In some embodiments, the conductive connectors **166** include conductive vias, vias, bumps and/or posts made of solder, gold, copper, or any other suitable conductive materials. In some embodiments, the conductive connectors **166** of the dies **160**A, **160**B are bonded to the electrical connectors **152** respectively. The dies **160**A, **160**B may include a variety of electrical circuits suitable for a particular application. The electrical circuits may include various devices such as transistors, capacitors, resistors, diodes or the like. In some embodiments, the electrical circuits include transistors electrically connected to the antenna pad **120** and used for configuring the transmission and reception of the electromagnetic signal. In some embodiments, the die **160**A, **160**B is a die, a chip or a package. In some embodiments, the die **160**A, **160**B is a logic device die, a central processing unit (CPU) die, a graphics processing unit (GPU) die, a mobile phone application processing (AP) die, a system on chip (SoC) that integrates multiple electronic components into a single die, or a high bandwidth memory (HBM) die. The die **160**B may be operable in pairs with the die **160**A. In some embodiments, the die **160**A is a RF controller die (e.g., RF transceiver die), and the die **160**B is a baseband die. In some embodiments, the RF transceiver die includes a transmitter circuit configured to generate an electrical signal and a receiving circuit configured to receive the electrical signal.

Then, an underfill **170** may be formed between the dies **160**A, **160**B and the RDL structure **110** to surround the conductive connectors **166** of the dies **160**A, **160**B. The underfill **170** may be formed by a capillary flow process after the dies **160**A, **160**B are attached, or may be formed by a suitable deposition method before the dies **160**A, **160**B are attached.

After forming the underfill **170**, an encapsulant **172** is formed over the dies **160**A, **160**B and the underfill **170**. The encapsulant **172** may be a molding compound, epoxy, or the like, and may be applied by compression molding, transfer molding, or the like. The encapsulant **172** may be formed over the redistribution structure **110** such that the dies **160**A, **160**B are buried or covered. The encapsulant **172** is then cured.

Referring to FIG. **1**G, the carrier **101** is de-bonded and is separated from the interposer **104**. In some embodiments, the de-bonding process includes projecting a light such as a laser light or an UV light on the de-bonding layer **102** (e.g., the LTHC release layer), so that the carrier **101** can be easily removed along with the de-bonding layer **102**. During the de-bonding step, a tape (not shown) may be used to secure the structure before de-bonding the carrier **101** and the de-bonding layer **102**. After removing the carrier **101** and the de-bonding layer **102**, a plurality of conductive patterns **180** such as UBM patterns are formed on the through vias **108** respectively. After forming the conductive patterns **180**, a plurality of electrical connectors **182** are formed on the conductive patterns **180** respectively, to electrically connect the conductive patterns **180** therebelow. In some embodiments, the electrical connectors **182** are controlled collapse chip connection (C4) bumps, solder balls such as a ball grid array (BGA), metal pillars, electroless nickel-electroless palladium-immersion gold technique (ENEPIG) formed bumps, or the like. In such embodiments, the bump electrical connectors **182** include a conductive material such as solder, copper, aluminum, gold, nickel, silver, palladium, tin, the like, or a combination thereof. In an embodiment, the electrical connectors **182** are formed by initially forming a layer of solder through suitable methods such as evaporation, electroplating, printing, solder transfer, ball placement, or the like. Once the layer of solder has been formed on the structure, a reflow may be performed in order to shape the material into the desired bump shapes. The removal of the carrier **101** and the de-bonding layer **102** and/or formation of the conductive patterns **180** and the electrical connectors **182** may be performed while the encapsulant **172** is on a tape. The electrical connectors **182** and the dies **160**A, **160**B are disposed at opposite sides of the interposer **104**. In some embodiments, after forming the electrical connectors **182**, a semiconductor structure **100** is formed. In some embodiments, the semiconductor structure **100** is a semiconductor package. In some embodiments, the semiconductor structure **100** is an integrated fan out (InFO) package, where I/O terminals of the die **160**A or the die **160**B are fanned out and redistributed over a surface of the die **160**A or the die **160**B in a greater area. In some embodiments, the semiconductor structure **100** is a chip-on-wafer-on-substrate (CoWoS) packaging device. In some embodiments, the semiconductor structure **100** is a three-dimensional integrated circuit (3D IC). In some embodiments, the semiconductor structure **100** is configured to perform an ultra-high speed signal transmission at a high frequency, e.g., a signal transmission at a frequency substantially greater than about 10 (GHz) within the semiconductor structure **100**.

The electrical connectors **182** may be configured to provide power and/or signal to the dies **160**A, **160**B from other computing device (not shown). For example, as shown in FIG. **1**G, one of the electrical connectors **182** is electrically connected to the die **160**B through the interposer **104**, the RDL structure **110** and the electrical connector **152**. Similarly, although not shown in FIG. **1**G, the electrical connectors **182** may be electrically connected to the die **160**A through the interposer **104**, the RDL structure **110** and the electrical connector **152**. In addition, one of the electrical connectors **182** may be electrically connected to the ground plane **130**.

The die **160**A may provide RF signal to the antenna pad **120**. For example, as shown in FIG. **1**G, the die **160**A provides the RF signal to the antenna pad **120** through the electrical connector **152**, the conductive pattern **150**, the conductive pattern **144**, the conductive via **142**, the conductive line **116***c*, the conductive via **114***c*, the conductive pattern **124** and the conductive pattern **122** sequentially. In some embodiments, as shown in FIG. **1**G, an RF signal **190** is emitted from the antenna pad **120** through the antenna cavity **135** and is upward transmitted by passing through the slits **134** of the ground plane **130**. The RF signal **190** may be a signal at a frequency substantially greater than about 10 GHz. For example, the RF signal **190** is a signal at a frequency substantially greater than about 100 GHz. In some embodiments, the antenna pad **120**, the conductive patterns **122**, **124** and the ground plane **130** are embedded in the RDL structure **110**. Accordingly, the antenna cavity **135** surrounded by the sidewalls of the conductive patterns **122**, **124** is also embedded in the RDL structure **110**. In other words, the semiconductor structure **100** may be a semiconductor package with an embedded antenna cavity for RF upward transceiving. Thus, the semiconductor structure **100** with the antenna cavity **135** may have a reduced size. In some embodiments, the antenna pad **120**, the conductive patterns **122**, **124** and the ground plane **130** are formed simultaneously with the RDL structure **110**, and thus the cost and/or time of manufacturing the semiconductor structure **100** is not increased largely. In addition, a thickness of the interposer **104** may be adjusted based on the requirements.

In some embodiments, the conductive patterns **122** aside the antenna cavity **135** are illustrated as a plurality of discrete through vias arranged along one ring-shaped path P, however, the disclosure is not limited thereto. In other words, the conductive patterns **122** may be arranged along a plurality of ring-shaped paths. In some embodiments, as shown in FIGS. **3**A and **3**B, the conductive patterns **122***a*, **122***b* include a plurality of through vias arranged along a plurality of ring-shaped paths P**1**, P**2**. In some embodiments, a first group of discrete conductive patterns **122***a* is arranged along the first ring-shaped path P**1**, a second group of discrete conductive patterns **122***b* is arranged along the second ring-shaped path P**2** surrounded by the first ring-shaped path P**1**, and the ring-shaped paths P**1**, P**2** respectively surround the area AR. In some embodiments, the first ring-shaped path P**1** is disposed between the second ring-shaped path P**2** and the periphery **120***p* of the antenna pad **120**. In some embodiments, the second group of the conductive patterns **122***b* is disposed between the first group of the conductive patterns **122***a* and the area AR. In some embodiments, a diameter (e.g., width) of the conductive patterns **122***a* is the same as or different from a diameter (e.g., width) of the conductive patterns **122***b*. In some embodiments, in a direction (such as the first direction D**1** or the second direction D**2**) perpendicular to the stacking direction, one of the conductive patterns **122***a* of the first group is not overlapped with one of the conductive patterns **122***b* of the second group. Thus, the conductive patterns

122*a* and the conductive patterns 122*b* may be arranged closely. In such embodiments, compared to merely disposing the conductive patterns 122*a* or the conductive patterns 122*b*, the conductive patterns 122*a* and the conductive patterns 122*b* cooperatively form a surrounding sidewall for the antenna cavity 135. In some embodiments, as shown in FIG. 4, in the direction (such as the first direction D1 or the second direction D2) perpendicular to the stacking direction, the conductive pattern 122*a* and the conductive pattern 122*b* are partially overlapped with each other. In alternative embodiments (not shown), in the direction (such as the first direction D1 or the second direction D2) perpendicular to the stacking direction, the conductive pattern 122*a* and the conductive pattern 122*b* are fully overlapped with each other. In such embodiments, the conductive pattern 122*a* and the conductive pattern 122*b* are aligned with each other.

The conductive pattern 122 may have other configurations. For example, as shown in FIG. 5, the conductive pattern 122 is a ring-shaped structure surrounding the area AR. The conductive pattern 122 is continuously formed along a ring-shaped path P. In some embodiments, the conductive pattern 122 has a uniform dimension (i.e., width). However, the disclosure is not limited thereto. In alternative embodiments, the conductive pattern 122 has different dimension (i.e., width). In some embodiments, the dimension (i.e., width) of the conductive pattern 122 ranges from about 0.1 μm to about 100 μm. In alternative embodiments, as shown in FIG. 6 and FIG. 7, the conductive patterns 122 are a plurality of discrete wall-shaped structures. In some embodiments, as shown in FIG. 6, the conductive patterns 122 (i.e., the wall-shaped structures) are separated from each other and arranged along one ring-shaped path P. In some embodiments, as shown in FIG. 7, a first group of discrete conductive patterns 122*a* (i.e., the wall-shaped structures) is arranged along the first ring-shaped path P1, a second group of discrete conductive patterns 122*b* (i.e., the wall-shaped structures) is arranged along the second ring-shaped path P2 surrounded by the first ring-shaped path P1, and the ring-shaped paths P1, P2 respectively surround the area AR. Thus, the conductive patterns 122*a* and the conductive patterns 122*b* may be arranged closely. In such embodiments, compared to merely disposing the conductive patterns 122*a* or the conductive patterns 122*b*, the conductive patterns 122*a* and the conductive patterns 122*b* cooperatively form a more effective sidewall for the antenna cavity 135. In some embodiments, the conductive patterns 122, 122*a*, 122*b* are respectively disposed at one side of the antenna pad 120. However, the disclosure is not limited thereto. In some embodiments, as shown in FIG. 8, at least one of the conductive patterns 122 is continuously disposed at two adjacent sides of the antenna pad 120. In alternative embodiments, at least one of the conductive patterns 122 is continuously disposed at three or four adjacent sides of the antenna pad 120.

In some embodiments, as shown in FIGS. 9A and 9B, the conductive patterns 122 are only formed for electrical connection between the antenna pad 120 and the conductive pattern 124. In other words, the conductive patterns 122 may be not arranged to surround an area AR of the antenna pad 120. In such embodiments, a vertical distance between the antenna pad 120 and the conductive pattern 124 is relatively small, and thus the antenna cavity 135 is formed by the antenna pad 120, the ground plane 130 and the inner sidewalls of the conductive patterns 124. The conductive patterns 122 may have other configurations and/or arrangement.

FIG. 10 illustrates a method of forming a semiconductor structure in accordance with some embodiments. Although the method is illustrated and/or described as a series of acts or events, it will be appreciated that the method is not limited to the illustrated ordering or acts. Thus, in some embodiments, the acts may be carried out in different orders than illustrated, and/or may be carried out concurrently. Further, in some embodiments, the illustrated acts or events may be subdivided into multiple acts or events, which may be carried out at separate times or concurrently with other acts or sub-acts. In some embodiments, some illustrated acts or events may be omitted, and other un-illustrated acts or events may be included.

At act S200, an antenna pad is formed over an interposer. FIG. 1B and FIG. 3A illustrate varying views corresponding to some embodiments of act S200.

At act S202, at least one first conductive pattern is formed over the antenna pad and along a periphery of the antenna pad. FIG. 1C, FIG. 2, FIG. 3A, FIG. 3B, FIG. 4, FIG. 5, FIG. 6, FIG. 7 and FIG. 8 illustrate varying views corresponding to some embodiments of act S202.

At act S204, a ground plane is formed over the at least one first conductive pattern, wherein the ground plane includes a plurality of second conductive patterns separated from one another and overlapped with the antenna pad. FIG. 1D, FIG. 2, FIG. 3A, FIG. 3B, FIG. 4, FIG. 5, FIG. 6, FIG. 7 and FIG. 8 illustrate varying views corresponding to some embodiments of act S204.

In accordance with some embodiments of the disclosure, a semiconductor structure includes an antenna pad, a ground plane and a plurality of conductive vias. The ground plane is disposed over the antenna pad and includes a plurality of first conductive patterns separated from one another. The conductive vias are disposed between the antenna pad and the ground plane. The plurality of conductive vias are arranged to surround an area of the antenna pad and electrically connected to the antenna pad, and the plurality of first conductive patterns are overlapped with the area of the antenna pad.

In accordance with some embodiments of the disclosure, a semiconductor structure includes an interposer, an antenna pad, at least one first conductive pattern, at least one second conductive pattern, a ground plane and at least one die. The antenna pad is disposed over the interposer. The at least one first conductive pattern is disposed along a periphery of the antenna pad. The at least one second conductive pattern is disposed over the at least one first conductive pattern. The ground plane is disposed over the at least one second conductive pattern, and includes a plurality of third conductive patterns separated from one another and overlapped with the antenna pad. The at least one die is disposed over the ground plane and electrically connected to the antenna pad.

In accordance with some embodiments of the disclosure, a method of forming a semiconductor structure includes the following steps. An antenna pad is formed over an interposer. At least one first conductive pattern is formed over the antenna pad and along a periphery of the antenna pad. A ground plane is formed over the at least one first conductive pattern, wherein the ground plane comprises a plurality of second conductive patterns separated from one another and overlapped with the antenna pad.

The foregoing outlines features of several embodiments so that those skilled in the art may better understand the aspects of the present disclosure. Those skilled in the art should appreciate that they may readily use the present disclosure as a basis for designing or modifying other

processes and structures for carrying out the same purposes and/or achieving the same advantages of the embodiments introduced herein. Those skilled in the art should also realize that such equivalent constructions do not depart from the spirit and scope of the present disclosure, and that they may make various changes, substitutions, and alterations herein without departing from the spirit and scope of the present disclosure.

What is claimed is:

1. A semiconductor structure, comprising:

a substrate;

an antenna pad over the substrate;

a ground plane over the antenna pad, comprising a plurality of first conductive patterns separated from one another; a plurality of first conductive vias between the antenna pad and the ground plane, wherein the plurality of first conductive vias are arranged to surround an area of the antenna pad and electrically connected to the antenna pad, and the plurality of first conductive patterns are overlapped with the area of the antenna pad; and

a second conductive via, wherein the second conductive via is disposed outside the plurality of first conductive vias and the area of the antenna pad, and a projection of the second conductive via onto the substrate is separated from a projection of the antenna pad onto the substrate and a projection of the ground plane onto the substrate.

2. The semiconductor structure according to claim **1** further comprising a dielectric material filling an antenna cavity defined by the area of the antenna pad, the ground plane and inner sidewalls of the plurality of first conductive vias.

3. The semiconductor structure according to claim **1**, wherein the plurality of first conductive vias are arranged along a first ring-shaped path and arranged along a second ring-shaped path, and the first ring-shaped path is between the second ring-shaped path and a periphery of the antenna pad.

4. The semiconductor structure according to claim **1** further comprising a plurality of dielectric patterns between the plurality of first conductive patterns of the ground plane.

5. The semiconductor structure according to claim **1**, wherein the plurality of first conductive vias are in direct contact with the antenna pad.

6. The semiconductor structure according to claim **1** further comprising a second conductive pattern between the plurality of first conductive vias and the plurality of first conductive patterns, wherein the second conductive pattern covers and electrically connects portions of the plurality of first conductive vias.

7. The semiconductor structure according to claim **1**, wherein the second conductive via and the plurality of first conductive vias are disposed in a dielectric layer, and the second conductive via is electrically connected to a conductive line physically separated from the antenna pad.

8. A semiconductor structure, comprising:

an antenna pad;

at least one first conductive pattern disposed along a periphery of the antenna pad;

at least one second conductive pattern over the at least one first conductive pattern;

a ground plane over the at least one second conductive pattern, comprising a plurality of third conductive patterns separated from one another and overlapped with the antenna pad; at least one die, disposed over the ground plane and electrically connected to the antenna pad; and

a redistribution layer structure, comprising

a first conductive line and a first dielectric layer aside the first conductive line and the antenna pad;

a first conductive via and a second dielectric layer aside the first conductive via and the at least one first conductive pattern;

a second conductive line and a third dielectric layer aside the second conductive line and the at least one second conductive pattern; and

a third conductive line and a fourth dielectric layer aside the third conductive line and the plurality of third conductive patterns.

9. The semiconductor structure according to claim **8**, wherein the at least one first conductive pattern comprises a plurality of conductive vias.

10. The semiconductor structure according to claim **8**, wherein the at least one first conductive pattern comprises a plurality of wall-shaped structures.

11. The semiconductor structure according to claim **8**, wherein the at least one first conductive pattern comprises a wall-shaped structure continuously disposed along the periphery of the antenna pad.

12. The semiconductor structure according to claim **8** further comprising a dielectric material filled in an antenna cavity among the antenna pad, the ground plane and sidewalls of the at least one first conductive pattern and the at least one second conductive pattern.

13. The semiconductor structure according to claim **8**, wherein a top surface of the antenna pad is substantially coplanar with a top surface of the first conductive line, and a bottom surface of the antenna pad is substantially coplanar with a bottom surface of the first conductive line.

14. The semiconductor structure according to claim **8**, wherein the at least one die is electrically connected to the antenna pad through the at least one first conductive pattern and the at least one second conductive pattern.

15. The semiconductor structure according to claim **8**, wherein an inner sidewall of the outermost third conductive pattern is substantially flush with an inner sidewall of the at least one second conductive pattern.

16. The semiconductor structure according to claim **8** further comprising a plurality of electrical connectors, wherein the plurality of electrical connectors and the at least one die are disposed at opposite sides of an interposer.

17. A semiconductor structure, comprising:

an interposer;

an antenna pad over the interposer;

at least one first conductive pattern disposed over the antenna pad;

a ground plane disposed over the at least one first conductive pattern;

at least one die, disposed over the ground plane and electrically connected to the antenna pad; and

a plurality of electrical connectors, wherein the plurality of electrical connectors and the at least one die are disposed at opposite sides of the interposer, and the antenna pad, the at least one first conductive pattern and the ground plane are overlapped.

18. The semiconductor structure according to claim **17**, wherein the at least one first conductive pattern comprises a plurality of conductive vias disposed along a periphery of the antenna pad.

19. The semiconductor structure according to claim **17**, further comprising a third conductive pattern covering portions of the at least one first conductive pattern.

20. The semiconductor structure according to claim **17**, wherein the at least one die comprises a first die and a second die, and the antenna pad, the at least one first conductive pattern and the ground plane are disposed between the first die and the second die.

* * * * *