US 20250269952A1

(19) United States

(12) Patent Application Publication

Bradford et al.

(10) Pub. No.: US 2025/0269952 A1

(43) Pub. Date: Aug. 28, 2025

(54) **FOUR-BAR FLAPPING ROTORS FOR AIRCRAFT AND ASSOCIATED METHODS**

(71) Applicant: **The Boeing Company**, Arlington, VA (US)

(72) Inventors: **Mark Jerome Bradford**, Chalfont, PA (US); **Brian Patrick Garrett**, Media, PA (US); **Tejaswi Peri**, Newtown Square, PA (US)

(21) Appl. No.: **18/589,295**

(22) Filed: **Feb. 27, 2024**

Publication Classification

(51) **Int. Cl.**
B64C 27/41 (2006.01)

(52) **U.S. Cl.**
CPC *B64C 27/41* (2013.01); *B64C 27/39* (2013.01)

(57) **ABSTRACT**

Four-bar flapping rotors for aircraft and associated methods are disclosed. An example a flapping rotor hub described herein includes a rotor hub having a first end and a second end, the first end opposite the second end along an axis of rotation of the rotor hub, a first link rotatably coupled to the rotor hub at the first end, the first link to rotate in a plane parallel to the axis of rotation, a second link rotatably coupled to the rotor hub at the second end, the second link to rotate in the plane, and a pitch housing rotatably coupled to the first link at a third end of the pitch housing, the pitch housing rotatably coupled to the second link at a fourth end of the pitch housing, the pitch housing to rotate and translate in the plane, the pitch housing to receive a rotor blade.

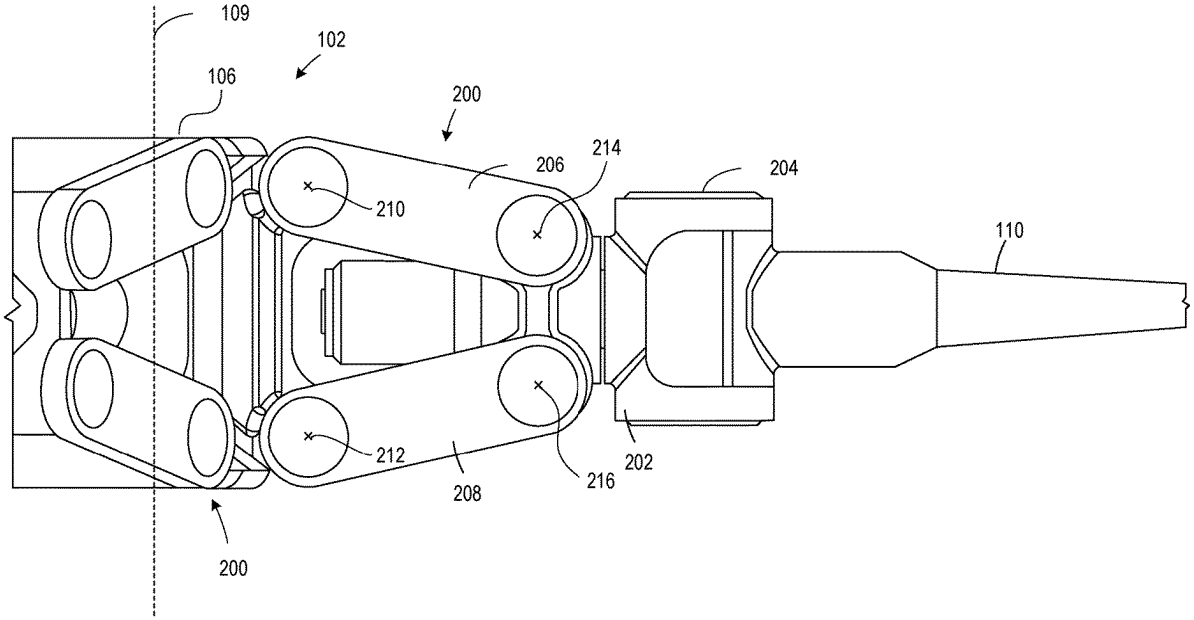

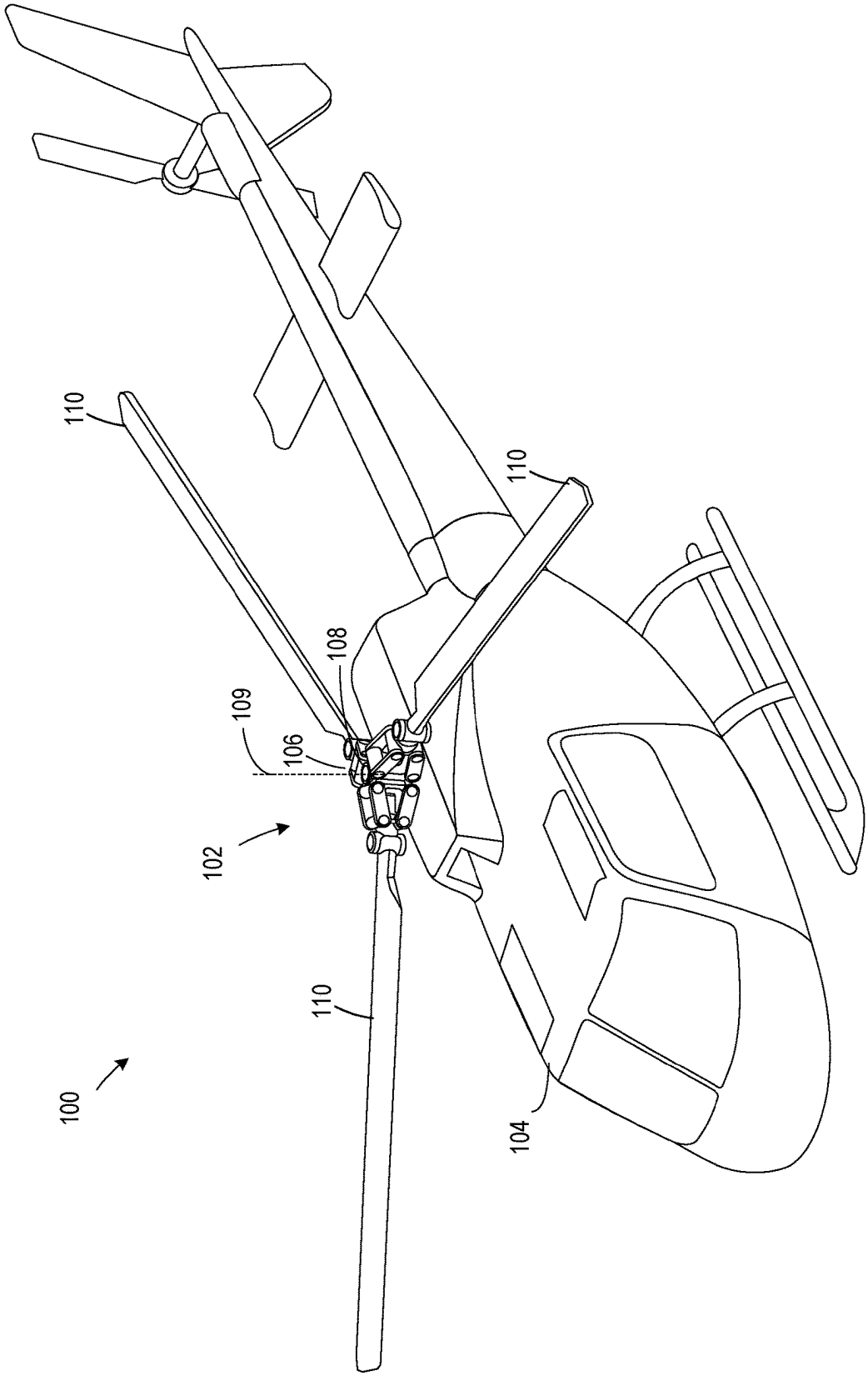

FIG. 1

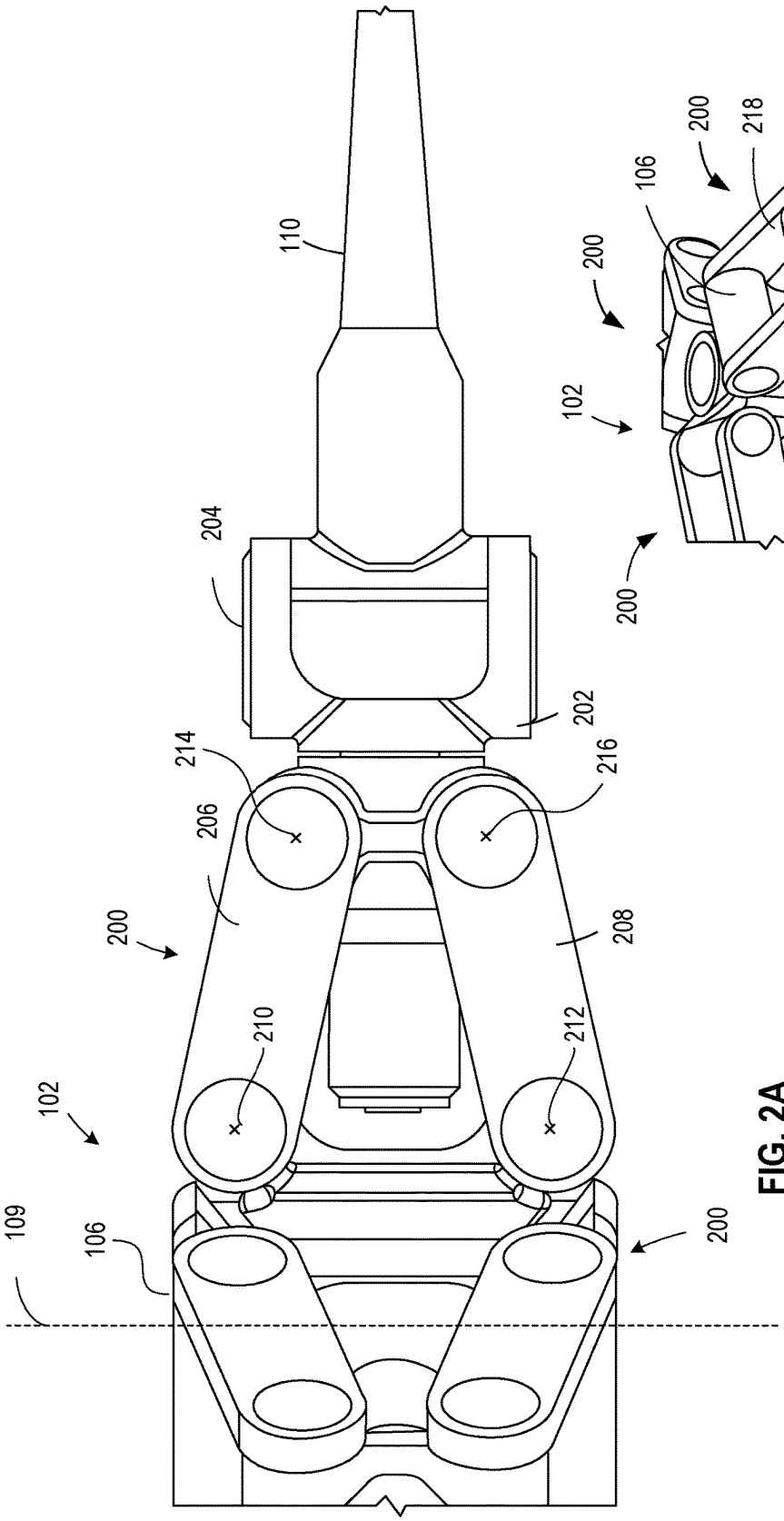
110
204
202
214
216
206
200
208
210
212
102
109
106
200

FIG. 2A

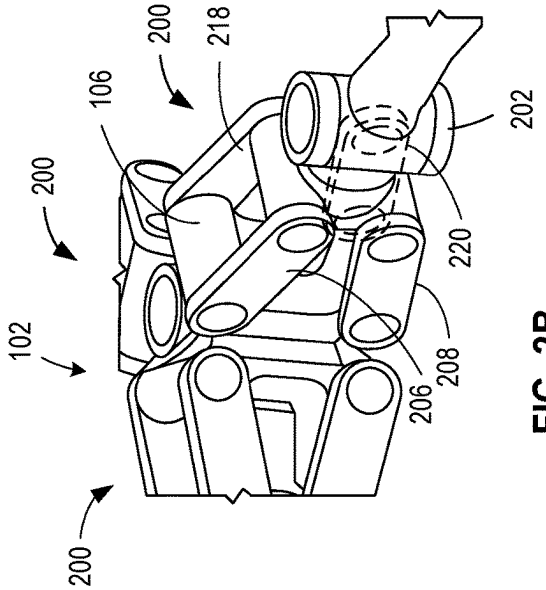
200
218
106
200
102
200
202
220
208
206

FIG. 2B

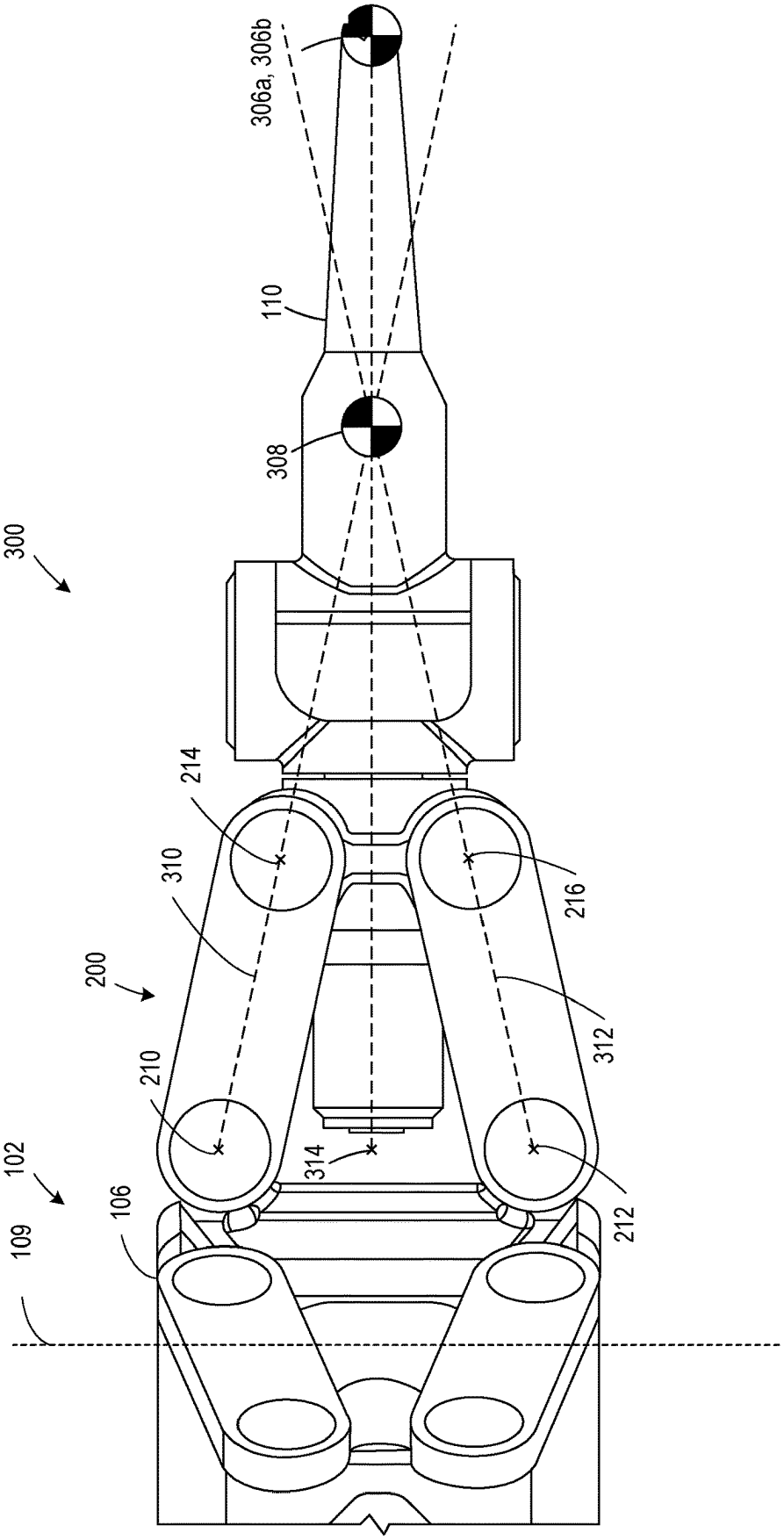
300
306a, 306b
110
308
214
310
200
210
102
106
109
216
312
314
212

FIG. 3A

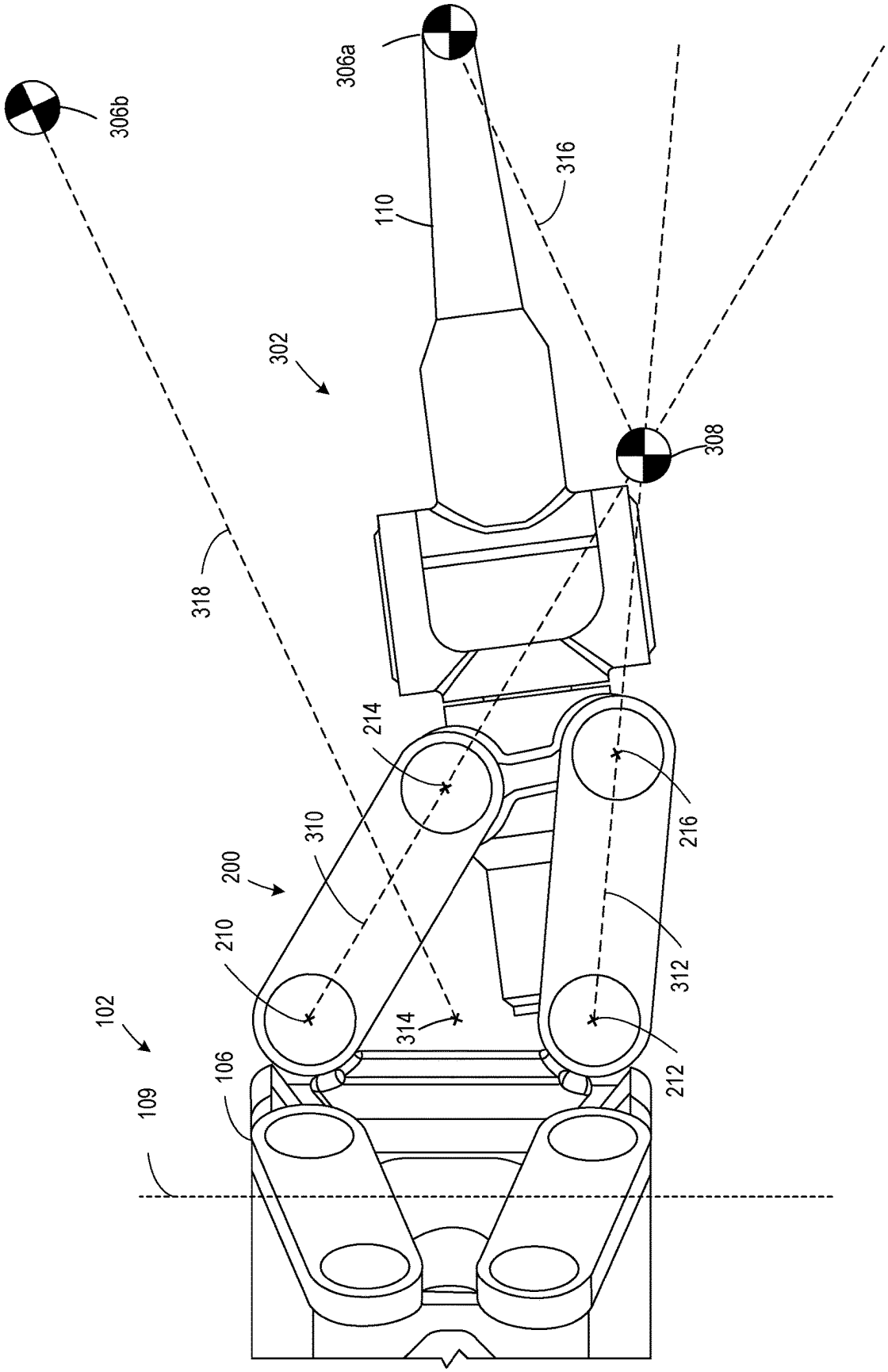
306b
306a
110
316
302
308
318
214
216
310
200
210
312
102
314
106
212
109

FIG. 3B

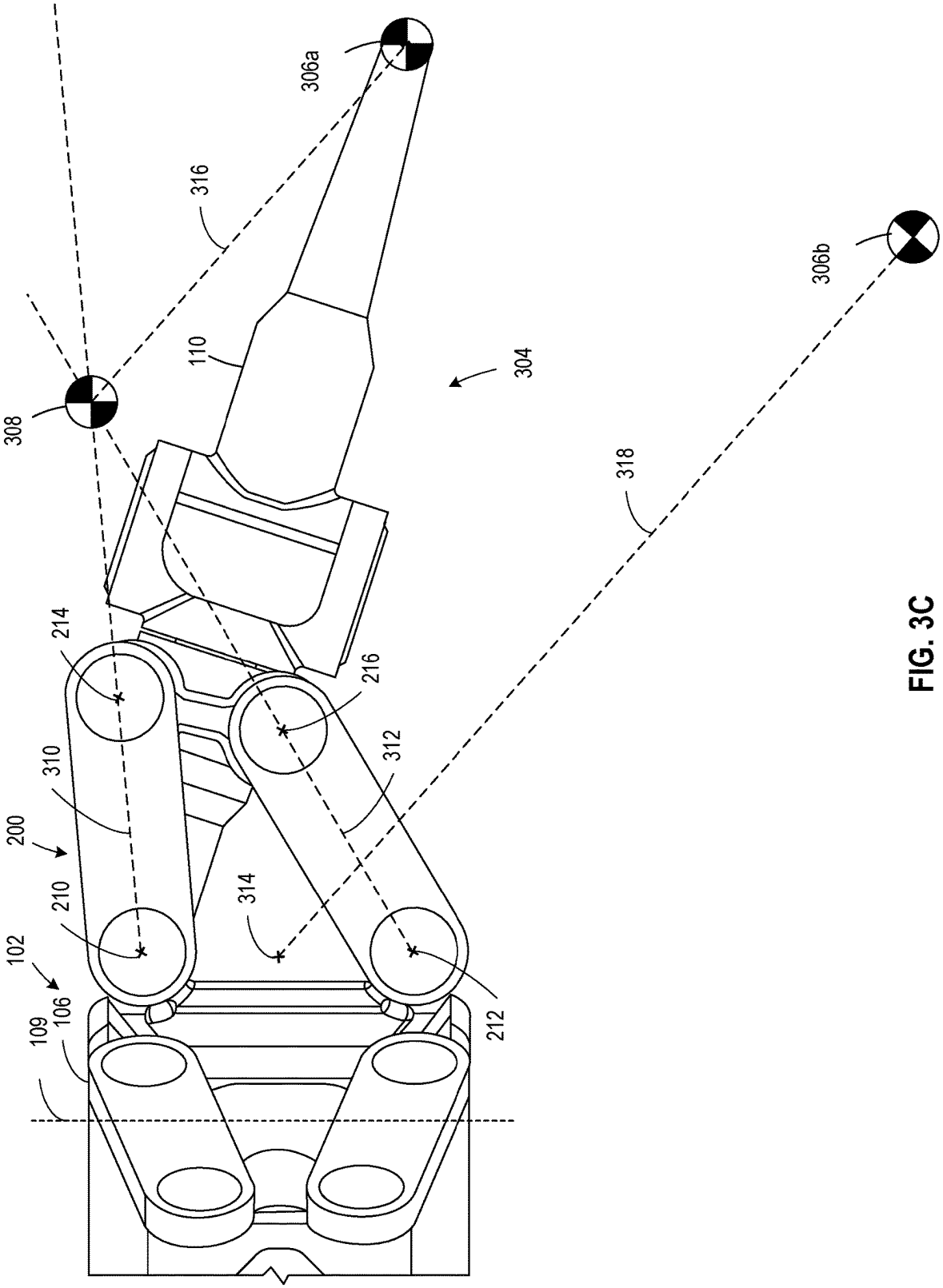
306a
316
110
304
308
306b
318
214
216
312
310
200
314
210
102
212
106
109

FIG. 3C

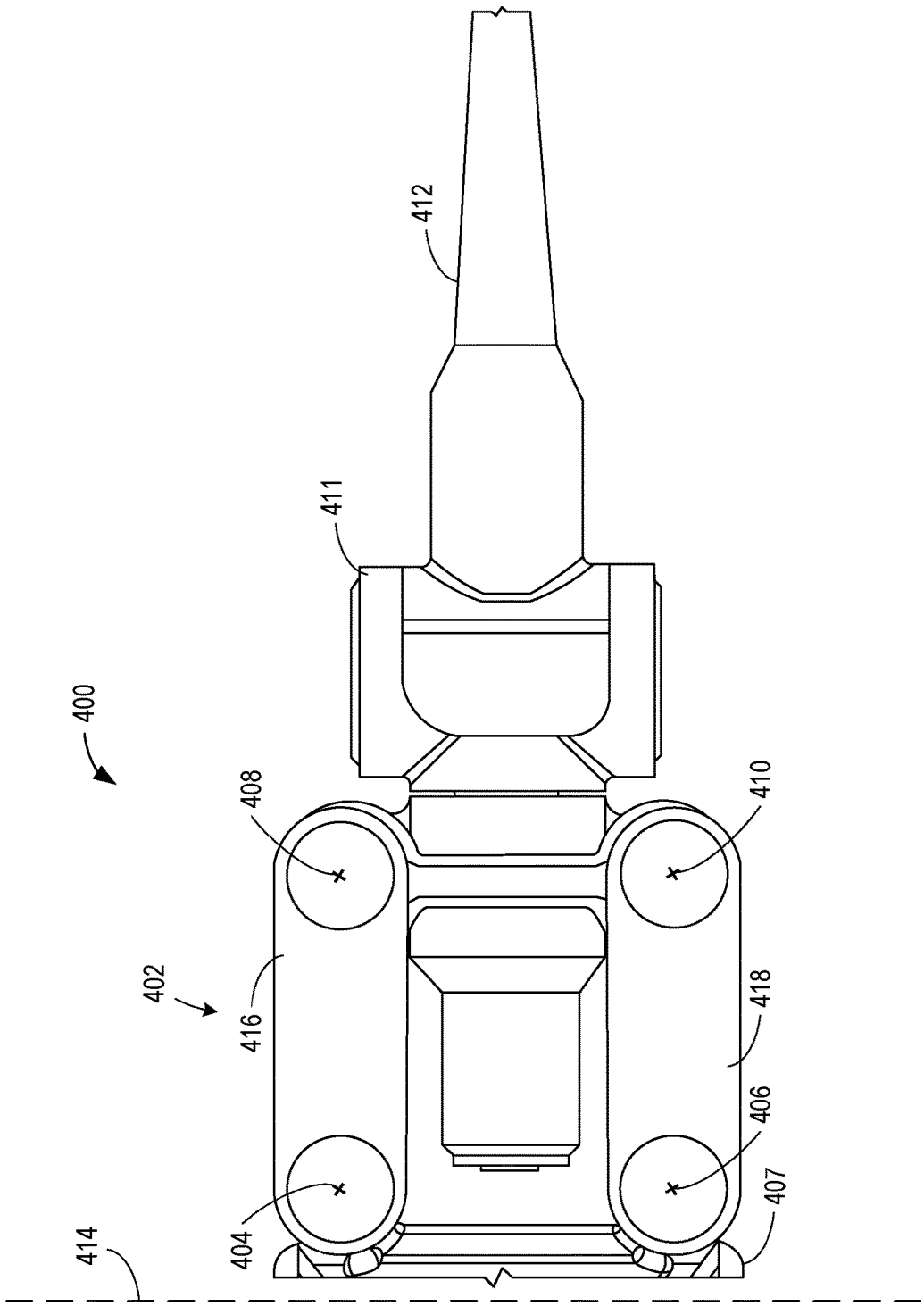

FIG. 4

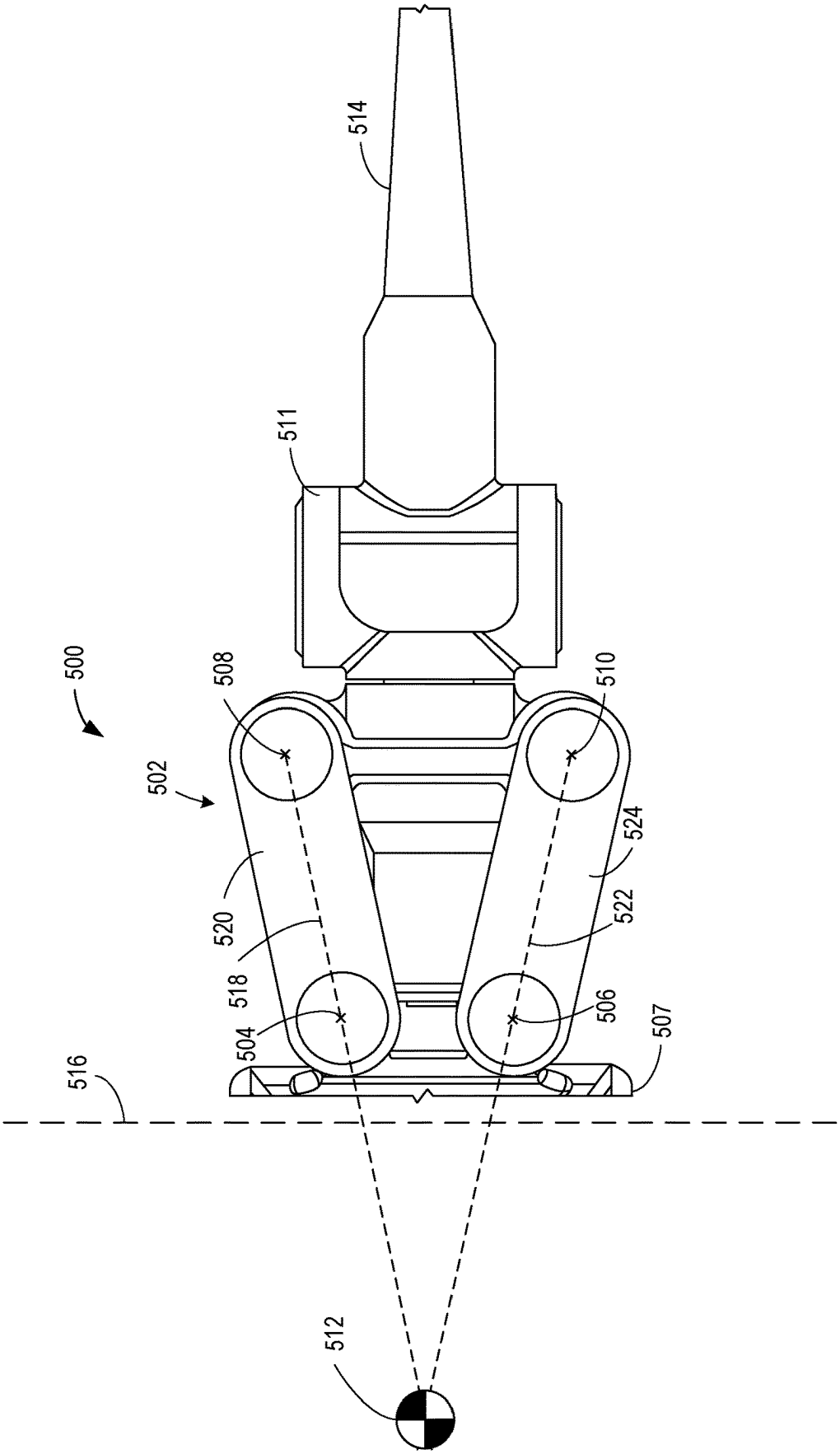

FIG. 5

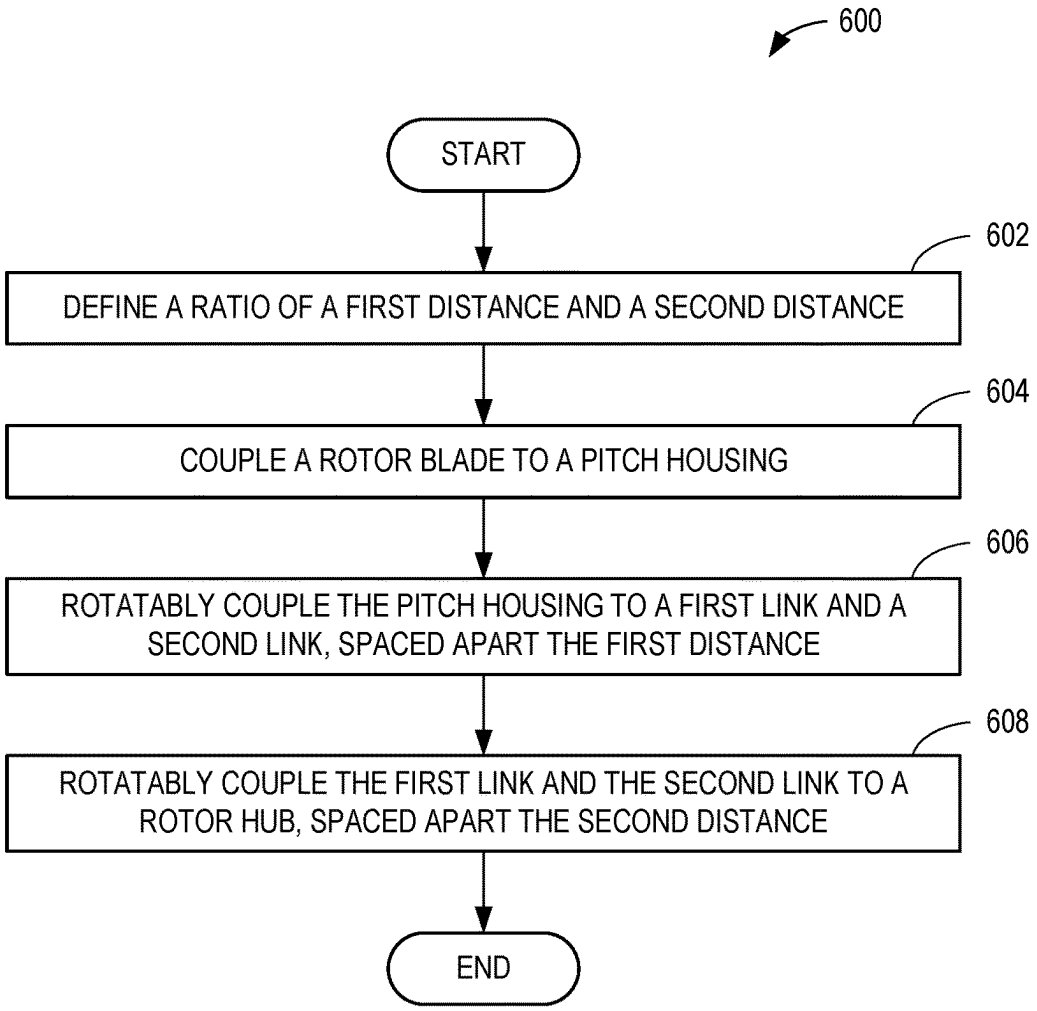
600
START
602
DEFINE A RATIO OF A FIRST DISTANCE AND A SECOND DISTANCE
604
COUPLE A ROTOR BLADE TO A PITCH HOUSING
606
ROTATABLY COUPLE THE PITCH HOUSING TO A FIRST LINK AND A SECOND LINK, SPACED APART THE FIRST DISTANCE
608
ROTATABLY COUPLE THE FIRST LINK AND THE SECOND LINK TO A ROTOR HUB, SPACED APART THE SECOND DISTANCE
END

FIG. 6

FOUR-BAR FLAPPING ROTORS FOR AIRCRAFT AND ASSOCIATED METHODS

FIELD

[0001] This disclosure relates generally to aircraft and, more particularly, to four-bar flapping rotors for aircraft and associated methods.

BACKGROUND

[0002] In recent years, helicopters and other rotorcraft utilize rotor designs that are rigid, semi-rigid, and fully articulated. Rigid rotors rigidly couple the rotor blades to the hub. As such, the various forces and moments that occur during operation of the helicopter are transferred directly from the rotor blades to the hub. Semi-rigid rotors rigidly couple the rotor blades to the hub but add a hinge to the hub to allow for free movement of the rotor blades in a flapping or seesaw direction. In this way, the stresses on the hub and rotor blades are reduced as the rotor blades are allowed to move in response to the forces and moments that occur during operation of the helicopter. Fully articulated rotors couple the rotor blades to the hubs using a series of hinges that allow for the rotor blades to move freely in the flapping direction and the lead-lag direction. As such, the rotor blades of fully articulated rotors nearly eliminate moments transferred to the hub in response to operation of the helicopter.

SUMMARY

[0003] An example a flapping rotor hub described herein includes a rotor hub having a first end and a second end, the first end opposite the second end along an axis of rotation of the rotor hub, a first link rotatably coupled to the rotor hub at the first end, the first link to rotate in a plane parallel to the axis of rotation, a second link rotatably coupled to the rotor hub at the second end, the second link to rotate in the plane, and a pitch housing rotatably coupled to the first link at a third end of the pitch housing, the pitch housing rotatably coupled to the second link at a fourth end of the pitch housing, the third end different than the fourth end, the pitch housing to rotate and translate in the plane, the pitch housing to receive a rotor blade.

[0004] An example rotorcraft described herein includes a mast having an axis of rotation, a hub coupled to the mast, a rotor blade coupled to the hub and substantially perpendicular to the axis of rotation, and a four-bar linkage coupled to the hub and the rotor blade. The four-bar linkage includes a ground link fixedly coupled to the hub, the ground link having a first end spaced from a second end, the first end and the second end to form a line parallel to the axis of rotation, a first link rotatably coupled to the ground link at the first end, the first link to rotate in a plane parallel to the axis of rotation, a second link rotatably coupled to the ground link at the second end, the second link to rotate in the plane. The rotorcraft further includes a pitch housing having a third end spaced from a fourth end, the pitch housing rotatably coupled to the first link at the third end, the pitch housing rotatably coupled to the second link at the fourth end, the pitch housing to move along the plane, the pitch housing coupled to the rotor blade.

[0005] An example method of forming a flapping rotor is described herein. The method includes coupling a rotor blade to a pitch housing, rotatably coupling the pitch housing to a first link and a second link, the first link coupled to the pitch housing spaced apart from the second link a first distance, rotatably coupling the first link and the second link to a rotor hub, the first link coupled to the rotor hub spaced apart from the second link a second distance, and defining a ratio of the first distance and the second distance, the ratio corresponding to an agility the rotor provides to a rotorcraft.

[0006] The features, functions, and advantages of that have been discussed can be achieved independently in various embodiments or may be combined in yet other embodiments further details of which can be seen with reference to the following description and drawings.

BRIEF DESCRIPTION OF THE DRAWINGS

[0007] FIG. **1** is an example rotorcraft on which an example four-bar flapping rotor can be implemented.

[0008] FIGS. **2**A and **2**B illustrate an example rotor hub of the four-bar flapping rotor of FIG. **1** with an example four-bar linkage.

[0009] FIGS. **3**A, **3**B, and **3**C illustrate the rotor of FIGS. **2**A-**2**B as the four-bar linkage moves the rotor blade between an example neutral position, an example raised position, and an example lowered position.

[0010] FIG. **4** is a side view of an example rotor with an example four-bar linkage where a hub spacing is equal to a pitch housing spacing.

[0011] FIG. **5** is a side view of an example rotor with an example four-bar linkage where a hub spacing is smaller than a pitch housing spacing.

[0012] FIG. **6** is a flowchart describing an example method of forming a flapping rotor.

[0013] In general, the same reference numbers will be used throughout the drawing(s) and accompanying written description to refer to the same or like parts. The figures are not necessarily to scale.

DETAILED DESCRIPTION

[0014] Rotor design balances the weight of the rotor with the response of the rotor to control commands. Known rigid rotors provide a rapid response to maneuvering controls as all reaction forces and moments from the rotor blades are transferred directly to the hub and consequently to the rotorcraft. However, known rigid rotors require a large, heavy hub and commensurately large and heavy support hardware to withstand the forces and moments. The extra weight of the system using known rigid rotors increases fuel consumption and lowers the overall payload capacity. Alternatively, known fully articulated rotors allow a rotor blade to rotate freely, which greatly reduces the moments transferred to the hub as reaction forces instead cause the blade to flap or otherwise rotate relative to the hub. As such, response times to maneuvering controls are longer as roll and pitch moments introduced into the rotorcraft are reduced. A known fully articulated rotor can utilize a smaller hub and supporting hardware, which results in weight reduction. In many rotorcraft, a known fully articulated rotor design is used when payload capacity is prioritized, and control response rate is less important.

[0015] Known fully articulated rotors have issues with vibrations caused by lead-lag rotation of rotor blades. When a rotor blade is pitched or otherwise subjected to control inputs, the change in lift forces on the rotor blade cause the rotor blade to flap (e.g., rotate in the flap direction). The rotor blade rotates around a flapping hinge which, in turn, causes

the center of gravity of the rotor blade to rotate. As the center of gravity of the rotor blade rotates around the flapping hinge, the center of gravity moves closer or further from the axis of rotation of the hub. Conservation of rotational inertia causes the rotational speed of the rotor blade to increase as the center of gravity approaches the axis of rotation and decrease as the center of gravity moves away from the axis of rotation. Thus, the changing rotational speed of the rotor blade causes a cyclic rotation in the lead-lag direction which, in turn, causes lead lag vibration. Known fully articulated rotors incorporate a damper to control lead-lag vibrations.

[0016] Example rotors described herein limit the lead lag vibration by utilizing four-bar linkages to enable a flapping motion of the rotor blades. Example four-bar linkages described herein allow the center of gravity of the rotor to move in a substantially axial direction relative to the axis of rotation of the rotor. Additionally, example four-bar linkages described herein can be designed to define an instantaneous center of rotation for the rotor blade (e.g., a point about which the center of gravity rotates) as it rotates in the flap-wise direction. Thus, the instantaneous center of rotation for the rotor blade can be shifted away from the four-bar linkage and towards the center of gravity. This effectively reduces a radius of rotation for the center of gravity, resulting in a smaller movement of the center of gravity for a given angular deflection and less consequent lead-lag vibration. Example rotors described herein limit lead-lag vibrations, and therefore require smaller and lighter dampers than known rotors.

[0017] FIG. **1** is an example rotorcraft **100** on which an example four-bar flapping rotor **102** can be implemented. The rotorcraft **100** is depicted as a single rotor helicopter, but in other examples the rotorcraft **100** can be any other kind of aircraft with a rotor (e.g., tandem rotor helicopter, tiltrotor aircraft, etc.). The rotor **102** is coupled to the rotorcraft **100** at an example location of an example fuselage **104**. In other examples, the rotor **102** can be coupled to a different location. In some examples, multiple rotors **102** are coupled to the rotorcraft **100** at different positions on the fuselage **104**. The rotor **102** includes an example rotor hub **106**, discussed in further detail in reference to FIGS. **2**A-**2**B, coupled to an example mast **108**. The mast **108** couples to an example engine to rotate the rotor **102** about an example axis of rotation **109**. Example rotor blades **110** couple to the rotor hub **106**. FIG. **1** shows the rotor **102** with three rotor blades **110** coupled to the rotor hub **106**. In other examples, the rotor **102** can have a different number of rotor blades **110** (e.g., two rotor blades, four rotor blades, etc.).

[0018] FIGS. **2**A and **2**B illustrate an example rotor hub **106** of the four-bar flapping rotor **102** of FIG. **1** with an example four-bar linkage **200**. FIG. **2**A is a side view of the example rotor hub **106** and the four-bar linkage **200**. For clarity, a number of known components (e.g., a lead-lag damper, swash plate, pitch control rods, etc.) have been removed from the depiction of the rotor **102**. However, it should be understood that such components can be present in any embodiment of the rotor **102**. The rotor **102** includes a four-bar linkage **200** for each rotor blade **110**, as discussed below in relation to FIG. **2**B. The four-bar linkage **200** couples an example pitch housing **202** to the rotor hub **106**. The rotor blade **110** is coupled to the pitch housing **202**, opposite the four-bar linkage **200**. The four-bar linkage **200** enables flap-wise rotation (e.g., rotation within a plane that includes the axis of rotation **109** of the rotor **102**) of the rotor blade **110**. An example lead-lag hinge **204** (e.g., vertical hinge, drag hinge, etc.) located in the pitch housing **202** enables lead-lag rotation (e.g., rotation within a plane that is substantially perpendicular to the axis of rotation **109** of the rotor **102**) of the rotor blade **110**. The pitch housing **202** rotates to allow a pitch (e.g., angle of attack) of the rotor blade **110** to change in response to control commands. In this way, the rotor **102** enables all the rotor blade motions of a known fully articulated rotor.

[0019] The four-bar linkage **200** of FIG. **2**A includes an example first link **206** (e.g., first link bar, upper link, etc.) and an example second link **208** (e.g., second link bar, lower link, etc.). The first link **206** and second link **208** have an example geometry (e.g., size, shape, length, profile, etc.). Other example links **206**, **208** can have different geometries. FIG. **2**A illustrates the first link **206** and the second link **208** as having similar lengths (e.g., geometries). In other examples, the first link **206** can be longer or shorter than the second link **208**. In some examples, the first link **206**, the second link **208**, the pitch housing **202**, and the rotor blade **110** form an assembly (e.g., a blade assembly) to easily mount to the rotor hub **106**. Multiple assemblies can be prepared and coupled to the rotor hub **106** such that each assembly is identical and radially symmetrically positioned about the axis of rotation **109**.

[0020] The first link **206** is rotationally coupled to the rotor hub **106** at an example first point **210**. The second link **208** is rotationally coupled to the rotor hub **106** at an example second point **212**. In this way, the rotor hub **106** forms a link (e.g., a ground link) of the four-bar linkage **200** with a length (e.g., a hub spacing) equal to a distance between the first point **210** and the second point **212**. In some examples, the first point **210** and the second point **212** are on a ground link, and the ground link is fixedly coupled to the rotor hub **106**. FIG. **2**A illustrates an example distance between (e.g., spacing of) the first point **210** and the second point **212**. In other examples, the first point **210** and the second point **212** can be spaced apart at a different distance (e.g., longer or shorter). The first point **210** is located on or near a top side (e.g., a top end, an upper end, a higher point of, etc.) of the rotor hub **106**. The second point **212** is located on or near a bottom side (e.g., a bottom end, a lower end, a lower point of, etc.) of the rotor hub **106**. The first point **210** and the second point **212** are equidistant to the axis of rotation **109**. In other examples, the first point **210** and the second point **212** can have different positions relative to the rotor hub **106** and/or the axis of rotation **109** (e.g., not equidistant to the axis of rotation **109**).

[0021] The first link **206** is rotationally coupled to the pitch housing **202** at an example third point **214**. The second link **208** is rotationally coupled to the pitch housing **202** at an example fourth point **216**. In this way, the pitch housing **202** forms a link (e.g., a coupler link) of the four-bar linkage **200** with a length (e.g., pitch housing spacing) equal to a distance between the third point **214** and the fourth point **216**. FIG. **2**A illustrates an example distance between (e.g., spacing of) the third point **214** and the fourth point **216**. In other examples, the third point **214** and the fourth point **216** can be spaced apart at a different distance (e.g., longer or shorter). The third point **214** is located on or near a top side (e.g., a top end, an upper end, a higher point of, etc.) of the pitch housing **202**, opposite from the rotor blade **110** relative to the lead-lag hinge **204**. The fourth point **216** is located on or near a bottom side (e.g., a bottom end, a lower end, a

lower point of, etc.) of the pitch housing **202**, opposite from the rotor blade **110** relative to the lead-lag hinge **204**. The third point **214** and the fourth point **216** are equidistant to the lead-lag hinge **204**. In other examples, the third point **214** and the fourth point **216** can have different positions relative to the pitch housing **202** and/or the lead-lag hinge **204** (e.g., not equidistant to the lead-lag hinge **204**).

[0022] FIG. **2**B is a perspective view of the rotor **102** showing the four-bar linkage **200** and four-bar linkages **200** that connect to the example rotor blades **110** (as shown in FIG. **1**). FIG. **2**B illustrates an example four-bar linkage **200** that includes an example third link **218** and an example fourth link **220** (shown hidden behind the pitch housing **202**) parallel to the first link **206** and the second link **208**. The third link **218** and fourth link **220** are rotationally coupled to an opposite side of the rotor hub **106** and the pitch housing **202**. The third link **218** shares a first axis of rotation (e.g., an axis including the first point **210**) and a second axis of rotation (e.g., an axis including the third point **214**) with the first link **206**. The fourth link **220** shares a third axis of rotation (e.g., an axis including the second point **212**) and a fourth axis of rotation (e.g., an axis including the fourth point **216**) with the second link **208**. In this way, the first link **206**, the second link **208**, the third link **218**, and the fourth link **220** share the loads generated by the rotor blade **110** while maintaining the motion defined by the four-bar linkage.

[0023] Returning to FIG. **2**A, the first point **210**, the second point **212**, the third point **214**, and the fourth point **216** define the kinematics of the four-bar linkage **200**. In other words, the motion of the four-bar linkage **200** and resulting range of motion of the rotor blade **110** depend on the distance between the first point **210** and the second point **212** (e.g., a length of the ground link, a link spacing of the rotor hub **106**, a hub spacing, etc.), the distance between the second point **212** and the fourth point **216** (e.g., a length of the second link **208**), the distance between the fourth point **216** and the third point **214** (e.g., a length of the coupler link, a link spacing of the pitch housing **202**, a pitch housing spacing, etc.), and the distance between the third point **214** and the first point **210** (e.g., a length of the first link **206**). As discussed in further detail in reference to FIGS. **3**A-**5**, the relative distances of the first point **210**, the second point **212**, the third point **214**, and the fourth point **216** affect the kinematics of rotor **102**, the response of the rotor **102** to control commands, as well as the magnitude of the moments and forces transferred to the rotor hub **106**.

[0024] FIGS. **3**A, **3**B, and **3**C illustrate the rotor **102** of FIG. **2**A as the four-bar linkage **200** moves the rotor blade **110** between an example neutral position **300**, an example raised position **302**, and an example lowered position **304**. The raised position **302** and lowered position **304** are examples of positions above and below the neutral position **300**. The rotor blade **110** can move continuously between positions, and the raised position **302** and lowered position **304** can be different (e.g., higher or lower) in other examples. FIGS. **3**A-**3**C demonstrate the movement of an example center of mass **306***a* of the rotor blade **110** about an example instant center of rotation **308** of the rotor blade **110**. The instant center of rotation **308** can be determined by the intersection of an example first line **310** (containing first point **210** and third point **214**) and an example second line **312** (containing second point **212** and fourth point **216**). By way of comparison, FIGS. **3**A-**3**C include a center of rotation **314** corresponding to a known flapping hinge and corresponding example center of mass **306***b* of the rotor blade **110**. In this way, the motion of the centers of mass **306***a*, **306***b* can easily be compared at similar angular displacements (e.g., similar rotations) about the instant center of rotation **308** and the center of rotation **314**. The centers of mass **306***a*, **306***b* are illustrative only and show approximately the same point of the rotor blade **110** as the rotor blade **110** rotates. The centers of mass **306***a*, **306***b* can have different locations on the rotor blade **110**, depending on the full geometry of the rotor blade **110**.

[0025] FIG. **3**A illustrates the rotor **102** as the rotor blade **110** is in the neutral position **300**. The positions of the centers of mass **306***a*, **306***b* are the same for the instant center of rotation **308** of the linkage **200** and the center of rotation **314** of the known flapping hinge. In other words, the centers of mass **306***a*, **306***b* are the same distance from the axis of rotation **109**. Thus, the rotor blade **110** has the same rotational inertia for the linkage **200** and the known flapping hinge while in the neutral position **300**.

[0026] FIG. **3**B illustrates the rotor **102** as the rotor blade **110** is in the raised position **302**. The instant center of rotation **308** has moved below the rotor blade **110**, resulting in an example angular displacement **316** between the instant center of rotation **308** and the center of mass **306***a*. A similar example angular displacement **318** is shown between the center of rotation **314** of the known flapping hinge and the center of mass **306***b*. The angular displacements **316**, **318** result from similar reaction forces to a control input (e.g., pitch command) given to the rotor blade **110**. The angular displacements **316**, **318** coincide with the centers of mass **306***a*, **306***b* moving closer to the axis of rotation **109**. As such, the centers of mass **306***a*, **306***b* increase rotational velocity (e.g., rotate in the lead-lag direction) relative to the axis of rotation **109** to conserve rotational momentum. The center of mass **306***b* is closer to the axis of rotation **109** than the center of mass **306***a*. In other words, the radial displacement of the center of mass **306***a* is less than the radial displacement of the center of mass **306***b*. Thus, the change in rotational velocity and the resultant magnitude of lead-lag rotation is greater in rotors with known flapping hinges than the rotor **102** with the four-bar linkage **200**. Similarly, the reduced lead-lag rotation induced by the four-bar linkage **200** results in a reduction of lead-lag vibrations that the rotor **102** would impart to the rotorcraft **100** (not shown).

[0027] FIG. **3**C illustrates the rotor **102** as the rotor blade **110** is in the lowered position **304**. The instant center of rotation **308** has moved above the rotor blade **110**, resulting in the angular displacement **316** between the instant center of rotation **308** and the center of mass **306***a*. The corresponding angular displacement **318** between the center of rotation **314** of the known flapping hinge and the center of mass **306***b* is likewise shown. The center of mass **306***b* is closer to the axis of rotation **109** than the center of mass **306***a*. As described above in relation to FIG. **3**B, the four-bar linkage **200** thus reduces lead-lag vibrations by limiting radial displacement of the center of mass **306***a* in both a positive and negative flap direction.

[0028] FIGS. **3**A-**3**C further demonstrate that a total movement of the rotor blade **110**, and correspondingly the center of mass **306***a*, can be reduced with a four-bar linkage **200** when compared to a known flapping hinge. This reduced movement reduces vibrations transferred from the rotor **102** to the rotorcraft **100**. Additionally, the four-bar

linkage **200** allows greater moments and forces to be transferred to the rotor **102** and the rotorcraft **100** as compared to a known flapping hinge. Thus, the rotor **102** allows the rotor blade **110** to move in the flap-wise direction with better response than a known fully articulated rotor. Further, the rotor **102**, given the flap-wise degree of freedom, reduces stress transferred from the rotor blade **110** to the rotor hub **106** when compared to a known rigid rotor. Thus, the rotor **102** improves the response (e.g., agility) of the rotorcraft **100** while reducing the size and weight of the rotor hub **106** when compared to known flapping rotors (e.g., fully articulated rotors).

[0029] FIG. **4** is a side view of an example rotor **400** with an example four-bar linkage **402** where a hub spacing (e.g., a distance between an example first point **404** and an example second point **406** on an example rotor hub **407**) is equal to a pitch housing spacing (e.g., a distance between an example third point **408** and an example fourth point **410** on an example pitch housing **411**). In this example, an example rotor blade **412** can translate relative to an example axis of rotation **414** as the four-bar linkage **402** rotates, but it does not rotate in the flap-wise direction (e.g., rotate in a plane containing the axis of rotation **414**). When the rotor blade **412** experiences loading due to control commands, the rotor blade **412** translates resulting in a movement parallel to the axis of rotation **414** and a smaller movement perpendicularly to the axis of rotation **414**. In this way, the reaction forces from control commands are split between translating the rotor blade **412** and bending the rotor blade **412**. Translation of the rotor blade **412** parallel to the axis of rotation **414** reduces the radial movement of the rotor blade **412**, which in turn reduces the lead-lag motion of the rotor blade **412** and the resultant lead-lag vibration. In addition to enabling translation of the rotor blade **412**, the four-bar linkage **402** distributes flap-wise moments from the rotor blade **412** between an example first link **416** and an example second link **418**, which reduces the amount of material and weight required in the rotor **400** while maintaining similar response (e.g., agility) as compared to known rigid rotors.

[0030] FIG. **5** is a side view of an example rotor **500** with an example four-bar linkage **502** where a hub spacing (e.g., a distance between an example first point **504** and an example second point **506**, on an example rotor hub **507**) is smaller than a pitch housing spacing (e.g., a distance between an example third point **508** and an example fourth point **510** on an example pitch housing **511**). An example instant center of rotation **512** of an example rotor blade **514** is located opposite an example axis of rotation **516** from the rotor blade **514**, creating a negative hinge offset for the rotor blade **514**. The instant center of rotation **512** is determined by the intersection of an example first line **518** (the first line **518** including the first point **504** and the third point **508** of an example first link **520**) and an example second line **522** (the second line **522** including the second point **506** and the fourth point **510** of an example second link **524**). As the instant center of rotation **512** is further from the rotor blade **514** than a known flapping hinge center of rotation, the movement of the rotor blade **514** and the center of mass of the rotor blade **514** is amplified for a given angular displacement in the flap-wise direction when compared to a known flapping hinge. The negative hinge offset of the rotor blade **514** impacts the stability and dynamics of the rotor **500** based on how far away from the axis of rotation **516** the instant center of rotation **512** is located. Different example four-bar linkages **502** (e.g., with different relative positions of first point **504**, second point **506**, third point **508**, and fourth point **510**) have faster or slower responses corresponding to the distance between the instant center of rotation **512** and the axis of rotation **516**.

[0031] FIG. **6** is a flowchart describing an example method **600** of forming an example flapping rotor. The method **600** begins at block **602**, at which a ratio of a first distance (e.g., a pitch housing spacing) and a second distance (e.g., a hub spacing) is defined. In this example, the first distance is defined by a distance between a connection point (e.g., third points **214**, **408**, **508**) of a first link (e.g., first links **206**, **416**, **520**) with a pitch housing (e.g., pitch housing **202**, **411**, **511**) and a second connection point (e.g., fourth points **216**, **410**, **510**) of a second link (e.g., second links **208**, **418**, **524**) with the pitch housing. The second distance is defined by a distance between a connection point (e.g., first points **210**, **404**, **504**) of the first link with a rotor hub (e.g., rotor hubs **106**, **407**, **507**) and a second connection point (e.g., second points **212**, **406**, **506**) of the second link with the rotor hub. Thus, the ratio of the first distance to the second distance characterizes kinematics of an example four-bar linkage (e.g., linkages **200**, **402**, **502**). An example ratio can be defined as less than one, meaning that the pitch housing spacing is less than (e.g., smaller than) the hub spacing, such as the four-bar linkage **200** described in relation to FIGS. **2**A-**3**C. A ratio less than one corresponds to a rotor with greater agility than a known flapping rotor of similar size and weight. An example ratio can be defined as equal to one, meaning that the pitch housing spacing is equal to the hub spacing, such as the four-bar linkage **402** described in relation to FIG. **4**. A ratio of one corresponds to a rotor with similar agility to a known rigid rotor. An example ratio can be defined as greater than one, meaning that pitch housing spacing is greater than (e.g., larger than) the hub spacing, such as the four-bar linkage **502** described in relation to FIG. **5**. A ratio greater than one places an instant center of rotation (e.g., the instant center of rotation **512**) on an inboard side of the four-bar linkage. In some examples, the ratio greater than one corresponds to an instant center of rotation that is between an axis of rotation of the hub and the four-bar linkage, which results in a rotor with less agility than a known rotor with known flapping rotor hubs. In some examples, the ratio greater than one corresponds to the instant center of rotation located on or near the axis of rotation of the hub, which produces rotor dynamics similar to a known teetering hub. In other examples, the ratio greater than one corresponds to the instant center of rotation that is located opposite the four-bar linkage relative to the axis of rotation of the hub, as shown in FIG. **5**. When the instant center of rotation is located opposite the four-bar linkage from the axis of rotation, the four-bar linkage creates a negative hinge offset that alters rotor stability and dynamics. Thus, by defining the ratio of the first distance and the second distance, the agility of the rotor including the example flapping rotor hub is likewise defined.

[0032] The example method **600** continues to block **604**, where a rotor blade (e.g., rotor blades **110**, **412**, **514**) is coupled to the pitch housing. In some examples, the rotor blade is rotationally coupled to the pitch housing to allow for rotation in the lead-lag direction (e.g., rotation in a plane substantially perpendicular to an axis of rotation of the rotor hub). The motion of rotor blade is otherwise controlled by

the motion of the pitch housing. The method **600** continues to block **606** where the pitch housing is rotatably coupled to the first link and the second link, spaced apart at the first distance. The first link is coupled to the first connection point of the pitch housing and the second link is coupled to the second connection point of the pitch housing. The method **600** continues to block **608** where the first link and the second link are rotatably coupled to the rotor hub, spaced apart at the second distance. The first link is coupled to the first connection point of the rotor hub and the second link is coupled to the second connection point of the rotor hub. Thus, a flapping rotor hub is formed with a ratio equal to the ratio defined in block **602**, and the method **600** ends.

[0033] "Including" and "comprising" (and all forms and tenses thereof) are used herein to be open ended terms. Thus, whenever a claim employs any form of "include" or "comprise" (e.g., comprises, includes, comprising, including, having, etc.) as a preamble or within a claim recitation of any kind, it is to be understood that additional elements, terms, etc., may be present without falling outside the scope of the corresponding claim or recitation. As used herein, when the phrase "at least" is used as the transition term in, for example, a preamble of a claim, it is open-ended in the same manner as the term "comprising" and "including" are open ended. The term "and/or" when used, for example, in a form such as A, B, and/or C refers to any combination or subset of A, B, C such as (1) A alone, (2) B alone, (3) C alone, (4) A with B, (5) A with C, (6) B with C, or (7) A with B and with C. As used herein in the context of describing structures, components, items, objects and/or things, the phrase "at least one of A and B" is intended to refer to implementations including any of (1) at least one A, (2) at least one B, or (3) at least one A and at least one B. Similarly, as used herein in the context of describing structures, components, items, objects and/or things, the phrase "at least one of A or B" is intended to refer to implementations including any of (1) at least one A, (2) at least one B, or (3) at least one A and at least one B. As used herein in the context of describing the performance or execution of processes, instructions, actions, activities, etc., the phrase "at least one of A and B" is intended to refer to implementations including any of (1) at least one A, (2) at least one B, or (3) at least one A and at least one B. Similarly, as used herein in the context of describing the performance or execution of processes, instructions, actions, activities, etc., the phrase "at least one of A or B" is intended to refer to implementations including any of (1) at least one A, (2) at least one B, or (3) at least one A and at least one B.

[0034] As used herein, singular references (e.g., "a", "an", "first", "second", etc.) do not exclude a plurality. The term "a" or "an" object, as used herein, refers to one or more of that object. The terms "a" (or "an"), "one or more", and "at least one" are used interchangeably herein. Furthermore, although individually listed, a plurality of means, elements, or actions may be implemented by, e.g., the same entity or object. Additionally, although individual features may be included in different examples or claims, these may possibly be combined, and the inclusion in different examples or claims does not imply that a combination of features is not feasible and/or advantageous.

[0035] As used herein, unless otherwise stated, the term "above" describes the relationship of two parts relative to Earth. A first part is above a second part, if the second part has at least one part between Earth and the first part. Likewise, as used herein, a first part is "below" a second part when the first part is closer to the Earth than the second part. As noted above, a first part can be above or below a second part with one or more of: other parts therebetween, without other parts therebetween, with the first and second parts touching, or without the first and second parts being in direct contact with one another.

[0036] As used in this patent, stating that any part (e.g., a layer, film, a., region, or plate) is in any way on (e.g., positioned on, located on, disposed on, or formed on, etc.) another part, indicates that the referenced part is either in contact with the other part, or that the referenced part is above the other part with one or more intermediate part(s) located therebetween.

[0037] As used herein, connection references (e.g., attached, coupled, connected, and joined) may include intermediate members between the elements referenced by the connection reference and/or relative movement between those elements unless otherwise indicated. As such, connection references do not necessarily infer that two elements are directly connected and/or in fixed relation to each other. As used herein, stating that any part is in "contact" with another part is defined to mean that there is no intermediate part between the two parts.

[0038] Unless specifically stated otherwise, descriptors such as "first," "second," "third," etc., are used herein without imputing or otherwise indicating any meaning of priority, physical order, arrangement in a list, and/or ordering in any way, but are merely used as labels and/or arbitrary names to distinguish elements for ease of understanding the disclosed examples. In some examples, the descriptor "first" may be used to refer to an element in the detailed description, while the same element may be referred to in a claim with a different descriptor such as "second" or "third." In such instances, it should be understood that such descriptors are used merely for identifying those elements distinctly within the context of the discussion (e.g., within a claim) in which the elements might, for example, otherwise share a same name.

[0039] As used herein, "approximately", "substantially", and "about" modify their subjects/values to recognize the potential presence of variations that occur in real world applications. For example, "approximately", "substantially", and "about" may modify dimensions that may not be exact due to manufacturing tolerances and/or other real world imperfections as will be understood by persons of ordinary skill in the art. For example, "approximately", "substantially", and "about" may indicate such dimensions may be within a tolerance range of +/−10% or +/−3° unless otherwise specified herein.

[0040] As used herein, the terms "response" and "agility" refer to a speed and/or accuracy with which a rotorcraft changes attitude and/or velocity in response to a control command (e.g., a rotor pitch command, a movement of a swashplate, etc.). In other words, the terms "response" and "agility" refer to how efficiently a rotor blade transfers reaction forces resulting from a change in rotor blade pitch to a body of the rotor craft. Thus, a good (e.g., a quick) response results in an efficient transfer of reaction forces to the body of the rotorcraft, which is also described as good (e.g., high) agility. In contrast, a poor (e.g., slow) response results in an inefficient transfer of reaction forces to the body of the rotorcraft, which is also described as poor (e.g., low) agility.

[0041] Example methods, apparatus, systems, and articles of manufacture of flapping four-bar rotors for aircraft are disclosed herein. Further examples and combinations thereof include the following: Example 1 includes a flapping rotor hub comprising a rotor hub having a first end and a second end, the first end opposite the second end along an axis of rotation of the rotor hub, a first link rotatably coupled to the rotor hub at the first end, the first link to rotate in a plane parallel to the axis of rotation, a second link rotatably coupled to the rotor hub at the second end, the second link to rotate in the plane, and a pitch housing rotatably coupled to the first link at a third end of the pitch housing, the pitch housing rotatably coupled to the second link at a fourth end of the pitch housing, the third end different than the fourth end, the pitch housing to rotate and translate in the plane, the pitch housing to receive a rotor blade.

[0042] Example 2 includes the rotor hub of example 1, wherein a distance between the third end and the fourth end is greater than a distance between the first end and the second end.

[0043] Example 3 includes the rotor hub of example 1, wherein a distance between the third end and the fourth end is less than a distance between the first end and the second end.

[0044] Example 4 includes the rotor hub of example 1, wherein a distance between the third end and the fourth end is equal to a distance between the first end and the second end.

[0045] Example 5 includes the rotor hub of example 1, wherein a distance between the first end and the third end is larger than a distance between the second end and the fourth end.

[0046] Example 6 includes the rotor hub of example 1, wherein a distance between the first end and the third end is smaller than a distance between the second end and the fourth end.

[0047] Example 7 includes the rotor hub of example 1, wherein a distance between the first end and the third end is equal to a distance between the second end and the fourth end.

[0048] Example 8 includes the rotor hub of example 1, wherein the rotor blade is rotatably coupled to the pitch housing, the rotor blade to rotate in a lead-lag direction.

[0049] Example 9 includes the rotor hub of example 1, wherein the first link and the second link are coupled to a first side of the pitch housing and the rotor hub further includes a third link and a fourth link, the third link and the fourth link rotationally coupled to a second side of the pitch housing and the rotor hub, the third link parallel to the first link, the third link sharing a first axis of rotation at the rotor hub and a second axis of rotation at the pitch housing with the first link, the fourth link parallel to the second link, the fourth link sharing a third axis of rotation at the rotor hub and a fourth axis of rotation at the pitch housing with the second link.

[0050] Example 10 includes the rotor hub of example 1, wherein the first link, the second link, and the pitch housing form a first blade assembly, and the rotor hub includes a second blade assembly, the first blade assembly identical to the second blade assembly, the second blade assembly radially symmetrically coupled to the rotor hub about the axis of rotation relative to the first blade assembly.

[0051] Example 11 includes the rotor hub of example 1, wherein the first link, the second link, rotor hub, and the pitch housing form a four-bar linkage, the four-bar linkage dimensioned to cause a center of mass of the rotor blade to move in a substantially axial direction.

[0052] Example 12 includes a rotorcraft comprising a mast having an axis of rotation, a hub coupled to the mast, a rotor blade coupled to the hub and substantially perpendicular to the axis of rotation, and a four-bar linkage coupled to the hub and the rotor blade. The four-bar linkage includes a ground link fixedly coupled to the hub, the ground link having a first end spaced from a second end, the first end and the second end to form a line parallel to the axis of rotation, a first link rotatably coupled to the ground link at the first end, the first link to rotate in a plane parallel to the axis of rotation, a second link rotatably coupled to the ground link at the second end, the second link to rotate in the plane. The rotorcraft further includes a pitch housing having a third end spaced from a fourth end, the pitch housing rotatably coupled to the first link at the third end, the pitch housing rotatably coupled to the second link at the fourth end, the pitch housing to move along the plane, the pitch housing coupled to the rotor blade.

[0053] Example 13 includes the rotorcraft of example 12, wherein a distance between the first end and the second end is equal to a distance between the third end and the fourth end.

[0054] Example 14 includes the rotorcraft of example 12, wherein a distance between the first end and the second end is less than a distance between the third end and the fourth end.

[0055] Example 15 includes the rotorcraft of example 12, wherein a distance between the first end and the second end is greater than a distance between the third end and the fourth end.

[0056] Example 16 includes the rotorcraft of example 12, wherein the four-bar linkage is dimensioned to maintain the rotor blade substantially perpendicular to the axis of rotation as the rotor blade rotates about the axis of rotation.

[0057] Example 17 includes a method of forming a flapping rotor, the method comprising coupling a rotor blade to a pitch housing, rotatably coupling the pitch housing to a first link and a second link, the first link coupled to the pitch housing spaced apart from the second link a first distance, rotatably coupling the first link and the second link to a rotor hub, the first link coupled to the rotor hub spaced apart from the second link a second distance, and defining a ratio of the first distance and the second distance, the ratio corresponding to an agility the rotor provides to a rotorcraft.

[0058] Example 18 includes the method of example 17, wherein the ratio is one.

[0059] Example 19 includes the method of example 17, wherein the ratio is greater than one.

[0060] Example 20 includes the method of example 17, wherein the ratio is less than one.

[0061] The following claims are hereby incorporated into this Detailed Description by this reference. Although certain example systems, apparatus, articles of manufacture, and methods have been disclosed herein, the scope of coverage of this patent is not limited thereto. On the contrary, this patent covers all systems, apparatus, articles of manufacture, and methods fairly falling within the scope of the claims of this patent.

What is claimed is:

1. A flapping rotor hub comprising:

a rotor hub having a first end and a second end, the first end opposite the second end along an axis of rotation of the rotor hub;

a first link rotatably coupled to the rotor hub at the first end, the first link to rotate in a plane parallel to the axis of rotation;

a second link rotatably coupled to the rotor hub at the second end, the second link to rotate in the plane; and

a pitch housing rotatably coupled to the first link at a third end of the pitch housing, the pitch housing rotatably coupled to the second link at a fourth end of the pitch housing, the third end different than the fourth end, the pitch housing to rotate and translate in the plane, the pitch housing to receive a rotor blade.

2. The rotor hub of claim **1**, wherein a distance between the third end and the fourth end is greater than a distance between the first end and the second end.

3. The rotor hub of claim **1**, wherein a distance between the third end and the fourth end is less than a distance between the first end and the second end.

4. The rotor hub of claim **1**, wherein a distance between the third end and the fourth end is equal to a distance between the first end and the second end.

5. The rotor hub of claim **1**, wherein a distance between the first end and the third end is larger than a distance between the second end and the fourth end.

6. The rotor hub of claim **1**, wherein a distance between the first end and the third end is smaller than a distance between the second end and the fourth end.

7. The rotor hub of claim **1**, wherein a distance between the first end and the third end is equal to a distance between the second end and the fourth end.

8. The rotor hub of claim **1**, wherein the rotor blade is rotatably coupled to the pitch housing, the rotor blade to rotate in a lead-lag direction.

9. The rotor hub of claim **1**, wherein the first link and the second link are coupled to a first side of the pitch housing and the rotor hub further includes a third link and a fourth link, the third link and the fourth link rotationally coupled to a second side of the pitch housing and the rotor hub, the third link parallel to the first link, the third link sharing a first axis of rotation at the rotor hub and a second axis of rotation at the pitch housing with the first link, the fourth link parallel to the second link, the fourth link sharing a third axis of rotation at the rotor hub and a fourth axis of rotation at the pitch housing with the second link.

10. The rotor hub of claim **1**, wherein the first link, the second link, and the pitch housing form a first blade assembly, and the rotor hub includes a second blade assembly, the first blade assembly identical to the second blade assembly, the second blade assembly radially symmetrically coupled to the rotor hub about the axis of rotation relative to the first blade assembly.

11. The rotor hub of claim **1**, wherein the first link, the second link, rotor hub, and the pitch housing form a four-bar linkage, the four-bar linkage dimensioned to cause a center of mass of the rotor blade to move in a substantially axial direction.

12. A rotorcraft comprising:

a mast having an axis of rotation;

a hub coupled to the mast;

a rotor blade coupled to the hub and substantially perpendicular to the axis of rotation; and

a four-bar linkage coupled to the hub and the rotor blade, the four-bar linkage including:

a ground link fixedly coupled to the hub, the ground link having a first end spaced from a second end, the first end and the second end to form a line parallel to the axis of rotation;

a first link rotatably coupled to the ground link at the first end, the first link to rotate in a plane parallel to the axis of rotation;

a second link rotatably coupled to the ground link at the second end, the second link to rotate in the plane; and

a pitch housing having a third end spaced from a fourth end, the pitch housing rotatably coupled to the first link at the third end, the pitch housing rotatably coupled to the second link at the fourth end, the pitch housing to move along the plane, the pitch housing coupled to the rotor blade.

13. The rotorcraft of claim **12**, wherein a distance between the first end and the second end is equal to a distance between the third end and the fourth end.

14. The rotorcraft of claim **12**, wherein a distance between the first end and the second end is less than a distance between the third end and the fourth end.

15. The rotorcraft of claim **12**, wherein a distance between the first end and the second end is greater than a distance between the third end and the fourth end.

16. The rotorcraft of claim **12**, wherein the four-bar linkage is dimensioned to maintain the rotor blade substantially perpendicular to the axis of rotation as the rotor blade rotates about the axis of rotation.

17. A method of forming a flapping rotor, the method comprising:

coupling a rotor blade to a pitch housing;

rotatably coupling the pitch housing to a first link and a second link, the first link coupled to the pitch housing spaced apart from the second link a first distance;

rotatably coupling the first link and the second link to a rotor hub, the first link coupled to the rotor hub spaced apart from the second link a second distance; and

defining a ratio of the first distance and the second distance, the ratio corresponding to an agility the rotor provides to a rotorcraft.

18. The method of claim **17**, wherein the ratio is one.

19. The method of claim **17**, wherein the ratio is greater than one.

20. The method of claim **17**, wherein the ratio is less than one.

* * * * *