US 20250282589A1

(19) United States
(12) Patent Application Publication
KISHIDA
(10) Pub. No.: US 2025/0282589 A1
(43) Pub. Date: Sep. 11, 2025

(54) **FORKLIFT TRUCK**

(71) Applicant: **KABUSHIKI KAISHA TOYOTA JIDOSHOKKI**, Kariya-shi (JP)

(72) Inventor: **Hirokazu KISHIDA**, Kariya-shi (JP)

(73) Assignee: **KABUSHIKI KAISHA TOYOTA JIDOSHOKKI**, Kariya-shi (JP)

(21) Appl. No.: **19/062,315**

(22) Filed: **Feb. 25, 2025**

(30) **Foreign Application Priority Data**

Mar. 5, 2024 (JP) 2024-032916

Publication Classification

(51) **Int. Cl.**
B66F 9/075 (2006.01)
B66F 9/06 (2006.01)

(52) **U.S. Cl.**
CPC ***B66F 9/0755*** (2013.01); ***B66F 9/063*** (2013.01)

(57) **ABSTRACT**

A forklift truck includes: a vehicle body; a load handling device; a fork having a load receiving portion for receiving a load and an extending portion extending upward from a proximal end of the load receiving portion; a load detector for detecting the load on the fork; and a controller. The load detector includes: a shaft supported by the fork; an arm configured to come into contact with the load on the fork and swing about the shaft; and an angle detection sensor configured to detect a swing angle of the arm. The controller includes a distance calculation unit. The distance calculation unit is configured to calculate a distance between the load and the extending portion in a longitudinal direction of the load receiving portion based on the swing angle when the load on the fork comes into contact with the arm and the arm swings.

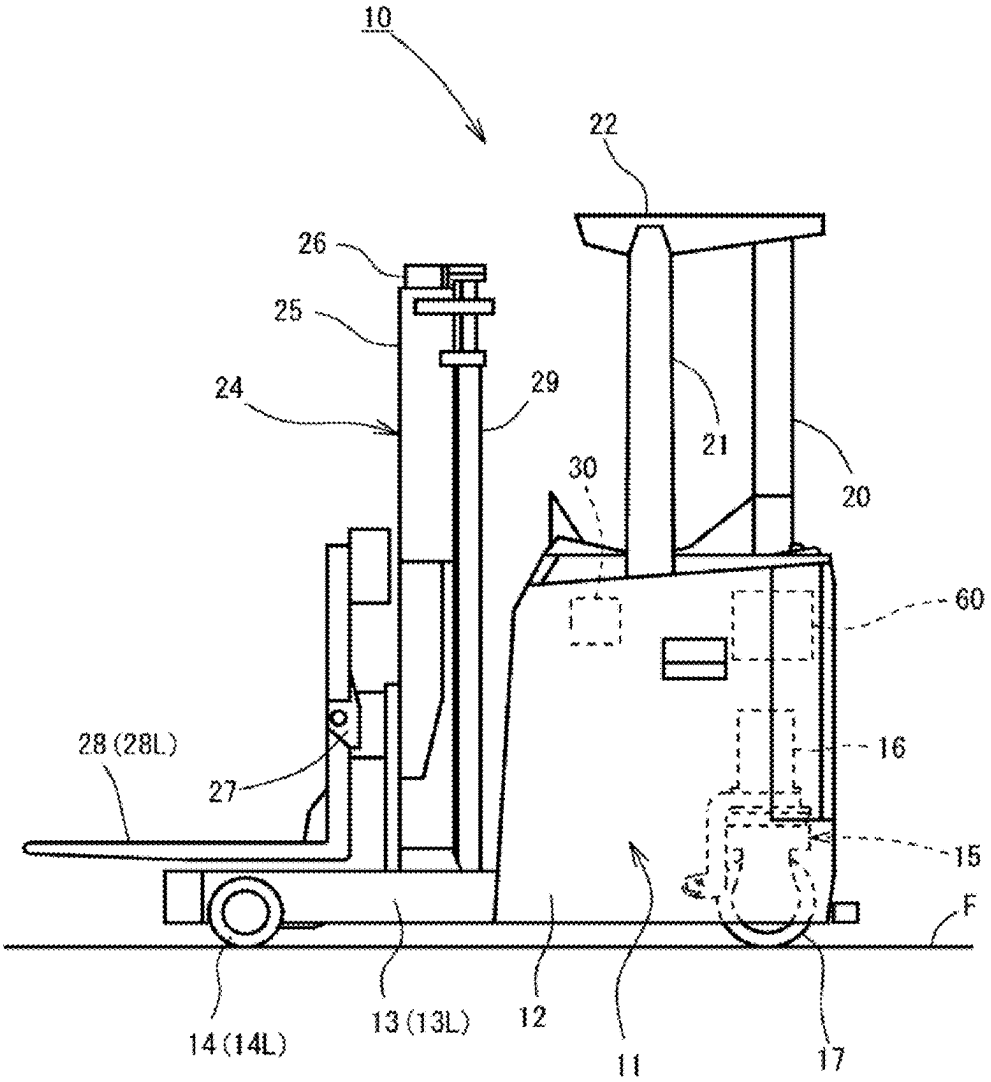

FIG. 1

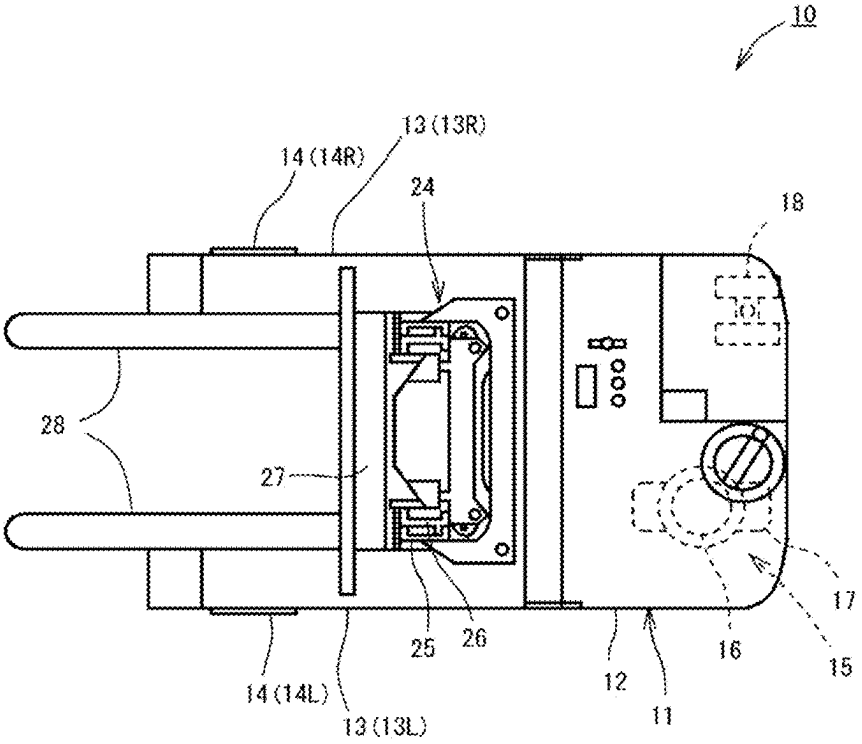

FIG. 2

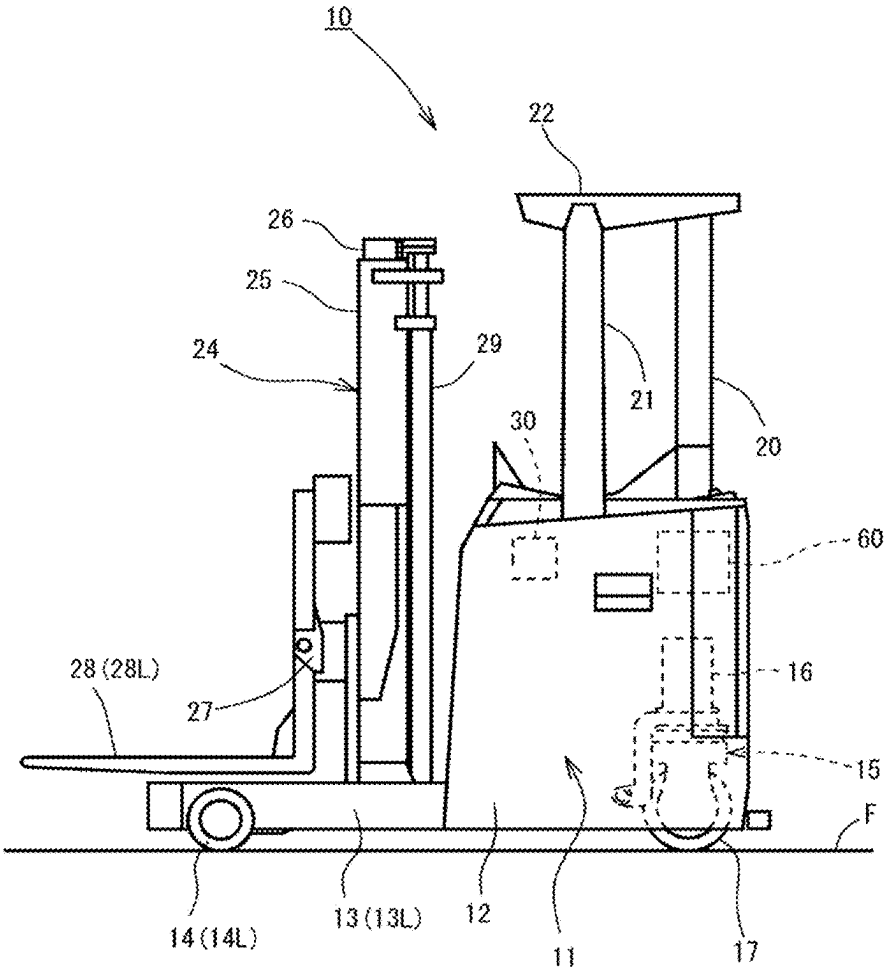

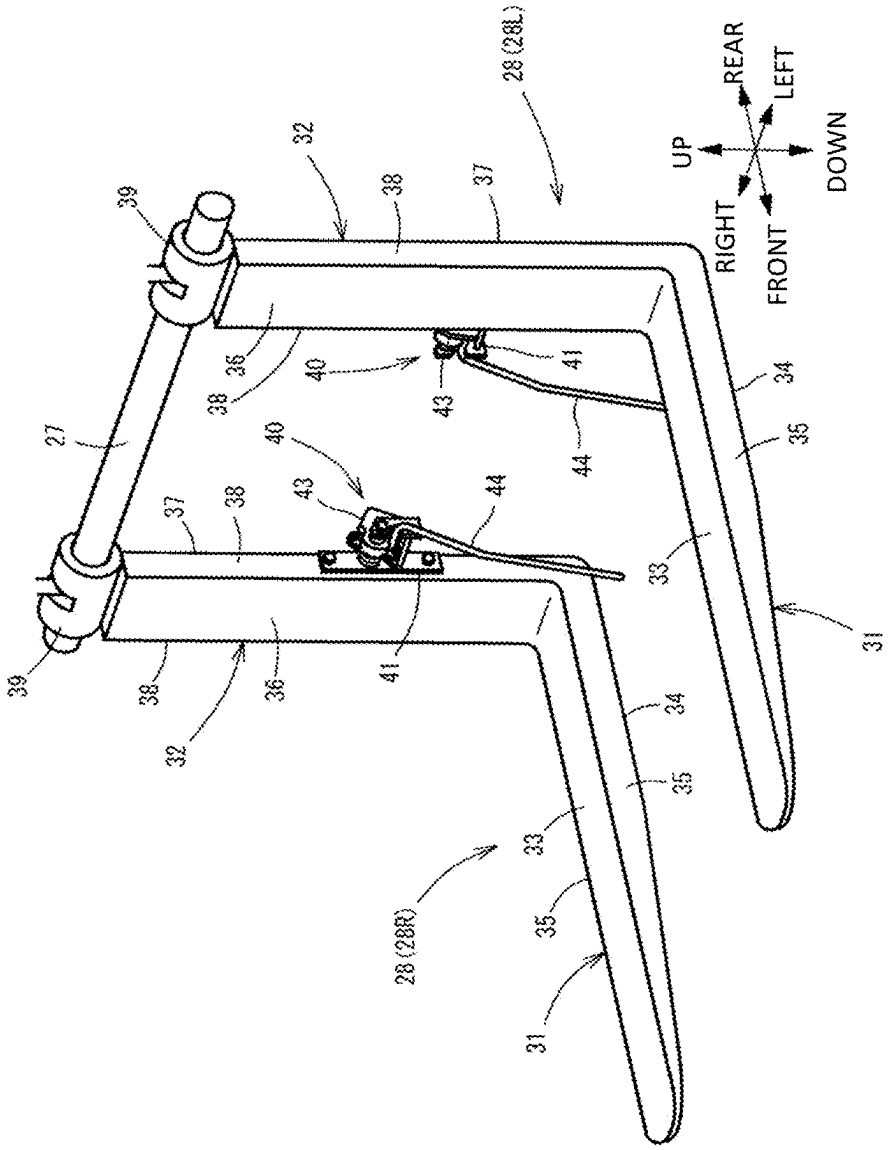
UP
DOWN
REAR
LEFT
RIGHT
FRONT
28 (28L)
28 (28R)
27
31
32
33
34
35
36
37
38
39
40
41
43
44

FIG. 3

FIG. 4

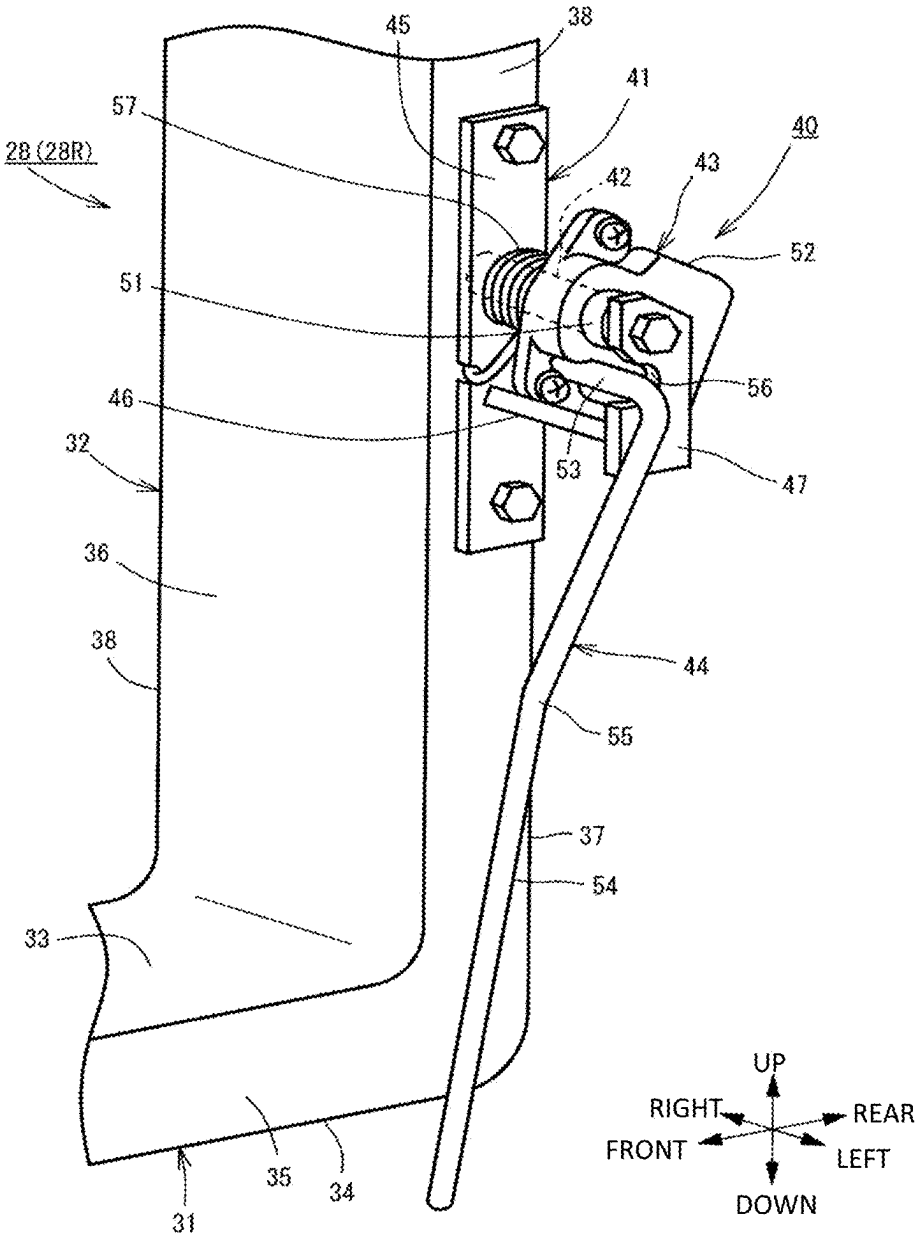
45
38
41
57
40
28 (28R)
42
43
52
51
56
46
53
47
32
36
38
44
55
37
54
33
35
34
31
UP
RIGHT
REAR
FRONT
LEFT
DOWN

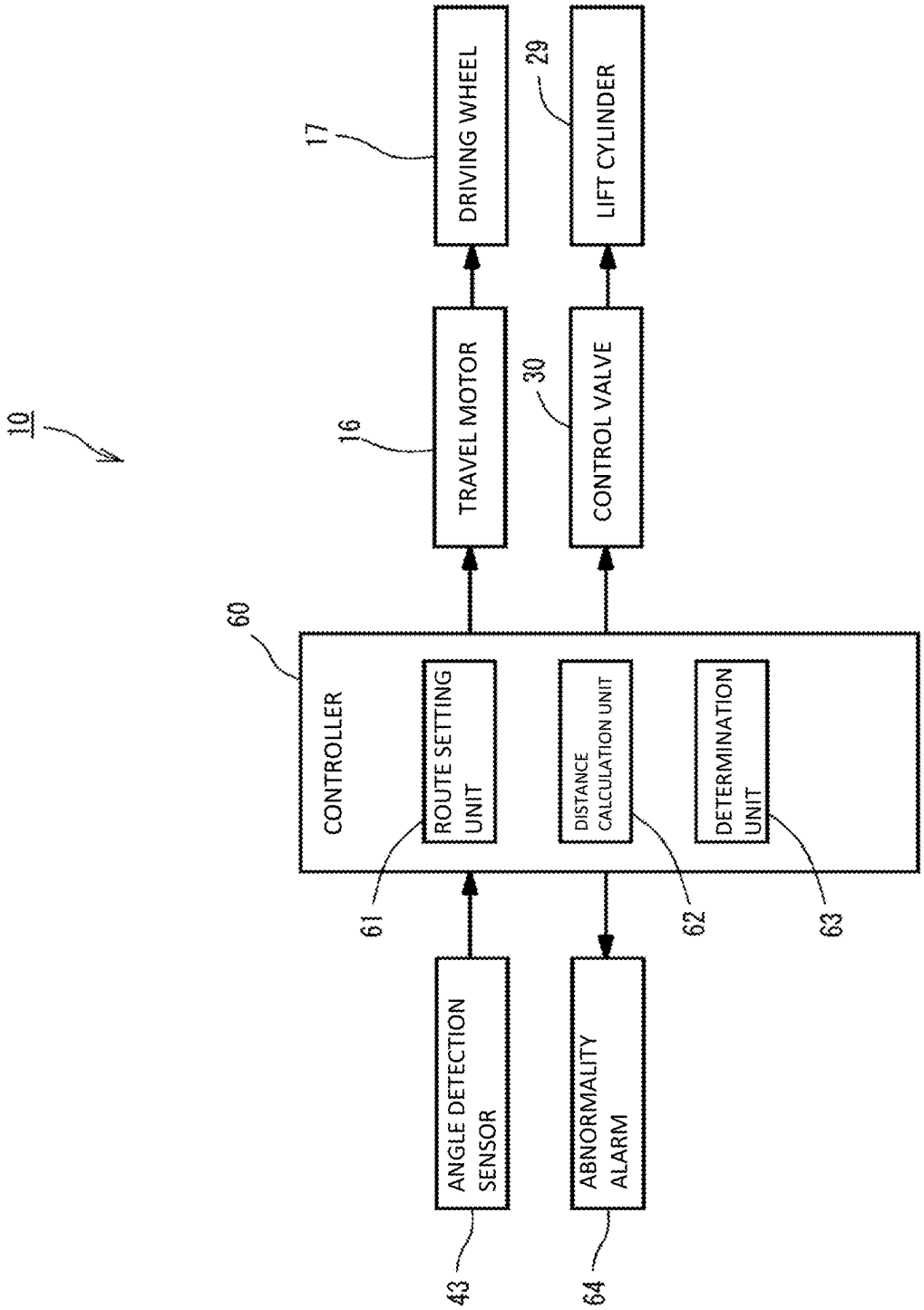
10
60
CONTROLLER
ROUTE SETTING UNIT
DISTANCE CALCULATION UNIT
DETERMINATION UNIT
61
62
63
16
TRAVEL MOTOR
17
DRIVING WHEEL
30
CONTROL VALVE
29
LIFT CYLINDER
43
ANGLE DETECTION SENSOR
64
ABNORMALITY ALARM

FIG. 5

FIG. 6

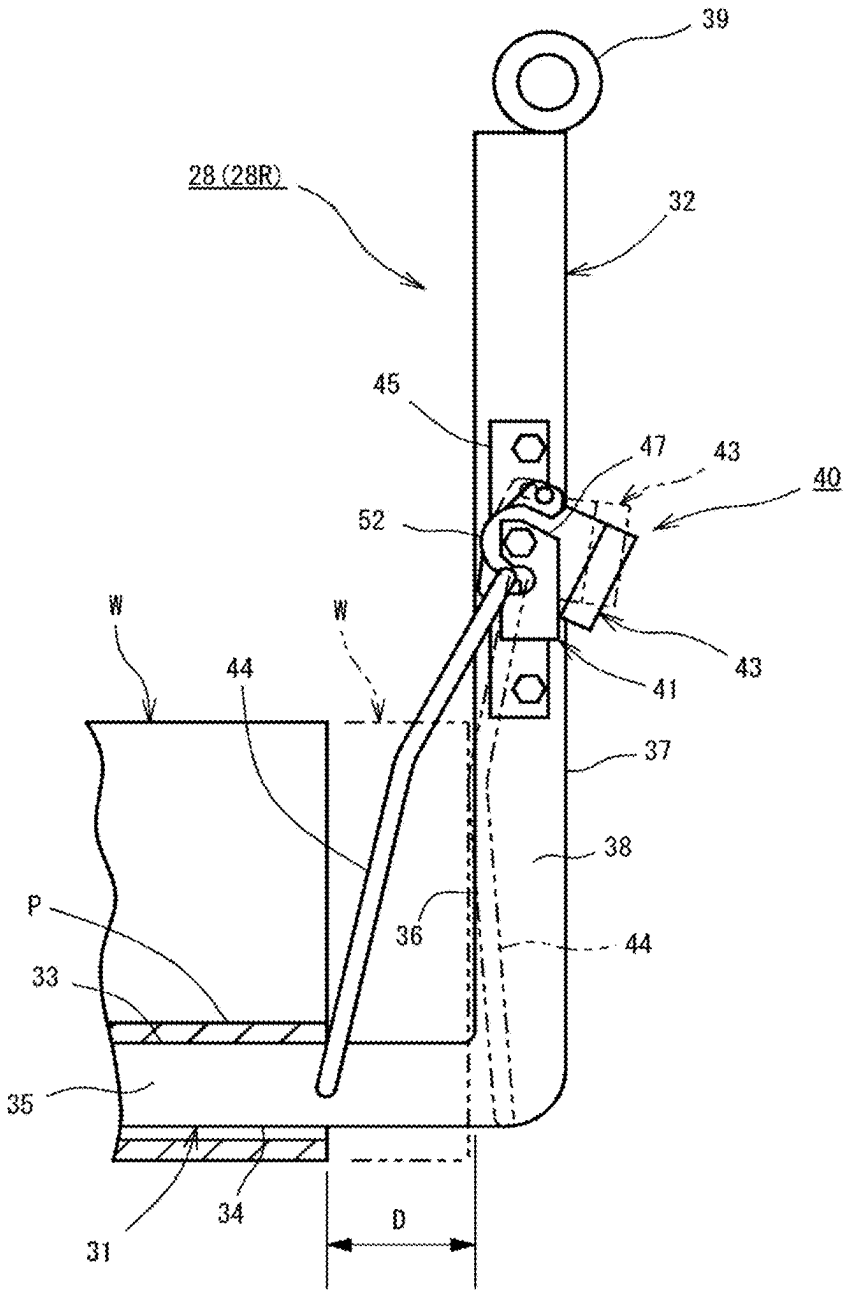

FIG. 7

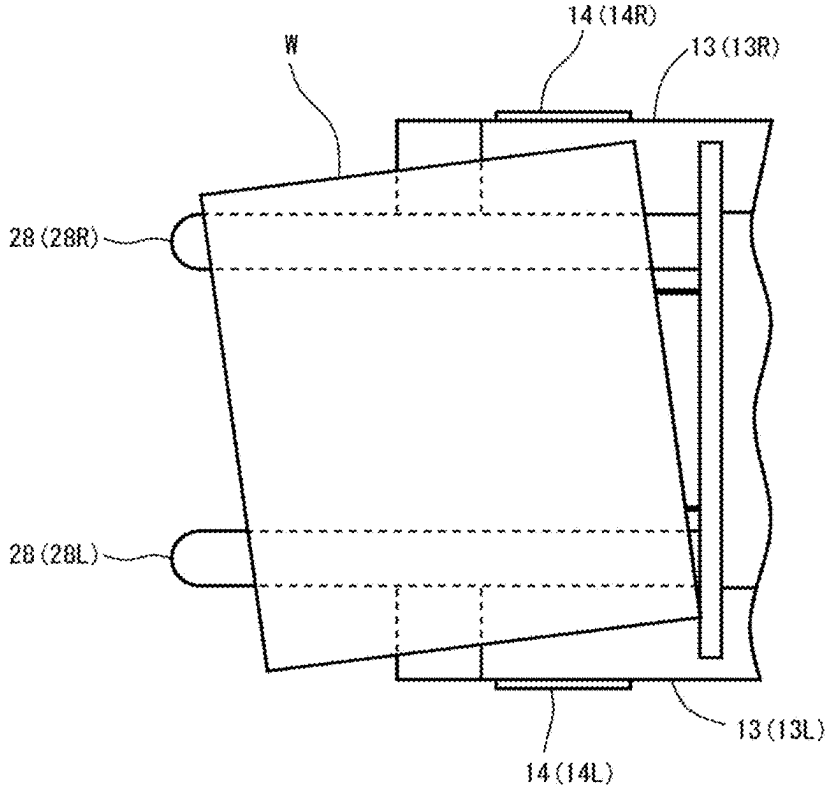

FIG. 8

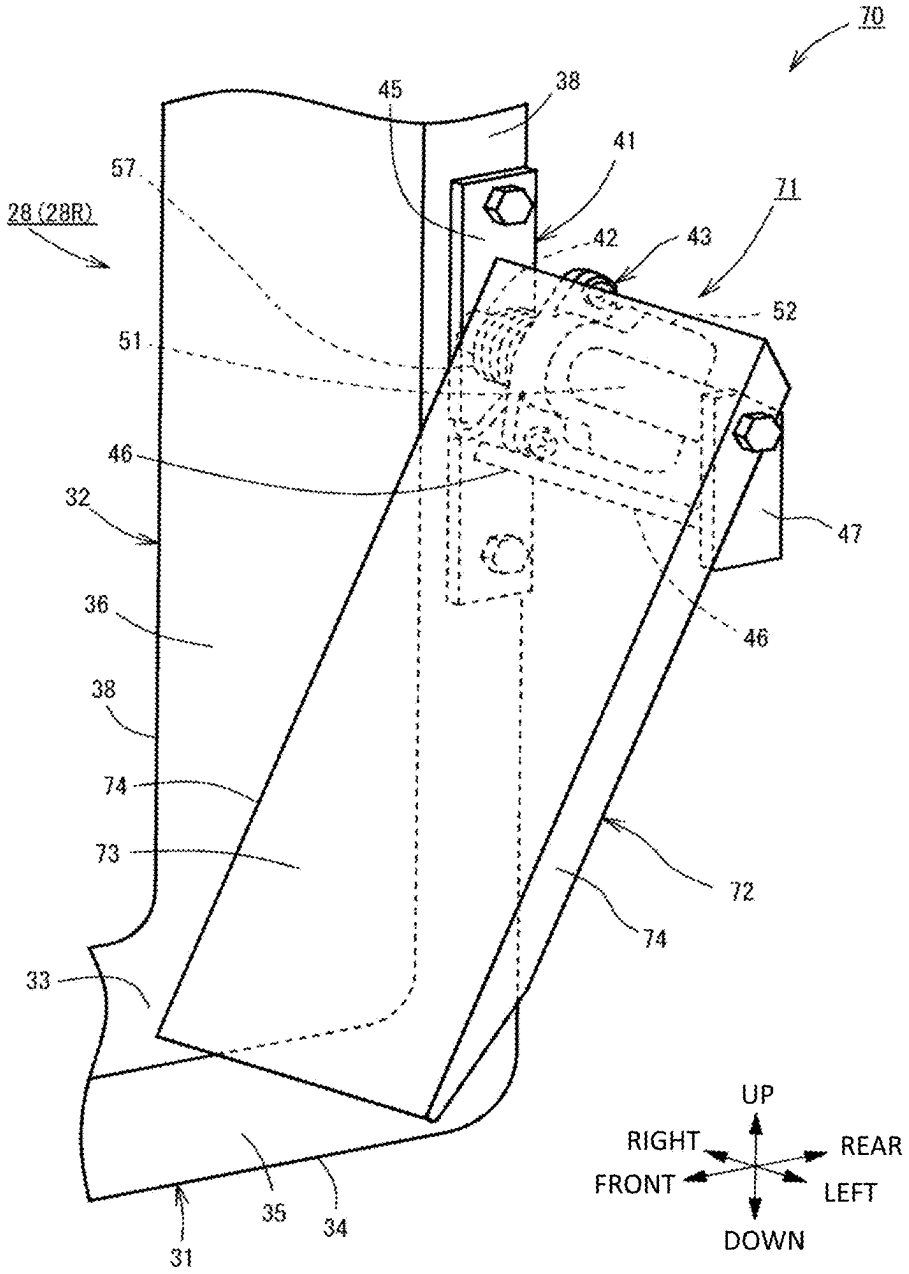
70
45
38
41
57
71
28 (28R)
42
43
52
51
46
32
47
36
46
38
74
73
72
74
33
UP
RIGHT
REAR
FRONT
LEFT
DOWN
35
34
31

FIG. 9

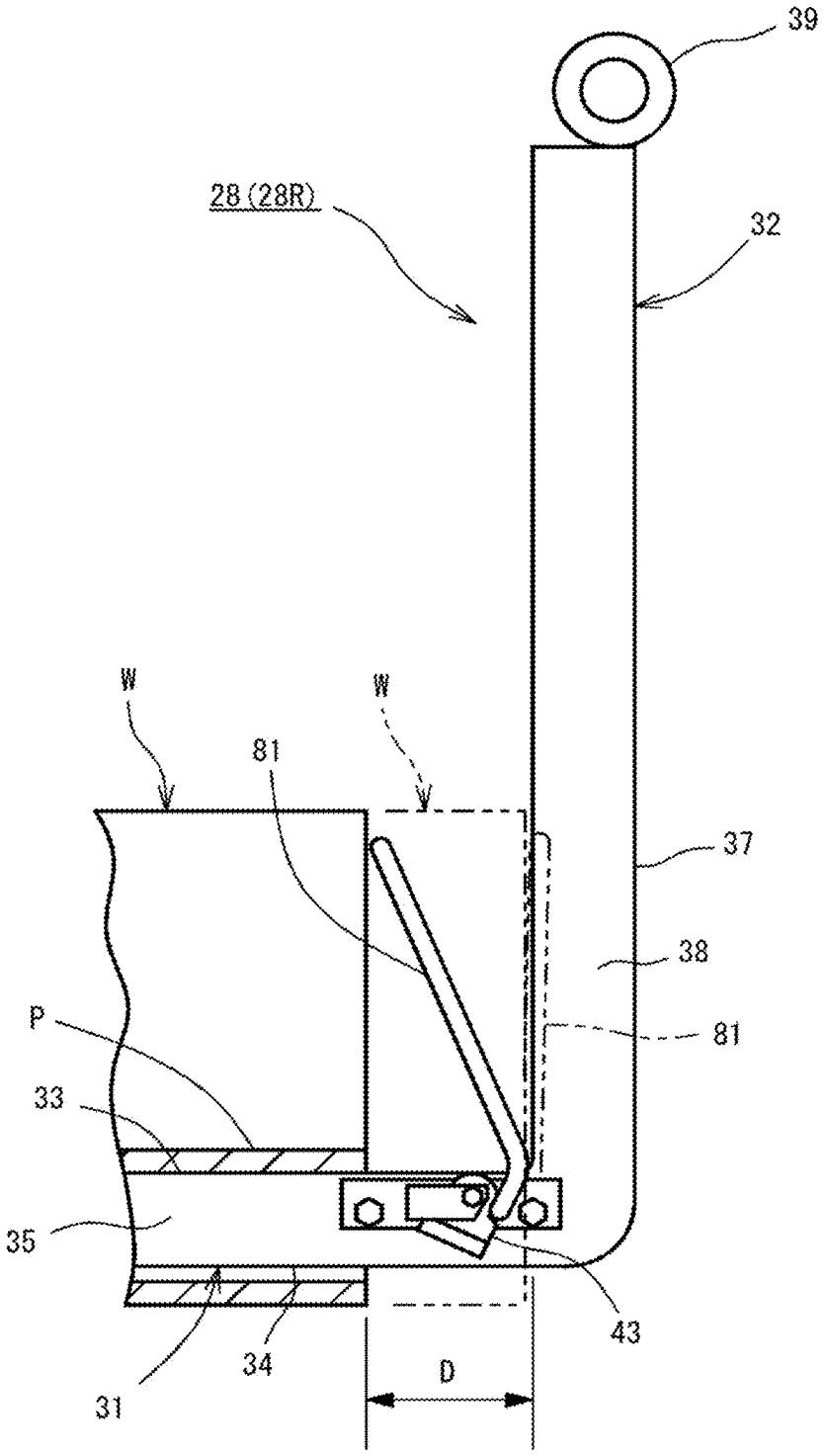

FORKLIFT TRUCK

CROSS-REFERENCE TO RELATED APPLICATION

[0001] This application claims priority to Japanese Patent Application No. 2024-032916 filed on Mar. 5, 2024, the entire disclosure of which is incorporated herein by reference.

[0002] The present disclosure relates to a forklift truck.

BACKGROUND ART

[0003] A load position detector for a forklift truck is mentioned in Japanese Patent Application Publication No. 2006-193255 as a known technique for a forklift truck, for example. The load position detector mentioned in Japanese Patent Application Publication No. 2006-193255 is provided on a forklift truck, and includes a lever rotatably attached to a fork, a cam rotated with the rotation of the lever pressed by a load on the fork, a switch controlled according to the rotation angle of the cam, and detection means for detecting a position of the load on the fork based on the state of the switch. The switch remains in a first state when the rotation angle of the cam is equal to or less than a first threshold, remains in a second state when the rotation angle of the cam is between the first threshold and a second threshold, and remains in the first state when the rotation angle of the cam is equal to or greater than the second threshold. The detection means detects an abnormality in the position of the load if the switch returns to the first state after transitioning from the first state to the second state.

[0004] According to this load position detector, when the load is located at an appropriate position on the fork, the rotation angle of the cam becomes a value between the first threshold and the second threshold, and the switch therefore transitions from the first state to the second state. If the load approaches too close to a chassis of the forklift truck, the rotation angle of the cam becomes greater than the second threshold, and the switch returns from the second state to the first state. The detection means monitors the output of a single switch to detect both that the load is located at an appropriate position on the fork and that the load has approached too close to the chassis. This load position detector is advantageous in that the load position detector prevents the load from coming into contact with the chassis of the forklift truck even with a simple configuration.

[0005] However, this load position detector only detects an abnormality in the position of the load on the fork based on the ON state or OFF state of the limit switch. In recent years, there has been a demand for more accurate detection of the position of a load picked up by a fork. In particular, in order to promote unmanned travel of a forklift truck by automated operation, there is a strong demand for accurate detection of the position of the load on the fork in real time.

[0006] The present disclosure, which has been made in light of the above-described circumstance, is directed to providing a forklift truck that is capable of accurately detecting a position of a load on a fork.

SUMMARY

[0007] In accordance with an aspect of the present disclosure, there is provided a forklift truck comprising: a vehicle body; a load handling device provided on the vehicle body; a fork provided on the load handling device, the fork having a load receiving portion for receiving a load and an extending portion extending upward from a proximal end of the load receiving portion; a load detector for detecting the load on the fork; and a controller connected to the load detector. The load detector includes: a shaft supported by the fork; an arm configured to come into contact with the load on the fork and swing about the shaft; and an angle detection sensor configured to detect a swing angle of the arm. The controller includes a distance calculation unit. The distance calculation unit is configured to calculate a distance between the load and the extending portion in a longitudinal direction of the load receiving portion based on the swing angle detected by the angle detection sensor when the load on the fork comes into contact with the arm and the arm swings.

[0008] Other aspects and advantages of the disclosure will become apparent from the following description, taken in conjunction with the accompanying drawings, illustrating by way of example the principles of the disclosure.

BRIEF DESCRIPTION OF THE DRAWINGS

[0009] The disclosure, together with objects and advantages thereof, may best be understood by reference to the following description of the embodiments together with the accompanying drawings in which:

[0010] FIG. **1** is a plan view of a forklift truck according to a first embodiment;

[0011] FIG. **2** is a side view of the forklift truck according to the first embodiment;

[0012] FIG. **3** is a perspective view of the forklift truck according to the first embodiment, illustrating a main part of the forklift truck;

[0013] FIG. **4** is a perspective view of a load detector for the forklift truck;

[0014] FIG. **5** is a schematic configuration diagram of the forklift truck according to the first embodiment;

[0015] FIG. **6** is a side view of a fork, illustrating a position of a load on the fork;

[0016] FIG. **7** is a plan view of the fork, illustrating the load being placed at an angle on the fork;

[0017] FIG. **8** is a perspective view of a load detector for a forklift truck according to a second embodiment; and

[0018] FIG. **9** is a side view of a load detector according to a modified example.

DETAILED DESCRIPTION OF THE EMBODIMENTS

First Embodiment

[0019] The following will describe a forklift truck according to a first embodiment with reference to the accompanying drawings. The forklift truck according to the first embodiment is capable of unmanned travel by automated operation, and is also capable of manned travel. The forklift truck according to the first embodiment is a reach forklift truck that travels on electric power. The directions explained in the following description are defined with respect to a driver's seat of the forklift truck when an operator sits in the driver's seat and faces the forward direction of the forklift truck.

[0020] FIG. **1** illustrates a forklift truck **10** including a vehicle body **11**. The vehicle body **11** includes a vehicle main body **12**, and a right-left pair of reach legs **13** (**13**R, **13**L) extending forward from a front portion of the vehicle

main body **12**. The reach legs **13** are provided with freely rotatable driven wheels **14**, which serve as front wheels. The driven wheels **14** include a driven wheel **14**R as a right driven wheel, and a driven wheel **14**L as a left driven wheel. FIG. **2** only illustrates the left reach leg **13** (**13**L) with the left driven wheel **14**L.

[0021] As illustrated in FIG. **1**, the vehicle main body **12** includes a drive unit **15** in the left rear portion of the vehicle main body **12**. The drive unit **15** includes a travel motor **16** and a driving wheel **17** serving as a rear wheel. The travel motor **16** drives the driving wheel **17**. This causes the forklift truck **10** to travel on a road surface F. The drive unit **15** includes a steering motor (not illustrated) for steering the driving wheel **17**. The forklift truck **10** includes a chargeable battery (not illustrated) mounted to the vehicle main body **12**. As illustrated in FIG. **1**, the forklift truck **10** includes a caster wheel **18** in the right rear portion of the vehicle main body **12**. The caster wheel **18** is a freely rotatable wheel for stabilizing the posture of the vehicle body **11**.

[0022] As illustrated in FIG. **2**, the forklift truck **10** includes a right pillar **20** and a left pillar **21** extending upward from the vehicle main body **12**. The forklift truck **10** includes a head guard **22** on the right pillar **20** and the left pillar **21**. For the sake of explanation, the head guard **22** is not illustrated in FIG. **1**.

[0023] The forklift truck **10** includes a load handling device **24** provided on the vehicle main body **12**. The load handling device **24** is movable relative to the vehicle main body **12** and disposed between the reach legs **13**. The load handling device **24** includes: an outer mast **25** supported by the right and left reach legs **13**; and an inner mast **26** supported by the outer mast **25** so that the inner mast **26** is movable up and down. The inner mast **26** has a lift support **27** so that the lift support **27** is movable up and down together with the inner mast **26**. The lift support **27** supports a right-left pair of forks **28**. That is, the forks **28** are provided on the load handling device **24**. The upper ends of the forks **28** are supported by the lift support **27** so that the forks **28** tilt. The forks **28** tilt forward and rearward. The forklift truck **10** includes a lift cylinder **29** fixed to the rear of the outer mast **25** for raising and lowering the inner mast **26**. The forklift truck **10** includes a control valve **30** mounted to the vehicle main body **12**. The control valve **30** is configured to control the supply of hydraulic oil to the lift cylinder **29** of the load handling device **24**.

[0024] The following will describe the pair of forks **28**. The pair of forks **28** includes a right fork **28**R and a left fork **28**L that have the same configuration, and the following description will focus on the right fork **28**R. As illustrated in FIG. **3**, the right fork **28**R has: a load receiving portion **31** for receiving a load; and an extending portion **32** extending upward from a proximal end of the load receiving portion **31**. The load receiving portion **31** extends forward, and has an upper surface **33**, a lower surface **34**, and a pair of side surfaces **35**. The upper surface **33** is a flat surface for receiving a load. The thickness of the load receiving portion **31** decreases from a proximal end (rear end) to a distal end (front end) of the load receiving portion **31**. One of the side surfaces **35** faces right and the other of the side surfaces **35** faces the left fork **28**L. According to the present embodiment, the longitudinal direction of the load receiving portion **31** corresponds to the front-rear direction of the forklift truck **10**.

[0025] The extending portion **32** extends upward from the proximal end of the load receiving portion **31**. The longitudinal direction of the extending portion **32** is approximately perpendicular to the longitudinal direction of the load receiving portion **31**. The extending portion **32** has a front surface **36**, a rear surface **37**, and a pair of side surfaces **38**. The front surface **36** is contactable with the load. The rear surface **37** faces the load handling device **24**. One of the side surfaces **38** faces right, and the other of the side surfaces **38** faces the extending portion **32** of the left fork **28**L. A support portion **39** having a cylindrical shape is disposed on the extending portion **32**, and supported by the lift support **27**.

[0026] According to the present embodiment, the forklift truck **10** includes a load detector **40** disposed on the other of the side surfaces **38** of the extending portion **32** of the left fork **28**L (i.e., the fork **28**). As illustrated in FIG. **4**, the load detector **40** for detecting the load on the fork includes a bracket **41**, a shaft **42**, an angle detection sensor **43**, and an arm **44**. The bracket **41** has a base portion **45** having a plate-like shape and fixed to the side surface **38**, a rod portion **46** protruding from the base portion **45** in a direction approximately perpendicular to the side surface **38**, and a support portion **47** having a plate-like shape and fixed to the rod portion **46**. The shaft **42** is supported by the fork **28** via the base portion **45** and the support portion **47**.

[0027] The angle detection sensor **43** includes: a fixed part **51** having a cylindrical shape and fixed to the shaft **42**; and a movable part **52** that rotates about the shaft **42**. The movable part **52** is fixed to the arm **44** so that the arm **44** swings about the shaft **42**. The shaft **42** penetrates through the angle detection sensor **43**. In the present embodiment, a potentiometer serves as the angle detection sensor **43**, and the voltage changes continuously according to the rotation angle of the movable part **52** about the fixed part **51** of the angle detection sensor **43**. The angle detection sensor **43** continuously outputs a signal indicating a change in voltage according to the rotation angle of the movable part **52**. That is, the angle detection sensor **43** is configured to detect the swing angle of the arm **44**.

[0028] The arm **44** fixed to the movable part **52** is formed of a metal bar. The arm **44** has a proximal end portion **53** fixed to the movable part **52** of the angle detection sensor **43** and an arm main body **54** extending downward and forward from the proximal end portion **53**. The axis of the proximal end portion **53** is approximately parallel to the axis of the shaft **42**. The arm **44** is bent so that the arm main body **54** is approximately perpendicular to the proximal end portion **53**. The arm main body **54** has a bent portion **55** so that the axial direction of the arm main body **54** is slightly changed.

[0029] When the load on the fork **28** comes into contact with the arm **44**, the arm **44** swings about the shaft **42**. The presence of the bent portion **55** allows the load to approach the extending portion **32** most closely in the longitudinal direction of the load receiving portion **31** when the arm **44** swings the most toward the extending portion **32**. The support portion **47** of the bracket **41** has a cutout **56**. The presence of the cutout **56** prevents interference between the support portion **47** and the proximal end portion **53** when the arm **44** swings the most toward the extending portion **32**. The cutout **56** is formed so as to match the path of the support portion **47** when the arm **44** swings.

[0030] The load detector **40** includes a torsion coil spring **57** as an urging member. The torsion coil spring **57** always applies an urging force to the movable part **52** of the angle

detection sensor **43** so that the arm **44** moves toward the distal end of the load receiving portion **31** of the fork **28**. The shaft **42** is inserted through the center of the torsion coil spring **57**. One end of the torsion coil spring **57** is retained in the base portion **45** of the bracket **41**, and the other end of the torsion coil spring **57** is retained in the movable part **52** of the angle detection sensor **43**. As the arm **44** approaches the extending portion **32**, the urging force applied to the movable part **52** increases. The urging force does not displace the load on the fork **28**. In the present embodiment, the torsion coil spring **57** serves as the urging member. However, a spring, such as a compression coil spring, may serve as the urging member instead of the torsion coil spring.

[0031] The forklift truck **10** includes a controller **60** for controlling devices of the vehicle body **11**, and the controller **60** is accommodated in the vehicle main body **12**. The controller **60** includes a central processing unit (CPU) as a processing unit, random access memory (RAM) and read-only memory (ROM) as storage units, a communication unit for communicating with the devices of the vehicle body **11** and external devices, and the like. The controller **60** loads a program from the ROM into the RAM. The CPU retrieves instructions from the RAM and executes them to perform the tasks specified by the program. The controller **60** may include a dedicated hardware circuit, such as an application-specific integrated circuit (ASIC), for example. The controller **60** may include at least one processor that is configured to operate by a computer program, at least one dedicated hardware circuit, and a combination of the processor and the dedicated hardware circuit.

[0032] The forklift truck **10** of the present embodiment is capable of unmanned travel by automated operation. Accordingly, the controller **60** includes a route setting unit **61**, as illustrated in FIG. **5**. The route setting unit **61** is configured to set in advance a travel route along which the forklift truck **10** travels unmanned by automated operation. Specifically, the controller **60** stores a map including travel routes along which the forklift truck **10** may travel unmanned. The controller **60** selects and sets an optimal travel route to the destination of the forklift truck **10** based on conditions, such as a travel distance and travel speed.

[0033] The controller **60** includes a distance calculation unit **62** and a determination unit **63**. The controller **60** is connected to the load detector **40**. The distance calculation unit **62** is configured to calculate a distance D between the rear surface of a load W on the fork **28** and the front surface **36** of the extending portion **32** in the longitudinal direction of the load receiving portion **31** (see FIG. **6**) based on the swing angle of the arm **44** detected by the angle detection sensor **43**. Specifically, the distance calculation unit **62** calculates the distance D based on the rotation angle of the movable part **52** of the angle detection sensor **43** about the fixed part **51** by using a trigonometric function. The distance calculation unit **62** calculates the distance D according to the change in the swing angle continuously. As illustrated in FIG. **6**, the load W includes a pallet P on which the load is placed. For the sake of explanation, FIG. **6** fragmentary illustrates the pallet P with a fork insertion hole through which the fork **28** is inserted.

[0034] The determination unit **63** is configured to determine whether the condition of the load W on the fork **28** is abnormal. Specifically, the determination unit **63** monitors the calculated distance D, and determines that the condition of the load W is abnormal when the distance D increases over time. For example, as illustrated in FIG. **6**, when the load W moves forward from a position indicated by a two-dot chain line to a position indicated by a solid line, the determination unit **63** determines that the condition of the load W is abnormal. In this case, the load W moves toward the distal end of the fork **28**, and the load W may fall from the fork **28**. Also, the determination unit **63** determines that the condition of the load W is abnormal when the difference between the swing angle detected by the angle detection sensor **43** on the right fork **28**R and the swing angle detected by the angle detection sensor **43** on the left fork **28**L is equal to or greater than a threshold. In this case, as illustrated in FIG. **7**, the load W is excessively inclined with respect to the longitudinal direction (front-rear direction) of the load receiving portion **31** of the forks **28** in a plan view, for example.

[0035] As illustrated in FIG. **5**, the controller **60** is connected to the travel motor **16**, the control valve **30**, and an abnormality alarm **64**. The abnormality alarm **64** is controlled by the controller **60**. The abnormality alarm **64** may include, for example, at least one of a warning buzzer that emits a warning sound to the surroundings and a warning light (for example, a red rotating light or a stack indicator light) that emits a beam of light when the condition of the load W is abnormal. When the determination unit **63** determines that the condition of the load W is abnormal, the controller **60** activates the abnormality alarm **64**. The abnormality alarm **64** in the present embodiment serves as the first abnormality alarm and the second abnormality alarm of the present disclosure for indicating that the condition of the load is abnormal. Specifically, the first abnormality alarm indicates an abnormality in the position of the load on the fork **28** when the load moves on the fork **28**, and the second abnormality alarm indicates an abnormality in the posture of the load with respect to the fork **28** when the load is inclined with respect to the fork **28**.

[0036] When the distance D increases over time, the controller **60** decelerates and stops the forklift truck **10**. When the difference between the swing angles detected by the right and left angle detection sensors **43** is equal to or greater than the threshold, the controller **60** resets the travel route based on the posture of the load W or controls the load handling device **24** so that the load handling operation is reperformed with the forks **28**. The travel route is reset by the route setting unit **61**. For example, the route setting unit **61** resets the travel route that causes the forklift truck **10** to travel diagonally according to the inclination of the load W. If the load W is excessively inclined with respect to the longitudinal direction of the load receiving portion **31**, the inclination of the load W may not be corrected by resetting the travel route. In this case, the controller **60** controls the control valve **30** so that the lift cylinder **29** operates to reperform the load handling operation in order to correct the excessive inclination of the load W with respect to the longitudinal direction of the load receiving portion **31**.

[0037] The following will describe the operation of the forklift truck **10** of the present embodiment. The forklift truck **10** travels unmanned by automated operation and performs loading and unloading operations of the load W. The route setting unit **61** sets in advance an optimal travel route to the destination along which the forklift truck **10** travels unmanned by automated operation. When the fork **28** is inserted into the pallet P to pick up the load W including

the pallet P, the arm **44** of the load detector **40** comes into contact with the rear surface of the load W. When the fork **28** is inserted deeply into the pallet P, the arm **44** is pressed against the load W and displaced rearward against the urging force of the torsion coil spring **57**, and the movable part **52** of the angle detection sensor **43** rotates about the fixed part **51**.

[0038] The movable part **52** rotates about the fixed part **51**, so that the voltage changes according to the rotation angle of the movable part **52**. The angle detection sensor **43** continuously outputs a signal indicating a change in the voltage. Upon receiving a signal from the angle detection sensor **43**, the distance calculation unit **62** of the controller **60** calculates the distance D between the rear surface of the load W and the front surface **36** of the extending portion **32** based on the rotation angle of the movable part **52**. That is, the distance calculation unit **62** calculates the distance D continuously based on the displacement of the arm **44** (i.e., the swing angle of the arm **44**). As the load W approaches the front surface **36** of the extending portion **32**, the swing angle of the arm **44** increases and the distance D decreases. When the displacement of the arm **44** (i.e., the swing angle of the arm **44**) is maximum, the distance D is 0.

[0039] The angle detection sensor **43** is provided on each of the right fork **28**R and the left fork **28**L. Each angle detection sensor **43** detects the swing angle of the corresponding arm **44**. The distance calculation unit **62** calculates the distance D between the rear surface of the load W and the front surface **36** of the extending portion **32** of the right fork **28**R and the distance D between the rear surface of the load W and the front surface **36** of the extending portion **32** of the left fork **28**L.

[0040] The distance calculation unit **62** of the controller **60** calculates the distance D continuously based on the displacement of the arm **44**. The determination unit **63** determines whether the condition of the load W is abnormal. The determination unit **63** monitors the calculated distance D, and determines that the condition of the load W is abnormal when the distance D increases over time. When the determination unit **63** determines that the condition of the load W is abnormal, the controller **60** activates the abnormality alarm **64** and controls the travel motor **16** so that the forklift truck **10** decelerates and stops.

[0041] Also, the determination unit **63** determines that the condition of the load W is abnormal when the difference between the swing angle detected by the angle detection sensor **43** on the right fork **28**R and the swing angle detected by the angle detection sensor **43** on the left fork **28**L is equal to or greater than the threshold. In this case, the load W is excessively inclined with respect to the longitudinal direction of the load receiving portion **31** of the forks **28** in a plan view, and the controller **60** activates the abnormality alarm **64**. When the difference between the swing angles detected by the right and left angle detection sensors **43** is equal to or greater than the threshold, the controller **60** resets the travel route based on the posture of the load W or controls the load handling device **24** so that the load handling operation is reperformed with the forks **28**.

[0042] The travel route is reset by the route setting unit **61**. For example, the route setting unit **61** resets the travel route that causes the forklift truck **10** to travel diagonally according to the inclination of the load W (see FIG. **7**). If the load W is excessively inclined, the inclination of the load W may not be corrected by resetting the travel route. In this case, the controller **60** controls the load handling device **24** so that the load handling operation is reperformed with the forks **28**. After the travel route is reset or the load handling operation is reperformed, the controller **60** stops the abnormality alarm **64**. When the determination unit **63** determines that the condition of the load W is not abnormal, the forklift truck **10** continues to travel unmanned by automated operation.

[0043] The forklift truck **10** of the present embodiment achieves the following advantages effects.

[0044] (1) When the load W on the fork **28** comes into contact with the arm **44**, the arm **44** swings about the shaft **42**. When the arm **44** swings, the swing angle of the arm **44** is detected by the angle detection sensor **43**. The distance calculation unit **62** of the controller **60** calculates the distance D between the load W on the load receiving portion **31** and the extending portion **32** based on the swing angle of the arm **44** detected by the angle detection sensor **43**. This allows the controller **60** to accurately determine the position of the load W on the fork **28**. For example, if the shape of the fork insertion hole varies depending on the type of pallet, the controller **60** accurately determines the position of the load W on the fork **28**, which ensures high robustness.

[0045] (2) The angle detection sensor **43** detects the swing angle of the arm **44** continuously. This allows the controller **60** to determine the position of the load W on the fork **28** continuously.

[0046] (3) The forklift truck **10** includes the abnormality alarm **64** for indicating that the condition of the load W on the fork **28** is abnormal. When the load W moves toward the distal end of the load receiving portion **31**, the controller **60** activates the abnormality alarm **64**. When the load W moves toward the distal end of the load receiving portion **31** during travel or loading, the swing angle of the arm **44** detected by the angle detection sensor **43** decreases. The controller **60** activates the abnormality alarm **64** when the load W moves toward the distal end of the load receiving portion **31**. Accordingly, an abnormality in the position of the load W on the fork **28** is detectable.

[0047] (4) When the difference between the swing angle detected by the angle detection sensor **43** (i.e., one of the angle detection sensors **43**) on the right fork **28**R and the swing angle detected by the angle detection sensor **43** (i.e., the other of the angle detection sensors **43**) on the left fork **28**L is equal to or greater than the threshold, the controller **60** determines that the load W is excessively inclined with respect to an insertion direction of the fork **28**, and activates the abnormality alarm **64**. Accordingly, an abnormality in the posture of the load W on the fork **28** is detectable.

[0048] (5) The controller **60** includes the route setting unit **61** configured to set in advance a travel route along which the forklift truck **10** travels. When the abnormality alarm **64** is activated, the controller **60** resets the travel route based on the posture of the load W, or controls the load handling device **24** so that the load handling operation is reperformed with the forks **28**. This eliminates the need to stop the forklift truck **10**.

[0049] (6) The forklift truck **10** is capable of unmanned travel by automated operation. That is, the forklift truck according to the present embodiment is capable of travelling unmanned and accurately determining the position of the load W on the forks **28**.

Second Embodiment

[0050] The following will describe a forklift truck according to a second embodiment. In the second embodiment, the configuration of the arm is different from that of the first embodiment. In the following description, elements identical to those in the first embodiment are denoted by the same reference numerals, and a detailed description of elements and configuration identical to those in the first embodiment is omitted.

[0051] As illustrated in FIG. **8**, a forklift truck **70** according to the second embodiment includes a load detector **71** disposed on the side surface **38** of the right fork **28**R. The load detector **71** for detecting the load on the fork includes the bracket **41**, the shaft **42**, the angle detection sensor **43**, the torsion coil spring **57**, and an arm **72**. The arm **72** is formed by bending a metal plate. The arm **72** has a flat plate portion **73** that is contactable with the load W, and a pair of side plate portions **74** that are bent portions of the metal plate extending from the both side ends of the flat plate portion **73**. The arm **72** is fixed to the movable part **52** of the angle detection sensor **43**. That is, the arm **72** is supported so that the arm **72** swings about the shaft **42**. In the present embodiment, the lengths of the fixed part **51** and the rod portion **46** correspond to the width of the flat plate portion **73** of the arm **72**.

[0052] The front surface of the flat plate portion **73** of the arm **72** is substantially flush with the front surface **36** of the extending portion **32** when the displacement of the arm **72** (i.e., the swing angle of the arm **72**) is maximum. Although not illustrated, the left fork **28**L also has the load detector **71**.

[0053] The present embodiment achieves the same advantageous effects as those of the first embodiment. Furthermore, the arm **72** according to the second embodiment is formed of a metal plate, and therefore is less prone to deformation and has superior durability compared to the rod-shaped arm **44** according to the first embodiment.

[0054] The present disclosure is not limited to the above-described embodiments, and various modifications are possible within the scope of the disclosure. For example, the forklift truck of the present disclosure may be modified as follows.

[0055] In the embodiments, each of the forks is provided with the load detector, but not limited thereto. Only one of the forks may be provided with the load detector.

[0056] In the embodiments, the angle detection sensor detects the swing angle of the arm continuously, but not limited thereto. The angle detection sensor may detect the swing angle stepwise.

[0057] In the embodiments, the angle detection sensor is disposed on the extending portion of the fork, but not limited thereto. As illustrated in FIG. **9**, the angle detection sensor **43** may be disposed, for example, on the side surface **35** of the load receiving portion **31** of the fork **28**. In this configuration, the load detector includes an arm **81** on the movable part **52** of the angle detection sensor **43**, and the arm **81** extends upward and forward from the side surface **35** of the load receiving portion **31**. This configuration allows the angle detection sensor to be disposed on the fork, even when it is not possible to dispose the angle detection sensor on the extending portion of the fork.

[0058] In the embodiments, the forklift truck includes the abnormality alarm, but not limited thereto. For example, the forklift truck does not necessarily have to include the abnormality alarm. Regardless of whether the forklift truck includes the abnormality alarm, when the determination unit determines that the load has moved toward the distal end of the load receiving portion of the fork, the forklift truck decelerates and stops. When the determination unit determines that the load has been inclined with respect to the longitudinal direction of the load receiving portion of the fork, the travel route is reset or the load handling operation is reperformed.

[0059] In the above embodiment, the abnormality alarm **64** serves as both the first abnormality alarm and the second abnormality alarm, but not limited thereto. For example, the forklift truck may include abnormality alarms, i.e., a first abnormality alarm for indicating an abnormality in the position of the load when the load moves on the fork and a second abnormality alarm for indicating an abnormality in the posture of the load when the load is inclined with respect to the load receiving portion. In this configuration, an abnormality in the position of the load and an abnormality in the posture of the load may be detected by a single angle detection sensor.

What is claimed is:

1. A forklift truck comprising:
a vehicle body;
a load handling device provided on the vehicle body;
a fork provided on the load handling device, the fork having a load receiving portion for receiving a load and an extending portion extending upward from a proximal end of the load receiving portion;
a load detector for detecting the load on the fork; and
a controller connected to the load detector, wherein
the load detector includes:
a shaft supported by the fork;
an arm configured to come into contact with the load on the fork and swing about the shaft; and
an angle detection sensor configured to detect a swing angle of the arm, and
the controller includes a distance calculation unit, the distance calculation unit being configured to calculate a distance between the load and the extending portion in a longitudinal direction of the load receiving portion based on the swing angle detected by the angle detection sensor when the load on the fork comes into contact with the arm and the arm swings.

2. The forklift truck according to claim **1**, wherein
the angle detection sensor detects the swing angle of the arm continuously or stepwise.

3. The forklift truck according to claim **1**, wherein
the forklift truck includes a first abnormality alarm for indicating that a condition of the load is abnormal, and
the controller activates the first abnormality alarm when the load moves toward a distal end of the load receiving portion.

4. The forklift truck according to claim **1**, wherein
the forklift truck includes a second abnormality alarm for indicating that a condition of the load is abnormal,
the fork includes a pair of forks,
the angle detection sensor includes a pair of angle detection sensors,
the forks are provided with the angle detection sensors, respectively, and
the controller activates the second abnormality alarm when a difference between the swing angle detected by one of the angle detection sensors and the swing angle

detected by the other of the angle detection sensors is equal to or greater than a threshold.

5. The forklift truck according to claim **4**, wherein

the controller includes a route setting unit configured to set in advance an optimal travel route to a destination, and

when the second abnormality alarm is activated, the controller resets the travel route based on a posture of the load, or controls the load handling device so that load handling operation is reperformed with the forks.

6. The forklift truck according to claim **3**, wherein the forklift truck is capable of travelling unmanned by automated operation.

7. The forklift truck according to claim **5**, wherein the forklift truck is capable of travelling unmanned by automated operation.

* * * * *