US012397307B2

(12) **United States Patent**
Sakata et al.

(10) **Patent No.: US 12,397,307 B2**
(45) **Date of Patent: Aug. 26, 2025**

(54) **TRIGGER-TYPE LIQUID SPRAYER**

(71) Applicant: **YOSHINO KOGYOSHO CO., LTD.**, Tokyo (JP)

(72) Inventors: **Kota Sakata**, Tokyo (JP); **Kotaro Fujiwara**, Tokyo (JP)

(73) Assignee: **YOSHINO KOGYOSHO CO., LTD.**, Tokyo (JP)

(*) Notice: Subject to any disclaimer, the term of this patent is extended or adjusted under 35 U.S.C. 154(b) by 183 days.

(21) Appl. No.: **18/036,912**

(22) PCT Filed: **Nov. 11, 2021**

(86) PCT No.: **PCT/JP2021/041553**

§ 371 (c)(1),
(2) Date: **May 15, 2023**

(87) PCT Pub. No.: **WO2022/113751**

PCT Pub. Date: **Jun. 2, 2022**

(65) **Prior Publication Data**

US 2023/0415183 A1 Dec. 28, 2023

(30) **Foreign Application Priority Data**

Nov. 30, 2020 (JP) 2020-199026
Dec. 25, 2020 (JP) 2020-217401

(51) **Int. Cl.**
B05B 11/00 (2023.01)
B05B 11/10 (2023.01)

(52) **U.S. Cl.**
CPC ***B05B 11/0044*** (2018.08); ***B05B 11/007*** (2013.01); ***B05B 11/0089*** (2013.01);
(Continued)

(58) **Field of Classification Search**
CPC B05B 11/0044; B05B 11/0089; B05B 11/1057; B05B 11/1067; B05B 11/007;
(Continued)

(56) **References Cited**

U.S. PATENT DOCUMENTS

5,628,434 A * 5/1997 Foster B05B 11/1063 239/333
10,357,791 B2 * 7/2019 Kakuta B05B 11/1057
(Continued)

FOREIGN PATENT DOCUMENTS

CN 108473238 B 5/2020
JP 2008-194642 A 8/2008
(Continued)

OTHER PUBLICATIONS

Apr. 9, 2024 Notice of Allowance issued in Japanese Patent Application No. 2020-217401.
(Continued)

Primary Examiner — Frederick C Nicolas
(74) *Attorney, Agent, or Firm* — Oliff PLC

(57) **ABSTRACT**

A trigger-type liquid sprayer includes a sprayer main body mounted on a container body, and a nozzle member having a spray hole, the sprayer main body includes a vertical supply tube, a trigger mechanism having a trigger portion, a reservoir cylinder into which a liquid that has passed through the inside of the vertical supply tube is supplied in response to rearward movement of the trigger portion, and a reservoir plunger movably disposed inside the reservoir cylinder and configured to move toward one side in response to supply of the liquid into the reservoir cylinder while being biased toward the other side, and a displacement curbing portion is provided between a rear cylinder portion of the reservoir cylinder protruding rearward beyond the vertical supply tube and the vertical supply tube and configured to curb displacement of the rear cylinder portion with respect to the vertical supply tube.

8 Claims, 12 Drawing Sheets

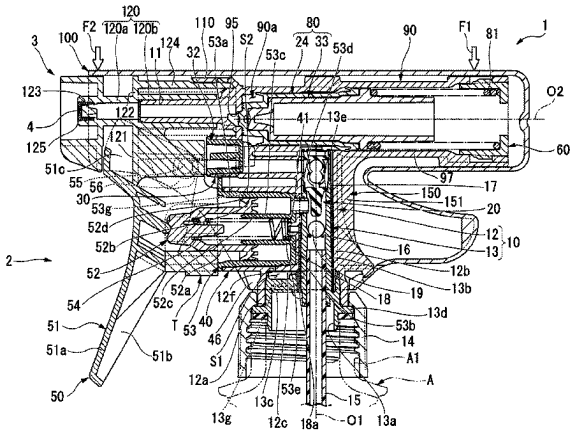

(52) **U.S. Cl.**
CPC ***B05B 11/1011*** (2023.01); ***B05B 11/104*** (2023.01); ***B05B 11/1057*** (2023.01); ***B05B 11/1059*** (2023.01); ***B05B 11/1063*** (2023.01); *B05B 11/0008* (2013.01); *B05B 11/1067* (2023.01)

(58) **Field of Classification Search**
CPC B05B 11/1011; B05B 11/104; B05B 11/1059; B05B 11/1063; B05B 11/0008
See application file for complete search history.

(56) **References Cited**

U.S. PATENT DOCUMENTS

2017/0216863	A1	8/2017	Kakuta et al.	
2017/0328361	A1	11/2017	Tu	
2018/0369842	A1*	12/2018	Kakuta	B05B 11/1011
2024/0009693	A1*	1/2024	Sakata	B05B 11/1059
2024/0367189	A1*	11/2024	Sakata	F04B 9/14

FOREIGN PATENT DOCUMENTS

JP	2014-166612	A	9/2014
JP	2015-062886	A	4/2015
JP	2016-203141	A	12/2016
JP	2017-131864	A	8/2017
JP	2017-213497	A	12/2017
JP	2018-69186	A	5/2018
JP	2019-177897	A	10/2019
WO	2006/073307	A1	7/2006

OTHER PUBLICATIONS

Dec. 14, 2021 International Search Report issued in International Patent Application No. PCT/JP2021/041553.
Oct. 9, 2024 Extended Search Report issued in European Patent Application No. 21897725.4.

* cited by examiner

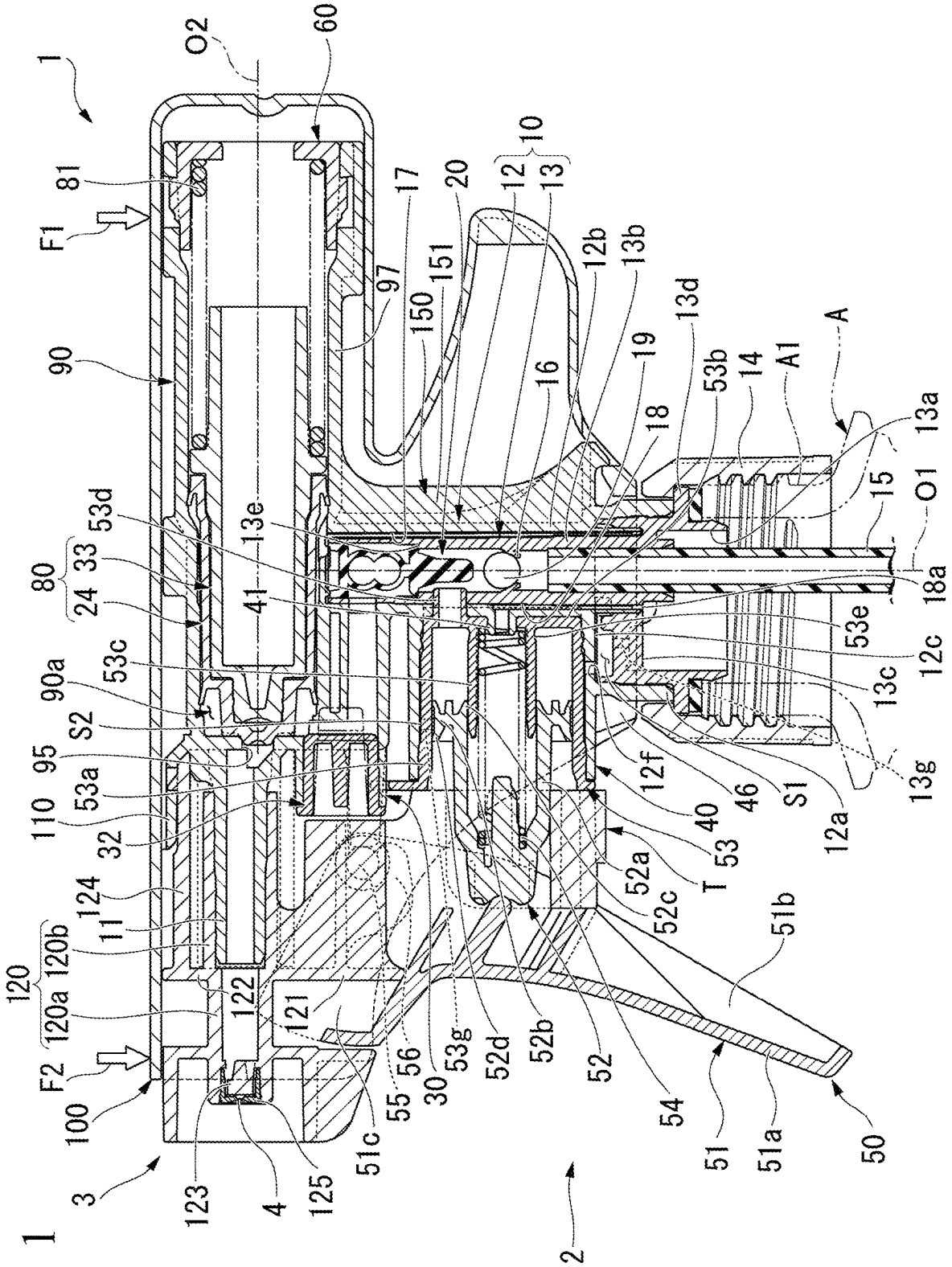
1
O2
60
81
F1
90
97
151
150
17
20
10
12
13
12b
13b
13d
19
16
18
53b
14
A1
A
13a
15
O1
18a
53d
13e
80
33
24
41
53e
12c
13c
53c
90a
S2
95
53a
110
32
124
11
120b
120
120a
122
121
F2
100
3
123
4
125
51c
55
56
30
53g
52d
52b
52
54
12f
40
46
S1
12a
13g
53
T
52a
52c
51b
51
51a
50
2

FIG. 1

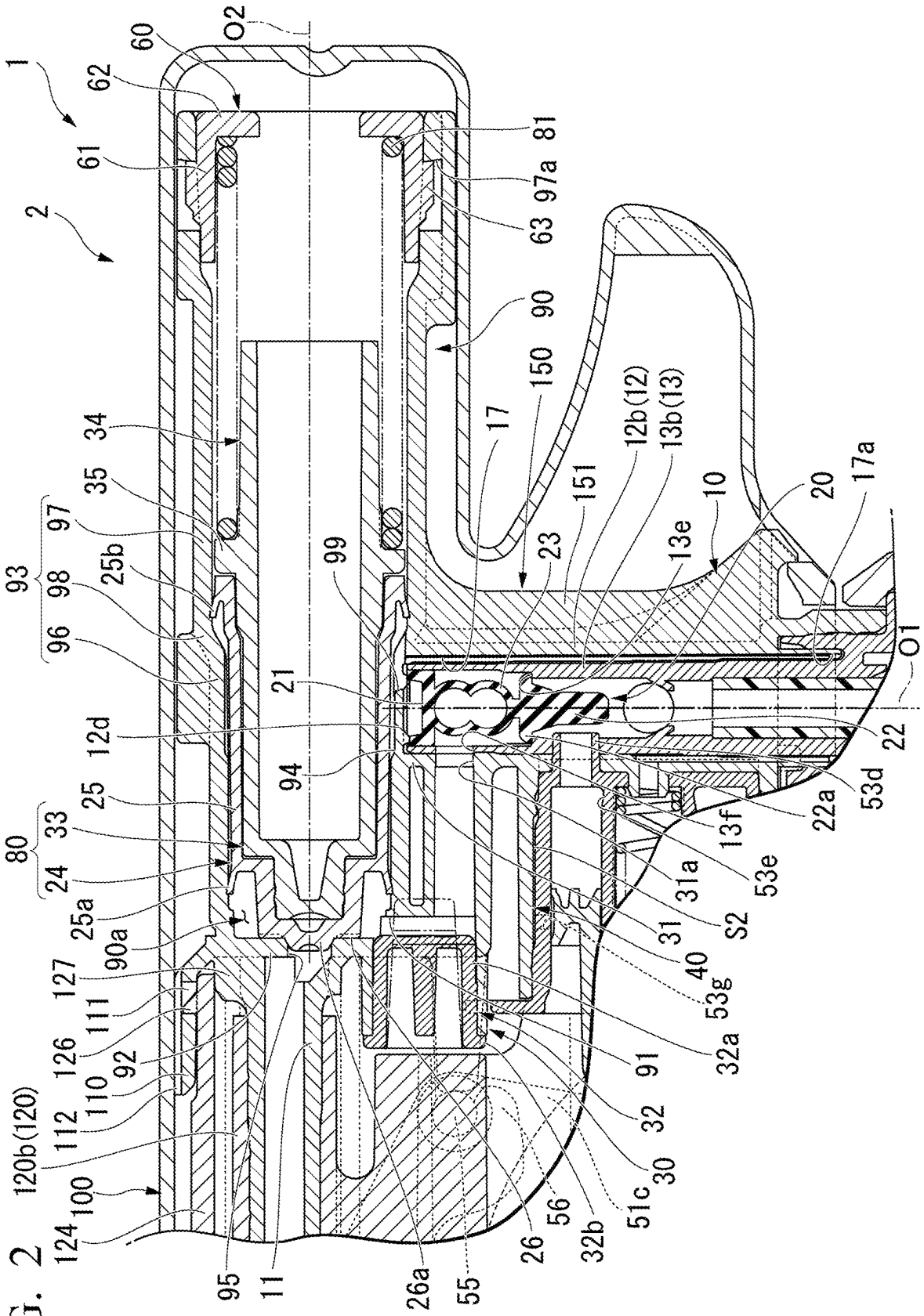
1
2
60
62
61
O2
81
97a
63
90
150
17
12b(12)
13b(13)
151
10
20
17a
13e
23
34
35
97
93
98
96
25b
99
21
12d
94
25
80
33
24
25a
90a
127
111
126
92
110
112
120b(120)
100
124
95
11
26a
55
26
56
32b
51c
30
32
91
32a
53g
40
31
S2
31a
53e
13f
22a
53d
22
O1

FIG. 2

FIG. 3

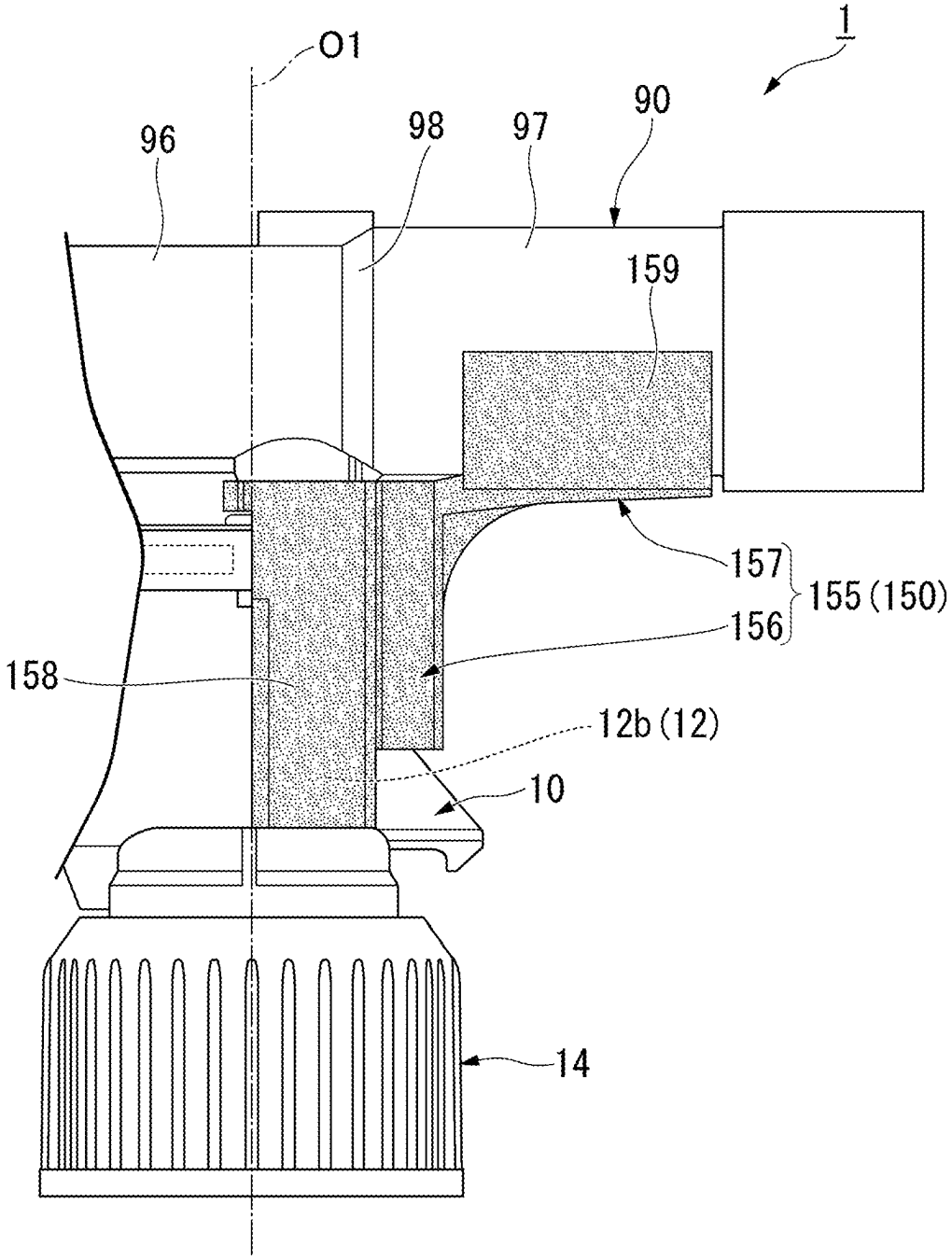

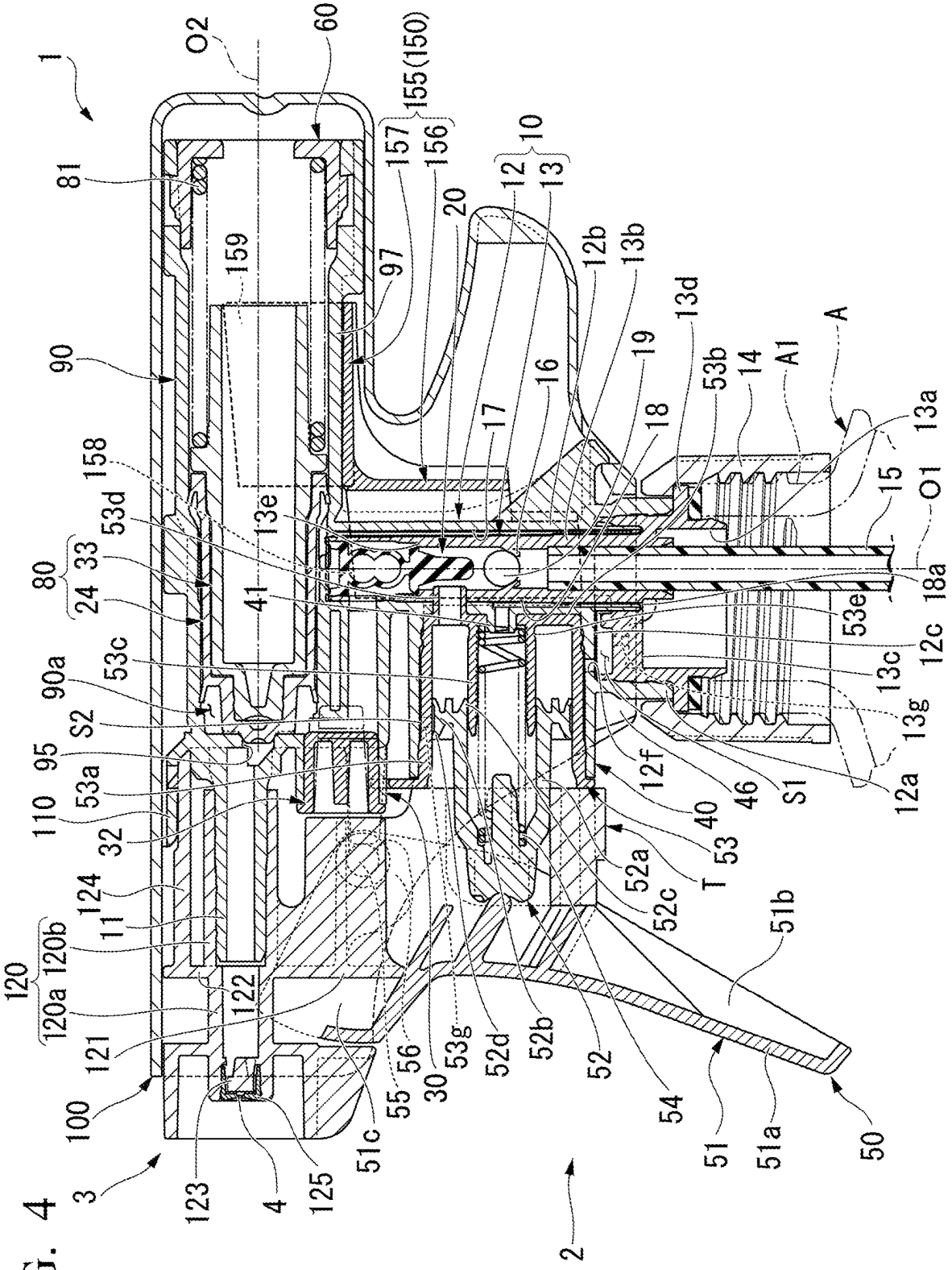
1
O2
60
155(150)
157
156
10
12
13
81
20
159
97
12b
13b
13d
A
90
19
16
53b
14
A1
17
18
13a
158
15
O1
53d
13e
80
33
24
41
18a
53e
12c
53c
13c
90a
13g
S2
95
53a
12f
46
S1
12a
110
32
40
53
T
52a
124
11
52c
51b
120
120b
120a
122
121
56
30
53g
52d
52b
52
54
51
51a
50
100
55
51c
123
4
125
3
2

FIG. 4

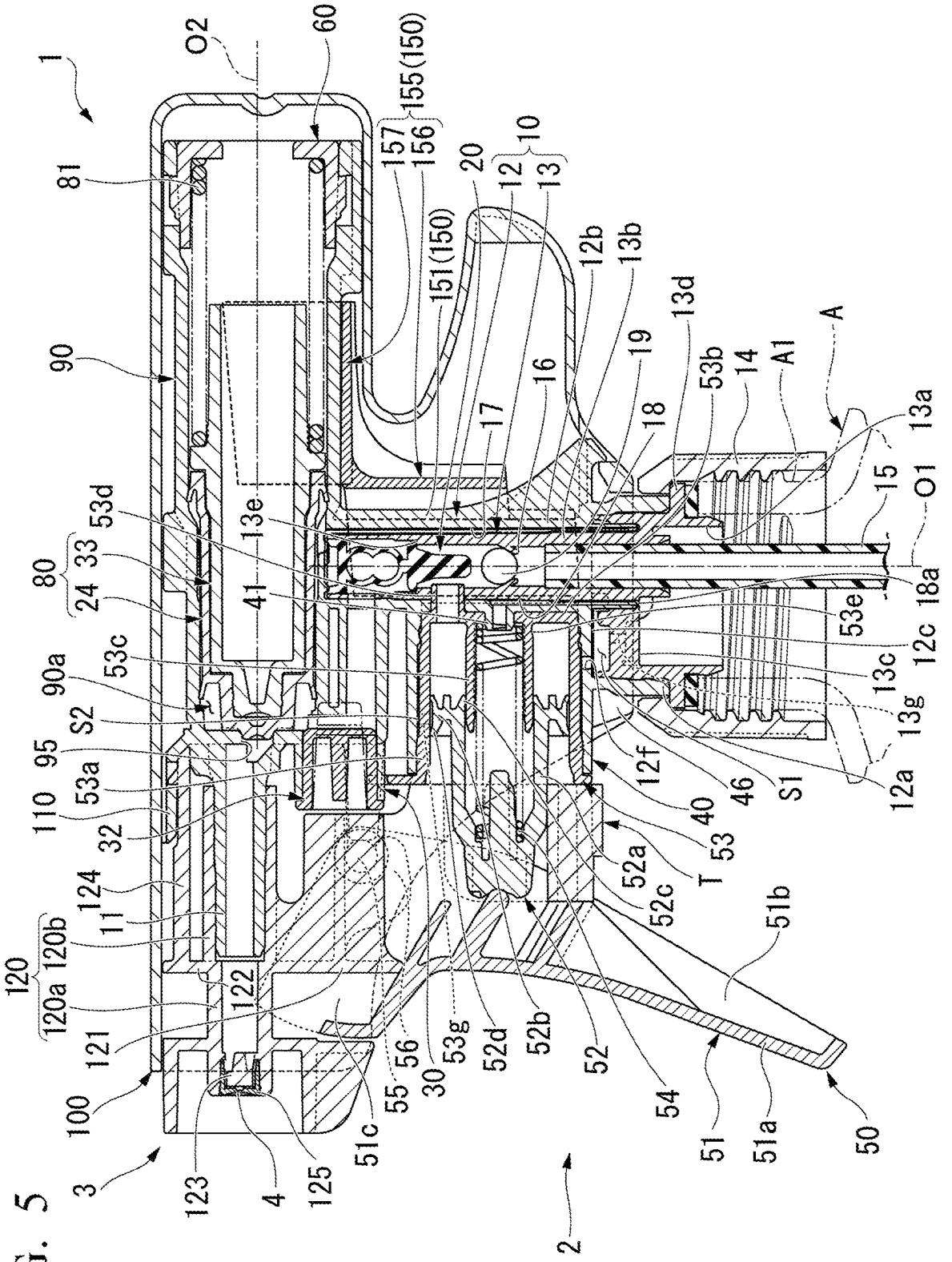
1
O2
60
155(150)
157
156
81
20
10
12
13
151(150)
12b
13b
13d
A
90
19
16
17
18
53b
14
A1
13a
15
O1
53d
13e
80
33
24
41
18a
53e
12c
53c
13c
90a
S2
13g
95
53a
12f
46
S1
12a
110
32
40
53
T
52a
124
11
52c
120b
51b
120
120a
122
121
56
30
53g
52d
52b
52
54
51
51a
50
100
55
51c
123
4
125
3
2

FIG. 5

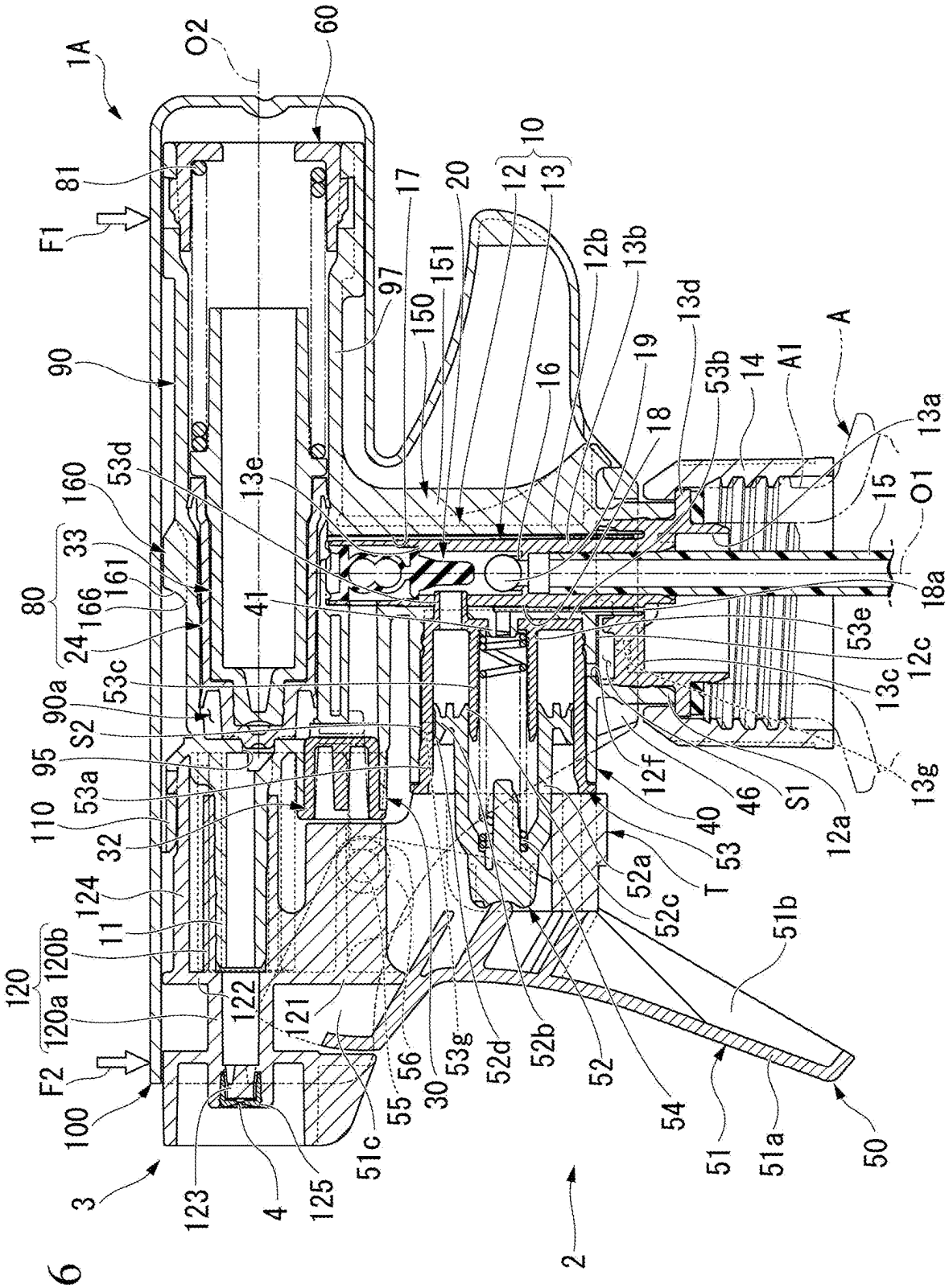
1A
O2
60
81
F1
90
17
20
10
12
13
97
151
150
12b
13b
13d
19
16
18
53b
14
A1
A
13a
15
O1
18a
53d
160
13e
33
161
166
80
24
41
53e
12c
13c
53c
90a
S2
95
53a
110
32
124
11
120
120b
120a
122
121
F2
100
3
123
4
125
51c
55
56
30
53g
52d
52b
52
54
51
51a
50
2
12f
40
46
S1
12a
13g
53
T
52a
52c
51b

FIG. 6

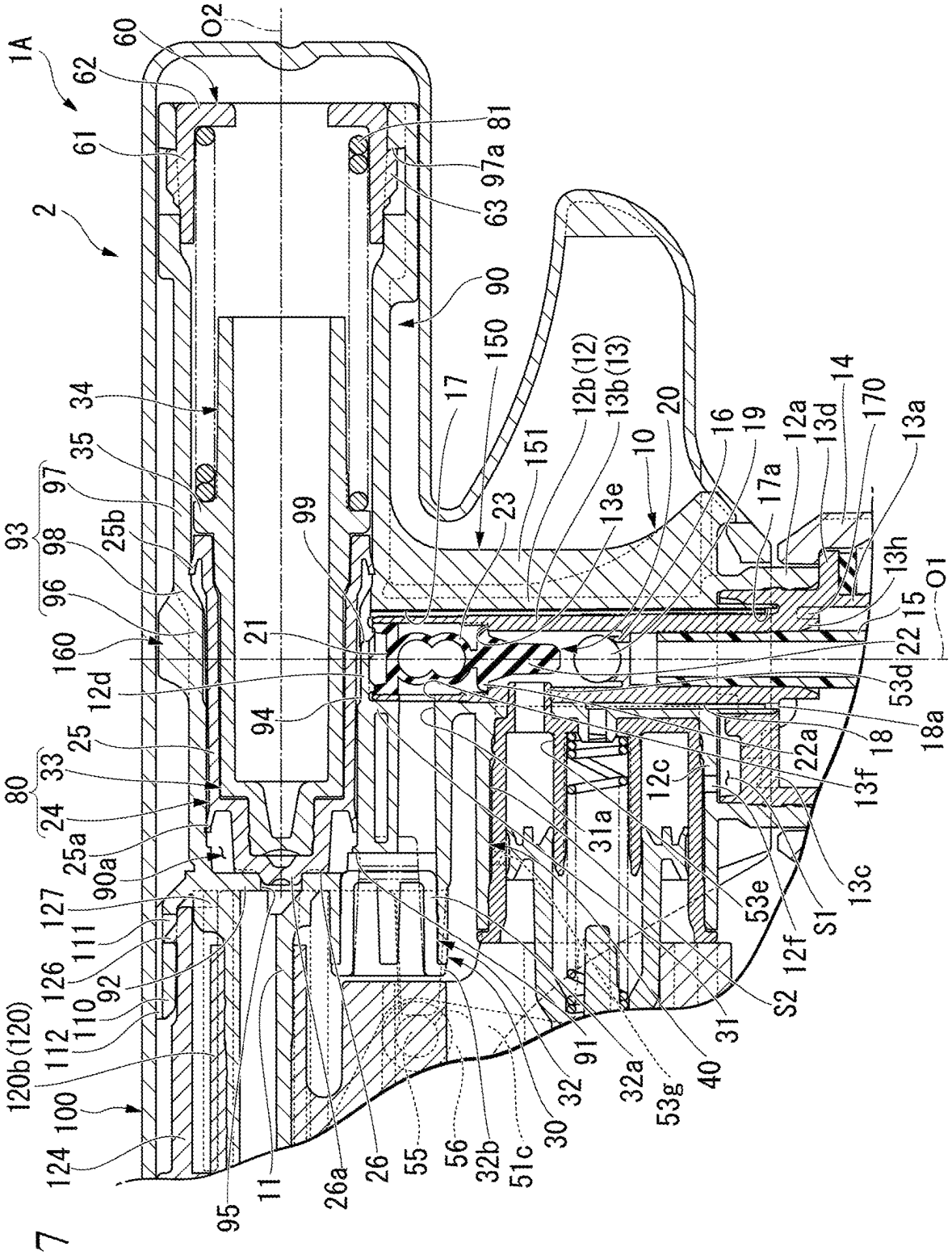
1A
2
60
62
61
O2
81
97a
63
90
150
17
151
12b(12)
13b(13)
20
10
16
19
12a
13d
14
170
13a
34
35
97
93
98
25b
96
99
23
13e
17a
13h
O1
15
22
53d
18
18a
160
21
12d
94
25
33
80
24
25a
90a
127
111
126
92
110
112
120b(120)
100
124
95
11
26a
26
55
56
32b
51c
30
32
91
32a
53g
40
31
S2
12f
S1
53e
13c
13f
22a
12c
31a

FIG. 7

FIG. 8

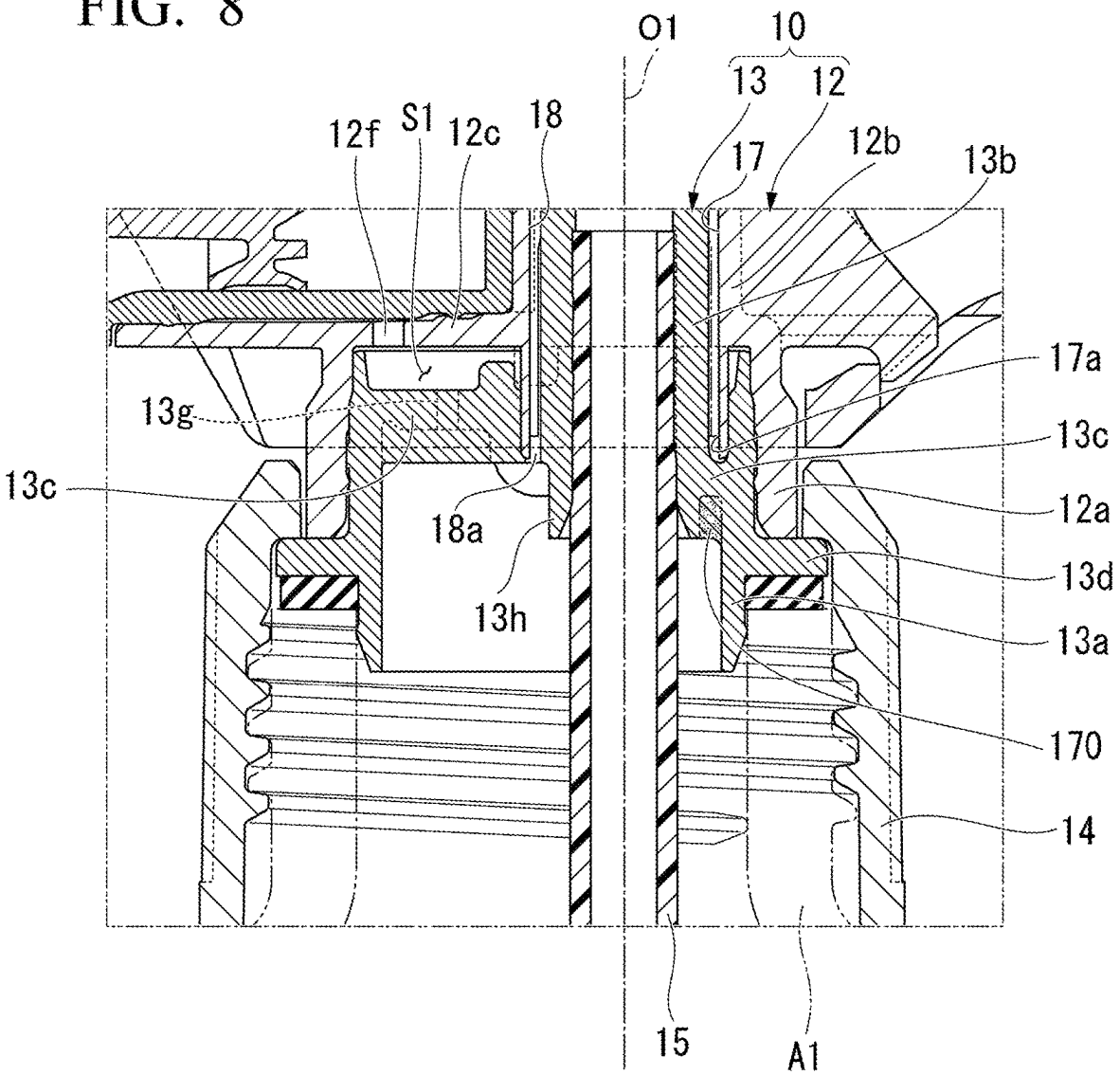
O1
10
13
12
12f
S1
12c
18
17
12b
13b
17a
13g
13c
13c
12a
18a
13d
13h
13a
170
14
15
A1

FIG. 9

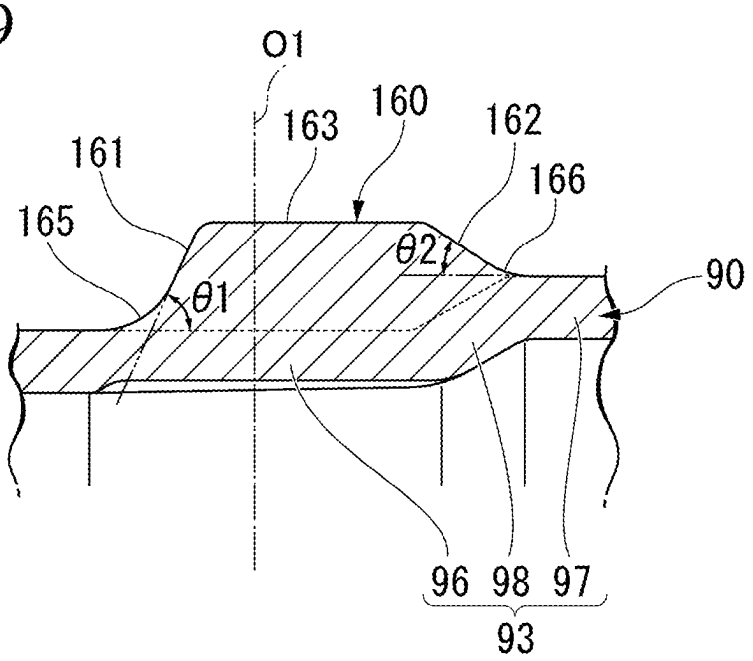
O1
160
163
162
161
166
165
θ2
θ1
90
96
98
97
93

FIG. 10

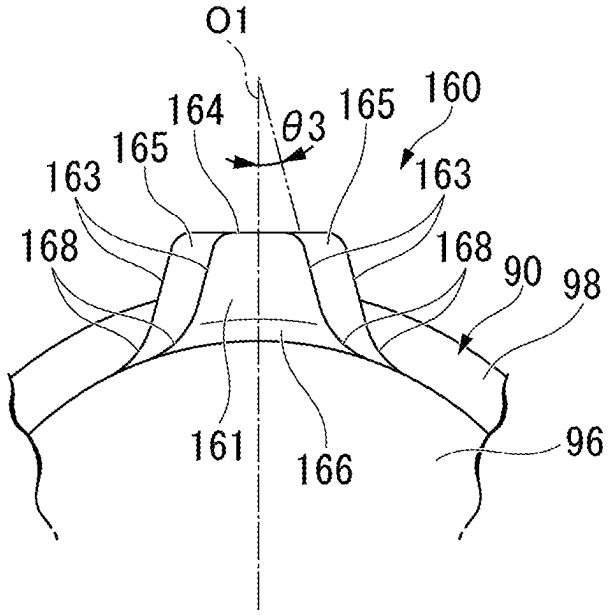
O1
164
θ3
165
160
165
163
163
168
168
90
98
161
166
96

FIG. 11

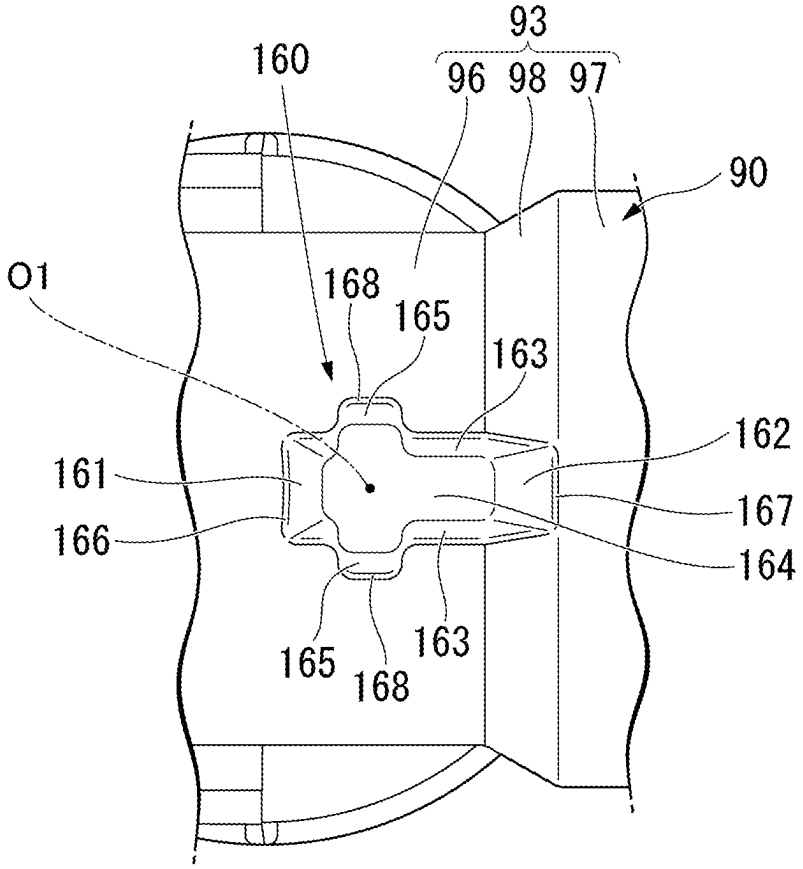

FIG. 12

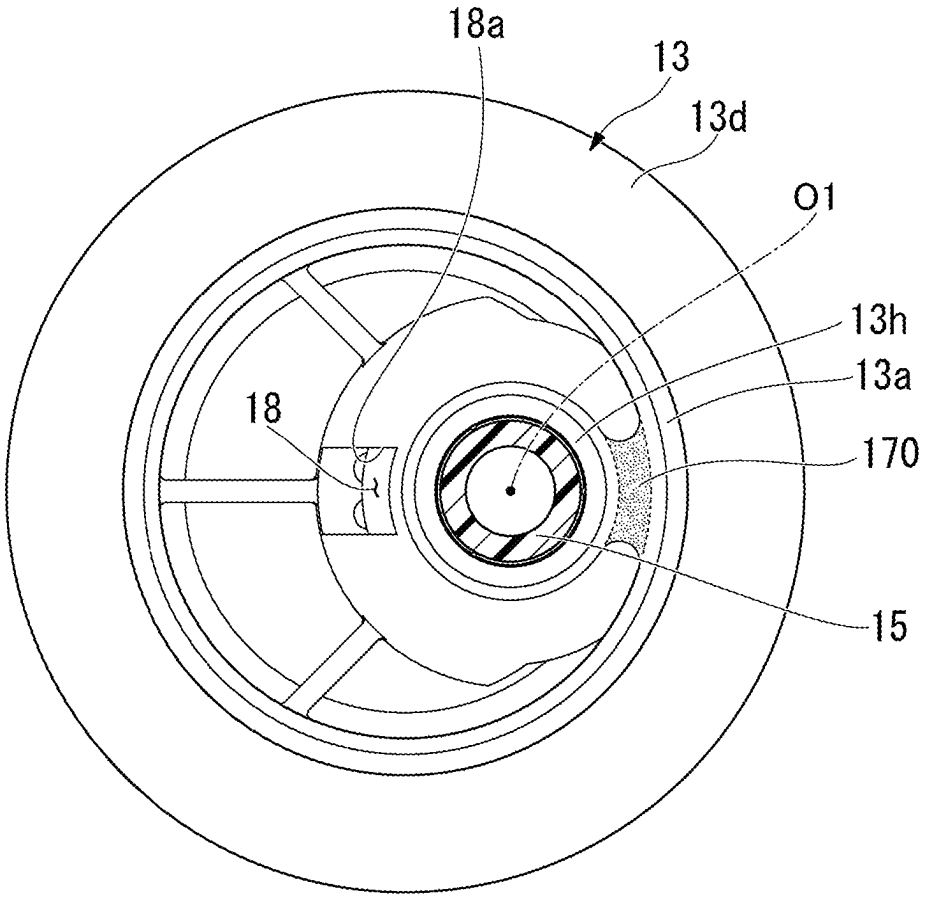

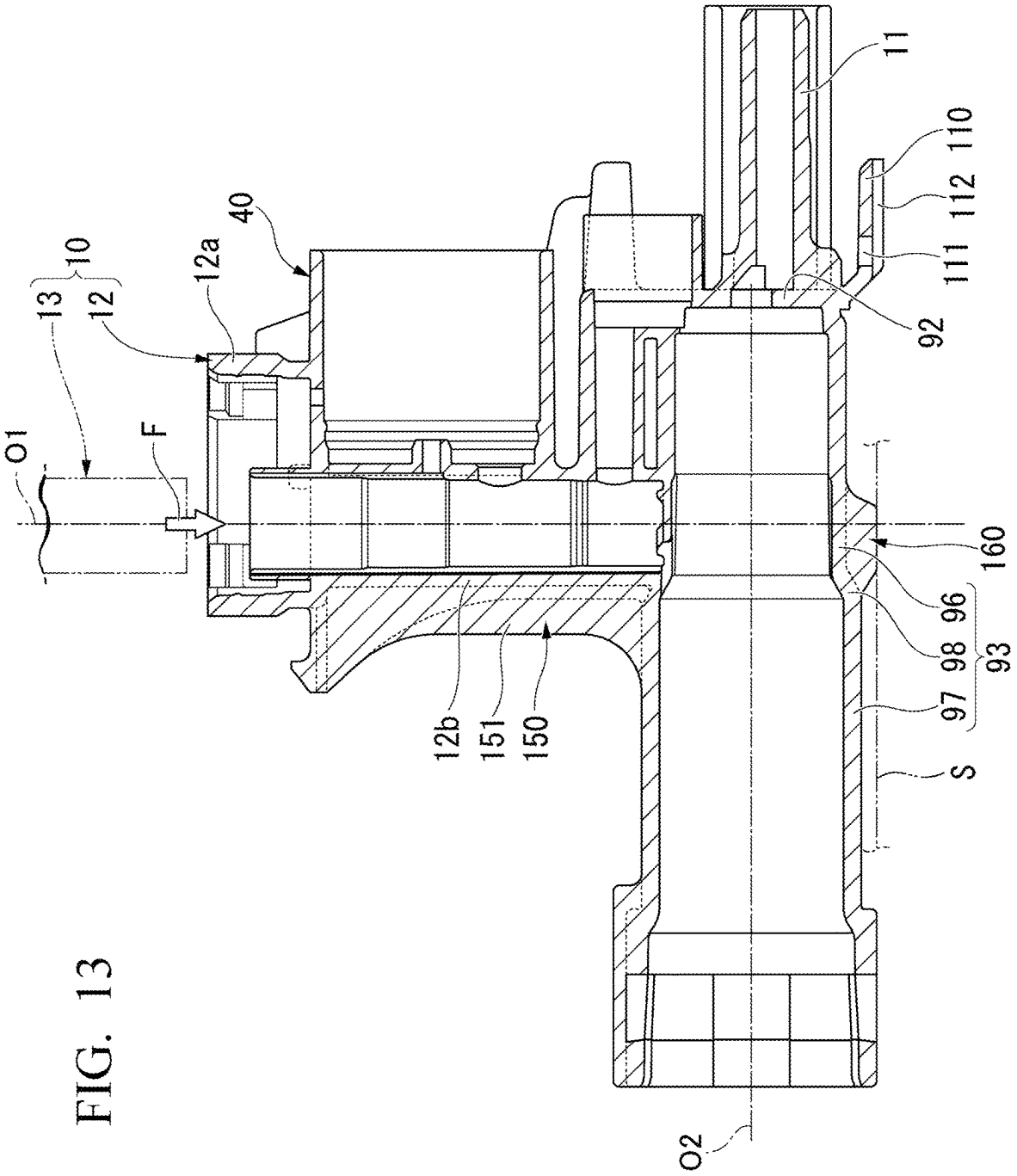
O1
F
13
10
12
12a
40
12b
151
150
11
110
112
111
92
160
96
98
93
97
S
O2

FIG. 13

TRIGGER-TYPE LIQUID SPRAYER

TECHNICAL FIELD

The present invention relates to a trigger-type liquid sprayer.

Priority is claimed on Japanese Patent Application No. 2020-199026, filed Nov. 30, 2020, and Japanese Patent Application No. 2020-217401, filed Dec. 25, 2020, the contents of which are incorporated herein by reference.

BACKGROUND ART

A trigger-type liquid sprayer sucking up a liquid from the inside of a container body and spraying the liquid through a spray hole by operating a trigger portion is known.

Regarding this kind of trigger-type liquid sprayer, for example, as disclosed in the following Patent Document 1, a trigger-type liquid sprayer including a sprayer main body which is mounted on a container body configured to accommodate a liquid therein, and a nozzle member having a spray hole for spraying a liquid is known.

The sprayer main body mainly includes a vertical supply tube sucking up a liquid inside the container body, a trigger portion disposed to be movable rearward in a state in which the trigger portion is biased forward and configured to cause the liquid to flow toward the spray hole through the inside of the vertical supply tube in response to rearward movement of the trigger portion, a reservoir cylinder into which a liquid that has passed through the inside of the vertical supply tube is supplied in response to rearward movement of the trigger portion, and a reservoir plunger movably disposed inside the reservoir cylinder and configured to move rearward in response to supply of the liquid into the reservoir cylinder while being biased forward by a bias member.

In the trigger-type liquid sprayer described above, a liquid can be sprayed to the outside through the spray hole while a liquid is reserved inside the reservoir cylinder by operating the trigger portion, and even when the trigger portion is not operated, a liquid can be sprayed utilizing the reservoir plunger. Accordingly, continuous injection of a liquid can be performed.

CITATION LIST

Patent Document

[Patent Document 1]
Japanese Unexamined Patent Application, First Publication No. 2017-213497

SUMMARY OF INVENTION

Technical Problem

A trigger-type liquid sprayer provided with the reservoir cylinder described above may be elongated in a forward/rearward direction in order to secure a sufficient internal volume (internal capacity) of the reservoir cylinder. Specifically, the reservoir cylinder may be formed above a vertical supply tube and extend rearward beyond the vertical supply tube. Since the reservoir cylinder protrudes rearward beyond the vertical supply tube, an external force is likely to act on the reservoir cylinder due to a drop impact, external contact, or the like.

Particularly, when the trigger-type liquid sprayer is dropped, since the reservoir cylinder is positioned above the vertical supply tube, the reservoir cylinder is likely to face downward so that a drop impact acts on the reservoir cylinder. For this reason, there is a possibility that the reservoir cylinder may be displaced (deformed) such that the reservoir cylinder is folded starting from a connected portion between the reservoir cylinder and the vertical supply tube due to a rotation torque or the like caused by a drop impact, resulting in a possibility of breakage of the reservoir cylinder.

The present invention has been made in consideration of such circumstances, and an object thereof is to provide a trigger-type liquid sprayer having exceptional impact resistance.

Solution to Problem

According to an aspect of the present invention, there is provided a trigger-type liquid sprayer including a sprayer main body mounted on a container body configured to accommodate a liquid therein, and a nozzle member having a spray hole for spraying a liquid forward, the nozzle member being mounted on a front end portion of the sprayer main body, in which the sprayer main body includes a vertical supply tube extending in an upward/downward direction and configured to suck up the liquid in the container body, a trigger mechanism having a trigger portion disposed in front of the vertical supply tube to be movable rearward in a state in which the trigger portion is biased forward, the trigger mechanism being configured to cause the liquid to flow from an inside of the vertical supply tube toward the spray hole in response to rearward movement of the trigger portion, a reservoir cylinder into which a liquid that has passed through the inside of the vertical supply tube is supplied in response to rearward movement of the trigger portion, and a reservoir plunger disposed inside the reservoir cylinder to be movable in an axial direction along a center axis of the reservoir cylinder, and configured to move toward one side in the axial direction in response to supply of the liquid into the reservoir cylinder while being biased toward the other side in the axial direction, the reservoir cylinder is disposed above the vertical supply tube, intersects a center axis of the vertical supply tube, and protrudes rearward beyond the vertical supply tube, and a displacement curbing portion is provided between a rear cylinder portion of the reservoir cylinder protruding rearward beyond the vertical supply tube and the vertical supply tube, the displacement curbing portion being configured to curb displacement of the rear cylinder portion with respect to the vertical supply tube.

In this case, as the trigger portion is operated to be moved rearward, a liquid can be caused to flow from the inside of the vertical supply tube toward the spray hole. Accordingly, a liquid can be sprayed forward through the spray hole of the nozzle member.

Moreover, while a liquid is supplied to the inside of the reservoir cylinder through the inside of the vertical supply tube, a liquid can be sprayed through the spray hole and the inside of the reservoir cylinder can be compressed. Therefore, the reservoir plunger can be pushed toward one side in the axial direction against forward biasing, and the reservoir plunger can be moved toward one side in the axial direction while a liquid is sprayed. For this reason, every time an operation of pulling the trigger portion is performed, a liquid can be sprayed while the reservoir plunger is moved to one side in the axial direction to store (fill) a liquid inside the reservoir cylinder.

If an operation of the trigger portion is stopped after the inside of the reservoir cylinder is filled with a liquid, supply

of a liquid to the inside of the reservoir cylinder through the inside of the vertical supply tube stops, but the reservoir plunger begins to move back toward the other side in the axial direction. Accordingly, a liquid filling the inside of the reservoir cylinder can be pressed out from the inside of the reservoir cylinder toward the spray hole and can be sprayed through the spray hole. Therefore, continuous spraying of a liquid can be performed.

Particularly, the displacement curbing portion for curbing displacement of the rear cylinder portion with respect to the vertical supply tube is provided between the rear cylinder portion of the reservoir cylinder and the vertical supply tube. Therefore, for example, even if an external force such as an impact due to a drop or an impact due to contact with the outside acts on the reservoir cylinder, displacement (deformation) of the rear cylinder portion, for example, in the upward/downward direction can be curbed. For example, even if an external force acts on the reservoir cylinder due to a drop impact or the like, by providing the displacement curbing portion, displacement in which the rear cylinder portion is folded in the upward/downward direction starting from a connected portion between the rear cylinder portion and the vertical supply tube due to a rotation torque or the like caused by the external force can be curbed. Accordingly, the rigidity against an unexpected external force can be enhanced, and the impact resistance of the trigger-type liquid sprayer can be improved.

As a result, a high-quality trigger-type liquid sprayer having a high rigidity against a drop impact, a contact impact, and the like can be obtained. Moreover, since the impact resistance can be improved, a larger internal volume (internal capacity) inside the reservoir cylinder can be secured, for example, by forming the rear cylinder portion to extend rearward beyond the vertical supply tube. Accordingly, more liquid can be reserved inside the reservoir cylinder and a trigger-type liquid sprayer suitable for continuous injection can be obtained.

The displacement curbing portion may include a reinforcement rib formed integrally with the vertical supply tube and the rear cylinder portion such that the vertical supply tube and the rear cylinder portion are integrally connected to each other.

In this case, since the vertical supply tube and the rear cylinder portion are integrally connected to each other by the reinforcement rib formed integrally with the vertical supply tube and the rear cylinder portion, the rigidity of the connected portion between the vertical supply tube and the rear cylinder portion can be effectively enhanced. For this reason, even when an external force such as a drop impact or the like acts on the reservoir cylinder, displacement of the rear cylinder portion in the upward/downward direction starting from the connected portion between the rear cylinder portion and the vertical supply tube can be more effectively curbed.

Particularly, it is possible to effectively curb both displacement in which the rear cylinder portion is pressed downward and displacement in which the rear cylinder portion is lifted upward starting from the connected portion between the rear cylinder portion and the vertical supply tube due to an external force acting on the reservoir cylinder.

The displacement curbing portion may include a reinforcement body mounted on the vertical supply tube and the rear cylinder portion, and the reinforcement body may include a first reinforcement body mounted on the vertical supply tube from behind and holding the vertical supply tube, and a second reinforcement body formed integrally with the first reinforcement body, mounted on the rear cylinder portion from below, and holding the rear cylinder portion.

In this case, the entire rigidity can be enhanced by integrally assembling the vertical supply tube and the rear cylinder portion utilizing the reinforcement body provided separately from the vertical supply tube and the rear cylinder portion. Specifically, by mounting the first reinforcement body on the vertical supply tube from behind and mounting the second reinforcement body on the rear cylinder portion from below, the vertical supply tube and the rear cylinder portion are integrally connected to each other utilizing the reinforcement body so that the entire rigidity can be enhanced.

Particularly, since the separately provided reinforcement body is utilized, moldability of the vertical supply tube and the rear cylinder portion is unlikely to be affected, and reinforcement is realized while the performance of spraying a liquid is appropriately maintained, in addition, since the reinforcement body can be arbitrarily designed with a high degree of freedom, it is possible to effectively curb displacement of the rear cylinder portion.

The vertical supply tube may include an outer tube formed integrally with the reservoir cylinder, and an inner tube fitted into the outer tube, an upper rib protruding upward may be formed integrally on an outer circumferential surface of an upper end portion of the reservoir cylinder, the upper rib being positioned on the center axis of the vertical supply tube and extending in the axial direction, the upper rib may include a first wall surface facing the other side in the axial direction and inclined to extend toward one side in the axial direction and upward from the outer circumferential surface of the reservoir cylinder, a first curved surface part may be formed in a connected onion between the first wall surface and the outer circumferential surface of the reservoir cylinder, the first curved surface part being recessed toward one side in the axial direction in a side view of the reservoir cylinder, and the first curved surface part may have a recessed curved surface shape having a curvature radius of 1.5 mm or longer in a side view of the reservoir cylinder.

In this case, when the trigger-type liquid sprayer is assembled, since the upper rib is provided in the reservoir cylinder, the vertical supply tube and the reservoir cylinder can be accurately assembled with favorable setting properties.

That is, since the upper rib is formed on the outer circumferential surface of the upper end portion of the reservoir cylinder such that it is positioned on the center axis of the vertical supply tube, when the inner tube is fitted into the outer tube formed integrally with the reservoir cylinder by plugging or the like, a load transmitted front the inner tube to the reservoir cylinder can be appropriately received utilizing the upper rib.

Therefore, the vertical supply tube and the reservoir cylinder can be accurately assembled with favorable setting properties.

Moreover, the front wall surface of upper rib is an inclined surface inclined toward one side in the axial direction, instead of a vertical surface forming, for example, a right angle with respect to the outer circumferential surface of the reservoir cylinder. In addition to this, the first curved surface part is formed in the connected portion between the front wall surface and the outer circumferential surface of the reservoir cylinder. Accordingly, for example, even if an impact force due to a drop impact or contact with the outside acts on the reservoir cylinder and the reservoir cylinder is

displaced such that it is folded in the upward/downward direction due to a rotation torque or the like caused by this, occurrence of a flaw such as cracking in the connected portion between the reservoir cylinder and the front wall surface can be curbed. For example, if the first wall surface is perpendicularly connected to the outer circumferential surface of the reservoir cylinder, when the reservoir cylinder is displaced in the upward/downward direction due to a drop impact or the like, there is a possibility that cracking or the like may occur in the connected portion. On the contrary, since the first wall surface itself is an inclined surface and is connected to the outer circumferential surface of the reservoir cylinder with the first curved surface part therebetween, an impact force can be alleviated, and therefore the foregoing flaw is unlikely to occur.

Moreover, since the first curved surface part has a recessed curved surface shape having a curvature radius of 1.5 mm or longer, even if the reservoir cylinder is displaced in the upward/downward direction due to a drop impact or the like, occurrence of a flaw such as cracking in the connected portion between the reservoir cylinder and the first wall surface can be effectively curbed. When the curvature radius is 2 mm or longer, a greater effect may be exhibited.

From the above, the rigidity against an unexpected external force can be enhanced, and the impact resistance of the trigger-type liquid sprayer can be improved. As a result, a high-quality trigger-type liquid sprayer having high rigidity against a drop impact, a contact impact, or the like can be obtained. Moreover, since the impact resistance can be improved, a larger internal volume (internal capacity) inside the reservoir cylinder can be secured, for example, by forming the reservoir cylinder to extend toward one side in the axial direction beyond the vertical supply tube. Accordingly, more liquid can be reserved inside the reservoir cylinder and a trigger-type liquid sprayer suitable for continuous injection can be obtained.

An inclination angle of the first wall surface with respect to the outer circumferential surface of the reservoir cylinder may be 45 degrees or larger in a side view of the reservoir cylinder.

In this case, since the first wall surface is inclined at an inclination angle of 45 degrees or larger and smaller than 90 degrees with respect to the outer circumferential surface of the reservoir cylinder, the rib height of the upper rib can be secured, and the rigidity of the upper rib can be further enhanced. Therefore, at the time of assembling, a load transmitted from the inner tube to the reservoir cylinder can be more reliably received utilizing the upper rib, and the vertical supply tube and an auxiliary cylinder can be accurately assembled with more favorable setting properties. In addition to this, since the rigidity of the upper rib can be enhanced, occurrence of a flaw such as cracking in the connected portion between the reservoir cylinder and the first wall surface can be effectively curbed.

The upper rib may include a second wall surface facing one side in the axial direction and inclined to extend toward the other side in the axial direction and upward from the outer circumferential surface of the reservoir cylinder, and a second curved surface part may be formed in a connected portion between the second wall surface and the outer circumferential surface of the reservoir cylinder, the second curved surface part being recessed toward the other side in the axial direction in a side view of the reservoir cylinder.

In this case, the upper rib is formed such that both of the first wall surface facing the other side in the axial direction and the second wall surface facing one direction side in the axial direction are inclined surfaces, the first curved surface part is formed between the first wall surface and the outer circumferential surface of the reservoir cylinder, and the second curved surface part is formed between the second wall surface and the outer circumferential surface of the reservoir cylinder. Therefore, for example, even if the reservoir cylinder is displaced to any side in the upward/downward direction due to a drop impact or the like, occurrence of a flaw such as cracking in the upper rib can be more effectively curbed, and the strength of the upper rib against an impact force can be enhanced.

Advantageous Effects of Invention

According to the trigger-type liquid sprayer of the present invention, an impact resistance can be improved.

BRIEF DESCRIPTION OF DRAWINGS

FIG. **1** is a longitudinal cross-sectional view illustrating a first embodiment of a trigger-type liquid sprayer according to the present invention.

FIG. **2** is an enlarged longitudinal cross-sectional view of a periphery of a reservoir plunger of the trigger-type liquid sprayer illustrated in FIG. **1**.

FIG. **3** is view illustrating a modification example of the first embodiment of the trigger-type liquid sprayer and is a side view of a periphery of a connected portion between a vertical supply tube and the reservoir plunger.

FIG. **4** is a longitudinal cross-sectional view of the trigger-type liquid sprayer illustrated in FIG. **3**.

FIG. **5** is a longitudinal cross-sectional view illustrating another modification example of the first embodiment of the trigger-type liquid sprayer.

FIG. **6** is a longitudinal cross-sectional view illustrating a second embodiment of a trigger-type liquid sprayer according to the present invention.

FIG. **7** is an enlarged longitudinal cross-sectional view of a periphery of a reservoir cylinder and the reservoir plunger illustrated in FIG. **6**.

FIG. **8** is an enlarged longitudinal cross-sectional view of a periphery of an inner tube and a pipe illustrated in FIG. **6**.

FIG. **9** is an enlarged longitudinal cross-sectional view of an upper rib illustrated in FIG. **6**.

FIG. **10** is a front view of the upper rib illustrated in FIG. **9**.

FIG. **11** is a plan view of the upper rib illustrated in FIG. **9** viewed from above.

FIG. **12** is a plan view of the inner tube illustrated in FIG. **8** viewed from below.

FIG. **13** is a view when the inner tube is fitted into an outer tube formed integrally with the reservoir cylinder during assembling of the trigger-type liquid sprayer illustrated in FIG. **6**.

DESCRIPTION OF EMBODIMENTS

First Embodiment

Hereinafter, a first embodiment of a trigger-type liquid sprayer according to the present invention will be described with reference to FIGS. **1** and **2**. In the present embodiment, a spray container in which a trigger-type liquid sprayer is attached to a container body will be described as an example.

As illustrated in FIG. **1**, a trigger-type liquid sprayer **1** of the present embodiment includes a sprayer main body **2**

which is mounted on a container body A accommodating a liquid therein, and a nozzle member **3** having a spray hole **4** for spraying a liquid and mounted on the sprayer main body **2**.

Unless otherwise specified, each constituent component, of the trigger-type liquid sprayer **1** is a molded article using a synthetic resin.

(Sprayer Main Body)

The sprayer main body **2** mainly includes a vertical supply tube **10**, a mounting cap **14**, an injection tube portion **11**, a trigger mechanism **50**, a reservoir cylinder **90**, a support member **60**, a reservoir plunger **80**, a bias member **81**, a ball valve **19**, a reservoir valve **20**, and a cover body **100**.

In the present embodiment, a center axis of the vertical supply tube **10** will be referred to as an axis O**1**, a side of the container body A along the axis O**1** will be referred to as a lower side, a side opposite thereto will be referred to as an upper side, and a direction along the axis O**1** will be referred to as an upward/downward direction. In addition, in a plan view in the upward/downward direction, one direction intersecting the axis O**1** will be referred to as a forward/rearward direction, and a direction orthogonal to both of the upward/downward direction and the forward/rearward direction will be referred to as a leftward/rightward direction.

Moreover, in the present embodiment, a center axis of the reservoir cylinder **90** will be regarded as an axis O**2**. In the present embodiment, the axis O**2** extends in the forward/rearward direction. Therefore, in the present embodiment, the forward/rearward direction corresponds to an axial direction along the center axis (if the reservoir cylinder **90**.

In addition, in the present embodiment, a rear side corresponds to one side in the axial direction along the center axis of the reservoir cylinder **90**, and a front side corresponds to the other side in the axial direction along the center axis of the reservoir cylinder **90**. However, the axial direction along the axis O**2** may not coincide with the forward/rearward direction.

The vertical supply tube **10** extends in the upward/downward direction and sucks up a liquid inside the container body A. The vertical supply tube **10** has an outer tube **12** having a topped cylindrical shape, and an inner tube **13** fitted into the outer tube **12**. The axis O**1** of the vertical supply tube **10** constituted of the outer tube **12** and the inner tube **13** is positioned behind a container axis of the container body A.

The outer tube **12** has a large diameter portion **12***a*, a small diameter portion **12***b* disposed above the large diameter portion **12***a* and having a diameter smaller than the large diameter portion **12***a*, and an annular connection portion **12***c* connecting an upper end portion of the large diameter portion **12***a* and a lower end portion of the small diameter portion **12***b* to each other.

The upper end portion of the large diameter portion **12***a* has a diameter smaller than a part of the large diameter portion **12***a* positioned below the upper end portion. Therefore, an outer circumferential surface of the upper end portion of the large diameter portion **12***a* is recessed throughout the entire circumference of the large diameter portion **12***a*, and no projection rib or the like is provided thereon. The small diameter portion **12***b* has a topped cylindrical shape and is located coaxially with the axis O**1**. As illustrated in FIG. **2**, a top wall portion **12***d* of the small diameter portion **12***b* is formed integrally with the reservoir cylinder **90**. Accordingly, the outer tube **12** of the vertical supply tube **10** is formed integrally with the reservoir cylinder **90**.

As illustrated in FIG. **1**, the inner tube **13** has a large diameter portion **13***a*, a small diameter portion **13***b* disposed above the large diameter portion **13***a* and having a diameter smaller than the large diameter portion **13***a*, and an annular connection portion **13***c* connecting an upper end portion of the large diameter portion **13***a* and a lower part of the small diameter portion **13***b* to each other. The small diameter portion **13***b* is disposed radially inside the large diameter portion **13***a*. The annular connection portion **13***c* connects an inner circumferential surface of the large diameter portion **13***a* and an outer circumferential surface of the small diameter portion **13***b* to each other in the radial direction.

The large diameter portion **13***a* is located inside the large diameter portion **12***a* of the outer tube **12**. The upper end portion of the large diameter portion **13***a* is fitted into the upper end portion of the large diameter portion **12***a* of the outer tube **12**. The upper end portion of the large diameter portion **13***a* comes into surface-contact with an inner circumferential surface of the large diameter portion **12***a* of the outer tube **12** throughout the entire circumference. Accordingly, a part between an outer circumferential surface of the upper end portion of the large diameter portion **13***a* and the inner circumferential surface of the upper end portion of the large diameter portion **12***a* of the outer tube **12** is sealed (so-called surface sealing) throughout the entire circumference.

A lower end portion of the large diameter portion **13***a* protrudes downward from the large diameter portion **12***a* of the outer tube **12**. The lower end portion of the large diameter portion **13***a* is fitted into a mouth portion A**1** of the container body A. An annular rim portion **13***d* protruding outward in the radial direction of the large diameter portion **13***a* is formed on a part of the large diameter portion **13***a* protruding downward from the large diameter portion **12***a* of the outer tube **12**. The rim portion **13***d* is located inside an upper end portion of the mounting cap **14** mounted (for example, screwed) on the mouth portion A**1** of the container body A and interlocks the upper end portion of the mounting cap **14** so as to be rotatable around the axis thereof. The rim portion **13***d* is interposed between the upper end portion of the mounting cap **14** and an upper end opening edge of the mouth portion A**1** of the container body A in the upward/downward direction.

The small diameter portion **13***b* is located coaxially with the axis O**1** and has a cylindrical shape opening on both sides in the upward/downward direction. The small diameter portion **13***b* is located inside, the small diameter portion **12***b* of the outer tube **12**. An upper end opening edge of the small diameter portion **13***b* is slightly separated downward from the top wall portion **12***d* of the outer tube **12**. An upper portion of a pipe **15** extending in the upward/downward direction and sucking up a liquid from the container body A is fitted into the lower part of the small diameter portion **13***b*. A lower opening section of the pipe **15** is positioned in a bottom portion (not illustrated) of the container body A.

A gap S**1** in the upward/downward direction is provided between an upper surface of the annular connection portion **13***c* and a lower surface of the annular connection portion **12***c* of the outer tube **12**.

As illustrated in FIG. **2**, a valve seat portion **13***e* is formed on the inner circumferential surface of the inner tube **13**. In the illustrated example, the valve seat portion **13***e* is formed by a step obtained by making the inner diameter of a part of the inner tube **13** positioned above the valve seat portion **13***e* larger than the inner diameter of a part of the inner tube **13**

positioned below the valve seat portion **13***e*. The reservoir valve **20** is seated on an upper surface of the valve seat portion **3***e*.

As illustrated in FIG. **1**, a support tube portion **16** having a cylindrical shape is provided on a part of the inner circumferential surface of the inner tube **13** positioned below the valve seat portion **13***e* and above the upper end portion of the pipe **15**. The outer diameter of the support tube portion **16** is smaller than the inner diameter of the inner tube **13**. The support tube portion **16** is located coaxially with the axis O**1** and protrudes upward from the inner circumferential surface of the inner tube **13**. The ball valve **19** is disposed on an upper end opening edge of the support tube portion **16** so as to be separable upward from the upper end opening edge.

A recovery path **17** is provided between the outer tube **12** and the inner tube **13** and positioned behind the axis O**1**. The recovery path **17** extends in the upward/downward direction and opens upward, and a downward side of the recovery path **17** is closed. That is, the recovery path **17** does not open downward.

Specifically, the recovery path **17** is a vertical groove formed on the inner circumferential surface of the small diameter portion **12***b* of the outer tube **12**. The recovery path **17** is provided in the small diameter portion **12***b* throughout the overall length in the upward/downward direction. A lower end portion of the recovery path **17** is closed from below by the annular connection portion **13***c* of the inner tube **13**. The lower end portion of the recovery path **17** communicates with a connection path **18** (which will be described below) through communication paths **17***a* (refer to FIG. **2**) and communicates with the inside of the container body A through a communication opening **18***a*.

For example, the recovery path **17** may be a vertical groove formed on the outer circumferential surface of the inner tube **13**. Moreover, the recovery path **17** may be formed by combining vertical grooves respectively formed in the outer tube **12** and the inner tube **13**.

The communication paths **17***a* are provided between the outer tube **12** and the inner tube **13**. The communication paths **17***a* extend in a circumferential direction of the vertical supply tube **10** from the recovery path **17** and allow the recovery path **17** and the connection path **18** (which will be described below) to communicate with each other and. The communication paths **17***a* extend forward from the lower end portion of the recovery path **17** and are connected to the connection path **18**. For example, the communication path **17***a* has a circular arc shape. Two communication paths **17***a* are provided with the axis O**1** interposed therebetween in the radial direction.

The communication paths **17***a* are circumferential grooves formed on the inner circumferential surface of the small diameter portion **12***b* of the outer tube **12** and extending in the circumferential direction. For example, the communication paths **17***a* may be circumferential grooves formed on the inner circumferential surface of the inner tube **13**. Moreover, the communication paths **17***a* may be formed by combining circumferential grooves respectively formed in the outer tube **12** and the inner tube **13**.

The communication paths **17***a* communicate with the inside of the container body A through the communication opening **18***a* (which will be described below). The communication paths **17***a* do not open downward (toward the inside of the container body A) at a part other than the communication opening **18***a*.

As illustrated in FIGS. **1** and **2**, a connection tube portion **30** extending forward is provided in an upper end portion of the vertical supply tube **10**.

The connection tube portion **30** has a bottomed cylindrical shape opening forward and having a rear side closed. A bottom portion **31** of the connection tube portion **30** is formed integrally with the upper end portion of the outer tube **12**. A penetration hole **31***a* penetrating the bottom portion **31** in the forward/rearward direction is formed in the bottom portion **31**.

The penetration hole **31***a* opens toward a penetration hole **13***f* formed in the upper end portion of the inner tube **13**. The penetration hole **13***f* is formed in a part of the small diameter portion **13***b* positioned above the valve seat portion **13***e* in the inner tube **13**. Accordingly, the inside of the connection tube portion **30** communicates with the inside of a part of the inner tube **13** positioned above the valve seat portion **13***e* through the penetration hole **31***a* and the penetration hole **13***f*.

The inner diameter of the connection tube portion **30** is equal to or larger than the inner diameter of the inner tube **13**. In addition, a closing plug **32** is tightly fitted into a front end portion of the connection tube portion **30**.

The closing plug **32** includes a plug main body **32***a* and a flange portion **32***b*.

The plug main body **32***a* has a bottomed cylindrical shape opening forward and having a rear side closed and is tightly fitted into the front end portion of the connection tube portion **30**. Accordingly, the closing plug **32** closes a front opening section of the connection tube portion **30**.

The flange portion **32***b* projects outward from a front end opening edge of the plug main body **32***a*. The flange portion **32***b* abuts a front end opening edge of the connection tube portion **30** from the front when the plug main body **32***a* is mounted on the connection tube portion **30**.

As illustrated in FIG. **1**, a tube portion **40** for a cylinder is provided below the connection tube portion **30**.

The tube portion **40** for a cylinder protrudes forward from the small diameter portion **12***b* of the outer tube **12** and opens forward. A war part of a lower end portion of the tube portion **40** for a cylinder is formed integrally with the annular connection portion **12***c* of the outer tube **12**.

For example, lower ribs **46** are provided around the tube portion **40** for a cylinder.

The lower ribs **46** are formed to be laid across the tube portion **40** for a cylinder and the large diameter portion **12***a*. For example, the lower ribs **46** are provided at positions avoiding a part immediately below the tube portion **40** for a cylinder. A pair of lower ribs **46** are provided with an interval therebetween in a circumferential direction around an axis of the tube portion **40** for a cylinder. An upper end of each of the lower ribs **46** is connected to an outer circumferential surface of the tube portion **40** for a cylinder, and a rear end of each of the lower ribs **46** is connected to the outer circumferential surface of the large diameter portion **12***a*. The lower ribs **46** may be provided immediately below the tube portion **40** for a cylinder.

A fitting tube portion **41** protruding forward from the small diameter portion **12***b* of the outer tube **12** and opening forward is provided inside the tube portion **40** for a cylinder.

The fitting tube portion **41** is located coaxially with the tube portion **40** for a cylinder. A front end portion of the fitting tube portion **41** is positioned behind a front end portion of the tube portion **40** for a cylinder.

The connection path **18** extending in the upward/downward direction is formed between the inner circumferential surface of the outer tube **12** and the outer circumferential

surface of the inner tube **13**. The connection path **18** is separated from the recovery path **17** around the axis O1 and is positioned in front of the recovery path **17** and the axis O1. Specifically, the connection path **18** is disposed in a front end portion of the vertical supply tube **10**.

An upper end portion of the connection path **18** is positioned behind the fitting tube portion **41**. A lower end portion of the connection path **18** communicates with the inside of the container body A through the communication opening **18***a* formed in the annular connection portion **13***c* of the inner tube **13**.

Accordingly, the connection path **18** allows the inside of the fitting tube portion **41** and the inside of the container body A to communicate with each other through the communication opening **18***a* and the inside of the large diameter portion **13***a*. The connection path **18** functions as a residual pressure release path for discharging air inside a main cylinder **53**. Moreover, the recovery path **17** communicates with the inside of the container body A through the communication paths **17***a*, the connection path **18**, and the communication opening **18***a*.

For example, the connection path **18** may be formed by a vertical groove formed on the outer circumferential surface of the inner tube **13** or may be formed by combining vertical grooves respectively formed in the outer tube **12** and the inner tube **13**.

The injection tube portion **11** extends in the forward/rearward direction and communicates with the inside of the vertical supply tube **10** through the inside of the reservoir cylinder **90** and the inside of the connection tube portion **30**. The injection tube portion **11** extends forward from a front wall portion **92** of the reservoir cylinder **90** and guides a liquid that has passed through the inside of the vertical supply tube **10** and the inside of the connection tube portion **30** to the spray hole **4**. The center axis of the injection tube portion **11** is disposed parallel to the axis O2. In the illustrated example, the center axis of the injection tube portion **11** is positioned above the axis O2 of the reservoir cylinder **90**.

The trigger mechanism **50** includes a trigger portion **51**, the main cylinder **53**, a main piston **52**, and a coil spring (bias member) **54**. The trigger mechanism **50** is configured to cause a liquid to flow from the inside of the vertical supply tube **10** toward the spray hole **4** in response to a rearward swing of the trigger portion **51**.

The trigger portion **51** is disposed in front of the vertical supply tube **10** and configured to be movable rearward in a state in which the trigger portion **51** is biased forward. The trigger portion **51** is formed to extend in the upward/downward direction and is disposed below the injection tube portion **11**.

An upper end portion of the trigger portion **51** is pivotally supported by the nozzle member **3** such that the trigger portion **51** is swingable in the forward/rearward direction. Specifically, the trigger portion **51** includes a main plate member **51***a* having a front surface curved in a shape recessed rearward in a side view in the leftward/rightward direction, and a pair of side plate members **51***b* standing up rearward from left and right side edge portions of the main plate member **51***a*.

A pair of connection plates **51***c* are formed in upper end portions of the pair of side plate members **51***b*, the pair of connection plates **51***c* extending upward to reach lateral portions of the nozzle member **3** and sandwiching the nozzle member **3** therebetween in the leftward/rightward direction. Rotary shaft portions **55** protruding outward in the leftward/rightward direction are provided on the pair of connecting plates **51***c*. The rotary shaft portions **55** are rotatably supported by bearing portions **56** provided on the lateral portions of the nozzle member **3**.

Accordingly, the trigger portion **51** is supported to be swingable in the forward/rearward direction about the rotary shaft portions **55**.

As illustrated in FIGS. **1** and **2**, the main cylinder **53** is disposed behind the trigger portion **51** and faces the trigger portion **51** in the forward/rearward direction. The main cylinder **53** has an outer tube portion **53***a* opening forward, a rear wall portion **53***b* closing a rear end opening of the outer tube portion **53***a*, a tubular piston guide **53***c* protruding forward from a center part of the rear wall portion **53***b*, and a tubular communication tube portion **53***d* protruding rearward from a part of the rear wall portion **53***b* positioned above the piston guide **53***c* and opening on both sides in the forward/rearward direction.

The outer tube portion **53***a* is disposed coaxially with the tube portion **40** for a cylinder and is fitted into the tube portion **40** for a cylinder. An inner circumferential surface of the tube portion **40** for a cylinder and an outer circumferential surface of the outer tube portion **53***a* are in tight-contact with each other in both end portions in the forward/rearward direction. An annular gap S2 is provided between the inner circumferential surface of the tube portion **40** for a cylinder and the outer circumferential surface of the outer tube portion **53***a*, the annular gap S2 being positioned in an intermediate portion between the above described both end portions in the forward/rearward direction.

A first vent hole **53***g* allowing the inside of the outer tube portion **53***a* and the gap S2 to communicate with each other is formed in the outer tube portion **53***a*. As illustrated in FIG. **1**, a second vent hole **12***f* allowing the gap S2 and the gap S1 between the annular connection portion **12***c* of the outer tube **12** and the annular connection portion **13***c* of the inner tube **13** to communicate with each other is formed in the annular connection portion **12***c* of the outer tube **12**. Moreover, a third vent hole **13***g* allowing the gap S1 and the inside of the mounting cap **14** to communicate with each other is formed in the annular connection portion **3***c* of the inner tube **13**.

The communication tube portion **53***d* is fitted into the penetration holes formed in the outer tube **12** and the inner tube **13**. The inside of the inner tube **13** of the vertical supply tube **10** and the inside of the main cylinder **53** communicate with each other through the inside of the communication tube portion **53***d*. A war end portion of the communication tube portion **53***d* protrudes into the inner tube **13**.

The penetration hole of the inner tube **13** into which the communication tube portion **53***d* is fitted opens in a part of the small diameter portion **13***b* of the inner tube **13** positioned between the valve seat portion **13***e* and the support tube portion **16**. Therefore, the ball valve **19** separably seated on the upper end opening edge of the support tube portion **16** can switch to bring the inside of the container body A and the inside of the main cylinder **53** in communication with each other and block the communication.

The ball valve **19** is a check valve blocking communication between the inside of the container body A and the inside of the main cylinder **53** through the inside of the vertical supply tube **10** when the inside of the main cylinder **53** is compressed, and allowing communication between the inside of the container body A and the inside of the main cylinder **53** through the inside of the vertical supply tube **10** by being displaced upward when the inside of the main cylinder **53** is decompressed.

Since the reservoir valve **20** is disposed above the ball valve **19**, excessive upward displacement of the ball valve **19** is restricted by the reservoir valve **20**. Excessive upward displacement of the ball valve **19** may be restricted by the rear end portion of the communication tube portion **53***d*.

The piston guide **53***c* has a bottomed cylindrical shape opening forward and having a rear side closed and is disposed inside the outer tube portion **53***a*. A front end portion of the piston guide **53***c* is positioned behind a front end portion of the outer tube portion **53***a*. A bottom portion of the piston guide **53***c* has an annular shape, and the fitting tube portion **41** is fitted into the bottom portion. The front end portion of the fitting tube portion **41** protrudes into the piston guide **53***c*.

The piston guide **53***c* is located coaxially with the fitting tube portion **41**. An annular recessed portion **53***e* is formed on an outer circumferential surface of a rear end portion of the piston guide **53***c*.

The main piston **52** is disposed inside the main cylinder **53** and configured to be movable in the forward/rearward direction, and is moved in the forward/rearward direction in association with a swing of the trigger portion **51**. The inside of the main cylinder **53** is compressed and decompressed in response to movement of the main piston **52** in the forward/rearward direction.

The main piston **52** has a topped cylindrical shape opening rearward and having a front side closed and is located coaxially with the main cylinder **53**. The main piston **52** is interlocked with an intermediate portion of the trigger portion **51** in the upward/downward direction.

The main piston **52** is biased forward together with the trigger portion **51** due to a biasing force of the coil spring **54**. The main piston **52** moves rearward in response to a rearward swing of the trigger portion **51** and is thrust into the main cylinder **53**.

The main piston **52** has a piston main body portion **52***a* which opens rearward and into which the piston guide **53***c* is inserted, and a sliding tube portion **52***b* which protrudes outward in the radial direction of the piston main body portion **52***a* from a rear end portion of the piston main body portion **52***a* and comes into sliding-contact with an inner circumferential surface of the outer tube portion **53***a*.

The piston main body portion **52***a* has a topped cylindrical shape opening rearward and having a front side closed. The inner diameter of the piston main body portion **52***a* is slightly larger than the outer diameter of the piston guide **53***c*. A front end portion of the piston main body portion **52***a* abuts the trigger portion **51** from behind and is interlocked with the trigger portion **51**.

An annular inner lip portion **52***c* protruding inward in the radial direction of the piston main body portion **52***a* and coming into sliding-contact with an outer circumferential surface of the piston guide **53***c* is formed in the rear end portion of the piston main body portion **52***a*. Accordingly, sealability is secured between the inner lip portion **52***c* and the outer circumferential surface of the piston guide **53***c*.

When the main piston **52** moves rearward and the inner lip portion **52***c* reaches the recessed portion **53***e* of the piston guide **53***c*, a slight gap is formed between the inner lip portion **52***c* and the recessed portion **53***e*. Through this gap, the inside of the outer tube portion **53***a* of the main cylinder **53** communicates with a gap between an inner circumferential surface of the piston main body portion **52***a* and the outer circumferential surface of the piston guide **53***c*. Accordingly, the inside of the outer tube portion **53***a* communicates with the inside of the fitting tube portion **41** through the inside of the piston guide **53***c*.

The inner lip portion **52***c* reaches the recessed portion **53***e* when the main piston **52** is positioned at the rearmost position.

The sliding tube portion **52***b* has a diameter that is increased forward and rearward from a central portion in the forward/rearward direction. The sliding tube portion **52***b* has outer lip portions **52***d* positioned in both end portions thereof in the forward/rearward direction. The outer lip portions **52***d* conic into tight sliding-contact with the inner circumferential surface of the outer tube portion **53***a*. Accordingly, sealability is secured between the outer lip portions **52***d* and the inner circumferential surface of the outer tube portion **53***a*.

When the trigger portion **51** is at the foremost swing position, the main piston **52** is positioned at the foremost position corresponding thereto. At this time, the sliding tube portion **52***b* closes the first vent hole **53***g* formed in the outer tube portion **53***a*.

Further, when the main piston **52** moves rearward from the foremost position by a predetermined amount in response to a rearward swing of the trigger portion **51**, the sliding tube portion **52***b* opens the first vent hole **53***g*. Accordingly, the first vent hole **53***g* is opened to the outside of the trigger-type liquid sprayer **1** through the inside of the outer tube portion **53***a*.

According to this, the inside of the container body A can communicate with the outside of the trigger-type liquid sprayer **1** through the third vent hole **13***g* formed in the annular connection portion **13***c* of the inner tube **13**, the gap S**1**, the second vent hole **12***f*, the gap S**2**, and the first vent hole **53***g*.

The coil spring (bias member) **54** is made of a metal, is located coaxially with the main piston **52** and the main cylinder **53**, and biases the trigger portion **51** forward via the main piston **52**.

The coil spring **54** is disposed to straddle the inside of the piston guide **53***c* and the inside of the piston main body portion **52***a*. A rear end portion of the coil spring **54** is supported by the bottom portion (rear wall portion **53***b*) of the piston guide **53***c* in a state of surrounding the front end portion of the fitting tube portion **41**. A front end portion of the coil spring **54** is supported by a stepped surface which is formed inside the piston main body portion **52***a* and faces the rear side.

A material of the coil spring **54** is not limited to a metal, and a resin spring or the like may be employed, for example.

A stopper T is provided in a gap in the forward/rearward direction between the trigger portion **51** and the main cylinder **53** in an attachable/detachable manner.

The stopper T is a restriction member restricting a rearward swing of the trigger portion **51** by abutting the trigger portion **51** and the main cylinder **53**. A user may discard the detached stopper T or may reattach the stopper T after using the trigger-type liquid sprayer **1** to restrict a rearward swing of the trigger portion **51**.

As illustrated in FIGS. **1** and **2**, the reservoir cylinder **90** is disposed above the vertical supply tube **10** and the connection tube portion **30**. A liquid that has passed through the inside of the vertical supply tube **10** and the inside of the connection tube portion **30** is supplied to the inside of the reservoir cylinder **90** in response to a rearward swing of the trigger portion **51**. The reservoir cylinder **90** extends in the forward/rearward direction to straddle the vertical supply tube **10** in the forward/rearward direction and is disposed substantially parallel to the connection tube portion **30** and the tube portion **40** for a cylinder in the illustrated example. A lower end portion of the reservoir cylinder **90** is formed

integrally with the upper end portion of the vertical supply tube **10** and an upper end portion of the connection tube portion **30**.

The reservoir cylinder **90** includes the front wall portion **92** positioned at the front end and a cylinder tube **93** extending rearward from the front wall portion **92**, and the entirety of the reservoir cylinder **90** has a topped cylindrical shape opening rearward and having a front side closed.

The front wall portion **92** protrudes upward from an intermediate pan of the connection tube portion **30** in the forward/rearward direction. A communication hole **95** penetrating the front wall portion **92** in the forward/rearward direction is formed in the front wall portion **92**. The communication hole **95** has a circular shape and is located coaxially with the axis O**2**. Accordingly, a storage space **90***a* (which will be described below) inside the reservoir cylinder **90** and the inside of the injection tube portion **11**, which communicates with the spray hole **4**, communicate with each other through the communication hole **95**. The communication hole **95** may be formed in the cylinder tube **93**.

The cylinder tube **93** has a front tube portion **96** extending rearward from the front wall portion **92**, a rear tube portion **97** having an outer diameter and an inner diameter larger than those of the front tube portion **96** and positioned behind the front tube portion **96**, and a stepped portion **98** connecting the front tube portion **96** and the rear tube portion **97** to each other in the forward/rearward direction.

The stepped portion **98** has a diameter that is increased rearward from the front. The top wall portion **12***d* of the outer tube **12** is connected to a connected portion between the front tube portion **96** and the stepped portion **98**. More specifically, the top wall portion **12***d* of the outer tube **12** is connected to a part, of the connected portion between the front tube portion **96** and the stepped portion **98**, positioned at a lower part of the cylinder tube **93**.

The rear tube portion **97** is positioned behind the vertical supply tube **10**. For this reason, the rear tube portion **97** functions as a rear cylinder portion protruding rearward beyond the vertical supply tube **10** in the reservoir cylinder **90**. The rear tube portion **97** is formed integrally with the upper end portion of the vertical supply tube **10**.

Moreover, a supply hole **91**, communication grooves **94**, and a recovery hole **99** are formed in the reservoir cylinder **90**.

The supply hole **91** is formed at a lower part of the front end portion of the front tube portion **96** and opens in a part of the connection tube portion **30** positioned behind the plug main body **32***a*. Accordingly, a liquid that has passed through the inside of the vertical supply tube **10** and the inside of the connection tube portion **30** is supplied to the inside of the reservoir cylinder **90** through the supply hole **91**.

The communication grooves **94** are formed on an inner circumferential surface of a rear portion of the front tube portion **96**. A plurality of communication grooves **94** are disposed with an interval therebetween around the axis O**2**.

The recovery hole **99** penetrates the connected portion between the front tube portion **96** and the stepped portion **98** and the top wall portion **12***d* of the outer tube **12**, which are integrally formed, in the upward/downward direction. The recovery hole **99** opens toward an upper end portion of the recovery path **17** provided in the vertical supply tube **10**. Accordingly, the recovery hole **99** communicates with the inside of the container body A through the recovery path **17**. A rear end portion of the communication groove **94** of the plurality of communication grooves **94** positioned on the lower side opens in a front end portion of the recovery hole **99**.

The support member **60** is fixed to a rear end portion of the reservoir cylinder **90** and is located coaxially with the axis O**2**. The support member **60** includes a support wall portion **62** positioned at the rear end and a fixed tube portion **61** extending forward from the support wall portion **62**, and the entirety of the support member **60** has a bottomed cylindrical shape opening forward and having, a rear side closed.

The fixed tube portion **61** is fitted into the rear end portion of the reservoir cylinder **90** in a state in which rearward movement and rotative movement around the axis O**2** are restricted. The support wall portion **62** has an annular shape. The inside of a part of the reservoir cylinder **90** positioned behind the reservoir plunger **80** communicates with the outside through the inside of the support wall portion **62**.

Interlock protrusions **63** protruding forward are formed in the support wall portion **62**. A plurality of interlock protrusions **63** are provided with an interval therebetween around the axis O**2** and are interlocked with the inside of interlock recesses **97***a* formed in the rear tube portion **97** from the front. Accordingly, rearward detachment of the fixed tube portion **61** from the reservoir cylinder **90** is restricted.

The reservoir plunger **80** is disposed inside the reservoir cylinder **90** and configured to be movable in the forward/rearward direction along the axis O**2**. The reservoir plunger **80** moves rearward in response to supply of a liquid to the inside of the reservoir cylinder **90**. The reservoir plunger **80** blocks communication between the inside of the vertical supply tube **10** and the spray hole **4** through the communication hole **95**, and when the reservoir plunger **80** moves rearward, the reservoir plunger **80** allows the inside of the vertical supply tube **10** and the spray hole **4** to communicate with each other through the communication hole **95**.

The reservoir plunger **80** has a slide member **24** sliding inside the reservoir cylinder **90** in the forward/rearward direction, and a reception member **33** fitted into the slide member **24**. The slide member **24** and the reception member **33** have a tubular shape extending in the forward/rearward direction and are located coaxially with the axis O**2**.

For example, the slide member **24** is formed of a material softer than those of the reception member **33** and the reservoir cylinder **90** and has a plunger tube **25** extending in the forward/rearward direction and a closing wall **26** closing a front end opening of the plunger tube **25**.

A front lip portion **25***a* and a rear lip portion **25***b* are formed on an outer circumferential surface of the plunger tube **25** throughout the whole circumference.

The front lip portion **25***a* closely slides on an inner circumferential surface of the front tube portion **96** of the cylinder tube **93** in the forward/rearward direction. Accordingly, sealability is secured between the front lip portion **25***a* and the inner circumferential surface of the front tube portion **96**.

Specifically, the front lip portion **25***a* has a cylindrical shape protruding forward from the outer circumferential surface of the plunger tube **25**. A gap is provided between an inner circumferential surface of the front lip portion **25***a* and an outer circumferential surface of the front end portion of the plunger tube **25**. Moreover, the front end portion of the plunger tube **25** positioned in front of the front lip portion **25***a* has a diameter smaller than a part of the plunger tube **25** positioned behind the front end portion. A gap is provided between the outer circumferential surface of the front end

portion of the plunger tube **25** and an inner circumferential surface of the reservoir cylinder **90**.

Further, the inside of the front lip portion **25***a* and the supply hole **91** formed in the reservoir cylinder **90** open in this gap. Therefore, this gap functions as the storage space **90***a* storing a liquid that has passed through the inside of the vertical supply tube **10** and expanding when the reservoir plunger **80** moves rearward in response to supply of the liquid.

The rear lip portion **25***b* closely slides on an inner circumferential surface of the rear tube portion **97** of the cylinder tube **93** in the forward/rearward direction. Accordingly, scalability is secured between the rear lip portion **25***b* and the inner circumferential surface of the rear tube portion **97**. The rear lip portion **25***b* has a cylindrical shape protruding forward from an outer circumferential edge of a rear end of the plunger tube **25**. A gap is provided between an inner circumferential surface of the rear lip portion **25***b* and the outer circumferential surface of the rear end portion of the plunger tube **25**.

The closing wall **26** is pressed against a rear surface of the front wall portion **92** of the reservoir cylinder **90**, more specifically, against a pal of the rear surface positioned around an opening circumferential edge portion of the communication hole **95**. A protrusion portion **26***a* protruding forward is formed on a front surface of the closing wall **26**.

The protrusion portion **26***a* has a truncated cone shape located coaxially with the axis O**2**. The protrusion portion **26***a* has an outer diameter that is decreased forward from the rear. Accordingly, the communication hole **95** is closed when an outer circumferential surface of the protrusion portion **26***a* abuts an inner surface of a rear end portion of the communication hole **95**.

The reception member **33** includes a reception tube **34** and a reception seat portion **35**.

The reception tube **34** has a topped cylindrical shape opening rearward and having a front side closed and is disposed inside the plunger tube **25**. A rear part of the reception tube **34** protrudes rearward from a rear opening section of the plunger tube **25** and is disposed inside the rear tube portion **97** of the cylinder tube **93**. The outer diameter of the reception tube **34** is smaller than the inner diameter of the rear tube portion **97**. Accordingly, an annular gap is provided between an outer circumferential surface of the rear part of the reception tube **34** and the inner circumferential surface of the rear tube portion **97**. Further, the front part of the bias member **81** is disposed in this gap.

The reception seat portion **35** has a flange shape protruding from the outer circumferential surface of the rear part of the reception tube **34**. A front surface of the reception seat portion **35** abuts or approaches the rear end opening edge of the plunger tube **25**.

The bias member **81** biases the reservoir plunger **80** forward. The bias member **81** surrounds the rear part of the reception tube **34** and is disposed between the reception seat portion **35** and the support wall portion **62** of the support member **60** in a state of being compressed in the forward/rearward direction. Accordingly, a front end edge of the bias member **81** abuts a rear surface of the reception seat portion **35**, and a rear end edge of the bias member **81** abuts a front surface of the support wall portion **62**.

The bias member **81** is a metal coil spring located coaxially with the axis O**2**. However, it is not limited to this case. For example, a resin spring may be used or other members having elasticity may be used as the bias member **81**.

When the reservoir plunger **80** moves rearward against the bias member **81** and the closing wall **26** is separated rearward from the front wall portion **92** of the reservoir cylinder **90**, the communication hole **95** is opened. A liquid in the storage space **90***a* of the reservoir cylinder **90** is compressed until the reservoir plunger **80** moves rearward. When the liquid pressure in the storage space **90***a* reaches a predetermined value, the reservoir plunger **80** moves rearward against the bias member **81**. Accordingly, a liquid in the storage space **90***a* can be supplied to the spray hole **4** side through the communication hole **95**. Therefore, the reservoir plunger **80** functions as an accumulator valve.

The reservoir valve **20** is provided inside the inner tube **13** of the vertical supply tube **10**.

The reservoir valve **20** is a check valve allowing supply of a liquid to the inside of the reservoir cylinder **90** from the inside of the vertical supply tube **10** and restricting outflow of a liquid to the inside of the vertical supply tube **10** from the inside of the reservoir cylinder **90**. Specifically, the reservoir valve **20** has a fixed portion **21** fixed inside the upper end portion of the inner tube **13**, a valve body portion **22** disposed on the upper surface of the valve seat portion **13***e*, and an elastic deformation portion **23** connecting the fixed portion **21** and the valve body portion **22** to each other.

The fixed portion **21** has a disk shape and is tightly fitted into the upper end portion of the inner tube **13**.

The valve body portion **22** has a pillar shape extending in the upward/downward direction and faces a rear end opening of the communication tube portion **53***d* in the forward/rearward direction. A lower end surface of the valve body portion **22** faces the ball valve **19** in the upward/downward direction.

A flange-shaped valve plate portion **22***a* is formed on a part of an outer circumferential surface of the valve body portion **22** positioned above the communication tube portion **53***d*, and disposed on the upper surface of the valve seat portion **13***e* so as to be separable upward from the upper surface. The elastic deformation portion **23** is elastically deformable in the upward/downward direction. When the inside of the main cylinder **53** is compressed, the elastic deformation portion **23** is compressively deformed upward due to upward displacement of the valve body portion **22**. Thus, the valve plate portion **22***a* is separated upward from the valve seat portion **13***e* so as to allow supply of a liquid into the reservoir cylinder **90** from the inside of the vertical supply tube **10**.

The cover body **100** is formed to cover the entirety of the vertical supply tube **10** except for the lower end portion, the entirety of the injection tube portion **11**, and the entirety of the reservoir cylinder **90** from at least both sides in the leftward/rightward direction and above.

As illustrated in FIGS. **1** and **2**, a first connection plate **110** is formed above the injection tube portion **11**.

The first connection plate **110** has a plate shape extending forward from an upper end portion of the front wall portion **92** of the reservoir cylinder **90**. Accordingly, the first connection plate **110** has a rectangular shape extending in the forward/rearward direction and the leftward/rightward direction in a plan view.

An interlock hole **111** penetrating the first connection plate **110** in the upward/downward direction is formed in the first connection plate **110**. The shape of the interlock hole **111** is not particularly limited. However, for example, the interlock hole **111** may be formed to open in a rectangular shape in a plan view.

Moreover, expansion portions **112** protruding upward and coming into contact with the cover body **100** from below are formed on an upper surface of the first connection plate **110**.

For example, the expansion portion **112** expands upward in a hemispherical shape in a longitudinal cross-sectional view and is formed in a laterally long shape extending in the forward/rearward direction throughout the overall length of the first connection plate **110**. A pair of expansion portions **112** extend parallel to each other and are arranged in the leftward/rightward direction with the interlock hole **111** interposed therebetween.

The shape and position of the expansion portion **112** are not limited to this case and may be suitably changed.

As the expansion portions **112** of the first connection plate **110** come into contact with the cover body **100** from below, upward displacement of the first connection plate **110** is curbed.

(Nozzle Member)

As illustrated in FIGS. **1** and **2**, the nozzle member **3** is assembled to the sprayer main body **2** mainly utilizing the injection tube portion **11**.

The nozzle member **3** includes a mounting tube portion **120** externally fitted to the injection tube portion **11** from the front, a restriction wall **121** extending downward from the mounting tube portion **120**, a connection wall **122** extending upward from the mounting tube portion **120**, a nozzle shaft portion **123** disposed inside the front end portion of the mounting tube portion **120**, and a second connection plate **124** extending rearward from the connection wall **122**.

The mounting tube portion **120** includes a front tube portion **120***a* extending forward from the restriction wall **121** and the connection wall **122**, and a rear tube portion **120***b* extending rearward from the restriction wall **121** and the connection wall **122**. The rear tube portion **120***b* of the mounting tube portion **120** is tightly externally fitted to the injection tube portion **11** from the front side.

The rear tube portion **120***b* of the mounting tube portion **120** is not externally fitted to the injection tube portion **11** throughout the overall length thereof and is externally fitted to a base end portion of the injection tube portion **11**, that is, to a part of the injection tube portion **11** excluding the rear end portion (root side). Accordingly, a rear end edge of the rear tube portion **120***b* is disposed in front of the front wall portion **92** in a state in which a gap in the forward/rearward direction is provided between the rear end edge of the rear tube portion **120***b* and the front wall portion **92**.

The nozzle shaft portion **123** is disposed inside the front tube portion **120***a* of the mounting tube portion **120** and coaxially with the injection tube portion **11**. A center axis of the nozzle shaft portion **123** is positioned slightly above the axis O2 of the reservoir cylinder **90**. A front end portion of the nozzle shaft portion **123** is positioned slightly behind a front end portion of the front tube portion **120***a* of the mounting tube portion **120**.

A nozzle cap **125**, which opens forward and in which the spray hole **4** for spraying a liquid forward is formed, is mounted on the nozzle shaft portion **123**. The spray hole **4** is located coaxially with the injection tube portion **11**. A communication path (not illustrated) allowing the inside of a part of the front tube portion **120***a* of the mounting tube portion **120** positioned behind the nozzle shaft portion **123** and the spray hole **4** to communicate with each other is provided between an outer surface of the nozzle shaft portion **123** and an inner surface of the nozzle cap **125**.

As a lower end edge of the restriction wall **121** abuts an upper end portion of the trigger portion **51** from above, the restriction wall **121** positions the trigger portion **51** at the foremost swing position and restricts further forward swinging of the trigger portion **51**.

The second connection plate **124** has a plate shape extending rearward from an upper end portion of the connection wall **122**. Accordingly, the second connection plate **124** has a rectangular shape extending in the forward/rearward direction and the leftward/rightward direction in a plan view and is disposed parallel to the first connection plate **110**. The second connection plate **124** is positioned between the mounting tube portion **120** and the first connection plate **110** and is disposed so as to overlap the first connection plate **110** from below.

An interlock protrusion **126** protruding upward is formed on the second connection plate **124**, and enters the interlock hole **111** formed in the first connection plate **110** and is interlocked with the interlock hole III from behind. Accordingly, the entirety of the nozzle member **3** is assembled to the injection tube portion **11** in a locked state such that the nozzle member **3** is prevented from relatively moving forward with respect to the injection tube portion **11**.

Moreover, the second connection plate **124** extends rearward beyond the mounting tube portion **120** and surrounds a rear end portion of the injection tube portion **11**. In addition to this, the second connection plate **124** is sandwiched between the first connection plate **110** and the injection tube portion **11** in the upward/downward direction. Specifically, a protrusion portion **127** protruding upward and disposed below a rear end portion of the second connection plate **124** is formed on an outer circumferential surface of the injection tube portion **11** on the rear end portion side positioned behind the mounting tube portion **120**, such that the rear end portion of the second connection plate **124** is sandwiched between the protrusion portion **127** and the first connection plate **110**. In the illustrated example, the protrusion portion **127** has a rib shape extending in the forward/rearward direction.

In the trigger-type liquid sprayer **1**, as illustrated in FIGS. **1** and **2**, a displacement curbing portion **150** for curbing displacement of the rear tube portion (rear cylinder portion) **97** of the reservoir cylinder **90** with respect to the vertical supply tube **10** is provided between the rear tube portion **97** and the vertical supply tube **10**. The displacement curbing portion **150** includes a reinforcement rib **151** which is formed integrally with the vertical supply tube **10** and the rear tube portion **97** such that the vertical supply tube **10** and the rear tube portion **97** are integrally connected to each other.

The reinforcement rib **151** is formed to integrally connect the small diameter portion **12***b* of the outer tube **12** of the vertical supply tube **10** and the rear tube portion **97** to each other. Specifically, the reinforcement rib **151** is formed on an outer circumferential surface of a rear portion of the small diameter portion **12***b* and has a longitudinal rib shape extending in the upward/downward direction throughout the overall length of the small diameter portion **12***b*. A lower end portion of the reinforcement rib **151** reaches the annular connection portion **12***c* of the outer tube **12** and is formed integrally with the annular connection portion **12***c*. An upper end portion of the reinforcement rib **151** reaches the rear tube portion **97** and is formed integrally with the rear tube portion **97**.

Accordingly, the vertical supply tube **10** and the rear tube portion **97** are firmly integrally connected to each other with the reinforcement rib **151** therebetween. Particularly, since the reinforcement rib **151** is interposed between the annular connection portion **12***c* and the rear tube portion **97** in the

upward/downward direction, it is possible to effectively curb displacement of the rear tube portion **97** in the upward/downward direction with respect to the vertical supply tube **10**.

(Operation of Trigger-Type Liquid Sprayer)

Next, a case of using the trigger-type liquid sprayer **1** will be described. Note that the respective parts of the trigger-type liquid sprayer **1** are filled with a liquid by a plurality of times of operations of the trigger portion **51**, and the liquid can be sucked up into the vertical supply pipe **10**.

After the stopper T illustrated in FIG. **1** is detached, when the trigger portion **51** is operated to be pulled rearward against a biasing force of the coil spring **54**, the main piston **52** moves rearward from the foremost position, and the inside of the main cylinder **53** is compressed. Accordingly, a liquid inside the main cylinder **53** is supplied to the inside of the inner tube **13** of the vertical supply tube **10** through the inside of the communication tube portion **53***d*. Then, the liquid supplied to the inner tube **13** presses down the ball valve **19** disposed at the upper end opening edge of the support tube portion **16** and pushes up the valve body portion **22** of the reservoir valve **20** such that the valve plate portion **22***a* is separated from the upper surface of the valve seat portion **13***e*.

Accordingly, a liquid inside the vertical supply tube **10** can be supplied to the storage space **90***a* of the reservoir cylinder **90** through the penetration hole **13***f*, the penetration hole **31***a*, the inside of the connection tube portion **30**, and the supply hole **91** illustrated in FIG. **2** so that the storage space **90***a* is compressed. For this reason, the reservoir plunger **80** can be moved rearward from the forefront position against a biasing force of the bias member **81** in response to compression of the storage space **90***a* to store (fill) the liquid in the storage space **90***a*.

In an initial stage in which a liquid begins to be introduced into the storage space **90***a*, the liquid enters a gap between the inner circumferential surface of the front lip portion **25***a* and the outer circumferential surface of the front end portion of the plunger tube **25**. For this reason, it is easy to move the reservoir plunger **80** rearward.

When the reservoir plunger **80** moves rearward, the closing wall **26** is separated rearward from the front wall portion **92** of the reservoir cylinder **90**. Accordingly, the communication hole **95** can be opened, and a high-pressure liquid in the storage space **90***a* can be guided to the spray hole **4** through the communication hole **95** and the inside of the injection tube portion **11**. Therefore, the liquid can be sprayed forward through the spray hole **4**.

As described above, every time an operation of pulling the trigger portion **51** rearward is performed, a liquid can be sprayed through the spray hole **4**, and a liquid can be stored in the storage space **90***a* by moving the reservoir plunger **80** rearward.

After that, when the trigger portion **51** is released, as the main piston **52** is moved back forward inside the main cylinder **53** by the elastic recovering force (biasing force) of the coil spring **54**, the trigger portion **51** is moved back forward in conjunction with the movement of the main piston **52**. For this reason, the inside of the main cylinder **53** can be decompressed such that the pressure in the main cylinder **53** becomes lower than the pressure in the container body A, and thus the ball valve **19** can be separated upward from the upper end opening edge of the support tube portion **16** in a state in which the valve body portion **22** of the reservoir valve **20** remains being pressed against the upper surface of the valve seat portion **13***e*. Therefore, a liquid inside the container body A can be sucked up into the vertical supply tube **10** and can be introduced into the main cylinder **53** through the inside of the support tube portion **16** and the inside of the communication tube portion **53***d*.

Accordingly, it is possible to prepare for the next spray.

If a rearward operation of the trigger portion **51** is stopped, although supply of a liquid to the storage space **90***a* through the inside of the vertical supply tube **10** and the inside of the connection tube portion **30** stops, the reservoir plunger **80** begins to move forward toward the forefront position due to a biasing force of the bias member **81**.

At this time, outflow of a liquid from the storage space **90***a* to the inside of the vertical supply tube **10** is restricted by the reservoir valve **20**.

Accordingly, a liquid accumulated in the storage space **90***a* can be guided to the spray hole **4** through the communication hole **95** and the inside of the injection tube portion **11**, and the liquid can be continuously sprayed forward through the spray hole **4**.

In this manner, not only when an operation of pulling the trigger portion **51** rearward is performed but also when an operation of the trigger portion **51** is not performed, a liquid can be sprayed, and continuous spraying of a liquid can be performed.

For instance, when an operation of pulling the trigger portion **51** rearward is performed in a state in which the reservoir plunger **80** is positioned at the rearmost position, there is a possibility that a liquid may be excessively supplied to the storage space **90***a* and liquid leakage, breakage of each portion, or the like may occur.

In the present embodiment, when the reservoir plunger **80** moves rearward to a certain extent, the front lip portion **25***a* reaches the communication grooves **94** so that the inside of the storage space **90***a* communicates with the inside of the container body A through the communication grooves **94**, the recovery hole **99**, and the recovery path **17**. Namely, when the reservoir plunger **80** moves rearward, the inside of the storage space **90***a* and the inside of the container body A can communicate with each other utilizing the recovery path **17**.

Therefore, a part of a liquid inside the storage space **90***a* can be returned to the inside of the container body A, and excessive supply of a liquid to the inside of the storage space **90***a* can be curbed. Accordingly, excessive increase in pressure inside the storage space **90***a* can be curbed, and occurrence of liquid leakage, breakage of each portion, and the like can be curbed.

As described above, according to the trigger-type liquid sprayer **1** of the present embodiment, not only when an operation of pulling the trigger portion **51** rearward is performed but also when an operation of the trigger portion **51** is not performed, a liquid can be sprayed, and continuous spraying of a liquid can be performed.

The upper end portion of the trigger portion **51** (fulcrum) is pivotally supported by the nozzle member **3** such that the trigger portion **51** is swingable, and the main piston **52** is interlocked with the intermediate portion (point of action) of the trigger portion **51**. Therefore, for example, by operating the lower end portion (point of leverage) of the trigger portion **51**, the main piston **52** can be efficiently moved utilizing a so-called principle of leverage. For this reason, operability of the trigger portion **51** can be improved.

Moreover, in the trigger-type liquid sprayer **1** of the present embodiment, the displacement curbing portion **150** for curbing displacement of the rear tube portion **97** with respect to the vertical supply tube **10** is provided between the rear tube portion **97** of the reservoir cylinder **90** and the vertical supply tube **10**. Therefore, for example, even if an

external force such as an impact due to a drop or an impact due to contact with the outside acts on the reservoir cylinder **90**, displacement (deformation) of the rear tube portion **97**, for example, in the upward/downward direction can be curbed.

For example, due to a drop impact or the like, even if an external force as indicated by Arrow F**1** in FIG. **1** acts on the rear end portion of the rear tube portion **97**, by providing the displacement curbing portion **150**, displacement in which the rear tube portion **97** is folded downward starting from a connected portion between the rear tube portion **97** and the vertical supply tube **10** due to a rotation torque or the like caused by the external force can be curbed. Accordingly, the rigidity against an unexpected external force can be enhanced, and the impact resistance of the trigger-type liquid sprayer **1** can be improved.

Particularly, since the vertical supply tube **10** and the rear tube portion **97** are integrally connected to each other by the reinforcement rib **151** formed integrally with the vertical supply tube **10** and the rear tube portion **97** and having a longitudinal rib shape, the rigidity of the connected portion between the vertical supply tube **10** and the rear tube portion **97** can be effectively enhanced. For this reason, even if an external force as indicated by Arrow F**2** in FIG. **1** acts on the nozzle member **3** due to a drop impact or the like, displacement in which the rear tube portion **97** is lifted upward starting from the connected portion between the rear tube portion **97** and the vertical supply tube **10** due to a rotation torque or the like caused by the external force can be effectively curbed.

As a result, a high-quality trigger-type liquid sprayer **1** having a high rigidity against a drop impact, a contact impact, and the like can be obtained.

Moreover, since the impact resistance can be improved, a larger internal volume (internal capacity) inside the reservoir cylinder **90** can be secured, for example, by forming the rear tube portion **97** to extend rearward beyond the vertical supply tube **10**. Accordingly, more liquid can be reserved inside the reservoir cylinder **90** and the trigger-type liquid sprayer **1** suitable for continuous injection can be obtained.

Moreover, in the trigger-type liquid sprayer **1** of the present embodiment, the nozzle member **3** is assembled to the sprayer main body **2** by externally fitting the mounting tube portion **120** to the injection tube portion **11**. Moreover, as the mounting tube portion **120** is externally fitted to the injection tube portion **11**, the second connection plate **124** overlaps the first connection plate **110** from below in a state in which the interlock protrusion **126** is interlocked with the interlock hole **111** from behind, and the second connection plate **124** is sandwiched between the first connection plate **110** and the injection tube portion **11** in the upward/downward direction.

Therefore, detachment of the nozzle member **3** such as relative forward movement of the nozzle member **3** with respect to the injection tube portion **11** can be curbed, and displacement of the nozzle member **3** in the upward/downward direction with respect to the sprayer main body **2** can be curbed.

Second Embodiment

Next, hereinafter, a second embodiment of a trigger-type liquid sprayer according to the present invention will be described with reference to FIGS. **6** to **13**. In description of the present embodiment, the same reference signs are applied to constituents similar to those of the first embodiment and description thereof will be omitted, and only different points will be described.

As illustrated in FIGS. **6** and **7**, similar to the trigger-type liquid sprayer **1** of the first embodiment, a trigger-type liquid sprayer **1**A of the present embodiment includes the sprayer main body **2** which is mounted on the container body A accommodating a liquid therein, and the nozzle member **3** having the spray hole for spraying a liquid and mounted on the sprayer main body **2**.

In the present embodiment, as illustrated in FIG. **8**, the annular connection portion **13***c* is formed in a stepped state in the upward/downward direction such that a pan of the annular connection portion **13***c* positioned behind the small diameter portion **13***b* is positioned below a part of the annular connection portion **13***c* positioned in front of the small diameter portion **13***b*. However, it is not limited to this case, and the annular connection portion **13***c* may be formed such that the height of the annular connection portion **13***c* is the same throughout the whole circumference.

An annular pipe fitting tube **13***h* protruding downward from the annular connection portion **13***c* is formed in the small diameter portion **13***b*. The pipe fitting tube **13***h* opens downward and has a tapered shape in a longitudinal cross-sectional view in which the inner circumferential surface of the pipe fitting tube **13***h* has a diameter that is gradually increased downward. The pipe **15** is fitted into the small diameter portion **13***b* by being inserted into the small diameter portion **13***h* from below through the pipe fitting tube **13***h*.

Moreover, in the trigger-type liquid sprayer **1**A of the present embodiment, as illustrated in FIGS. **7** and **9** to **11**, an upper rib **160** is formed integrally on the outer circumferential surface of an upper end portion of the reservoir cylinder **90**.

The upper rib **160** protrudes upward, is positioned on the axis O**1** of the vertical supply tube **10** and extends in the forward/rearward direction. Specifically, the upper rib **160** is formed on an upper pan of the cylinder tube **93** and positioned in the connected portion between the front tube portion **96** and the stepped portion **98** in the cylinder tube **93**.

The upper rib **160** includes a front wall surface (first wall surface) **161** facing the front side (the other side in the axial direction), a rear wall surface (second wall surface) **162** facing the rear side (one side in the axial direction), a pair of side wall surfaces **163** facing outward in the leftward/rightward direction and connected to the front wall surface **161** and the rear wall surface **162**, and a flat top wall surface **164** disposed above the front tube portion **96** and connected to the front wall surface **161**, the rear wall surface **162** and the pair of side wall surfaces **163**.

The upper rib **160** is formed such that the length in the forward/rearward direction is longer than the width in the leftward/rightward direction. The upper rib **160** in the illustrated example is formed such that the width is increased in the middle portion in the forward/rearward direction instead of the width being uniform throughout the overall length in the forward/rearward direction. Therefore, the upper rib **160** is provided with a pair of expansion portions **165** expanding outward in the leftward/rightward direction.

The pair of expansion portions **165** are formed at positions closer to the front wall surface **161** than an intermediate portion of the upper rib **160** in the forward/rearward direction. The upper rib **160** is disposed such that a part of the upper rib **160** having the largest width by the pair of expansion portions **165** is positioned immediately above the axis O**1** of the vertical supply tube **10**.

The side wall surfaces **163** are formed to expand outward in the leftward/rightward direction in accordance with expansion of the expansion portions **165**.

All the front wall surface **161**, the rear wall surface **162**, and the pair of side wall surfaces **163** are inclined surfaces spreading outward and downward from the top wall surface **164**. This will be described below in detail. The rear wall surface **162** is disposed such that it covers the stepped portion **98** from above and is connected to a boundary part between the stepped portion **98** and the rear tube portion **97**.

The front, wall surface **161** is an inclined surface inclined to extend rearward and upward from an outer circumferential surface of the reservoir cylinder **90**, that is, from an outer circumferential surface of the front tube portion **96**. Specifically, the front wall surface **161** is formed such that, an inclination angle θ**1** of the front wall surface **161** with respect to the outer circumferential surface of the front tube portion **96** becomes an acute angle smaller than 90 degrees, for example, 65 degrees in a side view of the reservoir cylinder **90**.

Moreover, a first curved surface part **166** recessed rearward in a side view of the reservoir cylinder **90** is formed in a connected portion between the front wall surface **161** and the outer circumferential surface of the front tube portion **96**. In the illustrated example, the first curved surface part **166** has a recessed curved surface shape having a curvature radius of 2 mm in a side view of the reservoir cylinder **90**.

A connected portion between the front wall surface **161** and the top wall surface **164** is a curved surface part having a curvature radius of 0.5 mm in a side view of the reservoir cylinder **90**. The curvature radius of this curved surface part is not limited to 0.5 mm and may be suitably changed.

As illustrated in FIG. **9**, the rear wall surface **162** is an inclined surface inclined to extend forward and upward from the outer circumferential surface of the reservoir cylinder **90**, that is, from an outer circumferential surface of the rear tube portion **97** in a side view of the reservoir cylinder **90**. Specifically, the rear wall surface **162** is formed such that an inclination angle θ**2** of the rear wall surface **162** with respect to the outer circumferential surface of the rear tube portion **97** becomes an acute angle smaller than 90 degrees, for example, 45 degrees in a side view of the reservoir cylinder **90**.

Moreover, a second curved surface part **167** recessed forward in a side view of the reservoir cylinder **90** is formed in a connected portion between the rear wall surface **162** and the outer circumferential surface of the rear tube portion **97**. In the illustrated example, the second curved surface pan **167** has a recessed curved surface shape having a curvature radius of 2 mm in a side view of the reservoir cylinder **90**.

A connected portion between the rear wall surface **162** and the top wall surface **164** is a curved surface part having a curvature radius of 0.5 mm in a side view of the reservoir cylinder **90**. The curvature radius of this curved surface part is not limited to 0.5 mm and may be suitably changed.

As illustrated in FIG. **10**, the pair of side wall surfaces **163** are inclined surfaces inclined to extend inward in the leftward/rightward direction and upward from the outer circumferential surface of the reservoir cylinder **90**, that is, from the outer circumferential surface of the front tube portion **96** in a front view of the reservoir cylinder **9**) viewed in a direction of the axis O**2**. Specifically, the pair of side wall surfaces **163** are inclined such that an inclination angle θ**3** of the side wall surface **163** with respect to the axis O**1** of the vertical supply tube **10** becomes an acute angle smaller than 90 degrees, for example, 15 degrees in a front view of the reservoir cylinder **90**.

Moreover, third curved surface pans **168** recessed downward in a front view of the reservoir cylinder **90** are formed in connected portions between the pair of side wall surfaces **163** and the outer circumferential surface of the front tube portion **96**. In the illustrated example, the third curved surface part **168** has a recessed curved surface shape having a curvature radius of 2 mm similarly to the first curved surface part **166** and the second curved surface part **167**.

Connected portions between the pair of side wall surfaces **163** and the top wall surface **164** are curved surface parts having a curvature radius of 0.5 mm in a front view of the reservoir cylinder **90**. The curvature radius of this curved surface part is not limited to 0.5 mm and may be suitably changed.

As illustrated in FIG. **6**, an upward protruding amount (rib height) of the upper rib **160** is set such that the top wall surface **164** constitutes a part of the outermost diameter portion of the reservoir cylinder **90**. Particularly, the rib height of the upper rib **160** is set such that the upper rib **160** is disposed at the highest position (including height positions equivalent to other constituent members) among constituent members (excluding the cover body **100**) such as the injection tube portion **11**, the first connection plate **110**, and the nozzle member **3** in addition to the reservoir cylinder **90**.

Moreover, in the trigger-type liquid sprayer **1**A of the present embodiment, as illustrated in FIGS. **8** and **12**, a connection reinforcement portion **170** integrally connecting the pipe fitting tube **13***h* and the large diameter portion **13***a* to each other in the radial direction is formed at a rear part of the pipe fitting tube **13***h* of the inner tube **13**. Accordingly, the strength of the rear part of the annular connection portion **13***c* can be improved and the rigidity thereof can be enhanced.

Particularly, the connection reinforcement portion **170** is disposed between the pipe fitting tube **13***h* and the large diameter portion **13***a*, has a circular arc shape extending in the circumferential direction in a plan view, and is formed integrally with the annular connection portion **13***c* and connected to the annular connection portion **13***c* from below. Accordingly, the strength of the rear part of the annular connection portion **3***c* can be effectively improved and the rigidity thereof can be enhanced. In addition to this, since the connection reinforcement portion **170** extends in the circumferential direction, the rear part of the pipe fitting tube **13***h* and the large diameter portion **13***a* can be integrally connected to each other over a wider range, and the rigidity of the rear part of the annular connection portion **13***c* can be further enhanced.

Moreover, according to the trigger-type liquid sprayer **1**A of the present embodiment, since the upper rib **160** is provided in the reservoir cylinder **90**, the vertical supply tube **10** and the reservoir cylinder **90** can be accurately assembled with favorable setting properties at the time of assembling.

That is, as illustrated in FIG. **13**, since the upper rib **160** is provided in the reservoir cylinder **90** such that it is positioned on the axis O**1** of the vertical supply tube **10**, when the inner tube **13** is fitted into the outer tube **12** formed integrally with the reservoir cylinder **90** by plugging or the like, a load F transmitted from the inner tube **13** to the reservoir cylinder **90** by plugging can be appropriately received utilizing the upper rib **160**.

Particularly, as illustrated in FIG. **6**, since the upper rib **160** is disposed at the highest position among constituent members (excluding the cover body **100**) such as the injection tube portion **11**, the first connection plate **110**, and the nozzle member **3** in addition to the reservoir cylinder **90**, at

the time of assembling illustrated in FIG. **13**, for example, in a state in which the upper rib **160** is brought into contact with a setting surface S, the inner tube **13** can be fitted into the outer tube **12** by plugging or the like. Accordingly, the load F can be appropriately received utilizing the upper rib **160**. As a result, the vertical supply tube **10** and the reservoir cylinder **90** can be accurately assembled with favorable setting properties.

When the upper rib **160** is not formed in the reservoir cylinder **90**, as illustrated in FIG. **7**, a part of the reservoir cylinder **90** positioned on the axis O**1** of the vertical supply tube **10** is the front tube portion **96** having a lower height than the rear tube portion **97**. For this reason, as illustrated in FIG. **13**, when the inner tube **13** is fitted into the outer tube **12** by plugging or the like, if the upper rib **160** is not formed, there is a possibility that the front tube portion **96** may be displaced (warped or the like) due to the load F from the inner tube **13** by plugging, and the vertical supply tube **10** and the reservoir cylinder **90** may be improperly set.

However, according to the present embodiment, since the upper rib **160** is provided, such improper setting will not occur.

Moreover, as illustrated in FIG. **9**, the front wall surface **161** of upper rib **160** is an inclined surface having the inclination angle θ**1** of 65 degrees with respect to the outer circumferential surface of the front tube portion **96** of the reservoir cylinder **90**, instead of a vertical surface forming, for example, a right angle. In addition to this, the first curved surface part **166** is formed in the connected portion between the front wall surface **161** and the outer circumferential surface of the front tube portion **96**.

Similarly, the rear wall surface **162** of the upper rib **160** is an inclined surface having the inclination angle θ**2** of 45 degrees with respect to the outer circumferential surface of the rear tube portion **97** of the reservoir cylinder **90**. Furthermore, the second curved surface part **167** is formed in the connected portion between the rear wall surface **162** and the outer circumferential surface of the rear tube portion **97**.

Accordingly, for example, even if an impact force due to a drop impact or contact with the outside acts on the reservoir cylinder **90** and the reservoir cylinder **90** is displaced such that it is folded in the upward/downward direction due to a rotation torque or the like caused by this, occurrence of a flaw such as cracking in the connected portions between the reservoir cylinder **90**, and the front wall surface **161** and the rear wall surface **162** can be curbed.

Specifically, due to a drop impact or the like, when an impact force as indicated by Arrow F**1** in FIG. **6** acts on the rear end portion of the rear tube portion **97** of the reservoir cylinder **90**, there is a possibility of displacement in which the rear tube portion **97** is folded downward starting from the connected portion between the rear tube portion **97** and the vertical supply tube **10** due to a rotation torque or the like caused by an impact force. On the contrary, when an impact force as indicated by Arrow F**2** in FIG. **6** acts on the nozzle member **3**, there is a possibility of displacement in which the rear tube portion **97** is lifted upward due to a rotation torque or the like.

When such displacement occurs, there is a possibility that, for example, a local tensile force, a local compressive force, or the like may act on the connected portion between the reservoir cylinder **90** and the front wall surface **161** of the upper rib **160** and the connected portion between the reservoir cylinder **90** and the rear wall surface **162** of the upper rib **160**, and a flaw such as cracking may occur due to this force.

However, according to the upper rib **160** of the present embodiment, the front wall surface **161** and the rear wall surface **162** are inclined surfaces. Furthermore, the front wall surface **161** is connected to the outer circumferential surface of the front tube portion **96** with the first curved surface part **166** therebetween, and the rear wall surface **162** is connected to the outer circumferential surface of the rear tube portion **97** with the second curved surface part **167** therebetween. Therefore, a local tensile force, a local compressive force, or the like can be alleviated, and therefore the foregoing flaw is unlikely to occur.

Therefore, the rigidity against an unexpected external force (an impact force or the like) can be enhanced, and the impact resistance of the trigger-type liquid sprayer **1**A can be improved. As a result, a high-quality trigger-type liquid sprayer **1**A having high rigidity against a drop impact, a contact impact, or the like can be obtained. Moreover, since the impact resistance can be improved, a larger internal volume (internal capacity) inside the reservoir cylinder **90** can be secured, for example, by forming the rear tube portion **97** to extend rearward beyond the vertical supply tube **10**. Accordingly, more liquid can be reserved inside the reservoir cylinder **90** and the trigger-type liquid sprayer **1**A suitable for continuous injection can be obtained.

Moreover, in the upper rib **160**, not only the front wall surface **161** and the rear wall surface **162** but also the pair of side wall surfaces **163** are inclined, and the pair of side wall surfaces **163** are connected to the outer circumferential surface of the front tube portion **96** with the third curved surface parts **168** therebetween. Therefore, for example, even if the reservoir cylinder **90** is displaced such that it is twisted in the leftward/rightward direction due to an impact force, occurrence of a flaw such as cracking in the connected portion between the pair of side wall surfaces **163** and the front, tube portion **96** can be curbed.

As described above, according to the trigger-type liquid sprayer **1**A of the present embodiment, setting properties of the vertical supply tube **10** and the reservoir cylinder **90** can be improved utilizing the upper rib **160** and the trigger-type liquid sprayer **1**A having exceptional impact resistance can be obtained.

Moreover, according to the trigger-type liquid sprayer **1**A of the present embodiment, as illustrated in FIG. **8**, since the connection reinforcement portion **170** integrally connecting the large diameter portion **13***a*, which is fitted into the mouth portion A**1** of the container body A, and the pipe fitting tube **13***h* to each other in the radial direction is provided at the rear pan of the pipe fitting tube **13***h*, the strength of the rear part of the annular connection portion **13***c* can be improved and the rigidity thereof can be enhanced. Accordingly, for example, even if an impact force due to a drop impact or contact with the outside acts on the reservoir cylinder **90** and the vertical supply tube **10** is displaced so as to warp or tilt, displacement such as warpage of the rear part of the annular connection portion **13***c* can be curbed. Accordingly, occurrence of a flaw such as cracking in the connected portion between the rear part of the annular connection portion **13***c* and the pipe fitting tube **13***h* or the like can be curbed. In addition, since it can be expected that the rigidity of the pipe fitting tube **13***h* be also improved by the connection reinforcement portion **170**, occurrence of the foregoing flaw can be curbed. In this regard as well, the impact resistance of the trigger-type liquid sprayer **1**A can be improved.

Moreover, in the trigger-type liquid sprayer **1**A of the present embodiment, as illustrated in FIG. **6**, since the displacement curbing portion **150** for curbing displacement of the rear tube portion **97** of the reservoir cylinder **90** with

respect to the vertical supply tube **10** is provided between the rear tube portion **97** and the vertical supply tube **10**, even if a drop impact or the like acts on the reservoir cylinder **90**, displacement (deformation) of the rear tube portion **97**, for example, in the upward/downward direction can be curbed.

Therefore, as described above, even if an external force as indicated by Arrow F**1** in FIG. **6** acts on the rear end portion of the rear tube portion **97** due to a drop impact or the like, since the displacement curbing portion **150** is provided, displacement in which the rear tube portion **97** is folded downward can be curbed. Accordingly, the rigidity against an unexpected external force can be enhanced, and the impact resistance of the trigger-type liquid sprayer **1**A can be improved. Moreover, since a load on the upper rib **160** and the connection reinforcement portion **170** can be reduced, occurrence of cracking or the like described above can be effectively curbed.

Moreover, since the reinforcement rib **151** having a longitudinal rib shape integrally connects the vertical supply tube **10** and the rear tube portion **97** to each other, the rigidity of the connected portion between the vertical supply tube **10** and the rear tube portion **97** can be effectively enhanced. For this reason, even when an external force as indicated by Arrow F**2** in FIG. **6** acts on the nozzle member **3** due to a drop impact or the like, displacement in which the rear tube portion **97** is lifted upward due to a rotation torque or the like can also be effectively curbed.

Moreover, in the trigger-type liquid sprayer **1**A of the present embodiment, as the mounting tube portion **120** is externally fitted to the injection tube portion **11**, the nozzle member **3** is assembled to the sprayer main body **2**, the second connection plate **124** overlaps the first connection plate **110** from below in a state in which the interlock protrusion **126** is interlocked with the interlock hole **111** from behind, and the second connection plate **124** is sandwiched between the first connection plate **110** and the injection tube portion **11** in the upward/downward direction.

Therefore, while restricting detachment of the nozzle member **3** such as relative forward movement of the nozzle member **3** with respect to the injection tube portion **11** (i.e., curbing detachment of the nozzle member **3**) displacement of the nozzle member **3** with respect to the sprayer main body **2** in the upward/downward direction can be curbed.

Hereinabove, embodiments of the present invention have been described. However, these embodiments are presented as examples but are not intended to limit the scope of the invention. The embodiments can be performed in various other forms, and various omissions, replacements, and changes can be made within a range not departing from the gist of the invention. For example, the embodiments and modification examples thereof include those that can be easily assumed by those skilled in the art, those that are substantially the same, those within an equivalent range, and the like.

For example, in the foregoing embodiments, displacement of the rear tube portion **97** with respect to the vertical supply tube **10** is curbed utilizing the reinforcement rib **151** formed integrally with the vertical supply tube **10** and the rear tube portion **97**, but it is not limited to the reinforcement rib **151**.

For example, as illustrated in FIGS. **3** and **4**, the displacement curbing portion **150** may include a reinforcement body **155** mounted on the vertical supply tube **10** and the rear tube portion **97**, and displacement of the rear tube portion **97** with respect to the vertical supply tube **10** may be curbed utilizing the reinforcement body **155** provided separately from the vertical supply tube **10** and the rear tube portion **97**.

In FIG. **3**, in order to make it easier to see, the reinforcement body **155** is illustrated by applying dotted hatching thereto.

The reinforcement body **155** includes a first reinforcement body **156** mounted on the vertical supply tube **10** from behind and holding the vertical supply tube **10**, and a second reinforcement body **157** formed integrally with the first reinforcement body **156**, mounted on the rear tube portion **97** from below, and holding the rear tube portion **97**.

The first reinforcement body **156** includes a first clip portion **158** having a C-shape in a plan view and surrounding the small diameter portion **12***b* of the outer tube **12** of the vertical supply tube **10** from the outside in the radial direction thereof. For example, the first clip portion **158** is elastically deformable in the radial direction and can elastically hold the small diameter portion **12***b* when it is mounted on the small diameter portion **12***b* from behind.

The second reinforcement body **157** includes a second clip portion **159** having a C-shape in a side view and surrounding the rear tube portion **97** from the outside in the radial direction thereof. For example, the second clip portion **159** is elastically deformable in the radial direction and can elastically hold the small diameter portion **12***b* when it is mounted to the small diameter portion **12***b* from below.

Even when the reinforcement body **155** having such a constitution is utilized, the entire rigidity can be enhanced by integrally assembling the vertical supply tube **10** and the rear tube portion **97**. Specifically, by mounting the first reinforcement body **156** on the vertical supply tube **10** from behind and mounting the second reinforcement body **157** on the rear tube portion **97** from below, the vertical supply tube **10** and the rear tube portion **97** are integrally connected to each other utilizing the reinforcement body **155** so that the entire rigidity can be enhanced. Therefore, it is possible to exhibit effects similar to those of the foregoing embodiments.

Particularly, since the separately provided reinforcement body **155** is utilized, moldability of the vertical supply tube **10** and the rear tube portion **97** is unlikely to be affected, and reinforcement is realized while the performance of spraying a liquid is appropriately maintained, in addition, since the reinforcement body **155** can be arbitrarily designed with a high degree of freedom, it is possible to effectively curb displacement of the rear tube portion **97**.

Even when the reinforcement body **155** is utilized, as illustrated in FIG. **5**, the vertical supply tube **10** and the rear tube portion **97** may be integrally connected to each other utilizing the reinforcement rib **151**, and the reinforcement body **155** may further be provided.

Moreover, the embodiments have described a constitution in which the reservoir plunger **80** closes the communication hole **95** and opens the communication hole **95** when it moves rearward against the bias member **81**. However, for example, a constitution in which the reservoir plunger **80** closes the supply hole **91** formed in the reservoir cylinder **90** and opens the supply hole **91** when it moves rearward against the bias member **81** may be employed.

In addition, in the second embodiment, the upper rib **160** is formed such that the inclination angle θ**1** of the front wall surface **161** becomes 65 degrees, but the inclination angle θ**1** is not limited to 65 degrees as long as it is an acute angle (smaller than 90 degrees). However, it is preferable that the inclination angle θ**1** be an angle of 45 degrees or larger. In this case, the rib height of the upper rib **160** can be easily secured, and the rigidity of the upper rib **160** can be enhanced. Therefore, at the time of assembling, a load transmitted from the inner tube **13** to the reservoir cylinder **90** can be more reliably received utilizing the upper rib **160**,

and the vertical supply tube **10** and the reservoir cylinder **90** can be accurately assembled with more favorable setting properties.

This also applies to the rear wall surface **162** and the pair of side wall surfaces **163**.

Moreover, in the second embodiment, the upper rib **160** is formed such that the first curved surface part **166** has a recessed curved surface shape having a curvature radius of 2 mm, but it is not limited to this case. However, it is preferable to form the first curved surface part **166** such that the first curved surface pan **166** has a recessed curved surface shape having a curvature radius of 1.5 mm or larger and more preferably 2 mm or larger.

This also applies to the second curved surface part **167** and the third curved surface part **168**.

When the curvature radii of the first curved surface part **166**, the second curved surface pan **167** and the third curved surface part **168** are smaller than 1.5 mm, a boundary line (crossing ridgeline) is likely to appear in the connected portions between the front wall surface **161**, the rear wall surface **162**, and the pair of side wall surfaces **163**, and the cylinder tube **93** of the reservoir cylinder **90**, and for example, a V-shaped notch (cutout) in a cross-sectional view may be formed in the connected portions. Accordingly, when an impact force such as a drop impact or the like acts on the reservoir cylinder **90**, concentration of stress is likely to occur where the notch has been formed, and this may cause breakage such as cracking in the connected portion between the upper rib **160** and the cylinder tube **93**.

However, in the second embodiment, since the curvature radii of the first curved surface part **166**, the second curved surface part **167**, and the third curved surface part **168** are 1.5 mm or larger, the flaw is unlikely to occur.

INDUSTRIAL APPLICABILITY

According to the present invention, it is possible to provide a trigger-type liquid sprayer having exceptional impact resistance.

REFERENCE SIGNS LIST

A Container body
1 Trigger-type liquid sprayer
2 Sprayer main body
3 Nozzle member
4 Spray hole
10 Vertical supply tube
11 Injection tube portion
12 Outer tube
13 Inner tube
50 Trigger mechanism
51 Trigger portion
52 Main piston
53 Main cylinder
80 Reservoir plunger
90 Reservoir cylinder
97 Rear tube portion (rear cylinder portion)
150 Displacement cubing portion
151 Reinforcement rib
155 Reinforcement body
156 First reinforcement body
157 Second reinforcement body
160 Upper rib
161 Front wall surface (first wall surface)
162 Rear wall surface (second wall surface)
166 First curved surface part
167 Second curved surface pan

What is claimed is:

1. A trigger-type liquid sprayer comprising:

a sprayer main body mounted on a container body configured to accommodate a liquid therein; and

a nozzle member having a spray hole for spraying the liquid forward, the nozzle member being mounted on a front end portion of the sprayer main body,

wherein the sprayer main body includes:

a vertical supply tube extending in an upward/downward direction and configured to suck up the liquid in the container body;

a trigger mechanism having a trigger portion disposed in front of the vertical supply tube to be movable rearward in a state in which the trigger portion is biased forward, the trigger mechanism being configured to cause the liquid to flow from an inside of the vertical supply tube toward the spray hole in response to rearward movement of the trigger portion;

a reservoir cylinder into which the liquid that has passed through the inside of the vertical supply tube is supplied in response to rearward movement of the trigger portion; and

a reservoir plunger disposed inside the reservoir cylinder to be movable in an axial direction along a center axis of the reservoir cylinder, and configured to move toward one side in the axial direction in response to supply of the liquid into the reservoir cylinder while being biased toward the other side in the axial direction,

the reservoir cylinder is disposed above the vertical supply tube, intersects a center axis of the vertical supply tube, and protrudes rearward beyond the vertical supply tube, and

a displacement curbing portion is provided between a rear cylinder portion of the reservoir cylinder protruding rearward beyond the vertical supply tube and the vertical supply tube, the displacement curbing portion being configured to curb displacement of the rear cylinder portion with respect to the vertical supply tube.

2. The trigger-type liquid sprayer according to claim **1**,

wherein the displacement curbing portion includes a reinforcement rib formed integrally with the vertical supply tube and the rear cylinder portion such that the vertical supply tube and the rear cylinder portion are integrally connected to each other.

3. The trigger-type liquid sprayer according to claim **1**,

wherein the displacement curbing portion includes a reinforcement body mounted on the vertical supply tube and the rear cylinder portion, and

the reinforcement body includes:

a first reinforcement body mounted on the vertical supply tube from behind and holding the vertical supply tube; and

a second reinforcement body formed integrally with the first reinforcement body, mounted on the rear cylinder portion from below, and holding the rear cylinder portion.

4. The trigger-type liquid sprayer according to claim **1**,

wherein the vertical supply tube includes an outer tube formed integrally with the reservoir cylinder, and an inner tube fitted into the outer tube,

an upper rib protruding upward is formed integrally on an outer circumferential surface of an upper end portion of

the reservoir cylinder, the upper rib being positioned on the center axis of the vertical supply tube and extending in the axial direction,

the upper rib includes a first wall surface facing the other side in the axial direction and inclined to extend toward one side in the axial direction and upward from the outer circumferential surface of the reservoir cylinder,

a first curved surface part is formed in a connected portion between the first wall surface and the outer circumferential surface of the reservoir cylinder, the first curved surface part being recessed toward one side in the axial direction in a side view of the reservoir cylinder, and

the first curved surface part has a recessed curved surface shape having a curvature radius of 1.5 mm or longer in a side view of the reservoir cylinder.

5. The trigger-type liquid sprayer according to claim **4**,

wherein an inclination angle of the first wall surface with respect to the outer circumferential surface of the reservoir cylinder is **45** degrees or larger in a side view of the reservoir cylinder.

6. The trigger-type liquid sprayer according to claim **4**,

wherein the upper rib includes a second wall surface facing one side in the axial direction and inclined to extend toward the other side in the axial direction and upward from the outer circumferential surface of the reservoir cylinder, and

a second curved surface part is formed in a connected portion between the second wall surface and the outer circumferential surface of the reservoir cylinder, the second curved surface part being recessed toward the other side in the axial direction in a side view of the reservoir cylinder.

7. The trigger-type liquid sprayer according to claim **1**,

wherein the displacement curbing portion includes a reinforcement rib formed integrally with the vertical supply tube and integrally with the rear cylinder portion such that the vertical supply tube and the rear cylinder portion are integrally connected to each other via the displacement curbing portion.

8. The trigger-type liquid sprayer according to claim **1**,

wherein the displacement curbing portion includes a reinforcement rib formed integrally with the vertical supply tube and the rear cylinder portion such that the vertical supply tube and the rear cylinder portion are integrally connected to each other, and

wherein an upper end portion of the reinforcement rib reaches the rear cylinder portion and is formed integrally with the rear cylinder portion.

* * * * *