US012410716B1

(12) **United States Patent**
Xie et al.

(10) **Patent No.: US 12,410,716 B1**
(45) **Date of Patent: Sep. 9, 2025**

(54) **ENGINE COMPONENT**

(71) Applicant: **General Electric Company**, Schenectady, NY (US)

(72) Inventors: **Ming Xie**, Dayton, OH (US); **Arthur W. Sibbach**, Boxford, MA (US); **Nicholas J. Kray**, Mason, OH (US)

(73) Assignee: **General Electric Company**, Evendale, OH (US)

(*) Notice: Subject to any disclaimer, the term of this patent is extended or adjusted under 35 U.S.C. 154(b) by 0 days.

(21) Appl. No.: **18/654,134**

(22) Filed: **May 3, 2024**

(51) **Int. Cl.**
F01D 5/14 (2006.01)
F01D 5/28 (2006.01)

(52) **U.S. Cl.**
CPC ***F01D 5/147*** (2013.01); ***F01D 5/282*** (2013.01); *F05D 2240/303* (2013.01); *F05D 2240/304* (2013.01); *F05D 2250/12* (2013.01)

(58) **Field of Classification Search**
CPC F05D 2240/303; F05D 2240/304; F05D 2220/36; F05D 2300/603; F05D 2240/121; F05D 2220/32; F05D 2250/12; F05D 2300/133; F05D 2300/171; F05D 2240/12; F05D 2240/307; F05D 2260/36; F05D 2300/6033; F05D 2300/6032; F04D 29/324; F04D 29/023; F01D 5/147; F01D 5/282; F01D 5/288; F01D 21/045
See application file for complete search history.

(56) **References Cited**

U.S. PATENT DOCUMENTS

4,006,999	A	2/1977	Brantley	
4,693,435	A *	9/1987	Percival	B64C 3/36 244/121
5,782,607	A *	7/1998	Smith	C25D 7/00 416/224
5,908,285	A *	6/1999	Graff	C25D 1/10 416/224
7,744,346	B2 *	6/2010	Schreiber	F01D 5/28 416/223 R
8,529,212	B2 *	9/2013	Smith	F04D 29/34 416/226
8,827,654	B2 *	9/2014	Schreiber	F04D 29/023 416/224
9,012,824	B2 *	4/2015	Christou	B23P 9/02 244/3.24
9,506,353	B2	11/2016	Schwarz et al.	
9,702,257	B2	7/2017	Yagi et al.	
10,221,718	B2	3/2019	Clarkson et al.	
10,240,463	B2	3/2019	Notarianni et al.	
10,471,556	B2	11/2019	Onfray et al.	

(Continued)

FOREIGN PATENT DOCUMENTS

CN	108930664 A	12/2018
FR	3010132 A1	3/2015

(Continued)

Primary Examiner — Eric J Zamora Alvarez
(74) *Attorney, Agent, or Firm* — McGarry Bair PC

(57) **ABSTRACT**

An engine component for a turbine engine. The engine component has a composite structure and a cover structure. The composite structure has a composite structure outer wall and a composite structure edge. The cover structure encases at least a portion of the composite structure outer wall. The cover structure has a main body. The main body extends along the at least a portion of the composite structure outer wall.

20 Claims, 12 Drawing Sheets

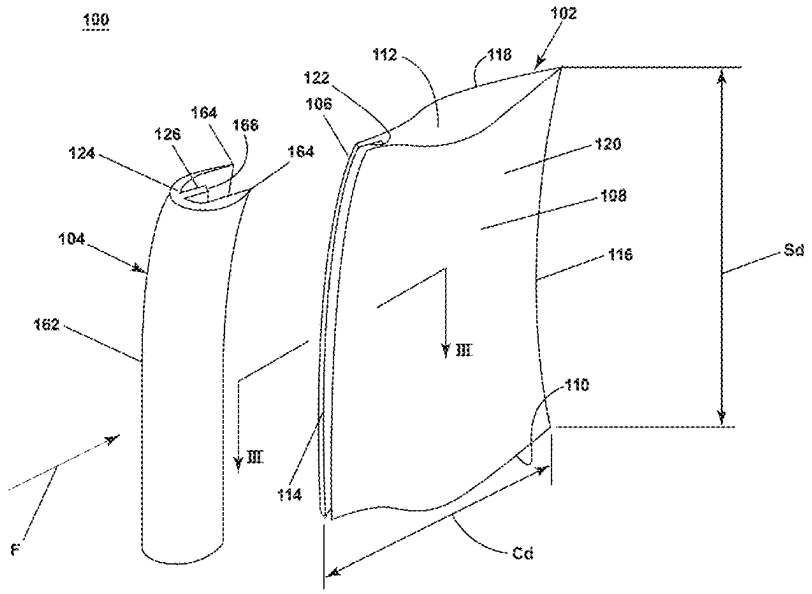

(56) **References Cited**

U.S. PATENT DOCUMENTS

10,539,025	B2 *	1/2020	Kray	F01D 9/041
11,203,938	B2 *	12/2021	Kottilingam	F01D 9/065
11,333,028	B2	5/2022	Congratel et al.	
11,352,891	B2	6/2022	Barnett	
11,680,489	B2	6/2023	Barnett	
2009/0035131	A1	2/2009	McMillan	
2014/0193271	A1	7/2014	Dudon	
2014/0255194	A1	9/2014	Jones	
2015/0026980	A1	1/2015	Tellier	
2015/0086377	A1	3/2015	Leconte	
2015/0308276	A1	10/2015	Kleinow	
2016/0032741	A1	2/2016	Perez-Duarte	
2017/0254207	A1	9/2017	Schetzel	
2017/0268349	A1	9/2017	Bryant, Jr.	
2018/0119550	A1	5/2018	Berdou	
2018/0298765	A1	10/2018	Beyer	
2018/0304418	A1	10/2018	Wiebe	
2020/0208528	A1	7/2020	Delvaux	
2022/0341329	A1	10/2022	Yadav	
2023/0129429	A1	4/2023	Kamiya	
2024/0018873	A1	1/2024	Barnett	

FOREIGN PATENT DOCUMENTS

FR	3011269	A1	4/2015
FR	3096399	A1	11/2020
RU	2350757	C1	3/2009
WO	2015191041	A1	12/2015

* cited by examiner

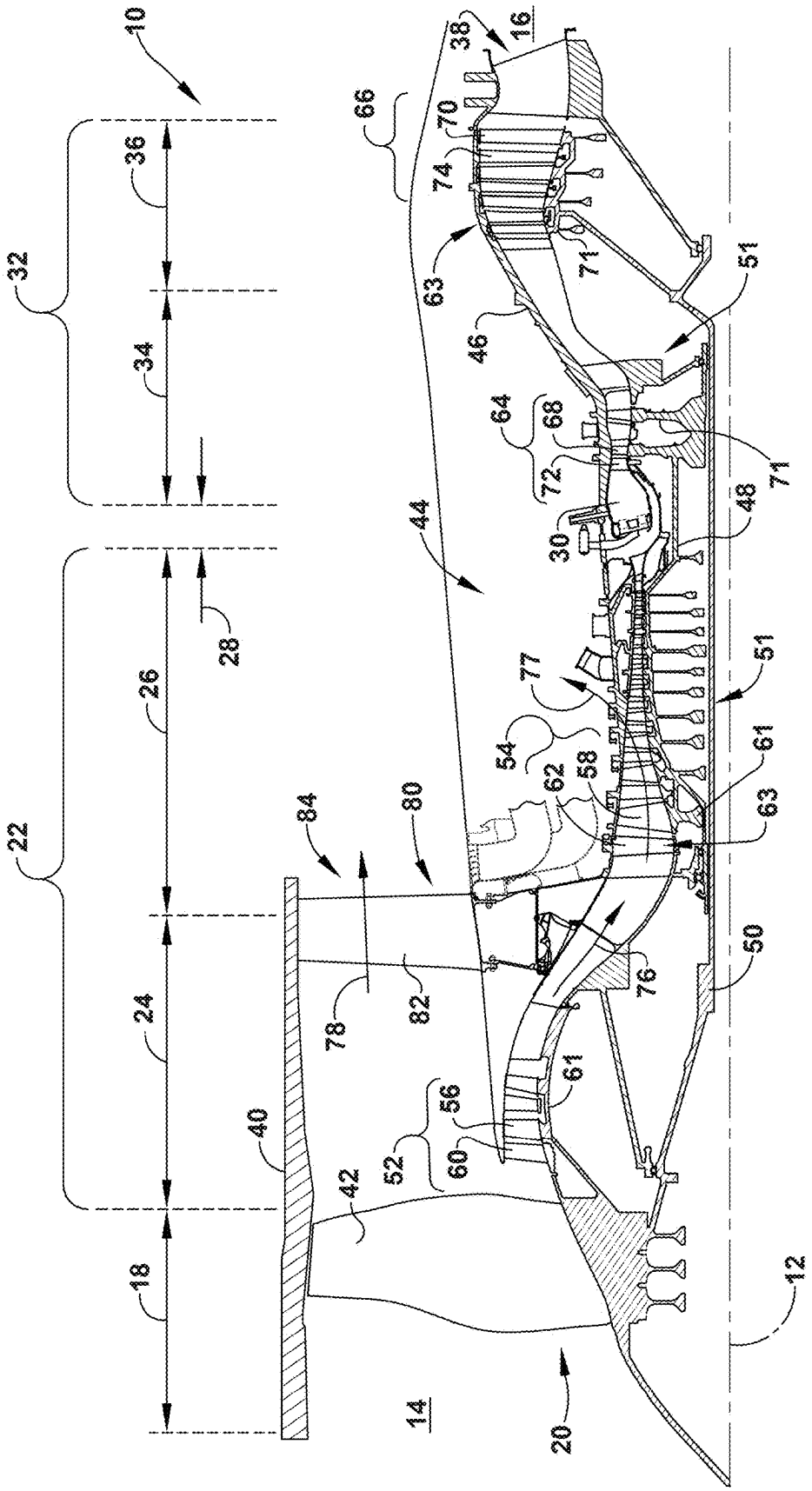
10
16
38
66
70
74
71
63
46
51
32
36
34
64
68
72
71
48
30
44
28
26
77
51
54
58
62
61
63
22
84
80
76
50
24
78
82
61
56
40
52
60
42
18
12
14
20

FIG. 1

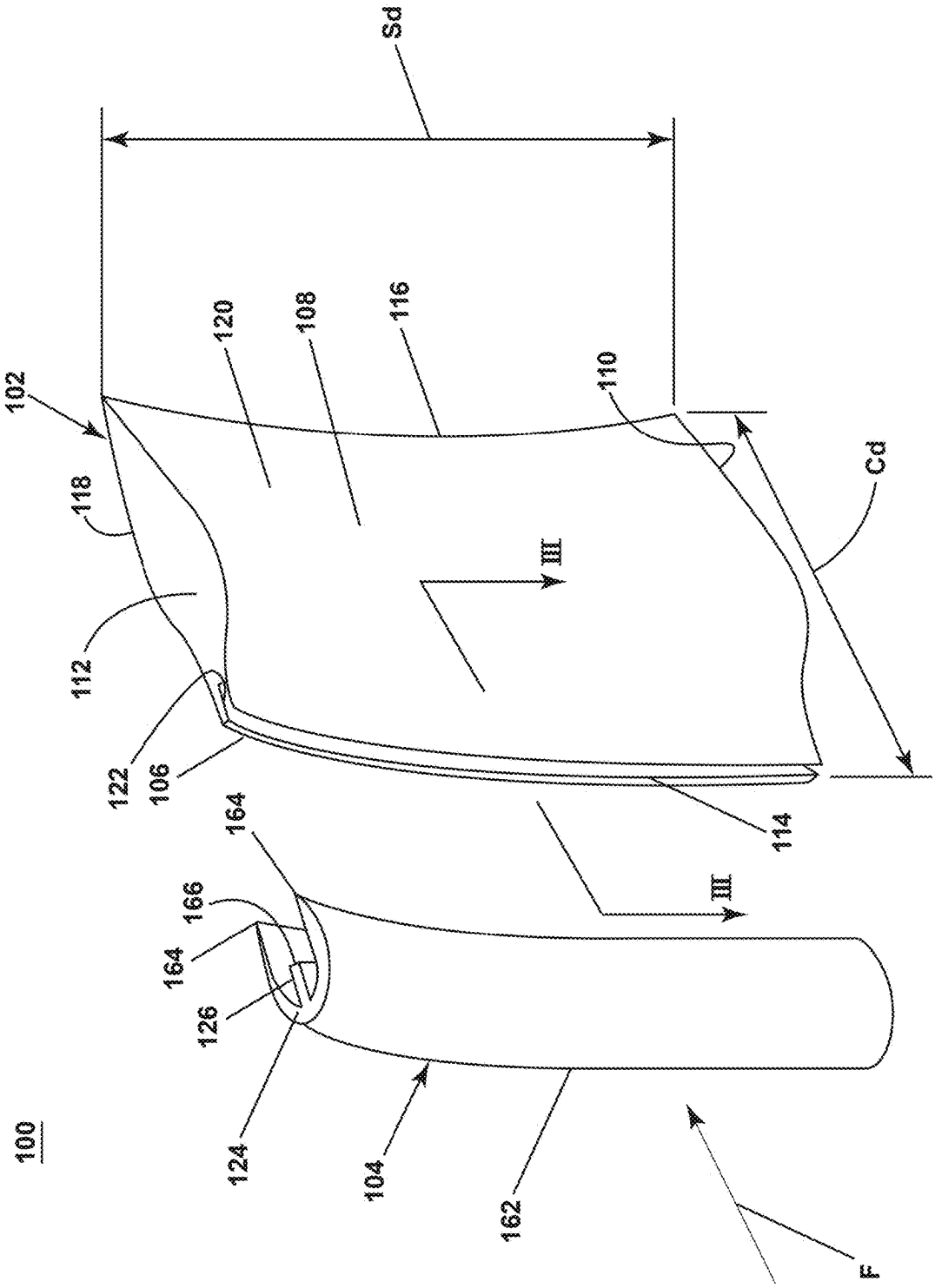
100
102
104
106
108
110
112
114
116
118
120
122
124
126
162
164
164
166
III
III
Sd
Cd
F

FIG. 2

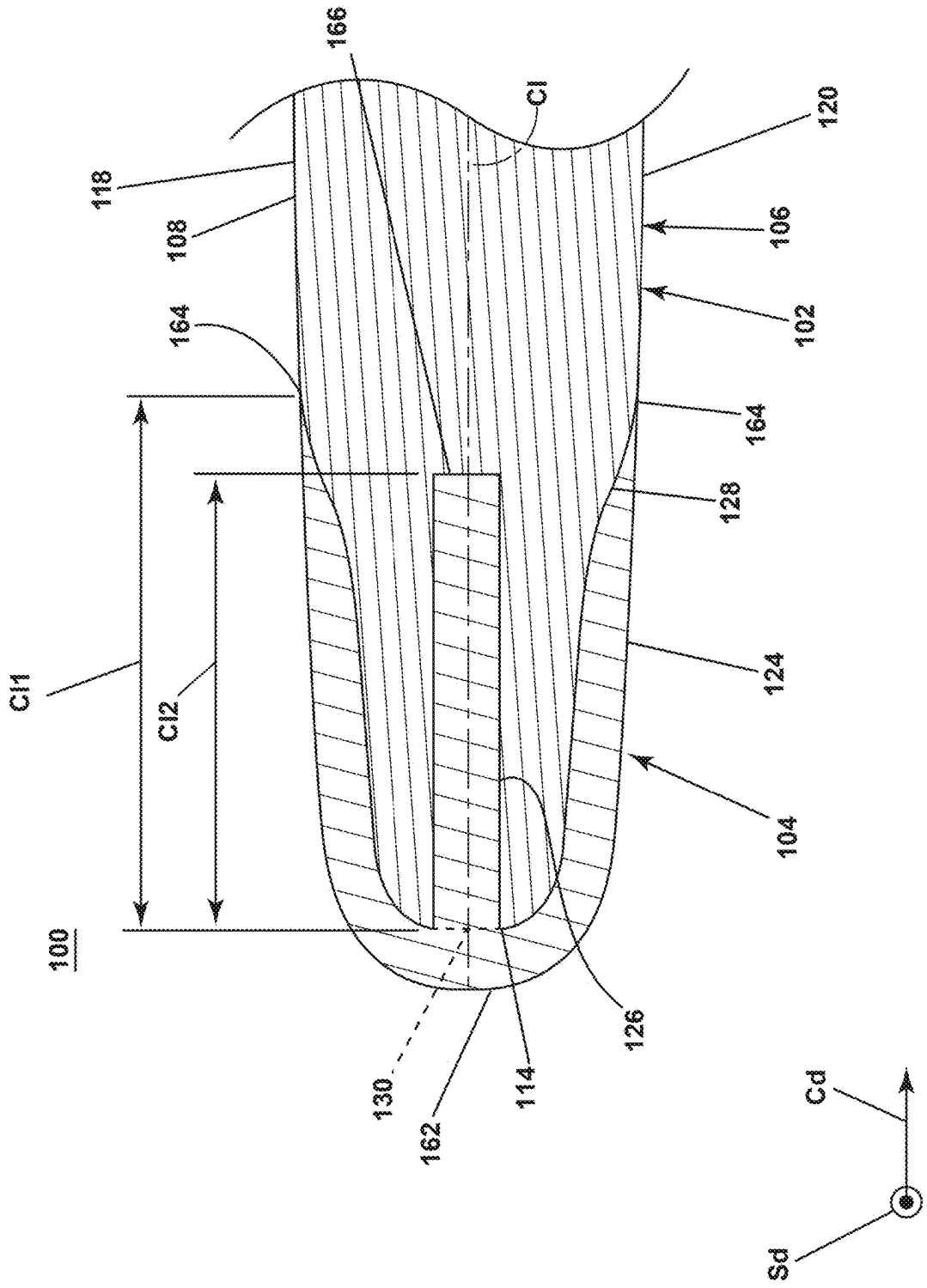
166
Cl
120
118
108
106
102
164
164
128
Cl1
Cl2
124
104
100
126
130
162
114
Cd
Sd

FIG. 3

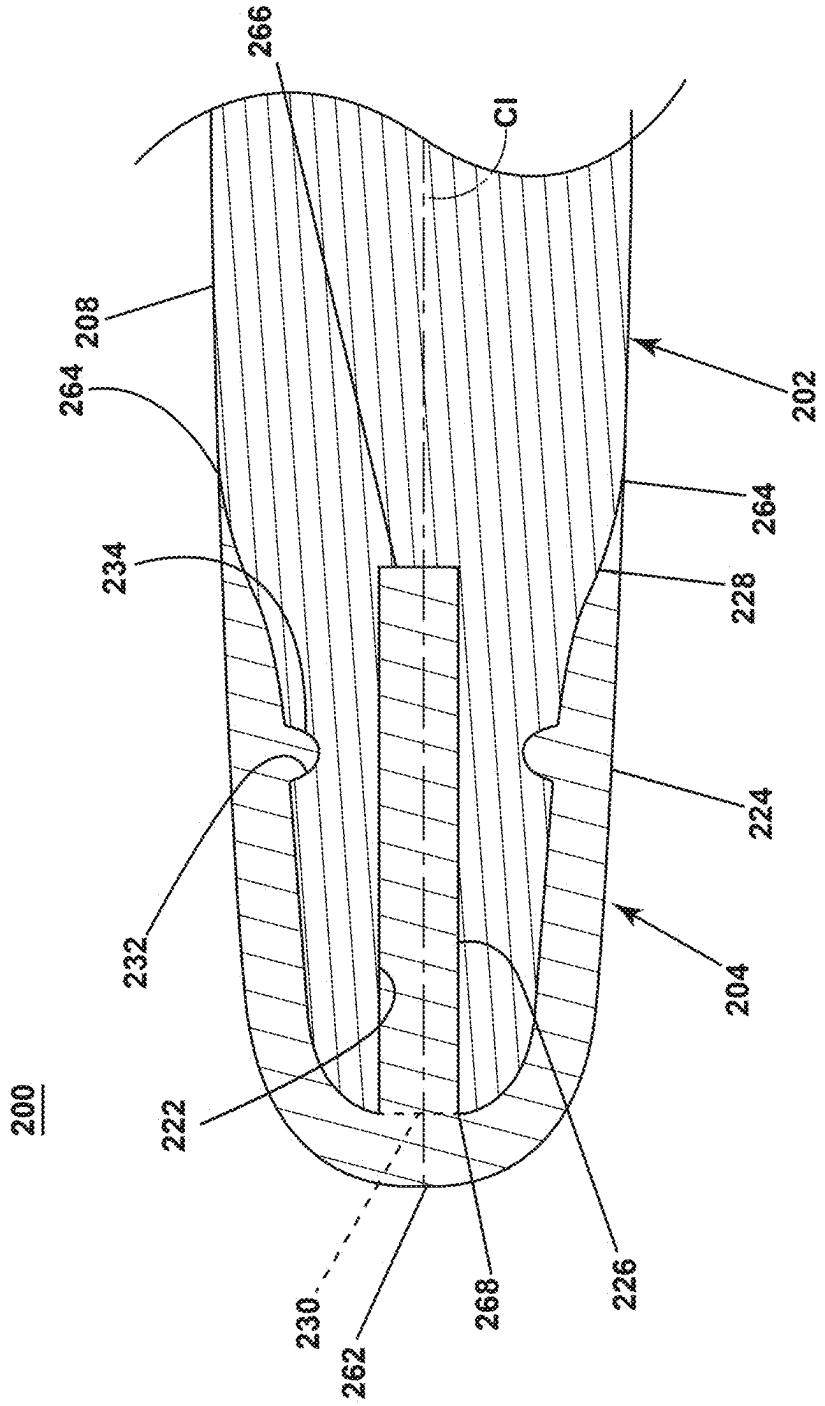
200
222
232
234
264
208
266
CI
230
262
268
226
204
224
228
264
202

FIG. 4

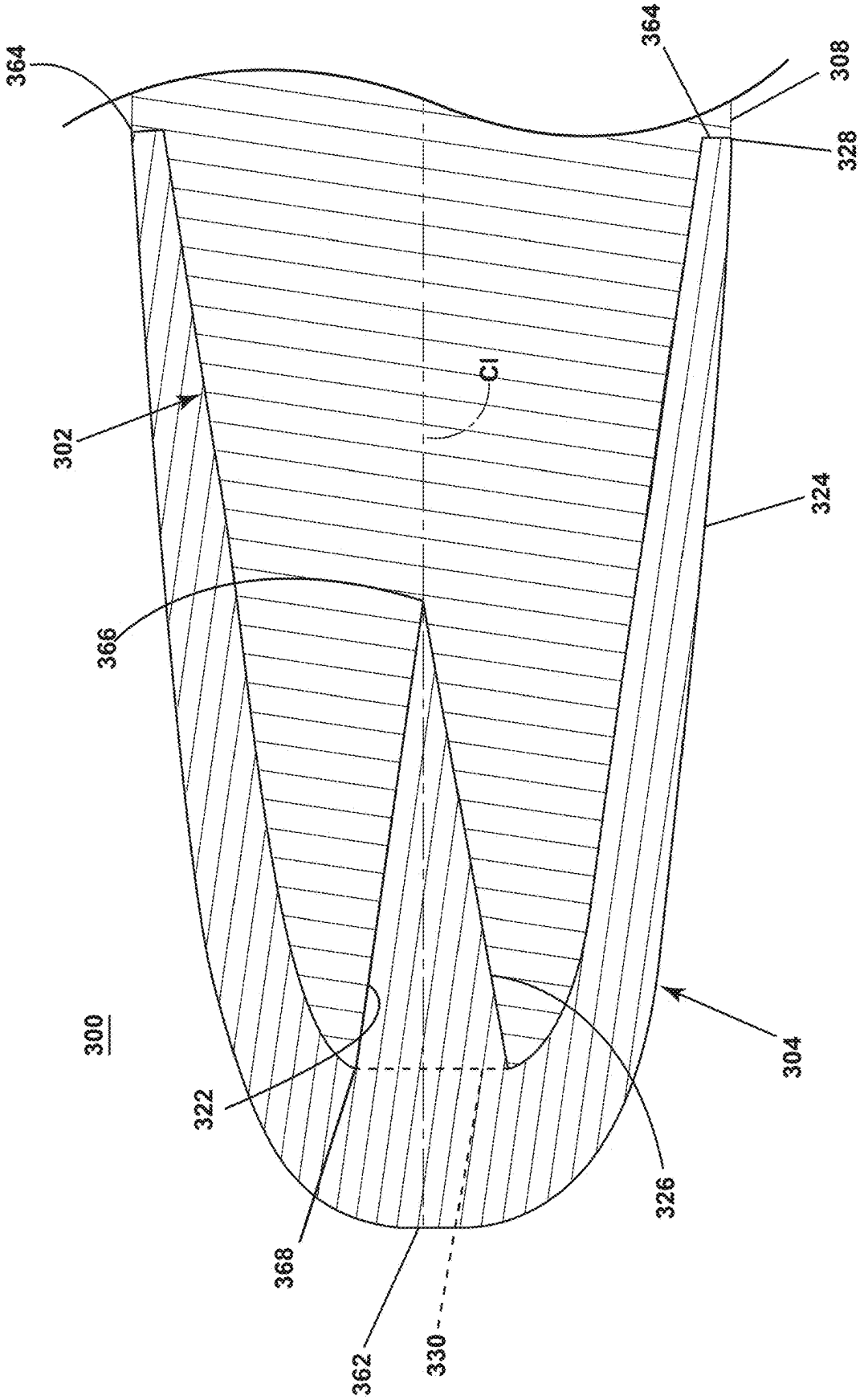

FIG. 5

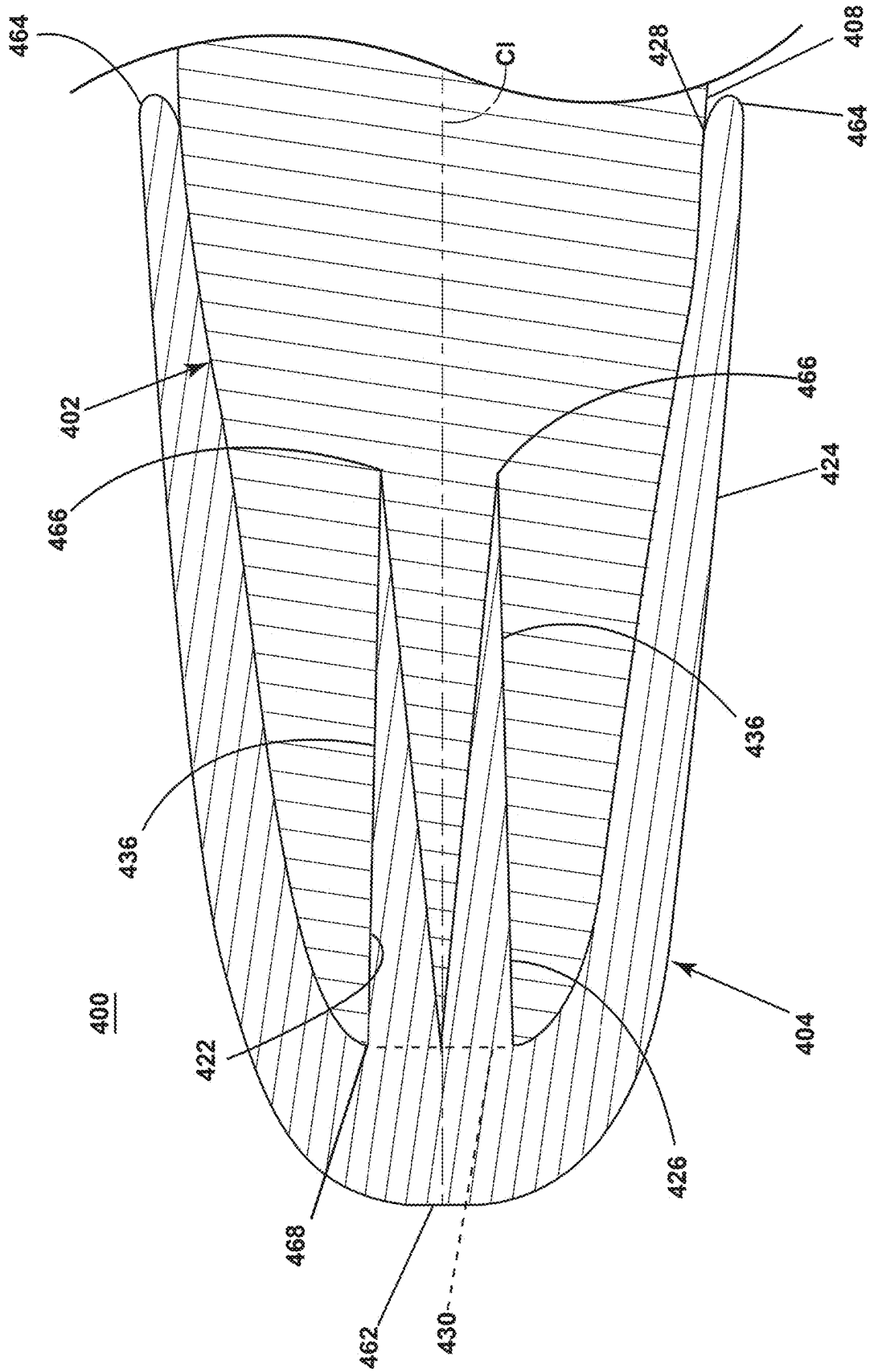
464
CI
428
408
464
402
466
466
424
436
436
400
422
404
426
468
462
430

FIG. 6

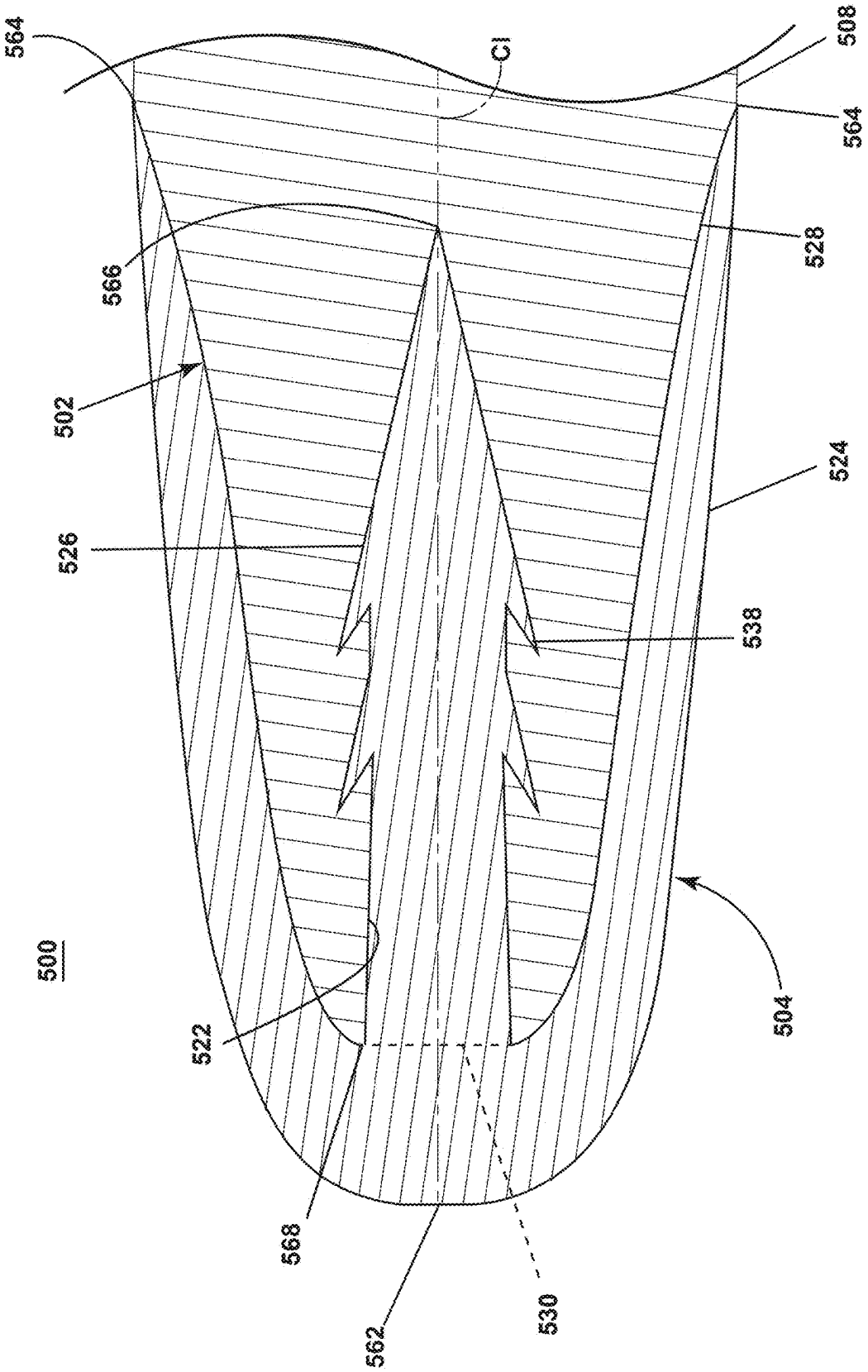

FIG. 7

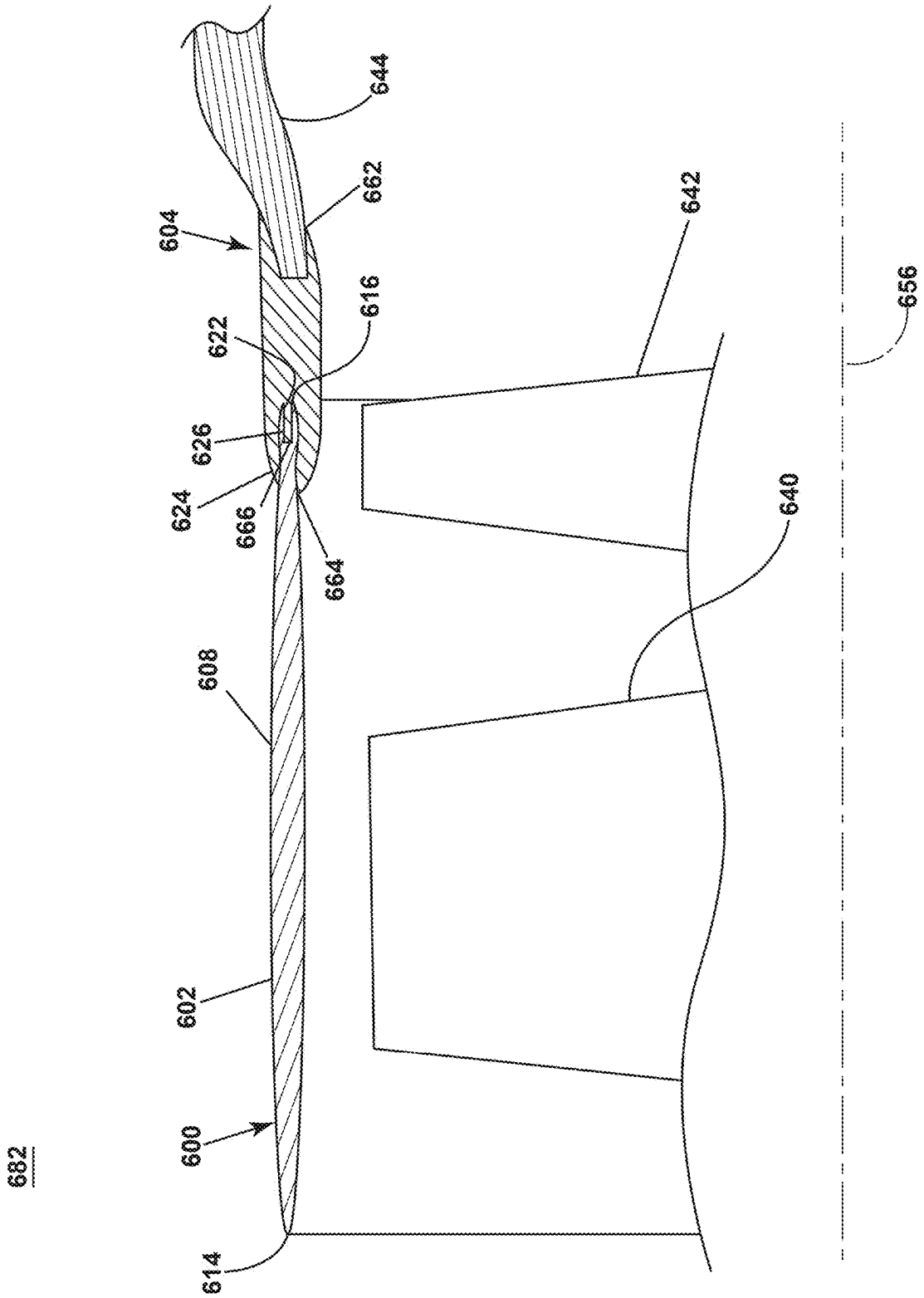
644
662
604
642
616
622
656
626
624
666
664
640
608
602
600
614
682

FIG. 8

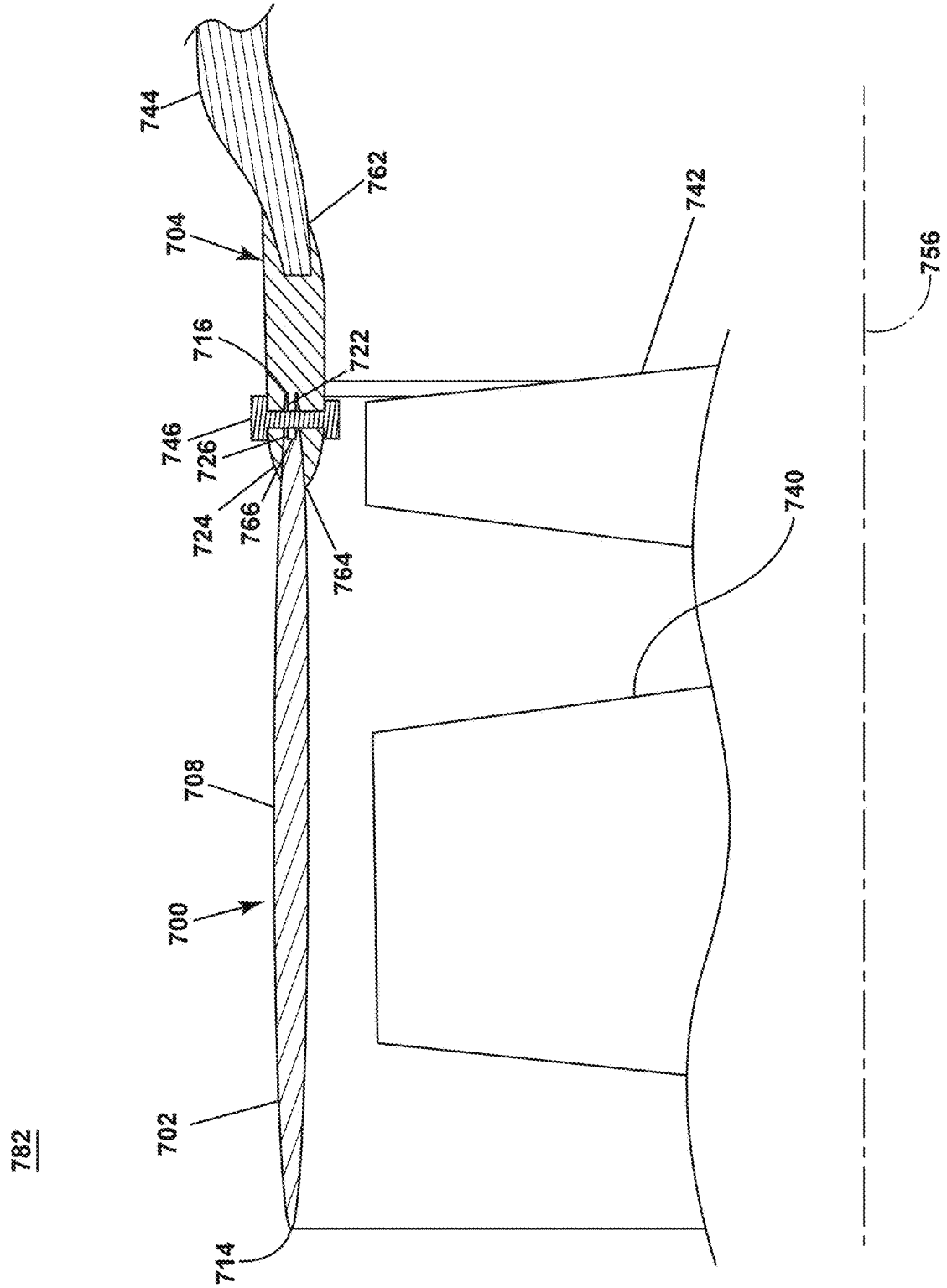
744
762
704
742
756
716
722
746
726
724
766
764
740
708
700
702
714
782

FIG. 9

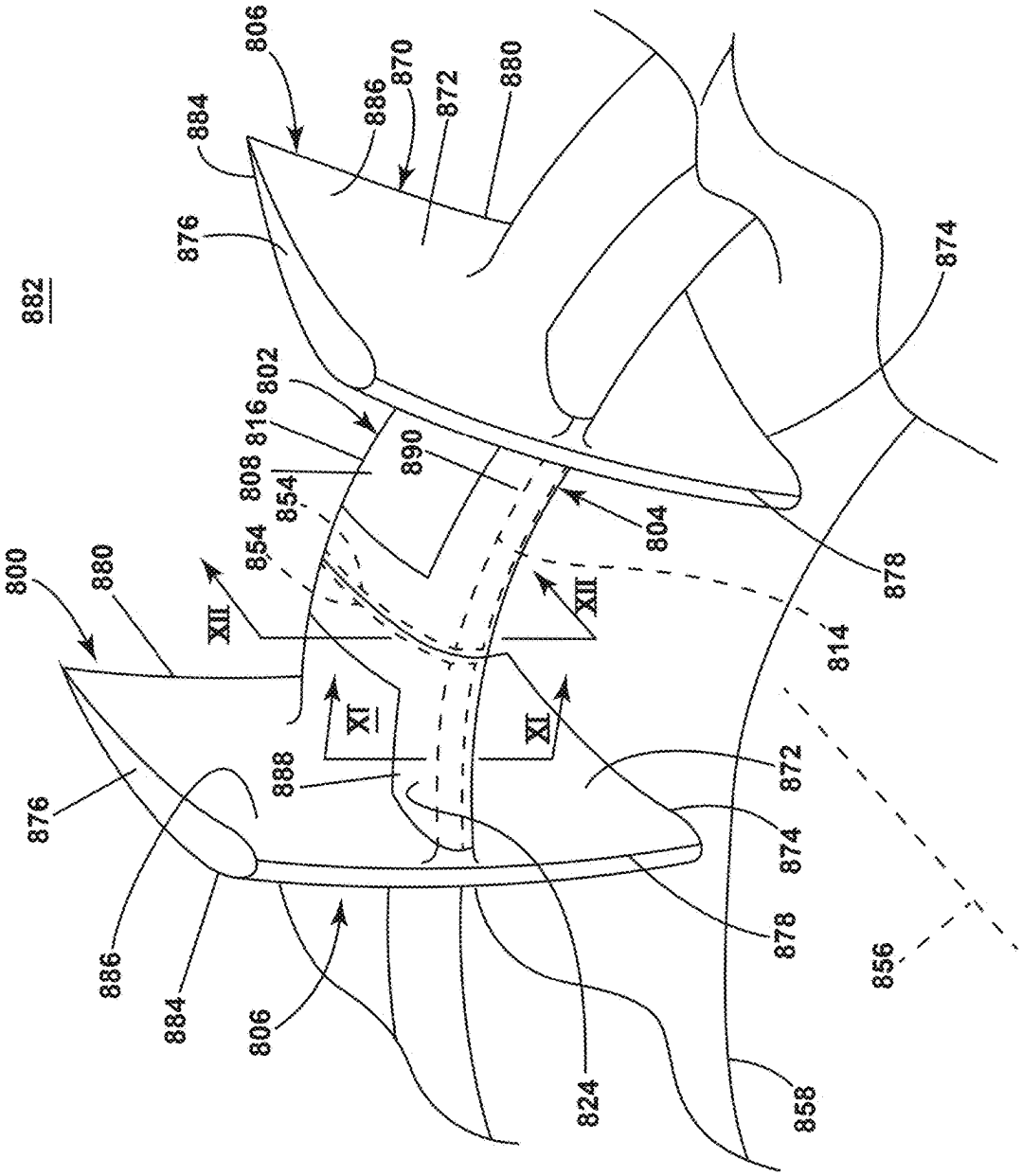
882
806
884
886
870
872
880
876
874
802
816
808
854
890
804
878
800
880
XII
XII
814
XI
XI
888
872
876
874
886
884
806
878
856
824
858

FIG. 10

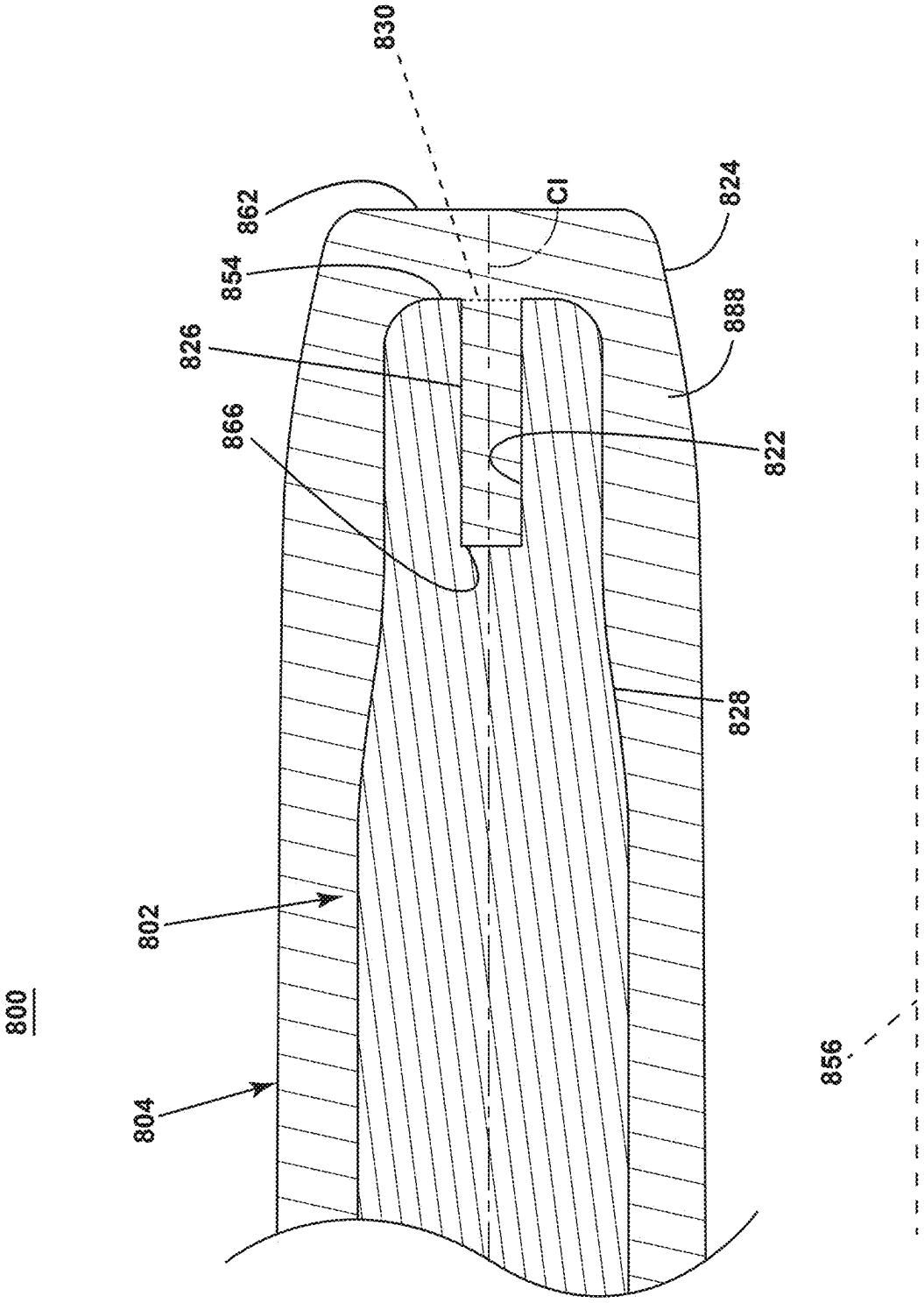

FIG. 11

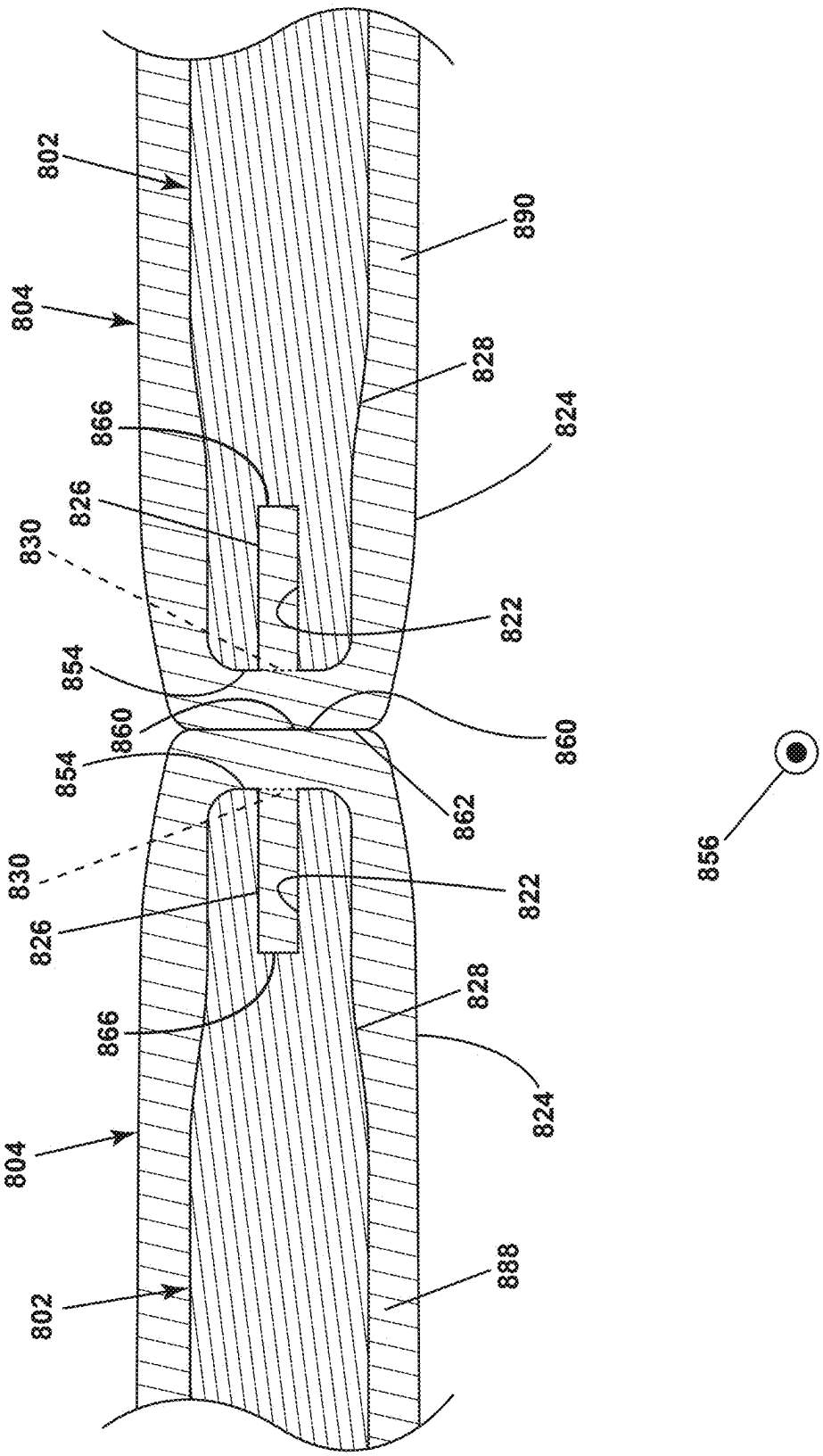
802
804
866
826
830
854
860
854
830
826
866
804
802
890
828
824
822
860
862
822
828
824
888
856

FIG. 12

ENGINE COMPONENT

TECHNICAL FIELD

The disclosure generally relates to an engine component, and more specifically to an engine component of the turbine engine, the engine component having a composite structure.

BACKGROUND

Turbine engines, and particularly gas or combustion turbine engines, are rotary engines that extract energy from a flow of gases passing through a fan with a plurality of fan blades, then into the engine through a series of compressor stages, which include pairs of rotating blades and stationary vanes, through a combustor, and then through a series of turbine stages, which include pairs of rotating blades and stationary vanes. The blades are mounted to rotating disks, while the vanes are mounted to stator disks.

During operation, air is brought into the compressor section through the fan section where it is then pressurized in the compressor and mixed with fuel and ignited in the combustor for generating hot combustion gases which flow downstream through the turbine stages where the air is expanded and exhausted out an exhaust section. The expansion of the air in the turbine section is used to drive the rotating sections of the fan section and the compressor section. The drawing in of air, the pressurization of the air, and the expansion of the air is done, in part, through rotation of various rotating blades mounted to respective disks throughout the fan section, the compressor section, and the turbine section, respectively. The rotation of the rotating blades imparts mechanical stresses along various portions of the blade; specifically, where the blade is mounted to the disk.

BRIEF DESCRIPTION OF THE DRAWINGS

A full and enabling disclosure of the present disclosure, including the best mode thereof, directed to one of ordinary skill in the art, is set forth in the specification, which makes reference to the appended figures, in which:

FIG. **1** is a schematic cross-sectional view of a turbine engine in accordance with an exemplary embodiment of the present disclosure.

FIG. **2** is an exploded illustration of an engine component suitable for use within the turbine engine of FIG. **1**, the engine component including an airfoil portion and a cover structure.

FIG. **3** is a schematic cross-sectional view of the engine component taken along sectional line III-III of FIG. **2**, further illustrating a main body and an extension of the cover structure.

FIG. **4** is a schematic cross-sectional view of an engine component suitable for use with the engine component of FIG. **2**, further illustrating a cover structure and an airfoil portion, the cover structure having a set of aligners.

FIG. **5** is a schematic cross-sectional view of an engine component suitable for use with the engine component of FIG. **2**, further illustrating an extension having a triangular shape.

FIG. **6** is a schematic cross-sectional view of an engine component suitable for use with the engine component of FIG. **2**, further illustrating an extension that is bifurcated.

FIG. **7** is a schematic cross-sectional view of an engine component suitable for use with the engine component of FIG. **2**, further illustrating an extension having a barbed shape.

FIG. **8** is a schematic cross-sectional view of an engine component suitable for use with the engine component of FIG. **2**, the engine component being a fan casing having a composite structure, the engine component having a cover structure provided along a respective portion of the composite structure.

FIG. **9** is a schematic cross-sectional view of an engine component suitable for use with the engine component of FIG. **2**, the engine component being a fan casing having a composite structure, the engine component having a cover structure mechanically coupled to the composite structure.

FIG. **10** is a schematic cross-sectional view of an engine component suitable for use with the engine component of FIG. **2**, the engine component being an airfoil assembly having a midspan shroud with a composite structure, and a cover structure provided along the composite structure.

FIG. **11** is a schematic cross-sectional view of the engine component as seen from sectional line XI-XI of FIG. **10**, further illustrating an extension of the cover structure.

FIG. **12** is a schematic cross-sectional view of the engine component as seen from sectional line XII-XII of FIG. **10**, further illustrating an interface between opposing portions of the cover structure.

DETAILED DESCRIPTION

Aspects of the disclosure herein are directed to a turbine engine including an engine component. The engine component has a composite structure and a cover structure. The cover structure includes a main body and an extension. The composite structure includes a channel. The extension is provided within the channel. The engine component is any suitable component provided within a turbine engine such as, but not limited to, an airfoil assembly, a casing (e.g., a fan casing, an engine casing, etc.), or the like.

The cover structure is used to strengthen the composite structure against external forces or otherwise from forces generated during the normal operation of the turbine engine. The cover structure can further be used coupled the composite structure to another structure of the turbine engine. For purposes of illustration, the present disclosure will be described with respect to an engine component for a turbine engine. It will be understood, however, that aspects of the disclosure described herein are not so limited and can have general applicability within other engines or within other portions of the turbine engine. For example, the disclosure can have applicability for an engine component in other engines or vehicles, and can be used to provide benefits in industrial, commercial, and residential applications.

As used herein, the term "composite structure" includes a body or an assembly that includes a composite material or collection of composite materials including, but not limited to, a polymer matrix composite (PMC), a ceramic matrix composite (CMC), a metal matrix composite (MMC), carbon fibers, a polymeric resin, a thermoplastic resin, bismaleimide (BMI) materials, polyimide materials, an epoxy resin, glass fibers, and silicon matrix materials. The composite section of the body defines the composite structure.

As used herein, the term "upstream" refers to a direction that is opposite the fluid flow direction, and the term "downstream" refers to a direction that is in the same direction as the fluid flow. The term "fore" or "forward" means in front of something and "aft" or "rearward" means behind something. For example, when used in terms of fluid flow, fore/forward can mean upstream and aft/rearward can mean downstream.

Additionally, as used herein, the terms "axial" and "longitudinal" both refer to a direction parallel to a centerline axis of an object, while the terms "radial" or "radially" refer to a direction that is perpendicular to the axial direction or away from a common center. For example, in the overall context of a turbine engine, radial refers to a direction along a ray extending between a center longitudinal axis of the engine and an outer engine circumference. Furthermore, as used herein, the term "set" or a "set" of elements can be any number of elements, including only one.

Further, as used herein, the term "fluid" or iterations thereof can refer to any suitable fluid within the gas turbine engine at least a portion of the gas turbine engine is exposed to such as, but not limited to, combustion gases, ambient air, pressurized airflow, working airflow, or any combination thereof. It is yet further contemplated that the gas turbine engine can be another suitable turbine engine such as, but not limited to, a steam turbine engine or a supercritical carbon dioxide turbine engine. As a non-limiting example, the term "fluid" can refer to steam in a steam turbine engine, or to carbon dioxide in a supercritical carbon dioxide turbine engine.

All directional references (e.g., radial, axial, proximal, distal, upper, lower, upward, downward, left, right, lateral, front, back, top, bottom, above, below, vertical, horizontal, clockwise, counterclockwise, upstream, downstream, forward, aft, etc.) are only used for identification purposes to aid the reader's understanding of the present disclosure, and do not create limitations, particularly as to the position, orientation, or use of aspects of the disclosure described herein. Connection references (e.g., attached, coupled, secured, fastened, connected, and joined) are to be construed broadly and can include intermediate members between a collection of elements and relative movement between elements unless otherwise indicated. As such, connection references do not necessarily infer that two elements are directly connected and in fixed relation to one another. The exemplary drawings are for purposes of illustration only and the dimensions, positions, order, and relative sizes reflected in the drawings attached hereto can vary.

The term "composite," as used herein is, is indicative of a component having two or more materials. A composite can be a combination of at least two or more metallic, non-metallic, or a combination of metallic and non-metallic elements or materials. Examples of a composite material can be, but are not limited to, a polymer matrix composite (PMC), a ceramic matrix composite (CMC), a metal matrix composite (MMC), carbon fibers, a polymeric resin, a thermoplastic resin, bismaleimide (BMI) materials, polyimide materials, an epoxy resin, glass fibers, and silicon matrix materials.

As used herein, a "composite" component refers to a structure or a component including any suitable composite material. Composite components, such as a composite airfoil, can include several layers or plies of composite material. The layers or plies can vary in stiffness, material, and dimension to achieve the desired composite component or composite portion of a component having a predetermined weight, size, stiffness, and strength.

One or more layers of adhesive can be used in forming or coupling composite components. Adhesives can include resin and phenolics, wherein the adhesive can require curing at elevated temperatures or other hardening techniques.

As used herein, PMC refers to a class of materials. By way of example, the PMC material is defined in part by a prepreg, which is a reinforcement material pre-impregnated with a polymer matrix material, such as thermoplastic resin. Non-limiting examples of processes for producing thermoplastic prepregs include hot melt pre-pregging in which the fiber reinforcement material is drawn through a molten bath of resin and powder pre-pregging in which a resin is deposited onto the fiber reinforcement material, by way of non-limiting example electrostatically, and then adhered to the fiber, by way of non-limiting example, in an oven or with the assistance of heated rollers. The prepregs can be in the form of unidirectional tapes or woven fabrics, which are then stacked on top of one another to create the number of stacked plies desired for the part.

Multiple layers of prepreg are stacked to the proper thickness and orientation for the composite component and then the resin is cured and solidified to render a fiber reinforced composite part. Resins for matrix materials of PMCs can be generally classified as thermosets or thermoplastics. Thermoplastic resins are generally categorized as polymers that can be repeatedly softened and flowed when heated and hardened when sufficiently cooled due to physical rather than chemical changes. Notable example classes of thermoplastic resins include nylons, thermoplastic polyesters, polyaryletherketones, and polycarbonate resins. Specific example of high performance thermoplastic resins that have been contemplated for use in aerospace applications include, polyetheretherketone (PEEK), polyetherketoneketone (PEKK), polyetherimide (PEI), polyaryletherketone (PAEK), and polyphenylene sulfide (PPS). In contrast, once fully cured into a hard rigid solid, thermoset resins do not undergo significant softening when heated, but instead thermally decompose when sufficiently heated. Notable examples of thermoset resins include epoxy, bismaleimide (BMI), and polyimide resins.

Instead of using a prepreg, in another non-limiting example, with the use of thermoplastic polymers, it is possible to utilize a woven fabric. Woven fabric can include, but is not limited to, dry carbon fibers woven together with thermoplastic polymer fibers or filaments. Non-prepreg braided architectures can be made in a similar fashion. With this approach, it is possible to tailor the fiber volume of the part by dictating the relative concentrations of the thermoplastic fibers and reinforcement fibers that have been woven or braided together. Additionally, different types of reinforcement fibers can be braided or woven together in various concentrations to tailor the properties of the part. For example, glass fibers, carbon fibers, and thermoplastic fibers could all be woven together in various concentrations to tailor the properties of the part. The carbon fibers provide the strength of the system, the glass fibers can be incorporated to enhance the impact properties, which is a design characteristic for parts located near the inlet of the engine, and the thermoplastic fibers provide the binding for the reinforcement fibers.

In yet another non-limiting example, resin transfer molding (RTM) can be used to form at least a portion of a composite component. Generally, RTM includes the application of dry fibers or matrix material to a mold or cavity. The dry fibers or matrix material can include prepreg, braided material, woven material, or any combination thereof.

Resin can be pumped into or otherwise provided to the mold or cavity to impregnate the dry fibers or matrix material. The combination of the impregnated fibers or matrix material and the resin are then cured and removed from the mold. When removed from the mold, the composite component can require post-curing processing.

It is contemplated that RTM can be a vacuum assisted process. That is, the air from the cavity or mold can be

removed and replaced by the resin prior to heating or curing. It is further contemplated that the placement of the dry fibers or matrix material can be manual or automated. As a non-limiting example, the placement of dry fibers or matrix material can be done through automatic fiber placement (AFP) or manually by hand.

The dry fibers or matrix material can be contoured to shape the composite component or direct the resin. Optionally, additional layers or reinforcing layers of a material differing from the dry fiber or matrix material can also be included or added prior to heating or curing.

As used herein, CMC refers to a class of materials with reinforcing fibers in a ceramic matrix. Generally, the reinforcing fibers provide structural integrity to the ceramic matrix. Some examples of reinforcing fibers can include, but are not limited to, non-oxide silicon-based materials (e.g., silicon carbide, silicon nitride, or mixtures thereof), non-oxide carbon-based materials (e.g., carbon), oxide ceramics (e.g., silicon oxycarbides, silicon oxynitrides, aluminum oxide (Al_2O_3), silicon dioxide (SiO_2), aluminosilicates such as mullite, or mixtures thereof), or mixtures thereof.

Some examples of ceramic matrix materials can include, but are not limited to, non-oxide silicon-based materials (e.g., silicon carbide, silicon nitride, or mixtures thereof), oxide ceramics (e.g., silicon oxycarbides, silicon oxynitrides, aluminum oxide (Al_2O_3), silicon dioxide (SiO_2), aluminosilicates, or mixtures thereof), or mixtures thereof. Optionally, ceramic particles (e.g., oxides of Si, Al, Zr, Y, and combinations thereof) and inorganic fillers (e.g., pyrophyllite, wollastonite, mica, talc, kyanite, and montmorillonite) can also be included within the ceramic matrix.

Generally, particular CMCs can be referred to as their combination of type of fiber/type of matrix. For example, C/SiC for carbon-fiber-reinforced silicon carbide; SiC/SiC for silicon carbide-fiber-reinforced silicon carbide, SiC/SiN for silicon carbide fiber-reinforced silicon nitride; SiC/SiC—SiN for silicon carbide fiber-reinforced silicon carbide/silicon nitride matrix mixture, etc. In other examples, the CMCs can be comprised of a matrix and reinforcing fibers comprising oxide-based materials such as aluminum oxide (Al_2O_3), silicon dioxide (SiO_2), aluminosilicates, and mixtures thereof. Aluminosilicates can include crystalline materials such as mullite ($3Al_2O_3 \cdot 2SiO_2$), as well as glassy aluminosilicates.

In certain non-limiting examples, the reinforcing fibers may be bundled and/or coated prior to inclusion within the matrix. For example, bundles of the fibers may be formed as a reinforced tape, such as a unidirectional reinforced tape. A plurality of the tapes may be laid up together to form a preform component. The bundles of fibers may be impregnated with a slurry composition prior to forming the preform or after formation of the preform. The preform may then undergo thermal processing, and subsequent chemical processing to arrive at a component formed of a CMC material having a desired chemical composition. For example, the preform may undergo a cure or burn-out to yield a high char residue in the preform, and subsequent melt-infiltration with silicon, or a cure or pyrolysis to yield a silicon carbide matrix in the preform, and subsequent chemical vapor infiltration with silicon carbide. Additional steps may be taken to improve densification of the preform, either before or after chemical vapor infiltration, by injecting it with a liquid resin or polymer followed by a thermal processing step to fill the voids with silicon carbide. CMC material as used herein may be formed using any known or hereinafter developed methods including but not limited to melt infiltration, chemical vapor infiltration, polymer impregnation pyrolysis (PIP), or any combination thereof.

Such materials, along with certain monolithic ceramics (i.e., ceramic materials without a reinforcing material), are particularly suitable for higher temperature applications. Additionally, these ceramic materials are lightweight compared to superalloys, yet can still provide strength and durability to the component made therefrom. Therefore, such materials are currently being considered for many gas turbine components used in higher temperature sections of gas turbine engines, such as airfoils (e.g., turbines, and vanes), combustors, shrouds and other like components, which would benefit from the lighter-weight and higher temperature capability these materials can offer.

The term "metallic" as used herein is indicative of a material that includes metal such as, but not limited to, titanium, iron, aluminum, stainless steel, and nickel alloys. A metallic material or alloy can be a combination of at least two or more elements or materials, where at least one is a metal.

FIG. **1** is a schematic cross-sectional diagram of a turbine engine **10** for an aircraft. The turbine engine **10** has a generally longitudinally extending axis or centerline **12** extending forward **14** to aft **16**. The turbine engine **10** includes, in a downstream serial flow relationship, a fan section **18** including a fan **20**, a compressor section **22** including a booster or low pressure (LP) compressor **24** and a high pressure (HP) compressor **26**, a combustion section **28** including a combustor **30**, a turbine section **32** including an HP turbine **34**, and an LP turbine **36**, and an exhaust section **38**.

The fan section **18** includes a fan casing **40** surrounding the fan **20**. The fan **20** includes a set of fan blades **42** disposed radially about the engine centerline **12**. The HP compressor **26**, the combustor **30**, and the HP turbine **34** form an engine core **44** of the turbine engine **10**, which generates combustion gases. The engine core **44** is surrounded by an engine casing **46**, which can be coupled with the fan casing **40**.

An HP shaft **48** is disposed coaxially about the engine centerline **12** of the turbine engine **10** and drivingly connects the HP turbine **34** to the HP compressor **26**. An LP shaft **50**, which is disposed coaxially about the engine centerline **12** of the turbine engine **10** within the larger diameter annular HP shaft **48**, drivingly connects the LP turbine **36** to the LP compressor **24** and fan **20**. The shafts **48**, **50** are rotatable about the engine centerline **12** and couple to a plurality of rotatable elements, which can collectively define a rotor **51**.

The LP compressor **24** and the HP compressor **26** respectively include a plurality of compressor stages **52**, **54**, in which a set of compressor blades **56**, **58** rotate relative to a corresponding set of static compressor vanes **60**, **62** to compress or pressurize the stream of fluid passing through the stage. In a single compressor stage **52**, **54**, the set of compressor blades **56**, **58** can be provided in a ring and can extend radially outward relative to the engine centerline **12**, from a blade platform to a tip, while the corresponding static compressor vanes **60**, **62** are positioned upstream of and adjacent to the set of compressor blades **56**, **58**. It is noted that the number of blades, vanes, and compressor stages shown in FIG. **1** were selected for illustrative purposes only, and that other numbers are possible.

The set of compressor blades **56**, **58** for a stage of the compressor **24**, **26** can be mounted to (or integral to) a disk **61**, which is mounted to the corresponding one of the HP and LP shafts **48**, **50**. The static compressor vanes **60**, **62** for a

stage of the compressor **24**, **26** can be mounted to the engine casing **46** in a circumferential arrangement.

The HP turbine **34** and the LP turbine **36** respectively include a plurality of turbine stages **64**, **66**, in which a set of turbine blades **68**, **70** are rotated relative to a corresponding set of turbine vanes **72**, **74**, also referred to as a nozzle, to extract energy from the stream of fluid passing through the stage. In a single turbine stage **64**, **66**, the set of turbine blades **68**, **70** can be provided in a ring and can extend radially outward relative to the engine centerline **12** while the corresponding set of turbine vanes **72**, **74** are positioned upstream of and adjacent to the set of turbine blades **68**, **70**. It is noted that the number of blades, vanes, and turbine stages shown in FIG. **1** were selected for illustrative purposes only, and that other numbers are possible.

The set of turbine blades **68**, **70** for a stage of the turbine can be mounted to a disk **71**, which is mounted to the corresponding one of the HP and LP shafts **48**, **50**. The set of turbine vanes **72**, **74** for a stage of the compressor can be mounted to the engine casing **46** in a circumferential arrangement.

Complementary to the rotor portion, the stationary portions of the turbine engine **10**, such as the static compressor vanes **60**, **62** or the set of turbine vanes **72**, **74** among the compressor and turbine sections **22**, **32**, respectively, are also referred to individually or collectively as a stator **63**. As such, the stator **63** can refer to the combination of non-rotating elements throughout the turbine engine **10**.

It will be appreciated that the turbine engine **10** can be split into at last two separate portions: a rotor portion and a stator portion. The rotor portion can be defined as any portion of the turbine engine **10** that rotates about a respective rotational axis. The stator portion can be defined by a combination of non-rotating elements provided within the turbine engine **10**. As a non-limiting example, the rotor portion can include one or more of the set of fan blades **42**, the set of compressor blades **56**, **58**, or the set of turbine blades **68**, **70**. As a non-limiting example, the stator portion can include one or more of the set of airfoil guide vanes **82** (described below), the static compressor vanes **60**, **62**, or the set of turbine vanes **72**, **74**.

In operation, the airflow exiting the fan section **18** is split such that a portion of the airflow is channeled into the LP compressor **24**, which then supplies a pressurized airflow **76** to the HP compressor **26**, which further pressurizes the air. The pressurized airflow **76** from the HP compressor **26** is mixed with fuel in the combustor **30** and ignited, thereby generating combustion gases. Some work is extracted from these gases by the HP turbine **34**, which drives the HP compressor **26**. The combustion gases are discharged into the LP turbine **36**, which extracts additional work to drive the LP compressor **24**, and the exhaust gas is ultimately discharged from the turbine engine **10** via the exhaust section **38**. The driving of the LP turbine **36** drives the LP shaft **50** to rotate the fan **20** and the LP compressor **24**.

A portion of the pressurized airflow **76** can be drawn from the compressor section **22** as bleed air **77**. The bleed air **77** can be drawn from the pressurized airflow **76** and provided to engine components for cooling. The temperature of pressurized airflow **76** entering the combustor **30** is significantly increased above the bleed air temperature. The bleed air **77** may be used to reduce the temperature of the core components downstream of the combustor **30**. The bleed air **77** can also be utilized by other systems.

Some of the air supplied by the fan **20** can bypass the engine core **44** and be used for cooling of portions, especially hot portions, of the turbine engine **10**, and/or used to cool or power other aspects of the aircraft. In the context of a turbine engine, the hot portions of the engine are normally downstream of the combustor **30**, especially the turbine section **32**, with the HP turbine **34** being the hottest portion as it is directly downstream of the combustion section **28**. Other sources of cooling fluid can be, but are not limited to, fluid discharged from the LP compressor **24** or the HP compressor **26**.

A remaining portion of the airflow exiting the fan section **18**, referred to as a bypass airflow **78**, bypasses the LP compressor **24** and engine core **44** and exits the turbine engine **10** through a stationary vane row, and more particularly an outlet guide vane assembly **80**, comprising a set of airfoil guide vanes **82**, at a fan exhaust side **84**. More specifically, a circumferential row of radially extending airfoil guide vanes **82** are utilized adjacent the fan section **18** to exert at least some directional control of the bypass airflow **78**.

The turbine engine **10**, as illustrated, is a turbofan engine. It will be appreciated, however, that the turbine engine **10** can be any suitable engine such as, but not limited to, a turboprop engine, a turboshaft engine, a ducted turbofan engine, an unducted engine, or an open rotor turbine engine. As a non-limiting example, the turbine engine **10** can be an unducted turbine engine. The unducted turbine engine includes a set of external fan blades and external fan vanes that extend radially outward from a nacelle or exterior casing that houses the engine core. The external fan blades and the external fan fans are similar in function with respect to the set of fan blades **42** and the set of airfoil guide vanes **82**, respectively, of the turbine engine **10**. It will be appreciated that at least a portion of the external fan blades or the external vane blades can define a radial extreme (e.g., a radially farthest portion from the engine centerline **12**) in an unducted turbine engine. In other words, no portion of the turbine engine is provided radially outward from the external fan blades or external fan vanes in an unducted turbine engine.

FIG. **2** is an exploded illustration of an engine component **100** suitable for use within the turbine engine **10** of FIG. **1**. The engine component includes a composite structure **102** and a cover structure **104**. For purposes of illustration, the cover structure **104** is exploded from the composite structure **102**. The composite structure **102** can include an airfoil portion **106** such that the engine component **100** is an airfoil assembly suitable for use as a blade, vane, airfoil, or other component of any turbine engine, such as, but not limited to, a gas turbine engine, a turboprop engine, a turboshaft engine, a ducted turbofan engine, the turbine engine **10** (FIG. **1**), or an unducted turbine engine. The airfoil portion **106** is any suitable airfoil of the turbine engine **10** such as, but not limited to, the set of fan blades **42** (FIG. **1**), the set of airfoil guide vanes **82** (FIG. **1**), the set of compressor blades **56**, **58** (FIG. **1**), the set of compressor vanes **60**, **62** (FIG. **1**), the set of turbine blades **68**, **70** (FIG. **1**), or the set of turbine vanes **72**, **74** (FIG. **1**).

The airfoil portion **106** includes a composite structure outer wall **108**. The composite structure outer wall **108** extends between a composite structure leading edge **114** and a composite structure trailing edge **116** to define a chordwise direction (Cd). The composite structure outer wall **108** extends between a composite structure root **110** and a composite structure tip **112** to define a spanwise direction (Sd). The composite structure outer wall **108** defines a pressure side **120** and a suction side **118**.

The composite structure **102** includes a channel **122**. As a non-limiting example, the channel **122** extends along an

edge of the airfoil portion **106**. As a further non-limiting example, the channel **122** extends along at least one of the composite structure leading edges **114**, the composite structure tip **112**, the composite structure trailing edge **116**, the composite structure root **110**, or a combination thereof. In the illustrated example, the channel **122** extends along the composite structure leading edge **114** in the spanwise direction (Sd). It will be appreciated that the channel **122** can be segmented or continuous. The channel **122** can extend along an entirety of or less than an entirety of a respective edge of the airfoil portion **106**. As a non-limiting example, the channel **122** extends along an entirety of a span (e.g., extension in the spanwise direction (Sd)) of the composite structure leading edge **114** between the composite structure root **110** and the composite structure tip **112**.

At least a portion of the composite structure **102** includes a composite material. As a non-limiting example, the composite structure outer wall **108** can include a composite material. By way of non-limiting example, the composite structure outer wall **108** can include at least a PMC portion, a polymeric portion, or both. The PMC portion can include, but is not limited to, a matrix of thermoset (epoxies, phenolics) or thermoplastic (polycarbonate, polyvinylchloride, nylon, acrylics) and embedded glass, carbon, steel, or a combination thereof.

The cover structure **104** includes a main body **124** and an extension **126** extending from the main body **124**. The main body **124** defines an exterior portion of the cover structure **104**. The main body **124** and the extension **126** are integrally formed with or coupled to one another.

The cover structure **104** includes a cover structure edge **162**, a set of main body distal ends **164**, and an extension distal end **166**. The cover structure edge **162**, as illustrated, is a farthest forward portion of the cover structure **104** in the chordwise direction (Cd).

The total distance that the extension **126** extends in the spanwise direction (Sd) can be equal to the total distance that the main body **124** extends in the spanwise direction (Sd). The total distance that the extension **126** extends in the spanwise direction (Sd) can be different from the total distance that the main body **124** extends in the spanwise direction (Sd). As a non-limiting example, the extension **126** can extend between 75% of the composite structure leading edge **114** in the spanwise direction (Sd), while the main body **124** can extend between greater than 75% of the composite structure leading edge **114** in the spanwise direction (Sd).

The cover structure **104** includes at least one of a metallic material, a plastic material, or a combination thereof. The material of the cover structure **104** can be, but is not limited to, titanium, aluminum, polyurethane, or the like. As a non-limiting example, the cover structure **104** can include a metallic material such that the cover structure **104** is defined as a metallic cover structure.

The cover structure **104** is coupled to the composite structure **102** through any suitable coupling method such as, but not limited to, welding, adhesion, bonding, fastening, friction fit, or the like. The extension **126** is sized to fit within the channel **122**. The extension **126** is received within the channel **122** when the cover structure **104** is coupled to the composite structure **102**. The cover structure **104**, when coupled to the composite structure **102**, overlies a respective portion of the composite structure **102**. Put another way, the cover structure **104** covers a respective portion of the composite structure **102**.

The composite structure **102** and the cover structure **104** can be coupled to each other after assembly or formation of the composite structure **102**. As a non-limiting example, the composite structure **102** and the cover structure **104** can be coupled to one another after curing the composite structure **102**. The composite structure **102** and the cover structure **104** can be integrally formed with one another. As a non-limiting example, the cover structure **104** can be positioned along an uncured version of the composite structure **102**. The cover structure **104** and the composite structure **102** can subsequently be co-cured such that the cover structure **104** and the composite structure **102** are integrally formed and form a unitary body. As a non-limiting example, the cover structure **104** and the composite structure **102** can be integrally formed through any suitable method such as, but not limited to, electroforming, 3D printing, or the like.

The cover structure edge **162** defines an engine component leading edge for the engine component **100**. It will be appreciated, however, that the cover structure edge **162** varies based on the location where the cover structure **104** is provided. As a non-limiting example, the cover structure **104** can be provided along the composite structure trailing edge **116** to define at least a portion of an engine component trailing edge. As a non-limiting example, the cover structure can be provided along the composite structure tip **112** to define at least a portion of an engine component tip. As a non-limiting example, the cover structure can be provided along the composite structure root **110** to define at least a portion of an engine component root. As a non-limiting example, the cover structure can be provided along the composite structure outer wall **108** to define at least a portion of an engine component outer wall. It will be appreciated that the engine component **100** includes any number of one or more cover structures **104** provided along any suitable portion of the composite structure **102**.

It will be appreciated that the engine component **100** is any suitable engine component **100**. As a non-limiting example, the engine component **100** can be an airfoil assembly including an airfoil portion with a dovetail that extends radially inward from the root (e.g., the composite structure root **110**). In such a case, the cover structure **104** can extend over or terminate prior to the dovetail portion. Additional non-limiting examples of the engine component **100** include, but are not limited to, a casing (e.g., a fan casing, a combustor liner, an engine casing, etc.), an airfoil portion including a shroud (e.g., a midspan shroud, a tip shroud, an outer platform, an inner platform, etc.), an airfoil portion extending from an inner band coupled to the root, an airfoil assembly including a spar extending from the root of the airfoil portion and being coupled to a trunnion (e.g., a variable pitch airfoil assembly), an airfoil portion coupled to a disk (e.g., the disk **61**, **71** of FIG. **1**), or the like.

During operation, the engine component **100** is subjected to a force (F). The force (F) is any force that may be experienced during operation of the turbine engine (e.g., the turbine engine **10** of FIG. **1**). As a non-limiting example, the force (F) can be, but is not limited to, a force of an airflow flowing over the engine component **100** (e.g., the pressurized airflow **76** of FIG. **1**), a rotational force exerted on the engine component **100** due to a rotation of the engine component **100**, an external force applied to the engine component **100** (e.g., a bird strike), or a combination thereof. The force (F) is illustrated in the chordwise direction (Cd). The force (F) can be in any suitable direction.

The cover structure **104** is used to strengthen certain portions of the composite structure **102** (e.g., the composite structure leading edge **114**) to ensure that the engine component **100** can withstand the force (F). It is contemplated that without the cover structure **104**, the force (F) could damage certain portions of the composite structure **102**.

FIG. **3** is a schematic cross-sectional view of the engine component **100** taken along sectional line III-III of FIG. **2**. The sectional line III-III is perpendicular to the spanwise direction (Sd). The sectional line III-III, while illustrated as being about halfway between the composite structure root **110** and the composite structure tip **112** can be provided at any suitable portion of the composite structure leading edge **114** inclusive of the endpoints (e.g., the composite structure tip **112** and the composite structure root **110**).

The main body **124** and a respective portion of the airfoil portion **106** meet at a joint **128**. The joint **128** is formed such that an exterior portion of the main body **124** extends continuously from the composite structure outer wall **108** when the cover structure **104** is coupled to the composite structure **102**. Put another way, the joint **128** can be formed such that an outer surface of the cover structure **104** is flush against the composite structure outer wall **108**. Alternatively, the joint **128** can be formed such that the outer surface of the cover structure **104** is recessed (e.g., radially closer to the centerline (Cl)) with respect to where the composite structure outer wall **108** at the main body distal end **164**. The joint **128** is any suitable joint such as, but not limited to, a scarf joint, a butt joint, a lap joint, or the like.

The extension **126** and the main body **124** interface at a transition **130** shown in phantom lines. The extension **126** includes any suitable cross-sectional area when viewed along the sectional line III-III.

The engine component **100** includes a centerline (Cl) extending between the cover structure edge **162** and the composite structure trailing edge **116** (FIG. **2**). The centerline (Cl), in terms of the engine component **100** being the airfoil assembly, is a mean camber line. It will be appreciated, however, that the centerline (Cl) is any suitable central line extending between opposing edges of the engine component **100** and being equidistant between opposing surfaces of the composite structure outer wall **108**.

The extension **126** has a cross-sectional area when viewed along a plane extending along the centerline (Cl) (e.g., the sectional line III-III). The cross-sectional area, as illustrated, is rectangular. It will be appreciated, however, that the cross-sectional area is any suitable shape such as, but not limited to, circular, ovular, triangular, rectangular, hexagonal, or the like. As a non-limiting example, the cross-sectional area can be defined by an undulating (wave-like) cross-section. The extension **126** can be symmetric about the centerline (Cl). The extension **126** can be asymmetric about the centerline (Cl).

The cross-sectional area of the extension **126** can be constant or vary along an extent of the channel **122**. As a non-limiting example, the cross-sectional area of the extension **126** can vary in the spanwise direction (Sd). As a non-limiting example, the cross-sectional area of the extension **126** at the composite structure root **110** (FIG. **2**) can be triangular, the cross-sectional area of the extension **126** halfway between the composite structure root **110** and the composite structure tip **112** (FIG. **2**) can be rectangular, while the cross-sectional area of the extension **126** at the composite structure tip **112** can be ovular.

The variation of the cross-sectional area of the extension **126** is based on the cross-sectional area of the composite structure **102** where the cover structure **104** overlays the composite structure **102** (e.g., along the composite structure leading edge **114**). As a non-limiting example, the composite structure **102** can be swept along the composite structure leading edge **114** or otherwise include a non-constant cross-sectional area in the spanwise direction (Sd). These variations in the cross-sectional area of the composite structure **102** affect the formation of the extension **126**. As a non-limiting example, a smaller cross-sectional area of the composite structure **102**, in turn, means that the extension **126** will have to have a smaller size than areas where the composite structure has a larger cross-sectional area. Further, it is contemplated that certain shapes of the extension **126** have a better resistance to certain forces (e.g., the force (F) of FIG. **3**). As a non-limiting example, if the force (F) is an external force (e.g., a bird strike), the force (F) will have a larger impact closer to the composite structure tip **112** than the composite structure root **110** in the spanwise direction (Sd). As such, the cover structure **104**, specifically the extension **126**, can have a more robust design (e.g., larger cross-sectional area with a larger extension **126**) closer to the composite structure tip **112** than the composite structure root **110**.

A farthest downstream or axially displaced main body distal end of the set of main body distal ends **164** is provided a first centerline length (Cl**1**) from the main body **124** at the transition **130**. The main body **124** can be symmetric about the centerline (Cl). The main body **124** can be asymmetric about the centerline (Cl).

The extension **126** extends in the chordwise direction (Cd) between the transition **130** and the extension distal end **166** a second centerline length (Cl**2**). The first centerline length (Cl**1**) is greater than or equal to the second centerline length (Cl**2**). As a non-limiting example, the second centerline length (Cl**2**) is greater than or equal to 10% and less than or equal to 100% of the first centerline length (Cl**1**). The extension distal end **166** axially coincides with or is axially displaced from at least one main body distal end of the set of main body distal ends **164**, with respect to the centerline (Cl).

It is contemplated that the selection of the second centerline length (Cl**2**) is used for manufacture and assembly purposes. Specifically, the shorter the second centerline length (Cl**2**), the easier it is to insert the extension **126** into the channel **122**. Conversely, a longer second centerline length (Cl**2**) can cause it to be more difficult to insert the extension **126** into the channel **122**. However, the shorter the second centerline length (Cl**2**), the smaller a mating area is between the cover structure **104** and the composite structure **102**. Conversely, the longer the second centerline length (Cl**2**), the larger the mating area between the between the cover structure **104** and the composite structure **102** as the extension **126** is longer. As used herein, a "mating area" is defined as an available surface area between a first structure (e.g., the cover structure **104**) and a second structure (e.g., the composite structure **102**) that can be used to couple the two structures together. For example, when using an adhesive to couple the composite structure **102** and the cover structure **104**, the available total mating area is a total surface area where the cover structure **104** directly contacts the composite structure **102**. A larger mating area means a stronger bond between the cover structure **104** and the composite structure **102**. The range described above ($0.10Cl1 \leq Cl2 \leq Cl1$) has been selected to ensure an adequate balance between the ease of manufacture and the mating area.

FIG. **4** is a schematic cross-sectional view of an engine component **200** suitable for use with the engine component **100** of FIG. **2**. The engine component **200** is similar to the engine component **100**; therefore, like parts will be identified with like numerals increased to the **200** series with it being understood that the description of the engine component **100** applies to the engine component **200** unless noted otherwise.

The engine component **200** includes a composite structure **202** and a cover structure **204**. The engine component **200** includes a centerline (Cl). The composite structure **202** includes a composite structure outer wall **208** and a composite structure edge **268**. The composite structure edge **268** can be any suitable edge of the composite structure **202**. As a non-limiting example, the composite structure edge **268** can be, but is not limited to, a composite structure tip (e.g., the composite structure tip **112** of FIG. **2**), a composite structure root (e.g., the composite structure root **110** of FIG. **2**), a composite structure leading edge (e.g., the composite structure leading edge **114** of FIG. **2**), a composite structure trailing edge (e.g., the composite structure trailing edge **116** of FIG. **2**), or the like. A channel **222** is formed along the composite structure edge **268**. The composite structure **202** is any suitable composite structure such as, but not limited to, an airfoil portion (e.g., the airfoil portion **106** of FIG. **2**), a fan casing (e.g., the fan casing **40** of FIG. **1**), a shroud, or the like. The cover structure **204** includes a main body **224** and an extension **226**. The extension **226** meets the main body **224** at a transition **230** illustrated in phantom lines. The cover structure **204** includes a cover structure edge **262**, a set of main body distal ends **264**, and an extension distal end **266**. The cover structure **204** and the composite structure **202** meet at a joint **228**.

The engine component **200** is similar to the engine component **100** in that the cover structure **204** is coupled to the composite structure **202**. The cover structure **204** is provided along the composite structure edge **268** and overlies at least a portion of the composite structure outer wall **208**. The engine component **200**, however, further includes a set of alignment channels **232** and a set of aligners **234**. Each aligner of the set of aligners **234** are sized to fit within a respective aligner channel of the set of alignment channels **232**, as illustrated. The set of aligners **234** and the set of alignment channels **232** are used to align, or otherwise couple the cover structure **204** to the composite structure **202** in a desired fashion or location. The set of aligners **234** and the set of alignment channels **232** are further used as locks. Put another way, once the set of aligners **234** are provided within the set of alignment channels **232**, the cover structure **204** is locked to or otherwise coupled to the composite structure **202**. The extension **226**, the set of aligners **234**, and the set of alignment channels **232** collectively couple the cover structure **204** to the composite structure **202**.

The set of aligners **234** are provided on one of either the cover structure **204** or the composite structure **202**, while the set of alignment channels **232** are provided on an other of the cover structure **204** or the composite structure **202**. As a non-limiting example, the set of aligners **234** are provided along the main body **224** and the set of alignment channels **232** are provided along the composite structure outer wall **208**. It will be appreciated, however, that the cover structure **204** and the composite structure **202** can each include both one or more respective aligners of the set of aligners **234** and one or more respective alignment channels of the set of alignment channels **232**.

Each aligner of the set of aligners **234** includes a respective cross-sectional area. The respective cross-sectional area of each aligner of the set of aligners **234** is any suitable shape such as, but not limited to, rectangular, circular, ovular, triangular, barbed, or the like.

FIG. **5** is a schematic cross-sectional view of an engine component **300** suitable for use with the engine component **100** of FIG. **2**. The engine component **300** is similar to the engine component **100**, **200** (FIG. **4**); therefore, like parts will be identified with like numerals increased to the **300** series with it being understood that the description of the engine component **100**, **200** applies to the engine component **300** unless noted otherwise.

The engine component **300** includes a composite structure **302** and a cover structure **304**. The engine component **300** includes a centerline (Cl). The composite structure **302** includes a composite structure outer wall **308** and a composite structure edge **368**. The composite structure edge **368** can be any suitable edge of the composite structure **302**. As a non-limiting example, the composite structure edge **368** can be, but is not limited to, a composite structure tip (e.g., the composite structure tip **112** of FIG. **2**), a composite structure root (e.g., the composite structure root **110** of FIG. **2**), a composite structure leading edge (e.g., the composite structure leading edge **114** of FIG. **2**), a composite structure trailing edge (e.g., the composite structure trailing edge **116** of FIG. **2**), or the like. A channel **322** is formed along the composite structure edge **368**. The composite structure **302** is any suitable composite structure such as, but not limited to, an airfoil portion (e.g., the airfoil portion **106** of FIG. **2**), a fan casing (e.g., the fan casing **40** of FIG. **1**), a shroud, or the like. The cover structure **304** includes a main body **324** and an extension **326**. The extension **326** meets the main body **324** at a transition **330** illustrated in phantom lines. The cover structure **304** includes a cover structure edge **362**, a set of main body distal ends **364**, and an extension distal end **366**. The cover structure **304** and the composite structure **302** meet at a joint **328**.

The engine component **300** is similar to the engine component **100**, **200** in that the cover structure **304** is coupled to the composite structure **302**. The cover structure **304** is provided along the composite structure edge **368** and overlies at least a portion of the composite structure outer wall **308**. The extension **326**, however, includes a triangular cross-sectional area. The joint **328** is a butt joint as opposed to a scarf joint like the joint **128** (FIG. **3**). The joint **328** can be sized such that the main body **324** and the composite structure outer wall **308** form a continuous surface, as illustrated.

FIG. **6** is a schematic cross-sectional view of an engine component **400** suitable for use with the engine component **100** of FIG. **2** The engine component **400** is similar to the engine component **100**, **200** (FIG. **4**), **300** (FIG. **5**); therefore, like parts will be identified with like numerals increased to the **400** series with it being understood that the description of the engine component **100**, **200**, **300** applies to the engine component **400** unless noted otherwise.

The engine component **400** includes a composite structure **402** and a cover structure **404**. The engine component **400** includes a centerline (Cl). The composite structure **402** includes a composite structure outer wall **408** and a composite structure edge **468**. The composite structure edge **468** can be any suitable edge of the composite structure **402**. As a non-limiting example, the composite structure edge **468** can be, but is not limited to, a composite structure tip (e.g., the composite structure tip **112** of FIG. **2**), a composite structure root (e.g., the composite structure root **110** of FIG. **2**), a composite structure leading edge (e.g., the composite structure leading edge **114** of FIG. **2**), a composite structure trailing edge (e.g., the composite structure trailing edge **116** of FIG. **2**), or the like. A channel **422** is formed along the composite structure edge **468**. The composite structure **402** is any suitable composite structure such as, but not limited to, an airfoil portion (e.g., the airfoil portion **106** of FIG. **2**), a fan casing (e.g., the fan casing **40** of FIG. **1**), a shroud, or the like. The cover structure **404** includes a main body **424**

and an extension **426**. The extension **426** meets the main body **424** at a transition **430** illustrated in phantom lines. The cover structure **404** includes a cover structure edge **462**, a set of main body distal ends **464**, and an extension distal end **466**. The cover structure **404** and the composite structure **402** meet at a joint **428**.

The engine component **400** is similar to the engine component **100**, **200**, **300** in that the cover structure **404** is coupled to the composite structure **402**. The cover structure **404** is provided along the composite structure edge **468** and overlies at least a portion of the composite structure outer wall **408**. The extension **426**, however, includes a bifurcation such that the extension **426** includes two or more prongs **436** terminating at respective extension distal ends **466**. Each prong of the two or more prongs **436** has a respective cross-sectional area that is any suitable shape such as, but not limited to, triangular, rectangular, ovular, trapezoidal, barbed, or the like. The cross-sectional area of at least two prongs of the two or more prongs **436** can be the same. The cross-sectional of at least two prongs of the two or more prongs **436** can be different. The two or more prongs **436** can be symmetric about the centerline (Cl). The two or more prongs **436** can be asymmetric about the centerline (Cl). The two or more prongs **436** can include any number of a plurality of prongs. The joint **428**, as illustrated, is sized such that that the main body **424** is non-continuous with the composite structure outer wall **408**. Put another way, a step is formed between the composite structure outer wall **408** and the main body **424**. As such, the joint **428** is defined as a stepped joint. As a non-limiting example, an outer surface or outer wall of the cover structure is provided radially outward, with respect to the centerline (Cl), from the outer wall **408** at the main body distal end **464**.

FIG. **7** is a schematic cross-sectional view of an engine component **500** suitable for use with the engine component of FIG. **2**. The engine component **500** is similar to the engine component **100**, **200** (FIG. **4**), **300** (FIG. **5**), **400** (FIG. **6**); therefore, like parts will be identified with like numerals increased to the **500** series with it being understood that the description of the engine component **100**, **200**, **300**, **400** applies to the engine component **500** unless noted otherwise.

The engine component **500** includes a composite structure **502** and a cover structure **504**. The engine component **500** includes a centerline (Cl). The composite structure **502** includes a composite structure outer wall **508** and a composite structure edge **568**. The composite structure edge **568** can be any suitable edge of the composite structure **502**. As a non-limiting example, the composite structure edge **568** can be, but is not limited to, a composite structure tip (e.g., the composite structure tip **112** of FIG. **2**), a composite structure root (e.g., the composite structure root **110** of FIG. **2**), a composite structure leading edge (e.g., the composite structure leading edge **114** of FIG. **2**), a composite structure trailing edge (e.g., the composite structure trailing edge **116** of FIG. **2**), or the like. A channel **522** is formed along the composite structure edge **568**. The composite structure **502** is any suitable composite structure such as, but not limited to, an airfoil portion (e.g., the airfoil portion **106** of FIG. **2**), a fan casing (e.g., the fan casing **40** of FIG. **1**), a shroud, or the like. The cover structure **504** includes a main body **524** and an extension **526**. The extension **526** meets the main body **524** at a transition **530** illustrated in phantom lines. The cover structure **504** includes a cover structure edge **562**, a set of main body distal ends **564**, and an extension distal end **566**. The cover structure **504** and the composite structure **502** meet at a joint **528**.

The engine component **500** is similar to the engine component **100**, **200**, **300**, **400** in that the cover structure **504** is coupled to the composite structure **502**. The cover structure **504** is provided along the composite structure edge **568** and overlies at least a portion of the composite structure outer wall **508**. The extension **526**, however, includes a set of barbs **538** provided along the extension **526**. The set of barbs **538** extend into the composite structure **502**. It is contemplated that the set of barbs **538** are used to enhance bonding between the cover structure **504** and the composite structure **502**. The set of barbs **538** are used to anchor or otherwise secure the cover structure **504** within the channel **522**. The set of barbs **538** include any number of one or more barbs. The set of barbs **538** further increase the mating area between the cover structure **504** and the composite structure **502** without increasing the length (e.g., the second centerline length (Cl2) of FIG. **3**) of the extension **526**. The extension **526** and the set of barbs **538** can be symmetric about the centerline (Cl). The extension **526** and the set of barbs **538** can be asymmetric about the centerline (Cl).

With reference to FIGS. **2-7**, it will be appreciated that the cover structure **104**, **204**, **304**, **404**, **504** can include any aspect of or combinations of aspects of the cover structure **104**, **204**, **304**, **404**, **504**. As a non-limiting example, a cover structure can include an extension that has a varying cross-sectional area along the cover structure (e.g., in the spanwise direction (Sd) of FIG. **2**) such that the cover structure includes at least two of the rectangular cross-sectional area of the extension **126**, the set of alignment channels **232** of the engine component **200**, the set of aligners **234** of the engine component **200**, the triangular cross-sectional area of the extension **326**, the two or more prongs **436** of the extension **426**, the set of barbs **538** of the extension **526**, or any combination thereof.

FIG. **8** is a schematic cross-sectional view of an engine component **600** suitable for use with the engine component **100** of FIG. **2**. The engine component **600** is similar to the engine component **100**, **200** (FIG. **4**), **300** (FIG. **5**), **400** (FIG. **6**), **500** (FIG. **7**); therefore, like parts will be identified with like numerals increased to the **600** series with it being understood that the description of the engine component **100**, **200**, **300**, **400**, **500** applies to the engine component **600** unless noted otherwise.

The engine component **600** includes a composite structure **602** and a cover structure **604**. The composite structure **602** includes a composite structure outer wall **608** extending between a composite structure leading edge **614** and a composite structure trailing edge **616**. The composite structure **602** includes a channel **622**. The channel **622** can be formed along the composite structure trailing edge **616**. The cover structure **604** includes a main body **624** and an extension **626**. The cover structure **604** includes a cover structure edge **662**, a set of main body distal ends **664**, and an extension distal end **666**. The extension **626** is provided within the channel **622**.

The engine component **600** is similar to the engine component **100**, **200**, **300**, **400**, **500** in that the cover structure **604** is coupled to the composite structure **602**. The cover structure **604** is provided along the composite structure edge (e.g., the composite structure trailing edge **616**) and overlies at least a portion of the composite structure outer wall **608**. However, the cover structure **604**, as illustrated, is provided along the composite structure trailing edge **616** rather than the composite structure leading edge **614**.

The engine component **600**, however, is a casing for a turbine engine **682**. The turbine engine **682** has an engine

centerline **656**, a set of fan blades **640** (e.g., the set of fan blades **42** of FIG. **1**) and a set of fan vanes **642** (e.g., the set of airfoil guide vanes **82** of FIG. **1**) that are housed within a fan casing (e.g., the fan casing **40** of FIG. **1**). The engine component **600**, as described herein, is the fan casing. The set of fan blades **640** and the set of fan vanes **642** are similar in function to the set of fan blades **42** (FIG. **1**) and the set of airfoil guide vanes **82** (FIG. **1**). As a non-limiting example, the turbine engine **682** is a turbofan engine. The turbine engine **682** includes an engine casing **644**. The engine casing **644** is any suitable housing separate from the fan casing (e.g., the engine component **600**). As a non-limiting example, the engine casing **644** can be the engine casing **46** (FIG. **1**), a nacelle, or the like.

The cover structure **604** can extend circumferentially about an entirety of the engine centerline **656**. The cover structure **604** can extend circumferentially about less than an entirety of the engine centerline **656**. The cover structure **604** can be a single, unitary body. As a non-limiting example, the cover structure **604** can be formed as a continuous annulus that forms a circumferential ring around the engine centerline **656**. The cover structure **604** can be multiple, segmented bodies circumferentially spaced about the engine centerline **656**.

The cover structure **604** can operably couple the composite structure **602** to the engine casing **644**. As a non-limiting example, the cover structure **604** can be integrally formed with or coupled to the engine casing **644** through any suitable method such as, but not limited to, bonding, adhesion, fastening, or the like. As such, the cover structure **604** can define a coupling between the fan casing (e.g., engine component **600**) and the engine casing **644**.

It is contemplated that mounting the composite structure **602** directly to the engine casing **644** can cause damage to the composite structure **602**. As a non-limiting example, during operation of the turbine engine **682**, the engine component **600** can move axially, radially or circumferentially with respect to the engine centerline **656**. This movement can damage the composite structure **602** if the composite structure **602** is allowed to move freely against or otherwise grind against another structure (e.g., the engine casing **644**). The cover structure **604**, however is more resilient to damage due to the movement. As such, providing the cover structure **604** along an edge of the composite structure **602** that would otherwise come into contact with other portions of the turbine engine **682** protects the composite structure **602** from damage. Further, the mounting of the composite structure **602** to the engine casing **644** through the cover structure **604** effectively stabilizes the composite structure **602**, thus reducing the movement the engine component **600**.

It will be appreciated that the cover structure **604** is provided along any suitable edge of the composite structure **602** such as, but not limited to, the composite structure leading edge **614**, the composite structure trailing edge **616**, or any other suitable portion of the composite structure outer wall **608**. As a non-limiting example, the engine component **600** can include two cover structures **604**; one provided along the composite structure leading edge **614** and the other provide along the composite structure trailing edge **616**. A cover structure **604** provide along the composite structure leading edge **614** is especially advantageous along a leading edge of a fan casing to protect against incoming debris (e.g., a bird).

FIG. **9** is a schematic cross-sectional view of an engine component **700** suitable for use with the engine component **700** of FIG. **2**. The engine component **700** is similar to the engine component **100**, **200** (FIG. **4**), **300** (FIG. **5**), **400** (FIG. **6**), **500** (FIG. **7**), **600** (FIG. **8**); therefore, like parts will be identified with like numerals increased to the **700** series with it being understood that the description of the engine component **100**, **200**, **300**, **400**, **500**, **600** applies to the engine component **700** unless noted otherwise.

The engine component **700** includes a composite structure **702** and a cover structure **704**. The composite structure **702** includes a composite structure outer wall **708** extending between a composite structure leading edge **714** and a composite structure trailing edge **716**. The composite structure **702** includes a channel **722**. The channel **722** can be formed along the composite structure trailing edge **716**. The cover structure **704** includes a main body **724** and an extension **726**. The cover structure **704** includes a cover structure edge **762**, a set of main body distal ends **764**, and an extension distal end **766**. The extension **726** is provided within the channel **722**.

The engine component **700** is similar to the engine component **100**, **200**, **300**, **400**, **500**, **600** in that the cover structure **704** is coupled to the composite structure **702**. The cover structure **704** is provided along the composite structure edge (e.g., the composite structure trailing edge **716**) and overlies at least a portion of the composite structure outer wall **708**.

The engine component **700**, like the engine component **600**, is provided within a turbine engine **782** having an engine centerline **756**, as set of fan blades **740**, a set of fan vanes **742**, and an engine casing **744**. The engine component **700** is a fan casing housing the set of fan blades **740** and the set of fan vanes **742**. The cover structure **704** couples the composite structure **702** to the engine casing **744**. The cover structure **704**, however, is mechanically coupled to the composite structure **702** through use of a fastener **746** in conjunction with the use of the extension **726**. The use of the fastener **746** in conjunction with the extension **726** provides additional support between the coupling between the composite structure **702** and the cover structure **704**.

The fastener **746** can be formed as a bolt extending through a respective portion of the composite structure **702** and the cover structure **704**. The fastener **746** can be formed as a bolt extending through a respective portion of the extension **726**.

FIG. **10** is a schematic view of an engine component **800** suitable for use with the engine component **800** of FIG. **2**. The engine component **800** is similar to the engine component **100**, **200** (FIG. **4**), **300** (FIG. **5**), **400** (FIG. **6**), **500** (FIG. **7**), **600** (FIG. **8**), **700** (FIG. **9**); therefore, like parts will be identified with like numerals increased to the **800** series with it being understood that the description of the engine component **100**, **200**, **300**, **400**, **500**, **600**, **700** applies to the engine component **800** unless noted otherwise.

The engine component **800** includes a composite structure **802** and a cover structure **804**. The composite structure **802** includes a composite structure outer wall **808** extending between a composite structure leading edge **814** and a composite structure trailing edge **816**. The cover structure **804** includes a main body **824**. The engine component **800** is provided within a turbine engine **882** having an engine centerline **856**.

The engine component **800**, like the engine component **100**, is an airfoil assembly **870**. The airfoil assembly **870**, however, includes two adjacent airfoil portions **806** circumferentially spaced along a platform **858**, with respect to the engine centerline **856**. It will be appreciated, however, that the airfoil assembly **870** can include any number of two or more airfoil portions **806**. Each airfoil portion of the two

adjacent airfoil portions **806** includes an outer wall **872**. Each outer wall **872** extends between a root **874** and a tip **876**. Each outer wall **872** extends between a leading edge **878** and a trailing edge **880**. Each outer wall **872** defines a suction side **884** and a pressure side **886**.

The engine component **800** is similar to the engine component **100**, **200**, **300**, **400**, **500**, **600**, **700** in that the cover structure **804** is coupled to the composite structure **802**. The cover structure **804** is provided along a composite structure edge and overlies at least a portion of the composite structure outer wall **808**. The composite structure **802**, however, is a midspan shroud. The midspan shroud (e.g., the composite structure **802**) is provided between the root **874** and the tip **876** of the two adjacent airfoil portions **806**. The midspan shroud (e.g., the composite structure **802**) extends from the suction side **884** of one airfoil portion of the two adjacent airfoil portions **806** to the pressure side **886** of an adjacent airfoil portion of the two adjacent airfoil portions **806**. The midspan shroud (e.g., the composite structure **802**) extends non-continuously between the two adjacent airfoil portions **806** such that the midspan shroud includes opposing midspan distal ends **854**. The opposing midspan distal ends **854** interconnect respective portions of the composite structure leading edge **814** and the composite structure trailing edge **816**. It will be appreciated, however, that the midspan shroud (e.g., the composite structure **802**) can extend continuously between an entirety of a circumferential extent between the two adjacent airfoil portions **806**.

The cover structure **804**, as illustrated, includes two bodies provided between the two adjacent airfoil portions **806**; a first body **888** and a second body **890**. The first body **888** is provided over a first portion of the composite structure **802**. The second body **890** is provided over a second portion of the composite structure **802**. While the first body **888** and the second body **890** are illustrated as being separate, it will be appreciated that they can be integrally formed or otherwise formed as a unitary body. As a non-limiting example, a single body can extend between the opposing midspan distal ends **854**. As a non-limiting example, the midspan shroud (e.g., the composite structure **802**) can be continuously formed between the two adjacent airfoil portions **806** and the cover structure **804** can extend continuously, as a single body, along the midspan shroud (e.g., the composite structure **802**).

It will be appreciated that one or more airfoil portions of the two adjacent airfoil portions **806**, or any other airfoil portion, can define a respective portion of the composite structure **802** or otherwise be a separate composite structure. As such, one or more airfoil portions can include a construction similar to the airfoil portion **106** (FIG. **2**) such that the cover structure **804**, or a separate cover structure **804** can be coupled to any respective edge of any airfoil portion in conjunction with the cover structure **804** provided along the composite structure **802** defining the midspan shroud.

FIG. **11** is a schematic cross-sectional view of the engine component **800** as seen from sectional line XI-XI of FIG. **10**. The cover structure **804** includes an extension **826** and a centerline (Cl). The extension **826** extends from the main body **824** at a transition **830** shown in phantom lines. The extension **826** includes any suitable cross-sectional area. The composite structure includes a channel **822**. The channel **822** and the extension **826** are sized such that that extension **826** fits within the channel **822**. The cover structure **804** and the composite structure **802** meet at a joint **828**.

FIG. **12** is a schematic cross-sectional view of the engine component **800** as seen from sectional line XII-XII of FIG. **10**. The first body **888** and the second body **890** meet at an interface **860**. While illustrated as the first body **888** and the second body **890**, it will be appreciated that the cover structure **804** can include a single body interconnecting the opposing midspan distal ends **854**.

The separation of the midspan shroud (e.g., the composite structure **802**) and the cover structure **804** between the first body **888** and the second body **890** allows for the engine component **800** to move during operation. This movement of the engine component **800** ensures that stresses due to the engine component **800** being overly rigid if it were not able to move do not occur.

The movement of the engine component **800**, however, can cause damage to the engine component **800** if two or more composite sections of the composite structure **802** touch one another and move in opposing directions. As a non-limiting example, if the opposing midspan distal ends **854** were to come into direct contact with each other, grinding would occur between the opposing midspan distal ends **854** and thus damage the opposing midspan distal ends **854**. It is contemplated that certain materials (e.g., metallic or plastic materials) are more resistant to grinding than composite materials. As such, the use of the cover structure **804** ensures that the grinding does not damage the engine component **800**.

Benefits of the present disclosure include a cover structure having a stronger bond with a respective portion of the engine component that it is coupled to when compared to a conventional engine component having a conventional cover structure. For example, the conventional cover structure is coupled to a respective portion of the conventional engine component through conventional methods such as welding, adhesion, bonding, friction, fastening, or the like.

When relying on fasteners or other external components to couple the conventional cover structure to a remainder of the conventional engine component require additional components to be added to the conventional engine component; thus, increasing the complexity, size, weight and manufacturing burden of the conventional engine component. The increase of the weight of the conventional engine component ultimately reduces the efficiency of the turbine engine. The cover structure, as described herein, uses the extension to effectively couple the cover structure to the composite structure, thus eliminating the need to have complex fastening systems to couple the two together; thus, increasing the overall efficiency of the turbine engine. In some instances, however, a simple fastener (e.g., the fastener **746** of FIG. **9**) can be used to supply additional support and stability between the composite structure and the cover structure. In some instances, the set of aligners and the set of alignment channels are used to lock, align and couple the cover structure to the composite structure in conjunction with the extension of the cover structure.

When relying on welding, adhesion, friction, or bonding, a mating area determines the strength of the coupling. The cover structure, as described herein, supports a larger mating area than the conventional cover structure as the cover structure includes the extension, whereas the conventional cover structure does not include the extension. As such, the cover structure has a stronger bond to the composite structure when compared to the conventional cover structure.

The stronger bond between the cover structure and the composite structure further ensures that the engine component has a better resiliency to forces (e.g., operational forces, external forces, etc.) when compared to the conventional engine component. When a force is applied to the conventional engine component, the cover structure can become dislodged, get damaged, or otherwise not absorb the force as

intended if the conventional cover structure is not adequately coupled to the respective portion of the conventional engine component. Ensuring adequate coupling can be achieved through use of the fasteners, however, as described previously this increases the complexity, weight and manufacturing burden of the conventional engine component. When using other coupling methods (e.g., welding, adhesion, friction, bonding, or the like), the ability for the cover structure to withstand higher forces is dependent on well the cover structure is mated to the respective portion of the engine component. As described previously, the cover structure has a larger mating area than the conventional cover structure. As such, the cover structure, as described herein, has a higher resilience to forces when welding, adhesion, friction, or bonding is used as the coupling method.

To the extent not already described, the different features and structures of the various embodiments can be used in combination, or in substitution with each other as desired. All combinations or permutations of features described herein are covered by this disclosure.

This written description uses examples to describe aspects of the disclosure described herein, including the best mode, and also to enable any person skilled in the art to practice aspects of the disclosure, including making and using any devices or systems and performing any incorporated methods. The patentable scope of aspects of the disclosure is defined by the claims, and may include other examples that occur to those skilled in the art. Such other examples are intended to be within the scope of the claims if they have structural elements that do not differ from the literal language of the claims, or if they include equivalent structural elements with insubstantial differences from the literal languages of the claims.

Further aspects are provided by the subject matter of the following clauses:

An engine component for a turbine engine, the engine component comprising a composite structure having a composite structure outer wall, a composite structure edge, and a channel provided along the composite structure edge, and a cover structure encasing at least a portion of the composite structure outer wall, the cover structure including a main body and an extension, the main body extending along the at least a portion of the composite structure outer wall of the composite structure, the extension received within the channel.

The engine component of any preceding clause, wherein the cover structure includes a non-constant cross-sectional area along the composite structure edge when viewed along a plane that is locally perpendicular to the composite structure edge and intersecting the cover structure.

The engine component of any preceding clause, wherein the cover structure extends axially along an entirety of the composite structure edge.

The engine component of any preceding clause, wherein the composite structure includes an airfoil portion having an outer wall defining the composite structure outer wall.

The engine component of any preceding clause, wherein the outer wall extends between a composite structure root and a composite structure tip, and between a composite structure leading edge and a composite structure trailing edge, with the composite structure edge being at least one of the composite structure tip, the composite structure leading edge, or the composite structure trailing edge.

The engine component of any preceding clause, wherein composite structure edge is the composite structure leading edge.

The engine component of any preceding clause, wherein the engine component is an airfoil assembly having an airfoil portion extending between a root and a tip, and a midspan shroud extending from the airfoil assembly, the midspan shroud being the composite structure.

The engine component of any preceding clause, wherein the composite structure overlies at least a portion of a composite structure leading edge.

The engine component of any preceding clause, wherein the composite structure outer wall extends between a composite structure leading edge and a composite structure trailing edge, the midspan shroud includes a midspan distal end interconnecting the composite structure trailing edge and the composite structure leading edge, with the cover structure overlying at least a portion of the midspan distal end.

The engine component of any preceding clause, wherein the turbine engine has an engine centerline, the airfoil assembly includes two adjacent airfoil portions circumferentially spaced with respect to the engine centerline, and the midspan shroud extends non-continuously between the composite structure to define circumferentially opposing midspan distal ends, and the cover structure is provided along the opposing midspan distal ends.

The engine component of any preceding clause, wherein the turbine engine comprises a fan section, and the composite structure is a fan casing of the fan section.

The engine component of any preceding clause, wherein the cover structure is provided along a composite structure trailing edge.

The engine component of any preceding clause, wherein the turbine engine includes an engine casing, and wherein the cover structure operably couples the fan casing to the engine casing.

The engine component of any preceding clause, wherein the composite structure comprises an alignment channel provided along the composite structure outer wall, and the cover structure comprises an aligner provided along the main body, the aligner being received within the alignment channel.

The engine component of any preceding clause, wherein, the composite structure includes a centerline extending from the composite structure edge, the main body extends a first centerline length axially with respect to the centerline, and the extension extends a second centerline length axially with respect to the centerline, the second centerline length being greater than or equal to 10% and less than or equal to 100% of the first centerline length.

The engine component of any preceding clause, wherein the extension includes a set of barbs extending into the composite structure.

The engine component of any preceding clause, wherein the extension includes a triangular shape when viewed along a plane locally perpendicular to the composite structure edge and intersecting the extension.

The engine component of any preceding clause, wherein at least a portion of the extension is bifurcated.

The engine component of any preceding clause, wherein the extension includes a rectangular shape when viewed along a plane locally perpendicular to the composite structure edge and intersecting the extension.

The engine component of any preceding clause, wherein the cover structure includes at least one of a metallic material or a plastic material.

The engine component of any preceding clause, wherein the cover structure includes at least one of titanium, aluminum, or polyurethane.

The engine component of any preceding clause, wherein the composite structure includes a composite material including at least one of a polymer matrix composite, a ceramic matrix composite, a metal matrix composite, carbon fiber, polymeric resin, a thermoplastic, a bismaleimide, a polyimide, an epoxy resin, a glass fiber, or a silicon matrix.

The engine component of any preceding clause, further comprising a fastener operatively coupling the cover structure to the composite structure.

The engine component of any preceding clause, wherein the fastener extends through a respective portion of the composite structure and the cover structure.

The engine component of any preceding clause, wherein the fastener extends through a respective portion of the extension.

The engine component of any preceding clause, wherein the cover structure extends continuously from the composite structure outer wall when the cover structure is coupled to the composite structure.

The engine component of any preceding clause, wherein an outer surface of the cover structure is flush against the outer wall with respect to the outer wall at a main body distal end.

The engine component of any preceding clause, wherein an outer surface of the cover structure is recessed with respect to the outer wall at a main body distal end.

The engine component of any preceding clause, wherein the outer surface of the cover structure is provided radially outward with respect to the outer wall at a main body distal end to form a stepped joint.

The engine component of any preceding clause, wherein the cover structure is pre-cured or co-molded with the composite structure.

The engine component of any preceding clause, wherein a joint is formed between the cover structure and the composite structure, the joint being at least one of a butt joint, a lap joint, a scarf joint or a stepped joint.

A turbine engine comprising an engine core having a compressor section, a combustion section, and a turbine section in serial flow arrangement, the engine core defining a rotor and a stator, an engine casing encasing at least a portion of the engine core, a fan section coupled to the rotor, the fan section including a fan casing, the fan casing including a composite structure having an outer wall, a composite structure edge, and a channel provided along the composite structure edge, and a cover structure encasing at least a portion of the outer wall, the cover structure coupling the fan casing to the engine casing.

The turbine engine of any preceding clause, wherein the cover structure includes a non-constant cross-sectional area along the composite structure edge when viewed along a plane that is locally perpendicular to the composite structure edge and intersecting the cover structure.

The turbine engine of any preceding clause, wherein the cover structure extends axially along an entirety of the composite structure edge.

The turbine engine of any preceding clause, wherein the composite structure includes an airfoil portion having an outer wall defining the composite structure outer wall.

The turbine engine of any preceding clause, wherein the outer wall extends between a composite structure root and a composite structure tip, and between a composite structure leading edge and a composite structure trailing edge, with the composite structure edge being at least one of the composite structure tip, the composite structure leading edge, or the composite structure trailing edge.

The turbine engine of any preceding clause, wherein composite structure edge is the composite structure leading edge.

The turbine engine of any preceding clause, wherein the engine component is an airfoil assembly having an airfoil portion extending between a root and a tip, and a midspan shroud extending from the airfoil assembly, the midspan shroud being the composite structure.

The turbine engine of any preceding clause, wherein the composite structure overlies at least a portion of a composite structure leading edge.

The turbine engine of any preceding clause, wherein the composite structure outer wall extends between a composite structure leading edge and a composite structure trailing edge, the midspan shroud includes a midspan distal end interconnecting the composite structure trailing edge and the composite structure leading edge, with the cover structure overlying at least a portion of the midspan distal end.

The turbine engine of any preceding clause, wherein the turbine engine has an engine centerline, the airfoil assembly includes two adjacent airfoil portions circumferentially spaced with respect to the engine centerline, and the midspan shroud extends non-continuously between the composite structure to define circumferentially opposing midspan distal ends, and the cover structure is provided along the opposing midspan distal ends.

The turbine engine of any preceding clause, wherein the turbine engine comprises a fan section, and the composite structure is a fan casing of the fan section.

The turbine engine of any preceding clause, wherein the cover structure is provided along a composite structure trailing edge.

The turbine engine of any preceding clause, wherein the turbine engine includes an engine casing, and wherein the cover structure operably couples the fan casing to the engine casing.

The turbine engine of any preceding clause, wherein the composite structure comprises an alignment channel provided along the composite structure outer wall, and the cover structure comprises an aligner provided along the main body, the aligner being received within the alignment channel.

The turbine engine of any preceding clause, wherein, the composite structure includes a centerline extending from the composite structure edge, the main body extends a first centerline length axially with respect to the centerline, and the extension extends a second centerline length axially with respect to the centerline, the second centerline length being greater than or equal to 10% and less than or equal to 100% of the first centerline length.

The turbine engine of any preceding clause, wherein the extension includes a set of barbs extending into the composite structure.

The turbine engine of any preceding clause, wherein the extension includes a triangular shape when viewed along a plane locally perpendicular to the composite structure edge and intersecting the extension.

The turbine engine of any preceding clause, wherein at least a portion of the extension is bifurcated.

The turbine engine of any preceding clause, wherein the extension includes a rectangular shape when viewed along a plane locally perpendicular to the composite structure edge and intersecting the extension.

The turbine engine of any preceding clause, wherein the cover structure includes at least one of a metallic material or a plastic material.

The turbine engine of any preceding clause, wherein the cover structure includes at least one of titanium, aluminum, or polyurethane.

The turbine engine of any preceding clause, wherein the composite structure includes a composite material including at least one of a polymer matrix composite, a ceramic matrix composite, a metal matrix composite, carbon fiber, polymeric resin, a thermoplastic, a bismaleimide, a polyimide, an epoxy resin, a glass fiber, or a silicon matrix.

The turbine engine of any preceding clause, wherein the engine component further comprises a fastener operatively coupling the cover structure to the composite structure.

The turbine engine of any preceding clause, wherein the fastener extends through a respective portion of the composite structure and the cover structure.

The turbine engine of any preceding clause, wherein the fastener extends through a respective portion of the extension.

The turbine engine of any preceding clause, wherein the cover structure extends continuously from the composite structure outer wall when the cover structure is coupled to the composite structure.

The turbine engine of any preceding clause, wherein an outer surface of the cover structure is flush against the outer wall with respect to the outer wall at a main body distal end.

The turbine engine of any preceding clause, wherein an outer surface of the cover structure is recessed with respect to the outer wall at a main body distal end.

The turbine engine of any preceding clause, wherein the outer surface of the cover structure is provided radially outward with respect to the outer wall at a main body distal end to form a stepped joint.

The turbine engine of any preceding clause, wherein the cover structure is pre-cured or co-molded with the composite structure.

The turbine engine of any preceding clause, wherein a joint is formed between the cover structure and the composite structure, the joint being at least one of a butt joint, a lap joint, a scarf joint or a stepped joint.

What is claimed is:

1. An engine component for a turbine engine, the engine component comprising:

a composite structure having a composite structure outer wall, a composite structure edge, and a channel provided along the composite structure edge, the composite structure having a centerline extending from the composite structure edge; and

a cover structure encasing at least a portion of the composite structure outer wall, the cover structure including a main body and an extension, the main body extending along at least a portion of the composite structure outer wall that is axially spaced aft of the composite structure edge, with respect to the centerline, the extension received within the channel.

2. The engine component of claim **1**, wherein:

the composite structure includes an airfoil portion having an outer wall defining the composite structure outer wall; and

the composite structure outer wall extends between a composite structure root and a composite structure tip, and between a composite structure leading edge and a composite structure trailing edge, with the composite structure edge being at least one of the composite structure tip, the composite structure leading edge, or the composite structure trailing edge.

3. The engine component of claim **1**, wherein the engine component is an airfoil assembly having an airfoil portion extending between a root and a tip, and a midspan shroud extending from the airfoil assembly, the midspan shroud being the composite structure.

4. The engine component of claim **3**, wherein the composite structure outer wall extends between a composite structure leading edge and a composite structure trailing edge, the midspan shroud includes a midspan distal end interconnecting the composite structure trailing edge and the composite structure leading edge, with the cover structure overlying at least a portion of the midspan distal end.

5. The engine component of claim **3**, wherein:

the turbine engine has an engine centerline;

the airfoil assembly includes two adjacent airfoil portions circumferentially spaced with respect to the engine centerline;

the midspan shroud extends non-continuously between the two adjacent airfoil portions to define circumferentially opposing midspan distal ends; and

the cover structure is provided along the opposing midspan distal ends.

6. The engine component of claim **1**, wherein the turbine engine comprises a fan section, and the composite structure is a fan casing of the fan section.

7. The engine component of claim **6**, wherein the cover structure is provided along a composite structure trailing edge.

8. The engine component of claim **7**, wherein the turbine engine includes an engine casing, and wherein the cover structure couples the fan casing to the engine casing.

9. The engine component of claim **1**, wherein the composite structure comprises an alignment channel provided along the composite structure outer wall, and the cover structure comprises an aligner provided along the main body, the aligner being received within the alignment channel.

10. The engine component of claim **1**, wherein:

the main body extends a first centerline length axially with respect to the centerline; and

the extension extends a second centerline length axially with respect to the centerline, the second centerline length being greater than or equal to 10% and less than or equal to 100% of the first centerline length.

11. The engine component of claim **1**, wherein the extension includes a set of barbs extending into the composite structure.

12. The engine component of claim **1**, wherein the extension includes a triangular shape when viewed along a plane locally perpendicular to the composite structure edge and intersecting the extension.

13. The engine component of claim **1**, wherein at least a portion of the extension is bifurcated.

14. The engine component of claim **1**, wherein the extension includes a rectangular shape when viewed along a plane locally perpendicular to the composite structure edge and intersecting the extension.

15. The engine component of claim **1**, wherein the cover structure includes at least one of a metallic material or a plastic material.

16. The engine component of claim **1**, wherein the main body and the extension are integrally formed.

17. The engine component of claim **1**, wherein the extension extends continuously with respect to the composite structure edge a distance that is greater than or equal to 75% and less than or equal to 100% of a total extent of the composite structure edge.

18. An engine component for a turbine engine, the engine component comprising:

a composite structure having a composite structure outer wall, a composite structure edge, and a channel provided along the composite structure edge, the composite structure having a centerline extending from the composite structure edge; and

a cover structure encasing at least a portion of the composite structure outer wall, the cover structure including a main body and an extension, the main body extending along at least a portion of the composite structure outer wall, the extension received within the channel;

wherein the channel extends into the composite structure in a first direction, with respect to the centerline; and

wherein the extension has a cross-sectional area when viewed along a plane extending along the centerline and intersecting the cover structure, the cross-sectional area of the extension being non-constant in a second direction, transverse the first direction, within the channel.

19. The engine component of claim **18**, wherein the engine component is an airfoil, the first direction is a chordwise direction of the airfoil, and the second direction is a spanwise direction of the airfoil.

20. An engine component for a turbine engine, the engine component comprising:

a composite structure having a composite structure outer wall, a composite structure edge, and a channel provided along the composite structure edge, the composite structure having a centerline extending from the composite structure edge; and

a cover structure encasing at least a portion of the composite structure outer wall, the cover structure including a main body and an extension, the main body extending along at least a portion of the composite structure outer wall, the extension received within the channel;

wherein:

the main body terminates at a main body distal end that is spaced a first centerline length axially aft from the composite structure edge, with respect to the centerline; and

the extension terminates at an extension distal end that is spaced a second centerline length axially aft from the composite structure edge, with respect to the centerline, the second centerline length being less than or equal to the first centerline length.

* * * * *