US012414854B2

(12) **United States Patent**
Straubinger et al.

(10) **Patent No.: US 12,414,854 B2**
(45) **Date of Patent: *Sep. 16, 2025**

(54) **CATHETER SYSTEM FOR INTRODUCING AN EXPANDABLE STENT INTO THE BODY OF A PATIENT**

(71) Applicant: **JenaValve Technology, Inc.**, Irvine, CA (US)

(72) Inventors: **Helmut Straubinger**, Aschheim (DE); **Arnulf Mayer**, Markt Schwaben (DE); **Johannes Jung**, Pforzheim-Huchenfeld (DE)

(73) Assignee: **JenaValve Technology, Inc.**, Irvine, CA (US)

(*) Notice: Subject to any disclaimer, the term of this patent is extended or adjusted under 35 U.S.C. 154(b) by 443 days.

This patent is subject to a terminal disclaimer.

(21) Appl. No.: **17/451,062**

(22) Filed: **Oct. 15, 2021**

(65) **Prior Publication Data**

US 2022/0031455 A1 Feb. 3, 2022

Related U.S. Application Data

(63) Continuation of application No. 16/390,120, filed on Apr. 22, 2019, now Pat. No. 11,147,669, which is a (Continued)

(30) **Foreign Application Priority Data**

May 20, 2010 (EP) 10163478

(51) **Int. Cl.**
A61F 2/24 (2006.01)
A61F 2/95 (2013.01)
(Continued)

(52) **U.S. Cl.**
CPC ***A61F 2/2436*** (2013.01); ***A61F 2/2418*** (2013.01); ***A61F 2/2427*** (2013.01);
(Continued)

(58) **Field of Classification Search**
CPC A61F 2/2418; A61F 2/2427; A61F 2/2433; A61F 2/2436; A61F 2/9517; A61F 2/966;
(Continued)

(56) **References Cited**

U.S. PATENT DOCUMENTS

15,192 A 6/1856 Peale
388,776 A 8/1888 Hall
(Continued)

FOREIGN PATENT DOCUMENTS

AU 757647 B2 2/2003
AU 776895 B2 9/2004
(Continued)

OTHER PUBLICATIONS

US 6,331,185 B1, 12/2001, Gambale et al. (withdrawn)
(Continued)

Primary Examiner — Mohamed G Gabr
(74) *Attorney, Agent, or Firm* — Greenberg Traurig, LLP; Christopher C. Bolten; Robert D. Ward

(57) **ABSTRACT**

This disclosure relates to a catheter system for introducing a heart valve stent into the body of a patient. The catheter system includes a catheter tip having a seat portion for accommodating the stent in its collapsed state and a stent holder for releasably fixing the stent, wherein the seat portion is constituted by a first sleeve and a second sleeve, said sleeves being moveable relative to each other and relative to the stent holder, and a catheter shaft for connecting the catheter tip to a handle.

15 Claims, 13 Drawing Sheets

Related U.S. Application Data

continuation of application No. 15/407,560, filed on Jan. 17, 2017, now Pat. No. 10,307,251, which is a continuation of application No. 13/698,910, filed as application No. PCT/EP2011/002524 on May 20, 2011, now Pat. No. 9,597,182, which is a continuation-in-part of application No. 12/801,090, filed on May 20, 2010, now Pat. No. 10,856,978.

(51) **Int. Cl.**
A61F 2/966 (2013.01)
A61M 25/09 (2006.01)

(52) **U.S. Cl.**
CPC ***A61F 2/2433*** (2013.01); ***A61F 2/966*** (2013.01); *A61F 2002/9505* (2013.01); *A61F 2/9517* (2020.05); *A61F 2002/9665* (2013.01); *A61F 2210/0014* (2013.01); *A61M 2025/09141* (2013.01)

(58) **Field of Classification Search**
CPC A61F 2002/9505; A61F 2002/9665; A61F 2210/0014; A61M 2025/09141
See application file for complete search history.

(56) **References Cited**

U.S. PATENT DOCUMENTS

944,214 A 12/1909 Rydquist
2,121,182 A 6/1938 Benjamin
2,669,896 A 2/1954 Clough
2,682,057 A 6/1954 Lord
2,701,559 A 2/1955 Cooper
2,832,078 A 4/1958 Williams
3,029,819 A 4/1962 Edward et al.
3,099,016 A 7/1963 Lowell et al.
3,113,586 A 12/1963 Edmark, Jr. et al.
3,130,418 A 4/1964 Head et al.
3,143,742 A 8/1964 Cromie
3,210,836 A 10/1965 Johanson et al.
3,221,006 A 11/1965 Moore et al.
3,334,629 A 8/1967 Cohn
3,365,728 A 1/1968 Lowell et al.
3,367,364 A 2/1968 Cruz, Jr. et al.
3,409,013 A 11/1968 Henry et al.
3,445,916 A 5/1969 Schulte et al.
3,540,431 A 11/1970 Mobin-Uddin et al.
3,548,417 A 12/1970 Kischer et al.
3,570,014 A 3/1971 Hancock et al.
3,574,865 A 4/1971 Hamaker
3,587,115 A 6/1971 Shiley et al.
3,592,184 A 7/1971 Watkins et al.
3,628,535 A 12/1971 Ostrowsky et al.
3,642,004 A 2/1972 Osthagen et al.
3,657,744 A 4/1972 Ersek
3,671,979 A 6/1972 Moulopoulos
3,714,671 A 2/1973 Edwards et al.
3,725,961 A 4/1973 Magovern et al.
3,755,823 A 9/1973 Hancock
3,795,246 A 3/1974 Sturgeon
3,839,741 A 10/1974 Haller
3,868,956 A 3/1975 Alfidi et al.
3,874,388 A 4/1975 King et al.
3,983,581 A 10/1976 Angell et al.
3,997,923 A 12/1976 Possis
4,035,849 A 7/1977 Angell et al.
4,056,854 A 11/1977 Boretos et al.
4,078,268 A 3/1978 Possis
4,084,268 A 4/1978 Ionescu et al.
4,106,126 A 8/1978 Traenkle
4,106,129 A 8/1978 Carpentier et al.
4,118,806 A 10/1978 Porier et al.
4,164,046 A 8/1979 Cooley
4,182,446 A 1/1980 Penny
4,191,218 A 3/1980 Clark et al.
4,214,587 A 7/1980 Sakura, Jr.
4,215,871 A 8/1980 Hirsch et al.
4,222,126 A 9/1980 Boretos et al.
4,233,690 A 11/1980 Akins
4,261,342 A 4/1981 Aranguren Duo
4,263,680 A 4/1981 Reul et al.
4,265,694 A 5/1981 Boretos et al.
4,291,420 A 9/1981 Reul
4,297,749 A 11/1981 Davis et al.
4,319,831 A 3/1982 Matsui et al.
RE30,912 E 4/1982 Hancock
4,323,358 A 4/1982 Lentz et al.
4,326,306 A 4/1982 Poler
4,339,831 A 7/1982 Johnson
4,343,048 A 8/1982 Ross et al.
4,345,340 A 8/1982 Rosen
4,350,492 A 9/1982 Wright et al.
4,373,216 A 2/1983 Klawitter
4,388,735 A 6/1983 Ionescu et al.
4,406,022 A 9/1983 Roy
4,423,809 A 1/1984 Mazzocco
4,425,908 A 1/1984 Simon
4,441,215 A 4/1984 Kaster
4,441,216 A 4/1984 Ionescu et al.
4,470,157 A 9/1984 Love
4,484,579 A 11/1984 Meno et al.
4,485,816 A 12/1984 Krumme
4,491,986 A 1/1985 Gabbay
4,501,030 A 2/1985 Lane
4,502,488 A 3/1985 Degironimo et al.
4,531,943 A 7/1985 Van Tassel et al.
4,535,483 A 8/1985 Klawitter et al.
4,546,499 A 10/1985 Possis et al.
4,562,597 A 1/1986 Possis et al.
4,574,803 A 3/1986 Storz
4,580,568 A 4/1986 Gianturco
4,592,340 A 6/1986 Boyles
4,602,911 A 7/1986 Ahmadi et al.
4,605,407 A 8/1986 Black et al.
4,610,688 A 9/1986 Silvestrini et al.
4,612,011 A 9/1986 Kautzky
4,617,932 A 10/1986 Kornberg
4,619,246 A 10/1986 Molgaard-Nielsen et al.
4,643,732 A 2/1987 Pietsch et al.
4,647,283 A 3/1987 Carpentier et al.
4,648,881 A 3/1987 Carpentier et al.
4,655,218 A 4/1987 Kulik et al.
4,655,771 A 4/1987 Wallsten
4,662,885 A 5/1987 DiPisa, Jr.
4,665,906 A 5/1987 Jervis
4,665,918 A 5/1987 Garza et al.
4,680,031 A 7/1987 Alonso
4,681,908 A 7/1987 Broderick et al.
4,687,483 A 8/1987 Fisher et al.
4,692,164 A 9/1987 Dzemeshkevich et al.
4,705,516 A 11/1987 Barone et al.
4,710,192 A 12/1987 Liotta et al.
4,733,665 A 3/1988 Palmaz
4,755,181 A 7/1988 Igoe
4,759,758 A 7/1988 Gabbay
4,769,029 A 9/1988 Patel
4,777,951 A 10/1988 Cribier et al.
4,787,899 A 11/1988 Lazarus
4,787,901 A 11/1988 Baykut
4,796,629 A 1/1989 Grayzel
4,797,901 A 1/1989 Goerne et al.
4,806,595 A 2/1989 Noishiki et al.
4,819,751 A 4/1989 Shimada et al.
4,829,990 A 5/1989 Thuroff et al.
4,834,755 A 5/1989 Silvestrini et al.
4,846,830 A 7/1989 Knoch et al.
4,851,001 A 7/1989 Taheri
4,856,516 A 8/1989 Hillstead
4,865,600 A 9/1989 Carpentier et al.
4,872,874 A 10/1989 Taheri
4,873,978 A 10/1989 Ginsburg
4,878,495 A 11/1989 Grayzel
4,878,906 A 11/1989 Lindemann et al.

(56) **References Cited**

U.S. PATENT DOCUMENTS

4,883,458 A 11/1989 Shiber
4,885,005 A 12/1989 Nashef et al.
4,909,252 A 3/1990 Goldberger
4,917,102 A 4/1990 Miller et al.
4,922,905 A 5/1990 Strecker
4,927,426 A 5/1990 Dretler
4,950,227 A 8/1990 Savin et al.
4,953,553 A 9/1990 Tremulis
4,954,126 A 9/1990 Wallsten
4,966,604 A 10/1990 Reiss
4,969,890 A 11/1990 Sugita et al.
4,979,939 A 12/1990 Shiber
4,986,830 A 1/1991 Owens et al.
4,994,077 A 2/1991 Dobben
5,002,556 A 3/1991 Ishida et al.
5,002,559 A 3/1991 Tower
5,002,566 A 3/1991 Carpentier et al.
5,007,896 A 4/1991 Shiber
5,026,366 A 6/1991 Leckrone
5,026,377 A 6/1991 Burton et al.
5,032,128 A 7/1991 Alonso
5,035,706 A 7/1991 Giantureo et al.
5,037,434 A 8/1991 Lane
5,047,041 A 9/1991 Samuels
5,053,008 A 10/1991 Bajaj
5,059,177 A 10/1991 Towne et al.
5,061,273 A 10/1991 Yock
5,061,277 A 10/1991 Carpentier et al.
5,064,435 A 11/1991 Porter
5,078,720 A 1/1992 Burton et al.
5,080,668 A 1/1992 Bolz et al.
5,085,635 A 2/1992 Cragg
5,089,015 A 2/1992 Ross
5,094,661 A 3/1992 Levy et al.
5,104,399 A 4/1992 Lazarus
5,104,407 A 4/1992 Lam et al.
5,108,425 A 4/1992 Hwang
5,122,154 A 6/1992 Rhodes
5,132,473 A 7/1992 Furutaka et al.
5,141,494 A 8/1992 Danforth et al.
5,143,987 A 9/1992 Hansel et al.
5,147,388 A 9/1992 Yamazaki
5,152,771 A 10/1992 Sabbaghian et al.
5,159,937 A 11/1992 Tremulis
5,161,547 A 11/1992 Tower
5,163,953 A 11/1992 Vince
5,163,955 A 11/1992 Love et al.
5,167,628 A 12/1992 Boyles
5,178,632 A 1/1993 Hanson
5,192,301 A 3/1993 Kamiya et al.
5,193,546 A 3/1993 Shaknovich
5,197,979 A 3/1993 Quintero et al.
5,201,757 A 4/1993 Heyn et al.
5,207,695 A 5/1993 Trout, III
5,209,741 A 5/1993 Spaeth
5,211,183 A 5/1993 Wilson
5,215,541 A 6/1993 Nashef et al.
5,217,481 A 6/1993 Barbara
5,217,483 A 6/1993 Tower
5,232,445 A 8/1993 Bonzel
5,234,447 A 8/1993 Kaster et al.
5,234,456 A 8/1993 Silvestrini
5,238,004 A 8/1993 Sahatjian et al.
5,258,008 A 11/1993 Wilk
5,258,023 A 11/1993 Reger
5,258,042 A 11/1993 Mehta
5,272,909 A 12/1993 Nguyen et al.
5,275,580 A 1/1994 Yamazaki
5,279,612 A 1/1994 Eberhardt
5,282,847 A 2/1994 Trescony et al.
5,287,861 A 2/1994 Wilk
5,295,958 A 3/1994 Shturman
5,327,774 A 7/1994 Nguyen et al.
5,330,486 A 7/1994 Wilk
5,330,500 A 7/1994 Song
5,332,402 A 7/1994 Teitelbaum
5,336,258 A 8/1994 Quintero et al.
5,342,348 A 8/1994 Kaplan
5,344,426 A 9/1994 Lau et al.
5,344,427 A 9/1994 Cottenceau et al.
5,344,442 A 9/1994 Deac
5,350,398 A 9/1994 Pavcnik et al.
5,350,399 A 9/1994 Erlebacher et al.
5,352,240 A 10/1994 Ross
5,354,330 A 10/1994 Hanson et al.
5,360,444 A 11/1994 Kusuhara
5,368,608 A 11/1994 Levy et al.
5,370,685 A 12/1994 Stevens
5,380,054 A 1/1995 Galvis
5,387,235 A 2/1995 Chuter
5,389,096 A 2/1995 Aita et al.
5,389,106 A 2/1995 Tower
5,397,351 A 3/1995 Pavcnik et al.
5,397,355 A 3/1995 Marin et al.
5,409,019 A 4/1995 Wilk
5,411,552 A 5/1995 Andersen et al.
5,415,633 A 5/1995 Lazarus et al.
5,425,739 A 6/1995 Jessen
5,425,762 A 6/1995 Muller
5,429,144 A 7/1995 Wilk
5,431,676 A 7/1995 Dubrul et al.
5,433,723 A 7/1995 Lindenberg et al.
5,443,446 A 8/1995 Shturman
5,443,449 A 8/1995 Buelna
5,443,477 A 8/1995 Marin et al.
5,443,495 A 8/1995 Buscemi et al.
5,443,499 A 8/1995 Schmitt
5,449,384 A 9/1995 Johnson
5,456,712 A 10/1995 Maginot
5,456,713 A 10/1995 Chuter
5,464,449 A 11/1995 Ryan et al.
5,469,868 A 11/1995 Reger
5,470,320 A 11/1995 Tiefenbrun et al.
5,489,294 A 2/1996 McVenes et al.
5,489,297 A 2/1996 Duran
5,489,298 A 2/1996 Love et al.
5,496,346 A 3/1996 Horzewski et al.
5,499,995 A 3/1996 Teirstein
5,500,014 A 3/1996 Quijano et al.
5,500,015 A 3/1996 Deac
5,507,767 A 4/1996 Maeda et al.
5,509,930 A 4/1996 Love
5,522,881 A 6/1996 Lentz
5,527,337 A 6/1996 Stack et al.
5,530,949 A 6/1996 Koda et al.
5,534,007 A 7/1996 St. Germain et al.
5,540,712 A 7/1996 Kleshinski et al.
5,545,133 A 8/1996 Burns et al.
5,545,209 A 8/1996 Roberts et al.
5,545,211 A 8/1996 An et al.
5,545,214 A 8/1996 Stevens
5,549,665 A 8/1996 Vesely et al.
5,549,666 A 8/1996 Hata et al.
5,554,119 A 9/1996 Harrison et al.
5,554,185 A 9/1996 Block et al.
5,569,274 A 10/1996 Rapacki et al.
5,571,167 A 11/1996 Maginot
5,571,174 A 11/1996 Love et al.
5,571,175 A 11/1996 Vanney et al.
5,571,215 A 11/1996 Sterman et al.
5,573,520 A 11/1996 Schwartz et al.
5,575,818 A 11/1996 Pinchuk
5,580,922 A 12/1996 Park et al.
5,591,185 A 1/1997 Kilmer et al.
5,595,571 A 1/1997 Jaffe et al.
5,607,465 A 3/1997 Camilli
5,609,626 A 3/1997 Quijano et al.
5,613,982 A 3/1997 Goldstein
5,618,299 A 4/1997 Khosravi et al.
5,626,553 A 5/1997 Frassica et al.
5,628,784 A 5/1997 Strecker
5,632,778 A 5/1997 Goldstein
5,634,942 A 6/1997 Chevillon et al.
5,643,278 A 7/1997 Wijay

(56) **References Cited**

U.S. PATENT DOCUMENTS

5,645,559 A 7/1997 Hachtman et al.
5,653,684 A 8/1997 Laptewicz et al.
5,653,745 A 8/1997 Trescony et al.
5,653,749 A 8/1997 Love et al.
5,655,548 A 8/1997 Nelson et al.
5,662,124 A 9/1997 Wilk
5,662,671 A 9/1997 Barbut et al.
5,662,703 A 9/1997 Yurek et al.
5,665,115 A 9/1997 Cragg
5,667,523 A 9/1997 Bynon et al.
5,674,277 A 10/1997 Freitag
5,674,298 A 10/1997 Levy et al.
5,679,112 A 10/1997 Levy et al.
5,681,345 A 10/1997 Euteneuer
5,682,906 A 11/1997 Sterman et al.
5,683,451 A 11/1997 Lenker et al.
5,690,644 A 11/1997 Yurek et al.
5,693,083 A 12/1997 Baker et al.
5,693,088 A 12/1997 Lazarus
5,693,310 A 12/1997 Gries et al.
5,695,498 A 12/1997 Tower
5,697,972 A 12/1997 Kim et al.
5,700,269 A 12/1997 Pinchuk et al.
5,702,368 A 12/1997 Stevens et al.
5,709,713 A 1/1998 Evans et al.
5,713,917 A 2/1998 Leonhardt et al.
5,713,950 A 2/1998 Cox
5,713,951 A 2/1998 Garrison et al.
5,713,953 A 2/1998 Vallana et al.
5,716,370 A 2/1998 Williamson, IV et al.
5,716,417 A 2/1998 Girard et al.
5,718,725 A 2/1998 Sterman et al.
5,720,391 A 2/1998 Dohm et al.
5,720,776 A 2/1998 Chuter et al.
5,725,549 A 3/1998 Lam
5,725,550 A 3/1998 Nadal
5,728,068 A 3/1998 Leone et al.
5,728,151 A 3/1998 Garrison et al.
5,733,267 A 3/1998 Del Toro
5,733,325 A 3/1998 Robinson et al.
5,735,842 A 4/1998 Krueger et al.
5,746,476 A 5/1998 Novak et al.
5,746,709 A 5/1998 Rom et al.
5,746,765 A 5/1998 Kleshinski et al.
5,746,775 A 5/1998 Levy et al.
5,749,890 A 5/1998 Shaknovich
5,749,921 A 5/1998 Lenker et al.
5,755,682 A 5/1998 Knudson et al.
5,755,777 A 5/1998 Chuter
5,755,783 A 5/1998 Stobie et al.
5,756,476 A 5/1998 Epstein et al.
5,758,663 A 6/1998 Wilk et al.
5,766,151 A 6/1998 Valley et al.
5,769,780 A 6/1998 Hata et al.
5,769,812 A 6/1998 Stevens et al.
5,769,882 A 6/1998 Fogarty et al.
5,769,887 A 6/1998 Brown et al.
5,772,609 A 6/1998 Nguyen et al.
5,776,188 A 7/1998 Shepherd et al.
5,782,809 A 7/1998 Umeno et al.
5,782,904 A 7/1998 White et al.
5,795,331 A 8/1998 Cragg et al.
5,797,946 A 8/1998 Chin
5,797,960 A 8/1998 Stevens et al.
5,799,661 A 9/1998 Boyd et al.
5,800,456 A 9/1998 Maeda et al.
5,800,508 A 9/1998 Goicoechea et al.
5,800,531 A 9/1998 Cosgrove et al.
5,807,327 A 9/1998 Green et al.
5,807,384 A 9/1998 Mueller
5,807,405 A 9/1998 Vanney et al.
5,810,836 A 9/1998 Hussein et al.
5,814,016 A 9/1998 Valley et al.
5,817,113 A 10/1998 Gifford, III et al.
5,817,126 A 10/1998 Imran
5,823,956 A 10/1998 Roth et al.
5,824,037 A 10/1998 Fogarty et al.
5,824,038 A 10/1998 Wall
5,824,041 A 10/1998 Lenker et al.
5,824,043 A 10/1998 Cottone, Jr.
5,824,053 A 10/1998 Khosravi et al.
5,824,055 A 10/1998 Spiridigliozzi et al.
5,824,056 A 10/1998 Rosenberg
5,824,061 A 10/1998 Quijano et al.
5,824,063 A 10/1998 Cox
5,824,064 A 10/1998 Taheri
5,824,071 A 10/1998 Nelson et al.
5,824,080 A 10/1998 Lamuraglia
5,829,447 A 11/1998 Stevens et al.
5,830,222 A 11/1998 Makower
5,836,869 A 11/1998 Kudo et al.
5,840,081 A 11/1998 Andersen et al.
5,841,382 A 11/1998 Walden et al.
5,843,158 A 12/1998 Lenker et al.
5,843,161 A 12/1998 Solovay
5,843,181 A 12/1998 Jaffe et al.
5,851,232 A 12/1998 Lois
5,853,419 A 12/1998 Imran
5,853,420 A 12/1998 Chevillon et al.
5,855,210 A 1/1999 Sterman et al.
5,855,597 A 1/1999 Jayaraman
5,855,600 A 1/1999 Alt
5,855,601 A 1/1999 Bessler et al.
5,855,602 A 1/1999 Angell
5,860,966 A 1/1999 Tower
5,860,996 A 1/1999 Urban et al.
5,861,024 A 1/1999 Rashidi
5,861,028 A 1/1999 Angell
5,865,723 A 2/1999 Love
5,868,783 A 2/1999 Tower
5,873,812 A 2/1999 Ciana et al.
5,873,906 A 2/1999 Lau et al.
5,876,373 A 3/1999 Giba et al.
5,876,419 A 3/1999 Carpenter et al.
5,876,434 A 3/1999 Flomenblit et al.
5,876,448 A 3/1999 Thompson et al.
5,878,751 A 3/1999 Hussein et al.
5,880,242 A 3/1999 Hu et al.
5,885,228 A 3/1999 Rosenman et al.
5,885,238 A 3/1999 Stevens et al.
5,885,259 A 3/1999 Berg
5,888,201 A 3/1999 Stinson et al.
5,891,160 A 4/1999 Williamson, IV et al.
5,891,191 A 4/1999 Stinson
5,895,399 A 4/1999 Barbut et al.
5,895,420 A 4/1999 Mirsch, II et al.
5,899,936 A 5/1999 Goldstein
5,906,619 A 5/1999 Olson et al.
5,907,893 A 6/1999 Zadno-Azizi et al.
5,908,028 A 6/1999 Wilk
5,908,029 A 6/1999 Knudson et al.
5,908,451 A 6/1999 Yeo
5,908,452 A 6/1999 Bokros et al.
5,910,144 A 6/1999 Hayashi
5,910,154 A 6/1999 Tsugita et al.
5,911,734 A 6/1999 Tsugita et al.
5,911,752 A 6/1999 Dustrude et al.
5,913,842 A 6/1999 Boyd et al.
5,916,193 A 6/1999 Stevens et al.
5,922,022 A 7/1999 Nash et al.
5,924,424 A 7/1999 Stevens et al.
5,925,012 A 7/1999 Murphy-Chutorian et al.
5,925,063 A 7/1999 Khosravi
5,928,281 A 7/1999 Huynh et al.
5,931,848 A 8/1999 Saadat
5,935,119 A 8/1999 Guy et al.
5,935,161 A 8/1999 Robinson et al.
5,935,163 A 8/1999 Gabbay
5,938,632 A 8/1999 Ellis
5,938,697 A 8/1999 Killion et al.
5,941,908 A 8/1999 Goldsteen et al.
5,944,019 A 8/1999 Knudson et al.
5,944,738 A 8/1999 Amplatz et al.
5,948,017 A 9/1999 Taheri

(56) **References Cited**

U.S. PATENT DOCUMENTS

5,954,764 A 9/1999 Parodi
5,954,766 A 9/1999 Zadno-Azizi et al.
5,957,949 A 9/1999 Leonhardt et al.
5,961,549 A 10/1999 Nguyen et al.
5,964,405 A 10/1999 Benary et al.
5,964,798 A 10/1999 Imran
5,968,064 A 10/1999 Selmon et al.
5,968,068 A 10/1999 Dehdashtian et al.
5,968,070 A 10/1999 Bley et al.
5,971,993 A 10/1999 Hussein et al.
5,975,949 A 11/1999 Holliday et al.
5,976,153 A 11/1999 Fischell et al.
5,976,155 A 11/1999 Foreman et al.
5,976,174 A 11/1999 Ruiz
5,976,178 A 11/1999 Goldsteen et al.
5,976,192 A 11/1999 McIntyre et al.
5,976,650 A 11/1999 Campbell et al.
5,979,455 A 11/1999 Maginot
5,980,455 A 11/1999 Daniel et al.
5,980,533 A 11/1999 Holman
5,980,548 A 11/1999 Evans et al.
5,984,956 A 11/1999 Tweden et al.
5,984,957 A 11/1999 Laptewicz, Jr. et al.
5,984,959 A 11/1999 Robertson et al.
5,984,964 A 11/1999 Roberts et al.
5,987,344 A 11/1999 West
5,989,276 A 11/1999 Houser et al.
5,989,287 A 11/1999 Yang et al.
5,993,469 A 11/1999 McKenzie et al.
5,993,481 A 11/1999 Marcade et al.
5,997,525 A 12/1999 March et al.
5,997,557 A 12/1999 Barbut et al.
5,997,563 A 12/1999 Kretzers
5,997,573 A 12/1999 Quijano et al.
5,999,678 A 12/1999 Murphy-Chutorian et al.
6,001,123 A 12/1999 Lau
6,001,126 A 12/1999 Nguyen-Thien-Nhon
6,004,261 A 12/1999 Sinofsky et al.
6,004,347 A 12/1999 McNamara et al.
6,004,348 A 12/1999 Banas et al.
6,007,543 A 12/1999 Ellis et al.
6,010,449 A 1/2000 Selmon et al.
6,010,522 A 1/2000 Barbut et al.
6,010,530 A 1/2000 Goicoechea
6,010,531 A 1/2000 Donlon et al.
6,012,457 A 1/2000 Lesh
6,013,854 A 1/2000 Moriuchi
6,015,431 A 1/2000 Thornton et al.
6,019,777 A 2/2000 MacKenzie
6,019,778 A 2/2000 Wilson et al.
6,022,370 A 2/2000 Tower
6,026,814 A 2/2000 LaFontaine et al.
6,027,476 A 2/2000 Sterman et al.
6,027,520 A 2/2000 Tsugita et al.
6,027,525 A 2/2000 Suh et al.
6,029,671 A 2/2000 Stevens et al.
6,029,672 A 2/2000 Vanney et al.
6,033,582 A 3/2000 Lee et al.
6,035,856 A 3/2000 LaFontaine et al.
6,036,677 A 3/2000 Javier, Jr. et al.
6,036,697 A 3/2000 DiCaprio
6,042,554 A 3/2000 Rosenman et al.
6,042,581 A 3/2000 Ryan et al.
6,042,589 A 3/2000 Marianne
6,042,598 A 3/2000 Tsugita et al.
6,042,607 A 3/2000 Williamson, IV et al.
6,045,565 A 4/2000 Ellis et al.
6,051,014 A 4/2000 Jang
6,051,104 A 4/2000 Oriaran et al.
6,053,924 A 4/2000 Hussein
6,053,942 A 4/2000 Eno et al.
6,056,743 A 5/2000 Ellis et al.
6,059,809 A 5/2000 Amor et al.
6,059,827 A 5/2000 Fenton, Jr.
6,066,160 A 5/2000 Colvin et al.
6,067,988 A 5/2000 Mueller
6,068,638 A 5/2000 Makower
6,071,292 A 6/2000 Makower et al.
6,074,416 A 6/2000 Berg et al.
6,074,417 A 6/2000 Peredo
6,074,418 A 6/2000 Buchanan et al.
6,076,529 A 6/2000 Vanney et al.
6,076,742 A 6/2000 Benary
6,077,297 A * 6/2000 Robinson A61F 2/95 623/1.11
6,079,414 A 6/2000 Roth
6,080,163 A 6/2000 Hussein et al.
6,080,170 A 6/2000 Nash et al.
6,083,257 A 7/2000 Taylor et al.
6,091,042 A 7/2000 Benary
6,092,526 A 7/2000 LaFontaine et al.
6,092,529 A 7/2000 Cox
6,093,166 A 7/2000 Knudson et al.
6,093,177 A 7/2000 Javier, Jr. et al.
6,093,185 A 7/2000 Ellis et al.
6,093,203 A 7/2000 Uflacker
6,093,530 A 7/2000 McIlroy et al.
6,096,074 A 8/2000 Pedros
6,102,941 A 8/2000 Tweden et al.
6,102,944 A 8/2000 Huynh et al.
6,106,550 A 8/2000 Magovern et al.
6,110,191 A 8/2000 Dehdashtian et al.
6,110,198 A 8/2000 Fogarty et al.
6,110,201 A 8/2000 Quijano et al.
6,113,612 A 9/2000 Swanson et al.
6,113,630 A 9/2000 Vanney et al.
6,113,823 A 9/2000 Eno
6,117,169 A 9/2000 Moe
6,120,520 A 9/2000 Saadat et al.
6,120,534 A 9/2000 Ruiz
6,123,682 A 9/2000 Knudson et al.
6,123,723 A 9/2000 Konya et al.
6,125,852 A 10/2000 Stevens et al.
6,126,649 A 10/2000 Vantassel et al.
6,126,654 A 10/2000 Giba et al.
6,126,685 A 10/2000 Lenker et al.
6,126,686 A 10/2000 Badylak et al.
6,132,451 A 10/2000 Payne et al.
6,132,473 A 10/2000 Williams et al.
6,132,986 A 10/2000 Pathak et al.
6,139,510 A 10/2000 Palermo
6,139,541 A 10/2000 Vanney et al.
6,142,987 A 11/2000 Tsugita
6,143,021 A 11/2000 Staehle
6,143,987 A 11/2000 Makita
6,146,366 A 11/2000 Schachar
6,146,415 A 11/2000 Fitz
6,146,417 A 11/2000 Ischinger
6,152,937 A 11/2000 Peterson et al.
6,152,956 A 11/2000 Pierce
6,155,264 A 12/2000 Ressemann et al.
6,156,031 A 12/2000 Aita et al.
6,156,055 A 12/2000 Ravenscroft
6,156,531 A 12/2000 Pathak et al.
6,157,852 A 12/2000 Selmon et al.
6,159,225 A 12/2000 Makower
6,159,239 A 12/2000 Greenhalgh
6,162,208 A 12/2000 Hipps
6,162,245 A 12/2000 Jayaraman
6,165,185 A 12/2000 Shennib et al.
6,165,188 A 12/2000 Saadat et al.
6,165,200 A 12/2000 Tsugita et al.
6,165,209 A 12/2000 Patterson et al.
6,167,605 B1 1/2001 Morales
6,168,579 B1 1/2001 Tsugita
6,168,614 B1 1/2001 Andersen et al.
6,168,616 B1 1/2001 Brown, III
6,171,251 B1 1/2001 Mueller et al.
6,171,327 B1 1/2001 Daniel et al.
6,171,335 B1 1/2001 Wheatley et al.
6,177,514 B1 1/2001 Pathak et al.
6,179,859 B1 1/2001 Bates et al.
6,182,664 B1 2/2001 Cosgrove
6,182,668 B1 2/2001 Tweden et al.

(56) **References Cited**

U.S. PATENT DOCUMENTS

6,183,481 B1 2/2001 Lee et al.
6,186,972 B1 2/2001 Nelson et al.
6,187,016 B1 2/2001 Hedges et al.
6,190,353 B1 2/2001 Makower et al.
6,190,393 B1 2/2001 Bevier et al.
6,190,405 B1 2/2001 Culombo et al.
6,193,726 B1 2/2001 Vanney
6,193,734 B1 2/2001 Bolduc et al.
6,196,230 B1 3/2001 Hall et al.
6,197,050 B1 3/2001 Eno et al.
6,197,053 B1 3/2001 Cosgrove et al.
6,197,296 B1 3/2001 Davies et al.
6,197,324 B1 3/2001 Crittenden
6,200,311 B1 3/2001 Danek et al.
6,200,336 B1 3/2001 Pavcnik et al.
6,203,550 B1 3/2001 Olson
6,203,556 B1 3/2001 Evans et al.
6,206,888 B1 3/2001 Bicek et al.
6,206,911 B1 3/2001 Milo
6,210,408 B1 4/2001 Chandrasekaran et al.
6,210,957 B1 4/2001 Carpentier et al.
6,213,126 B1 4/2001 LaFontaine et al.
6,214,036 B1 4/2001 Letendre et al.
6,214,041 B1 4/2001 Tweden et al.
6,214,054 B1 4/2001 Cunanan et al.
6,214,055 B1 4/2001 Simionescu et al.
6,217,527 B1 4/2001 Selmon et al.
6,217,549 B1 4/2001 Selmon et al.
6,217,575 B1 4/2001 DeVore et al.
6,217,609 B1 4/2001 Haverkost
6,218,662 B1 4/2001 Tchakarov et al.
6,221,006 B1 4/2001 Dubrul et al.
6,221,049 B1 4/2001 Selmon et al.
6,221,091 B1 4/2001 Khosravi
6,221,096 B1 4/2001 Aiba et al.
6,221,100 B1 4/2001 Strecker
6,223,752 B1 5/2001 Vanney et al.
6,224,584 B1 5/2001 March et al.
6,231,544 B1 5/2001 Tsugita et al.
6,231,546 B1 5/2001 Milo et al.
6,231,551 B1 5/2001 Barbut
6,231,587 B1 5/2001 Makower
6,231,602 B1 5/2001 Carpentier et al.
6,235,000 B1 5/2001 Milo et al.
6,237,607 B1 5/2001 Vanney et al.
6,238,406 B1 5/2001 Ellis et al.
6,241,667 B1 6/2001 Vetter et al.
6,241,738 B1 6/2001 Dereume
6,241,741 B1 6/2001 Duhaylongsod et al.
6,241,757 B1 6/2001 An et al.
6,245,102 B1 6/2001 Jayaraman
6,245,103 B1 6/2001 Stinson
6,245,105 B1 6/2001 Nguyen et al.
6,248,112 B1 6/2001 Gambale et al.
6,248,116 B1 6/2001 Chevillon et al.
6,250,305 B1 6/2001 Tweden
6,251,079 B1 6/2001 Gambale et al.
6,251,104 B1 6/2001 Kesten et al.
6,251,116 B1 6/2001 Shennib et al.
6,251,135 B1 6/2001 Stinson et al.
6,251,418 B1 6/2001 Ahern et al.
6,253,768 B1 7/2001 Wilk
6,253,769 B1 7/2001 LaFONTAINE et al.
6,254,564 B1 7/2001 Wilk et al.
6,254,635 B1 7/2001 Schroeder et al.
6,254,636 B1 7/2001 Peredo
6,257,634 B1 7/2001 Wei
6,258,052 B1 7/2001 Milo
6,258,087 B1 7/2001 Edwards et al.
6,258,114 B1 7/2001 Konya et al.
6,258,115 B1 7/2001 Dubrul
6,258,119 B1 7/2001 Hussein et al.
6,258,120 B1 7/2001 McKenzie et al.
6,258,129 B1 7/2001 Dybdal et al.
6,258,150 B1 7/2001 MacKellar
6,261,304 B1 7/2001 Hall et al.
6,267,783 B1 7/2001 Letendre et al.
6,269,819 B1 8/2001 Oz et al.
6,270,513 B1 8/2001 Tsugita et al.
6,270,521 B1 8/2001 Fischell et al.
6,270,526 B1 8/2001 Cox
6,273,876 B1 8/2001 Klima et al.
6,273,895 B1 8/2001 Pinchuk et al.
6,276,661 B1 8/2001 Laird
6,277,555 B1 8/2001 Duran et al.
6,283,127 B1 9/2001 Sterman et al.
6,283,951 B1 9/2001 Flaherty et al.
6,283,983 B1 9/2001 Makower et al.
6,283,995 B1 9/2001 Moe et al.
6,285,903 B1 9/2001 Rosenthal et al.
6,287,317 B1 9/2001 Makower et al.
6,287,334 B1 9/2001 Moll et al.
6,287,338 B1 9/2001 Sarnowski et al.
6,287,339 B1 9/2001 Vazquez et al.
6,290,709 B1 9/2001 Ellis et al.
6,290,728 B1 9/2001 Phelps et al.
6,296,662 B1 10/2001 Caffey
6,299,637 B1 10/2001 Shaolian et al.
6,302,875 B1 10/2001 Makower et al.
6,302,892 B1 10/2001 Wilk
6,302,906 B1 10/2001 Goicoechea et al.
6,306,164 B1 10/2001 Kujawski
6,309,382 B1 10/2001 Garrison et al.
6,309,417 B1 10/2001 Spence et al.
6,311,693 B1 11/2001 Sterman et al.
6,312,465 B1 11/2001 Griffin et al.
6,319,281 B1 11/2001 Patel
6,322,548 B1 11/2001 Payne et al.
6,322,593 B1 11/2001 Pathak et al.
6,325,067 B1 12/2001 Sterman et al.
6,327,772 B1 12/2001 Zadno-Azizi et al.
6,330,884 B1 12/2001 Kim
6,331,189 B1 12/2001 Wolinsky et al.
6,334,873 B1 1/2002 Lane et al.
6,336,934 B1 1/2002 Gilson et al.
6,336,937 B1 1/2002 Vonesh et al.
6,338,735 B1 1/2002 Stevens
6,338,740 B1 1/2002 Carpentier
6,342,070 B1 1/2002 Nguyen-Thien-Nhon
6,344,044 B1 2/2002 Fulkerson et al.
6,346,074 B1 2/2002 Roth
6,346,116 B1 2/2002 Brooks et al.
6,348,063 B1 2/2002 Yassour et al.
6,350,248 B1 2/2002 Knudson et al.
6,350,277 B1 2/2002 Kocur
6,350,278 B1 2/2002 Lenker et al.
6,352,547 B1 3/2002 Brown et al.
6,352,554 B2 3/2002 De Paulis
6,352,708 B1 3/2002 Duran et al.
6,357,104 B1 3/2002 Myers
6,358,277 B1 3/2002 Duran
6,361,519 B1 3/2002 Knudson et al.
6,361,545 B1 3/2002 Macoviak et al.
6,363,938 B2 4/2002 Saadat et al.
6,363,939 B1 4/2002 Wilk
6,364,895 B1 4/2002 Greenhalgh
6,368,338 B1 4/2002 Konya et al.
6,371,970 B1 4/2002 Khosravi et al.
6,371,983 B1 4/2002 Lane
6,375,615 B1 4/2002 Flaherty et al.
6,378,221 B1 4/2002 Ekholm, Jr. et al.
6,379,319 B1 4/2002 Garibotto et al.
6,379,365 B1 4/2002 Diaz
6,379,372 B1 4/2002 Dehdashtian et al.
6,379,383 B1 4/2002 Palmaz et al.
6,379,740 B1 4/2002 Rinaldi et al.
6,380,457 B1 4/2002 Yurek et al.
6,383,193 B1 5/2002 Cathcart et al.
6,387,119 B2 5/2002 Wolf et al.
6,387,122 B1 5/2002 Cragg
6,390,098 B1 5/2002 LaFontaine et al.
6,391,051 B2 5/2002 Sullivan, III et al.
6,391,538 B1 5/2002 Vyavahare et al.
6,395,208 B1 5/2002 Herweck et al.

(56) **References Cited**

U.S. PATENT DOCUMENTS

6,398,807 B1 6/2002 Chouinard et al.
6,401,720 B1 6/2002 Stevens et al.
6,402,736 B1 6/2002 Brown et al.
6,402,740 B1 6/2002 Ellis et al.
6,406,488 B1 6/2002 Tweden et al.
6,406,491 B1 6/2002 Vanney
6,406,493 B1 6/2002 Tu et al.
6,409,697 B2 6/2002 Eno et al.
6,409,750 B1 6/2002 Hyodoh et al.
6,409,751 B1 6/2002 Hall et al.
6,409,755 B1 6/2002 Vrba
6,409,759 B1 6/2002 Peredo
6,413,275 B1 7/2002 Nguyen et al.
6,416,490 B1 7/2002 Ellis et al.
6,416,510 B1 7/2002 Altman et al.
6,423,089 B1 7/2002 Gingras et al.
6,425,916 B1 7/2002 Garrison et al.
6,432,119 B1 8/2002 Saadat
6,432,126 B1 8/2002 Gambale et al.
6,432,127 B1 8/2002 Kim et al.
6,432,132 B1 8/2002 Cottone et al.
6,440,164 B1 8/2002 DiMatteo et al.
6,443,158 B1 9/2002 LaFontaine et al.
6,447,522 B2 9/2002 Gambale et al.
6,447,539 B1 9/2002 Nelson et al.
6,451,025 B1 9/2002 Jervis
6,451,054 B1 9/2002 Stevens
6,454,760 B2 9/2002 Vanney
6,454,794 B1 9/2002 Knudson et al.
6,454,799 B1 9/2002 Schreck
6,458,092 B1 10/2002 Gambale et al.
6,458,140 B2 10/2002 Akin et al.
6,458,153 B1 10/2002 Bailey et al.
6,458,323 B1 10/2002 Boekstegers
6,461,382 B1 10/2002 Cao
6,464,709 B2 10/2002 Shennib et al.
6,468,303 B1 10/2002 Amplatz et al.
6,468,660 B2 10/2002 Ogle et al.
6,471,723 B1 10/2002 Ashworth et al.
6,475,169 B2 11/2002 Ferrera
6,475,226 B1 11/2002 Belef et al.
6,475,239 B1 11/2002 Campbell et al.
6,475,244 B2 11/2002 Herweck et al.
6,478,819 B2 11/2002 Moe
6,479,079 B1 11/2002 Pathak et al.
6,482,220 B1 11/2002 Mueller
6,482,228 B1 11/2002 Norred
6,485,501 B1 11/2002 Green
6,485,502 B2 11/2002 Don Michael et al.
6,485,513 B1 11/2002 Fan
6,485,524 B2 11/2002 Strecker
6,487,581 B1 11/2002 Spence et al.
6,488,704 B1 12/2002 Connelly et al.
6,491,689 B1 12/2002 Ellis et al.
6,491,707 B2 12/2002 Makower et al.
6,494,211 B1 12/2002 Boyd et al.
6,494,897 B2 12/2002 Sterman et al.
6,494,909 B2 12/2002 Greenhalgh
6,503,272 B2 1/2003 Duerig et al.
6,508,496 B1 1/2003 Huang
6,508,803 B1 1/2003 Horikawa et al.
6,508,825 B1 1/2003 Selmon et al.
6,508,833 B2 1/2003 Pavcnik et al.
6,509,145 B1 1/2003 Torrianni
6,511,458 B2 1/2003 Milo et al.
6,511,491 B2 1/2003 Grudem et al.
6,514,217 B1 2/2003 Selmon et al.
6,514,271 B2 2/2003 Evans et al.
6,517,527 B2 2/2003 Gambale et al.
6,517,558 B2 2/2003 Gittings et al.
6,517,573 B1 2/2003 Pollock et al.
6,521,179 B1 2/2003 Girardot et al.
6,524,323 B1 2/2003 Nash et al.
6,524,335 B1 2/2003 Hartley et al.
6,527,800 B1 3/2003 McGuckin, Jr. et al.
6,530,949 B2 3/2003 Konya et al.
6,530,952 B2 3/2003 Vesely
6,533,807 B2 3/2003 Wolinsky et al.
6,537,297 B2 3/2003 Tsugita et al.
6,537,310 B1 3/2003 Palmaz et al.
6,540,768 B1 4/2003 Diaz et al.
6,540,782 B1 4/2003 Snyders
6,544,230 B1 4/2003 Flaherty et al.
6,547,827 B2 4/2003 Carpentier et al.
6,551,303 B1 4/2003 Van Tassel et al.
6,558,318 B1 5/2003 Daniel et al.
6,558,417 B2 5/2003 Peredo
6,558,418 B2 5/2003 Carpentier et al.
6,558,429 B2 5/2003 Taylor
6,559,132 B1 5/2003 Holmer
6,561,998 B1 5/2003 Roth et al.
6,562,031 B2 5/2003 Chandrasekaran et al.
6,562,058 B2 5/2003 Seguin et al.
6,562,063 B1 5/2003 Euteneuer et al.
6,562,069 B2 5/2003 Cai et al.
6,564,805 B2 5/2003 Garrison et al.
6,565,528 B1 5/2003 Mueller
6,565,594 B1 5/2003 Herweck et al.
6,569,145 B1 5/2003 Shmulewitz et al.
6,569,147 B1 5/2003 Evans et al.
6,569,196 B1 5/2003 Vesely
6,572,593 B1 6/2003 Daum
6,572,642 B2 6/2003 Rinaldi et al.
6,572,643 B1 6/2003 Gharibadeh
6,572,652 B2 6/2003 Shaknovich
6,575,168 B2 6/2003 LaFontaine et al.
6,579,311 B1 6/2003 Makower
6,582,444 B2 6/2003 Wilk
6,582,460 B1 6/2003 Cryer
6,582,462 B1 6/2003 Andersen et al.
6,585,756 B1 7/2003 Strecker
6,585,758 B1 7/2003 Chouinard et al.
6,585,766 B1 7/2003 Huynh et al.
6,589,279 B1 7/2003 Anderson et al.
6,592,546 B1 7/2003 Barbut et al.
6,592,614 B2 7/2003 Lenker et al.
6,599,304 B1 7/2003 Selmon et al.
6,600,803 B2 7/2003 Bruder et al.
6,605,053 B1 8/2003 Kamm et al.
6,605,112 B1 8/2003 Moll et al.
6,605,113 B2 8/2003 Wilk
6,608,040 B1 8/2003 Lin et al.
6,610,077 B1 8/2003 Hancock et al.
6,610,085 B1 8/2003 Lazarus
6,610,100 B2 8/2003 Phelps et al.
6,613,069 B2 9/2003 Boyd et al.
6,613,077 B2 9/2003 Gilligan et al.
6,613,079 B1 9/2003 Wolinsky et al.
6,613,081 B2 9/2003 Kim et al.
6,613,086 B1 9/2003 Moe et al.
6,616,675 B1 9/2003 Evard et al.
6,616,682 B2 9/2003 Joergensen et al.
6,622,604 B1 9/2003 Chouinard et al.
6,623,491 B2 9/2003 Thompson
6,623,518 B2 9/2003 Thompson et al.
6,623,521 B2 9/2003 Steinke et al.
6,626,938 B1 9/2003 Butaric et al.
6,626,939 B1 9/2003 Burnside et al.
6,632,241 B1 10/2003 Hancock et al.
6,632,243 B1 10/2003 Zadno-Azizi et al.
6,632,470 B2 10/2003 Morra et al.
6,635,068 B1 10/2003 Dubrul et al.
6,635,079 B2 10/2003 Unsworth et al.
6,635,080 B1 10/2003 Lauterjung et al.
6,635,085 B1 10/2003 Caffey et al.
6,638,237 B1 10/2003 Guiles et al.
6,638,247 B1 10/2003 Selmon et al.
6,638,293 B1 10/2003 Makower et al.
6,641,610 B2 11/2003 Wolf et al.
6,651,670 B2 11/2003 Rapacki et al.
6,651,672 B2 11/2003 Roth
6,652,540 B1 11/2003 Cole et al.
6,652,546 B1 11/2003 Nash et al.
6,652,555 B1 11/2003 Vantassel et al.

(56) **References Cited**

U.S. PATENT DOCUMENTS

6,652,571	B1	11/2003	White et al.
6,652,578	B2	11/2003	Bailey et al.
6,655,386	B1	12/2003	Makower et al.
6,656,213	B2	12/2003	Solem
6,660,003	B1	12/2003	DeVore et al.
6,660,024	B1	12/2003	Flaherty et al.
6,663,588	B2	12/2003	DuBois et al.
6,663,663	B2	12/2003	Kim et al.
6,663,667	B2	12/2003	Dehdashtian et al.
6,666,863	B2	12/2003	Wentzel et al.
6,669,709	B1	12/2003	Cohn et al.
6,669,724	B2	12/2003	Park et al.
6,673,089	B1	1/2004	Yassour et al.
6,673,101	B1	1/2004	Fitzgerald et al.
6,673,106	B2	1/2004	Mitelberg et al.
6,673,109	B2	1/2004	Cox
6,676,668	B2	1/2004	Mercereau et al.
6,676,692	B2	1/2004	Rabkin et al.
6,676,693	B1	1/2004	Belding et al.
6,676,698	B2	1/2004	McGuckin, Jr. et al.
6,679,268	B2	1/2004	Stevens et al.
6,682,543	B2	1/2004	Barbut et al.
6,682,558	B2	1/2004	Tu et al.
6,682,559	B2	1/2004	Myers et al.
6,685,648	B2	2/2004	Flaherty et al.
6,685,739	B2	2/2004	DiMatteo et al.
6,689,144	B2	2/2004	Gerberding
6,689,164	B1	2/2004	Seguin
6,692,512	B2	2/2004	Jang
6,692,513	B2	2/2004	Streeter et al.
6,694,983	B2	2/2004	Wolf et al.
6,695,864	B2	2/2004	Macoviak et al.
6,695,865	B2	2/2004	Boyle et al.
6,695,875	B2	2/2004	Stelter et al.
6,695,878	B2	2/2004	McGuckin, Jr. et al.
6,699,274	B2	3/2004	Stinson
6,701,932	B2	3/2004	Knudson et al.
6,702,851	B1	3/2004	Chinn et al.
6,709,425	B2	3/2004	Gambale et al.
6,709,444	B1	3/2004	Makower
6,712,842	B1	3/2004	Gifford, III et al.
6,712,843	B2	3/2004	Elliott
6,714,841	B1	3/2004	Wright et al.
6,714,842	B1	3/2004	Ito
6,719,770	B2	4/2004	Laufer et al.
6,719,787	B2	4/2004	Cox
6,719,788	B2	4/2004	Cox
6,719,789	B2	4/2004	Cox
6,723,116	B2	4/2004	Taheri
6,723,122	B2	4/2004	Yang et al.
6,726,677	B1	4/2004	Flaherty et al.
6,729,356	B1	5/2004	Baker et al.
6,730,118	B2	5/2004	Spenser et al.
6,730,121	B2	5/2004	Ortiz et al.
6,730,377	B2	5/2004	Wang
6,733,513	B2	5/2004	Boyle et al.
6,733,525	B2	5/2004	Yang et al.
6,736,827	B1	5/2004	McAndrew et al.
6,736,839	B2	5/2004	Cummings
6,736,845	B2	5/2004	Marquez et al.
6,736,846	B2	5/2004	Cox
6,743,252	B1	6/2004	Bates et al.
6,746,464	B1	6/2004	Makower
6,752,828	B2	6/2004	Thornton
6,755,854	B2	6/2004	Gillick et al.
6,755,855	B2	6/2004	Yurek et al.
6,758,855	B2	7/2004	Fulton, III et al.
6,764,503	B1	7/2004	Ishimaru
6,764,509	B2	7/2004	Chinn et al.
6,767,345	B2	7/2004	St. Germain et al.
6,767,362	B2	7/2004	Schreck
6,769,434	B2	8/2004	Liddicoat et al.
6,773,454	B2	8/2004	Wholey et al.
6,773,455	B2	8/2004	Allen et al.
6,773,456	B1	8/2004	Gordon et al.
6,774,278	B1	8/2004	Ragheb et al.
6,776,791	B1	8/2004	Stallings et al.
6,786,925	B1	9/2004	Schoon et al.
6,786,929	B2	9/2004	Gambale et al.
6,790,229	B1	9/2004	Berreklouw
6,790,230	B2	9/2004	Beyersdorf et al.
6,790,237	B2	9/2004	Stinson
6,792,979	B2	9/2004	Konya et al.
6,797,000	B2	9/2004	Simpson et al.
6,797,002	B2	9/2004	Spence et al.
6,802,319	B2	10/2004	Stevens et al.
6,802,858	B2	10/2004	Gambale et al.
6,805,711	B2	10/2004	Quijano et al.
6,808,498	B2	10/2004	Laroya et al.
6,808,504	B2	10/2004	Schorgl et al.
6,808,529	B2	10/2004	Fulkerson
6,814,746	B2	11/2004	Thompson et al.
6,814,754	B2	11/2004	Greenhalgh
6,820,676	B2	11/2004	Palmaz et al.
6,821,211	B2	11/2004	Otten et al.
6,821,297	B2	11/2004	Snyders
6,824,041	B2	11/2004	Grieder et al.
6,824,970	B2	11/2004	Vyavahare et al.
6,830,568	B1	12/2004	Kesten et al.
6,830,575	B2	12/2004	Stenzel et al.
6,830,584	B1	12/2004	Seguin
6,830,585	B1	12/2004	Artof et al.
6,830,586	B2	12/2004	Quijano et al.
6,837,901	B2	1/2005	Rabkin et al.
6,837,902	B2	1/2005	Nguyen et al.
6,840,957	B2	1/2005	DiMatteo et al.
6,843,802	B1	1/2005	Villalobos et al.
6,846,325	B2	1/2005	Liddicoat
6,849,084	B2	2/2005	Rabkin et al.
6,849,085	B2	2/2005	Marton
6,854,467	B2	2/2005	Boekstegers
6,860,898	B2	3/2005	Stack et al.
6,861,211	B2	3/2005	Levy et al.
6,863,668	B2	3/2005	Gillespie et al.
6,863,684	B2	3/2005	Kim et al.
6,863,688	B2	3/2005	Ralph et al.
6,866,650	B2	3/2005	Stevens et al.
6,866,669	B2	3/2005	Buzzard et al.
6,872,223	B2	3/2005	Roberts et al.
6,872,226	B2	3/2005	Cali et al.
6,875,231	B2	4/2005	Anduiza et al.
6,881,199	B2	4/2005	Wilk et al.
6,881,220	B2	4/2005	Edwin et al.
6,883,522	B2	4/2005	Spence et al.
6,887,266	B2	5/2005	Williams et al.
6,890,330	B2	5/2005	Streeter et al.
6,890,340	B2	5/2005	Duane
6,893,459	B1	5/2005	Macoviak
6,893,460	B2	5/2005	Spenser et al.
6,896,690	B1	5/2005	Lambrecht et al.
6,899,704	B2	5/2005	Sterman et al.
6,905,743	B1	6/2005	Chen et al.
6,908,481	B2	6/2005	Cribier
6,911,036	B2	6/2005	Douk et al.
6,911,040	B2	6/2005	Johnson et al.
6,911,043	B2	6/2005	Myers et al.
6,913,021	B2	7/2005	Knudson et al.
6,913,600	B2	7/2005	Valley et al.
6,916,304	B2	7/2005	Eno et al.
6,920,674	B2	7/2005	Thornton
6,920,732	B2	7/2005	Mårtensson
6,926,690	B2	8/2005	Renati
6,926,732	B2	8/2005	Derus et al.
6,929,009	B2	8/2005	Makower et al.
6,929,011	B2	8/2005	Knudson et al.
6,929,653	B2	8/2005	Strecter
6,936,058	B2	8/2005	Forde et al.
6,936,066	B2	8/2005	Palmaz et al.
6,936,067	B2	8/2005	Buchanan
6,939,352	B2	9/2005	Buzzard et al.
6,939,359	B2	9/2005	Tu et al.
6,939,365	B1	9/2005	Fogarty et al.
6,939,370	B2	9/2005	Hartley et al.
6,942,682	B2	9/2005	Vrba et al.

(56) **References Cited**

U.S. PATENT DOCUMENTS

6,945,949 B2 9/2005 Wilk
6,945,997 B2 9/2005 Huynh et al.
6,949,080 B2 9/2005 Wolf et al.
6,949,118 B2 9/2005 Kohler et al.
6,951,571 B1 10/2005 Srivastava
6,953,332 B1 10/2005 Kurk et al.
6,953,481 B2 10/2005 Phelps et al.
6,955,175 B2 10/2005 Stevens et al.
6,955,681 B2 10/2005 Evans et al.
6,964,652 B2 11/2005 Guiles et al.
6,964,673 B2 11/2005 Tsugita et al.
6,964,676 B1 11/2005 Gerberding et al.
6,969,395 B2 11/2005 Eskuri
6,972,025 B2 12/2005 Wasdyke
6,972,029 B2 12/2005 Mayrhofer et al.
6,974,464 B2 12/2005 Quijano et al.
6,974,474 B2 12/2005 Pavcnik et al.
6,974,476 B2 12/2005 McGuckin, Jr. et al.
6,976,990 B2 12/2005 Mowry
6,979,350 B2 12/2005 Moll et al.
6,984,242 B2 1/2006 Campbell et al.
6,984,244 B2 1/2006 Perez et al.
6,986,742 B2 1/2006 Hart et al.
6,986,784 B1 1/2006 Weiser et al.
6,988,949 B2 1/2006 Wang
6,989,027 B2 1/2006 Allen et al.
6,989,028 B2 1/2006 Lashinski et al.
6,991,649 B2 1/2006 Sievers
7,001,425 B2 2/2006 McCullagh et al.
7,004,176 B2 2/2006 Lau
7,008,397 B2 3/2006 Tweden et al.
7,011,095 B2 3/2006 Wolf et al.
7,011,681 B2 3/2006 Vesely
7,014,655 B2 3/2006 Barbarash et al.
7,018,401 B1 3/2006 Hyodoh et al.
7,018,406 B2 3/2006 Seguin et al.
7,018,408 B2 3/2006 Bailey et al.
7,022,134 B1 4/2006 Quijano et al.
7,025,773 B2 4/2006 Gittings et al.
7,025,780 B2 4/2006 Gabbay
7,025,791 B2 4/2006 Levine et al.
7,028,692 B2 4/2006 Sterman et al.
7,037,331 B2 5/2006 Mitelberg et al.
7,037,333 B2 5/2006 Myers et al.
7,041,128 B2 5/2006 McGuckin, Jr. et al.
7,041,132 B2 5/2006 Quijano et al.
7,044,966 B2 5/2006 Svanidze et al.
7,048,014 B2 5/2006 Hyodoh et al.
7,048,757 B2 5/2006 Shaknovich
7,050,276 B2 5/2006 Nishiyama
7,074,236 B2 7/2006 Rabkin et al.
7,078,163 B2 7/2006 Torrianni
7,081,132 B2 7/2006 Cook et al.
7,097,658 B2 8/2006 Oktay
7,097,659 B2 8/2006 Woolfson et al.
7,101,396 B2 9/2006 Artof et al.
7,105,016 B2 9/2006 Shiu et al.
7,108,715 B2 9/2006 Lawrence-Brown et al.
7,115,141 B2 10/2006 Menz et al.
7,118,585 B2 10/2006 Addis
7,122,020 B2 10/2006 Mogul
7,125,418 B2 10/2006 Duran et al.
7,128,759 B2 10/2006 Osborne et al.
7,137,184 B2 11/2006 Schreck
7,141,063 B2 11/2006 White et al.
7,141,064 B2 11/2006 Scott et al.
7,143,312 B1 11/2006 Wang et al.
7,147,662 B1 12/2006 Pollock et al.
7,147,663 B1 12/2006 Berg et al.
7,153,324 B2 12/2006 Case et al.
7,160,319 B2 1/2007 Chouinard et al.
7,163,556 B2 1/2007 Xie et al.
7,166,097 B2 1/2007 Barbut
7,175,652 B2 2/2007 Cook et al.
7,175,653 B2 2/2007 Gaber
7,175,654 B2 2/2007 Bonsignore et al.
7,175,656 B2 2/2007 Khairkhahan
7,179,290 B2 2/2007 Cao
7,186,265 B2 3/2007 Sharkawy et al.
7,189,258 B2 3/2007 Johnson et al.
7,189,259 B2 3/2007 Simionescu et al.
7,191,018 B2 3/2007 Gielen et al.
7,191,406 B1 3/2007 Barber et al.
7,195,641 B2 3/2007 Palmaz et al.
7,198,646 B2 4/2007 Figulla et al.
7,201,761 B2 4/2007 Woolfson et al.
7,201,772 B2 4/2007 Schwammenthal et al.
7,214,344 B2 5/2007 Carpentier et al.
7,217,287 B2 5/2007 Wilson et al.
7,235,092 B2 6/2007 Banas et al.
7,235,093 B2 6/2007 Gregorich
7,238,200 B2 7/2007 Lee et al.
7,241,257 B1 7/2007 Ainsworth et al.
7,252,682 B2 8/2007 Seguin
7,258,696 B2 8/2007 Rabkin et al.
7,258,891 B2 8/2007 Pacetti et al.
7,261,732 B2 8/2007 Justino
7,264,632 B2 9/2007 Wright et al.
7,267,686 B2 9/2007 DiMatteo et al.
7,276,078 B2 10/2007 Spenser et al.
7,276,084 B2 10/2007 Yang et al.
7,285,130 B2 10/2007 Austin
7,297,150 B2 11/2007 Cartledge et al.
7,300,457 B2 11/2007 Palmaz
7,300,463 B2 11/2007 Liddicoat
7,311,730 B2 12/2007 Gabbay
7,314,449 B2 1/2008 Pfeiffer et al.
7,314,485 B2 1/2008 Mathis
7,314,880 B2 1/2008 Chang et al.
7,316,706 B2 1/2008 Bloom et al.
7,316,712 B2 1/2008 Peredo
7,317,005 B2 1/2008 Hoekstra et al.
7,317,942 B2 1/2008 Brown
7,317,950 B2 1/2008 Lee
7,318,278 B2 1/2008 Zhang et al.
7,318,998 B2 1/2008 Goldstein et al.
7,319,096 B2 1/2008 Malm et al.
7,320,692 B1 1/2008 Bender et al.
7,320,704 B2 1/2008 Lashinski et al.
7,320,705 B2 1/2008 Quintessenza
7,320,706 B2 1/2008 Al-Najjar
7,322,932 B2 1/2008 Xie et al.
7,323,006 B2 1/2008 Andreas et al.
7,323,066 B1 1/2008 Budron
7,326,174 B2 2/2008 Cox et al.
7,326,219 B2 2/2008 Mowry et al.
7,326,236 B2 2/2008 Andreas et al.
7,327,862 B2 2/2008 Murphy et al.
7,329,278 B2 2/2008 Seguin et al.
7,329,279 B2 2/2008 Haug et al.
7,329,280 B2 2/2008 Bolling et al.
7,329,777 B2 2/2008 Harter et al.
7,331,991 B2 2/2008 Kheradvar et al.
7,331,993 B2 2/2008 White
7,333,643 B2 2/2008 Murphy et al.
7,335,158 B2 2/2008 Taylor
7,335,213 B1 2/2008 Hyde et al.
7,335,218 B2 2/2008 Wilson et al.
7,335,490 B2 2/2008 Van Gilst et al.
7,338,484 B2 3/2008 Schoon et al.
7,338,520 B2 3/2008 Bailey et al.
7,361,189 B2 4/2008 Case et al.
7,361,190 B2 4/2008 Shaoulian et al.
7,364,588 B2 4/2008 Mathis et al.
7,371,258 B2 5/2008 Woo et al.
7,374,560 B2 5/2008 Ressemann et al.
7,374,571 B2 5/2008 Pease et al.
7,377,895 B2 5/2008 Spence et al.
7,377,938 B2 5/2008 Sarac et al.
7,377,940 B2 5/2008 Ryan et al.
7,381,210 B2 6/2008 Zarbatany et al.
7,381,216 B2 6/2008 Buzzard et al.
7,381,218 B2 6/2008 Schreck
7,381,219 B2 6/2008 Salahieh et al.

(56) **References Cited**

U.S. PATENT DOCUMENTS

7,381,220 B2 6/2008 Macoviak et al.
7,384,411 B1 6/2008 Condado
7,387,640 B2 6/2008 Cummings
7,389,874 B2 6/2008 Quest et al.
7,390,325 B2 6/2008 Wang et al.
7,393,358 B2 7/2008 Malewicz
7,393,360 B2 7/2008 Spenser et al.
7,396,364 B2 7/2008 Moaddeb et al.
7,399,315 B2 7/2008 Iobbi
7,402,171 B2 7/2008 Osborne et al.
7,404,792 B2 7/2008 Spence et al.
7,404,793 B2 7/2008 Lau et al.
7,405,259 B2 7/2008 Frye et al.
7,410,499 B2 8/2008 Bicer
7,412,274 B2 8/2008 Mejia
7,412,290 B2 8/2008 Janke et al.
7,415,861 B2 8/2008 Sokel
7,416,530 B2 8/2008 Turner et al.
7,422,603 B2 9/2008 Lane
7,422,606 B2 9/2008 Ung-Chhun et al.
7,423,032 B2 9/2008 Ozaki et al.
7,426,413 B2 9/2008 Balczewski et al.
7,427,279 B2 9/2008 Frazier et al.
7,427,287 B2 9/2008 Turovskiy et al.
7,427,291 B2 9/2008 Liddicoat et al.
7,429,269 B2 9/2008 Schwammenthal et al.
7,430,448 B1 9/2008 Zimmer et al.
7,430,484 B2 9/2008 Ohara
7,431,691 B1 10/2008 Wilk
7,431,733 B2 10/2008 Knight
7,435,059 B2 10/2008 Smith et al.
7,435,257 B2 10/2008 Lashinski et al.
7,442,204 B2 10/2008 Schwammenthal et al.
RE40,570 E 11/2008 Carpentier et al.
7,445,630 B2 11/2008 Lashinski et al.
7,445,631 B2 11/2008 Salahieh et al.
7,445,632 B2 11/2008 McGuckin, Jr. et al.
7,452,371 B2 11/2008 Pavcnik et al.
7,455,689 B2 11/2008 Johnson
7,462,156 B2 12/2008 Mitrev
7,462,184 B2 12/2008 Worley et al.
7,462,191 B2 12/2008 Spenser et al.
7,468,050 B1 12/2008 Kantrowitz
7,470,282 B2 * 12/2008 Shelso A61F 2/95 623/1.12
7,470,284 B2 12/2008 Lambrecht et al.
7,470,285 B2 12/2008 Nugent et al.
7,473,271 B2 1/2009 Gunderson
7,473,275 B2 1/2009 Marquez
7,473,417 B2 1/2009 Zeltinger et al.
7,476,196 B2 1/2009 Spence et al.
7,476,199 B2 1/2009 Spence et al.
7,476,200 B2 1/2009 Tal
7,476,244 B2 1/2009 Buzzard et al.
7,481,838 B2 1/2009 Carpentier et al.
7,485,088 B2 2/2009 Murphy et al.
7,485,143 B2 2/2009 Webler et al.
7,488,346 B2 2/2009 Navia
7,491,232 B2 2/2009 Bolduc et al.
7,493,869 B1 2/2009 Foster et al.
7,497,824 B2 3/2009 Taylor
7,500,949 B2 3/2009 Gottlieb et al.
7,500,989 B2 3/2009 Solem et al.
7,503,929 B2 3/2009 Johnson et al.
7,503,930 B2 3/2009 Sharkawy et al.
7,507,199 B2 3/2009 Wang et al.
7,510,572 B2 3/2009 Gabbay
7,510,574 B2 3/2009 Le et al.
7,510,575 B2 3/2009 Spenser et al.
7,510,577 B2 3/2009 Moaddeb et al.
7,513,863 B2 4/2009 Bolling et al.
7,513,909 B2 4/2009 Lane et al.
7,522,950 B2 4/2009 Fuimaono et al.
7,524,330 B2 4/2009 Berreklouw
7,530,253 B2 5/2009 Spenser et al.
7,530,995 B2 5/2009 Quijano et al.
7,534,261 B2 5/2009 Friedman
7,544,206 B2 6/2009 Cohn
7,547,322 B2 6/2009 Sarac et al.
7,553,324 B2 6/2009 Andreas et al.
7,556,386 B2 7/2009 Smith
7,556,646 B2 7/2009 Yang et al.
7,569,071 B2 8/2009 Haverkost et al.
7,578,828 B2 8/2009 Gittings et al.
7,585,321 B2 9/2009 Cribier
7,591,848 B2 9/2009 Allen
7,594,974 B2 9/2009 Cali et al.
7,601,159 B2 10/2009 Ewers et al.
7,601,195 B2 10/2009 Ichikawa
7,608,099 B2 10/2009 Johnson et al.
7,611,534 B2 11/2009 Kapadia et al.
7,618,446 B2 11/2009 Andersen et al.
7,622,276 B2 11/2009 Cunanan et al.
7,625,403 B2 12/2009 Krivoruchko
7,628,802 B2 12/2009 White et al.
7,628,803 B2 12/2009 Pavcnik et al.
7,632,296 B2 12/2009 Malewicz
7,632,298 B2 12/2009 Hijlkema et al.
7,635,386 B1 12/2009 Gammie
7,641,687 B2 1/2010 Chinn et al.
7,651,519 B2 1/2010 Dittman
7,655,034 B2 2/2010 Mitchell et al.
7,674,282 B2 3/2010 Wu et al.
7,682,390 B2 3/2010 Seguin
7,704,222 B2 4/2010 Wilk et al.
7,704,277 B2 4/2010 Zakay et al.
7,708,775 B2 5/2010 Rowe et al.
7,712,606 B2 5/2010 Salahieh et al.
7,715,903 B2 5/2010 Hartley et al.
7,717,955 B2 5/2010 Lane et al.
7,722,638 B2 5/2010 Deyette, Jr. et al.
7,722,662 B2 5/2010 Steinke et al.
7,722,666 B2 5/2010 Lafontaine
7,722,671 B1 5/2010 Carlyle et al.
7,731,742 B2 6/2010 Schlick et al.
7,735,493 B2 6/2010 van der Burg et al.
7,736,327 B2 6/2010 Wilk et al.
7,736,388 B2 6/2010 Goldfarb et al.
7,743,481 B2 6/2010 Lafont et al.
7,748,389 B2 7/2010 Salahieh et al.
7,758,625 B2 7/2010 Wu et al.
7,763,065 B2 7/2010 Schmid et al.
7,771,463 B2 8/2010 Ton et al.
7,771,467 B2 8/2010 Svensson
7,776,083 B2 8/2010 Vesely
7,780,725 B2 8/2010 Haug et al.
7,780,726 B2 8/2010 Seguin
7,785,360 B2 8/2010 Freitag
7,794,487 B2 9/2010 Majercak et al.
7,799,046 B2 9/2010 White et al.
7,799,065 B2 9/2010 Pappas
7,803,185 B2 9/2010 Gabbay
7,806,919 B2 10/2010 Bloom et al.
7,823,267 B2 11/2010 Bolduc
7,824,442 B2 11/2010 Salahieh et al.
7,824,443 B2 11/2010 Salahieh et al.
7,833,262 B2 11/2010 McGuckin, Jr. et al.
7,837,727 B2 11/2010 Goetz et al.
7,846,203 B2 12/2010 Cribier
7,846,204 B2 12/2010 Letac et al.
7,854,758 B2 12/2010 Taheri
7,857,845 B2 12/2010 Stacchino et al.
7,862,602 B2 1/2011 Licata et al.
7,867,274 B2 1/2011 Hill et al.
7,887,583 B2 2/2011 Macoviak
7,892,276 B2 2/2011 Stocker et al.
7,892,292 B2 2/2011 Stack et al.
7,896,913 B2 3/2011 Damm et al.
7,896,915 B2 3/2011 Guyenot et al.
7,914,569 B2 3/2011 Nguyen et al.
7,914,574 B2 3/2011 Schmid et al.
7,914,575 B2 3/2011 Guyenot et al.
7,918,880 B2 4/2011 Austin
7,927,363 B2 4/2011 Perouse

(56) **References Cited**

U.S. PATENT DOCUMENTS

7,938,851	B2	5/2011	Olson et al.
7,947,071	B2	5/2011	Schmid et al.
7,947,075	B2	5/2011	Goetz et al.
7,951,189	B2	5/2011	Haverkost et al.
7,959,666	B2	6/2011	Salahieh et al.
7,959,672	B2	6/2011	Salahieh et al.
7,967,853	B2	6/2011	Eidenschink et al.
7,972,359	B2	7/2011	Kreidler
7,972,376	B1	7/2011	Dove et al.
7,972,378	B2	7/2011	Tabor et al.
7,988,724	B2	8/2011	Salahieh et al.
7,993,386	B2	8/2011	Elliott
8,002,824	B2	8/2011	Jenson et al.
8,002,825	B2	8/2011	Letac et al.
8,012,198	B2	9/2011	Hill et al.
8,021,421	B2	9/2011	Fogarty et al.
RE42,818	E	10/2011	Cali et al.
RE42,857	E	10/2011	Cali et al.
8,038,704	B2	10/2011	Sherburne
8,038,709	B2	10/2011	Palasis et al.
8,043,450	B2	10/2011	Cali et al.
8,048,153	B2	11/2011	Salahieh et al.
8,052,715	B2	11/2011	Quinn et al.
8,052,749	B2	11/2011	Salahieh et al.
8,052,750	B2	11/2011	Tuval et al.
8,057,540	B2	11/2011	Letac et al.
8,062,355	B2	11/2011	Figulla et al.
8,062,536	B2	11/2011	Liu et al.
8,062,537	B2	11/2011	Tuominen et al.
8,062,749	B2	11/2011	Shelestak et al.
8,070,799	B2	12/2011	Righini et al.
8,075,641	B2	12/2011	Aravanis et al.
8,083,788	B2	12/2011	Acosta et al.
8,092,518	B2	1/2012	Schreck
8,092,520	B2	1/2012	Quadri
8,092,521	B2	1/2012	Figulla et al.
8,128,676	B2	3/2012	Cummings
8,128,681	B2	3/2012	Shoemaker et al.
8,133,217	B2	3/2012	Stokes et al.
8,133,270	B2	3/2012	Kheradvar et al.
8,136,659	B2	3/2012	Salahieh et al.
8,137,394	B2	3/2012	Stocker et al.
8,137,398	B2	3/2012	Tuval et al.
8,147,534	B2	4/2012	Berez et al.
8,157,853	B2	4/2012	Laske et al.
8,167,894	B2	5/2012	Miles et al.
8,172,896	B2	5/2012	McNamara et al.
8,182,528	B2	5/2012	Salahieh et al.
8,192,351	B2	6/2012	Fishler et al.
8,206,437	B2	6/2012	Bonhoeffer et al.
8,211,107	B2	7/2012	Parks et al.
8,216,174	B2	7/2012	Wilk et al.
8,216,301	B2	7/2012	Bonhoeffer et al.
8,221,493	B2	7/2012	Boyle et al.
8,226,707	B2	7/2012	White
8,226,710	B2	7/2012	Nguyen et al.
8,231,670	B2	7/2012	Salahieh et al.
8,236,049	B2	8/2012	Rowe et al.
8,236,241	B2	8/2012	Carpentier et al.
8,246,675	B2	8/2012	Zegdi
8,246,678	B2	8/2012	Salahieh et al.
8,252,051	B2	8/2012	Chau et al.
8,252,052	B2	8/2012	Salahieh et al.
8,277,500	B2	10/2012	Schmid et al.
8,287,584	B2	10/2012	Salahieh et al.
8,303,653	B2	11/2012	Bonhoeffer et al.
8,308,798	B2	11/2012	Pintor et al.
8,317,858	B2	11/2012	Straubinger et al.
8,323,335	B2	12/2012	Rowe et al.
8,328,868	B2	12/2012	Paul et al.
8,343,136	B2	1/2013	Howat et al.
8,343,213	B2	1/2013	Salahieh et al.
8,348,995	B2	1/2013	Tuval et al.
8,348,996	B2	1/2013	Tuval et al.
8,348,999	B2	1/2013	Kheradvar et al.
8,357,387	B2	1/2013	Dove et al.
8,366,767	B2	2/2013	Zhang
8,372,134	B2	2/2013	Schlick et al.
8,376,865	B2	2/2013	Forster et al.
8,377,117	B2	2/2013	Keidar et al.
8,382,822	B2	2/2013	Pavcnik et al.
8,398,704	B2	3/2013	Straubinger et al.
8,398,708	B2	3/2013	Meiri et al.
8,403,983	B2	3/2013	Quadri et al.
8,414,641	B2	4/2013	Stocker et al.
8,414,643	B2	4/2013	Tuval et al.
8,414,644	B2	4/2013	Quadri et al.
8,414,645	B2	4/2013	Dwork et al.
8,439,961	B2	5/2013	Jagger et al.
8,445,278	B2	5/2013	Everaerts et al.
8,460,365	B2	6/2013	Haverkost et al.
8,465,540	B2	6/2013	Straubinger et al.
8,468,667	B2	6/2013	Straubinger et al.
8,470,023	B2	6/2013	Eidenschink et al.
8,491,650	B2	7/2013	Wiemeyer et al.
8,512,394	B2	8/2013	Schmid et al.
8,512,399	B2	8/2013	Lafontaine
8,512,400	B2	8/2013	Tran et al.
8,512,401	B2	8/2013	Murray, III et al.
8,523,936	B2	9/2013	Schmid et al.
8,535,368	B2	9/2013	Headley, Jr. et al.
8,540,762	B2	9/2013	Schmid et al.
8,545,547	B2	10/2013	Schmid et al.
8,545,552	B2	10/2013	Garrison et al.
8,551,160	B2	10/2013	Figulla et al.
8,556,880	B2	10/2013	Freyman et al.
8,556,966	B2	10/2013	Jenson
8,568,475	B2	10/2013	Nguyen et al.
8,579,936	B2	11/2013	Abbott et al.
8,579,962	B2	11/2013	Salahieh et al.
8,579,965	B2	11/2013	Bonhoeffer et al.
8,585,756	B2	11/2013	Bonhoeffer et al.
8,585,759	B2	11/2013	Bumbalough
8,591,570	B2	11/2013	Revuelta et al.
8,597,226	B2	12/2013	Wilk et al.
8,603,159	B2	12/2013	Seguin et al.
8,603,160	B2	12/2013	Salahieh et al.
8,617,235	B2	12/2013	Schmid et al.
8,617,236	B2	12/2013	Paul et al.
8,623,074	B2	1/2014	Ryan
8,623,075	B2	1/2014	Murray, III et al.
8,623,076	B2	1/2014	Salahieh et al.
8,623,078	B2	1/2014	Salahieh et al.
8,628,562	B2	1/2014	Cummings
8,628,571	B1	1/2014	Hacohen et al.
8,647,381	B2	2/2014	Essinger et al.
8,668,733	B2	3/2014	Haug et al.
8,672,997	B2	3/2014	Drasler et al.
8,679,174	B2	3/2014	Ottma et al.
8,685,077	B2	4/2014	Laske et al.
8,696,743	B2	4/2014	Holecek et al.
8,721,713	B2	5/2014	Tower et al.
8,721,717	B2	5/2014	Shoemaker et al.
8,734,508	B2	5/2014	Hastings et al.
8,758,430	B2	6/2014	Ferrari et al.
8,764,818	B2	7/2014	Gregg
8,778,020	B2	7/2014	Gregg et al.
8,790,395	B2	7/2014	Straubinger et al.
8,795,305	B2	8/2014	Martin et al.
8,795,356	B2	8/2014	Quadri et al.
8,808,356	B2	8/2014	Braido et al.
8,808,364	B2	8/2014	Palasis et al.
RE45,130	E	9/2014	Figulla et al.
8,828,078	B2	9/2014	Salahieh et al.
8,828,079	B2	9/2014	Thielen et al.
8,840,662	B2	9/2014	Salahieh et al.
8,840,663	B2	9/2014	Salahieh et al.
8,845,721	B2	9/2014	Braido et al.
8,851,286	B2	10/2014	Chang et al.
8,852,272	B2	10/2014	Gross et al.
8,858,620	B2	10/2014	Salahieh et al.
8,894,703	B2	11/2014	Salahieh et al.
8,932,349	B2	1/2015	Jenson et al.
8,940,014	B2	1/2015	Gamarra et al.

(56) **References Cited**

U.S. PATENT DOCUMENTS

8,951,243	B2	2/2015	Crisostomo et al.
8,951,299	B2	2/2015	Paul et al.
8,956,383	B2	2/2015	Aklog et al.
8,992,608	B2	3/2015	Haug et al.
8,998,976	B2	4/2015	Gregg et al.
9,005,273	B2	4/2015	Salahieh et al.
9,011,521	B2	4/2015	Haug et al.
9,023,099	B2	5/2015	Duffy et al.
9,028,542	B2	5/2015	Hill et al.
9,039,756	B2	5/2015	White
9,044,318	B2	6/2015	Straubinger et al.
9,131,926	B2	9/2015	Crisostomo et al.
9,138,315	B2	9/2015	Straubinger et al.
9,149,358	B2	10/2015	Tabor et al.
9,168,130	B2	10/2015	Straubinger et al.
9,168,131	B2	10/2015	Yohanan et al.
9,168,136	B2	10/2015	Yang et al.
RE45,790	E	11/2015	Figulla et al.
9,180,005	B1	11/2015	Lashinski et al.
9,186,482	B2	11/2015	Dorn
9,211,266	B2	12/2015	Iwazawa et al.
9,216,082	B2	12/2015	Von Segesser et al.
9,248,037	B2	2/2016	Roeder et al.
9,265,608	B2	2/2016	Miller et al.
9,277,991	B2	3/2016	Salahieh et al.
9,277,993	B2	3/2016	Gamarra et al.
9,295,551	B2	3/2016	Straubinger et al.
9,301,840	B2	4/2016	Nguyen et al.
9,301,843	B2	4/2016	Richardson et al.
9,308,085	B2	4/2016	Salahieh et al.
9,320,599	B2	4/2016	Salahieh et al.
9,326,853	B2	5/2016	Olson et al.
9,358,106	B2	6/2016	Salahieh et al.
9,358,110	B2	6/2016	Paul et al.
9,370,419	B2	6/2016	Hill et al.
9,370,421	B2	6/2016	Crisostomo et al.
9,387,076	B2	7/2016	Paul et al.
9,393,094	B2	7/2016	Salahieh et al.
9,393,113	B2	7/2016	Salahieh et al.
9,393,114	B2	7/2016	Sutton et al.
9,393,115	B2	7/2016	Tabor et al.
9,415,567	B2	8/2016	Sogard et al.
9,421,083	B2	8/2016	Eidenschink et al.
9,439,759	B2	9/2016	Straubinger et al.
9,463,084	B2	10/2016	Stinson
9,474,598	B2	10/2016	Gregg et al.
9,474,609	B2	10/2016	Haverkost et al.
9,492,276	B2	11/2016	Lee et al.
9,510,945	B2	12/2016	Sutton et al.
9,510,947	B2	12/2016	Straubinger et al.
9,526,609	B2	12/2016	Salahieh et al.
9,532,872	B2	1/2017	Salahieh et al.
9,539,091	B2	1/2017	Yang et al.
9,554,924	B2	1/2017	Schlick et al.
9,597,432	B2	3/2017	Nakamura
9,649,212	B2	5/2017	Fargahi
9,717,593	B2	8/2017	Alkhatib et al.
9,744,031	B2	8/2017	Girard et al.
D800,908	S	10/2017	Hariton et al.
9,775,709	B2	10/2017	Miller et al.
9,788,945	B2	10/2017	Ottma et al.
9,861,476	B2	1/2018	Salahieh et al.
9,867,694	B2	1/2018	Girard et al.
9,867,699	B2	1/2018	Straubinger et al.
9,872,768	B2	1/2018	Paul et al.
9,878,127	B2	1/2018	Damm et al.
9,889,002	B2	2/2018	Bonhoeffer et al.
9,901,445	B2	2/2018	Backus et al.
9,949,824	B2	4/2018	Bonhoeffer et al.
9,956,075	B2	5/2018	Salahieh et al.
9,968,761	B2	5/2018	Brecker
9,987,133	B2	6/2018	Straubinger et al.
10,092,324	B2	10/2018	Gillespie et al.
10,143,552	B2	12/2018	Wallace et al.
10,154,901	B2	12/2018	Straubinger et al.
10,321,987	B2	6/2019	Wang et al.
10,363,134	B2	7/2019	Figulla et al.
10,543,084	B2	1/2020	Guyenot et al.
10,575,947	B2	3/2020	Straubinger et al.
10,638,918	B2	5/2020	Atarot et al.
10,702,382	B2	7/2020	Straubinger et al.
10,709,555	B2	7/2020	Schreck et al.
10,856,978	B2	12/2020	Straubinger et al.
10,856,987	B2	12/2020	Cabiri et al.
11,065,138	B2	7/2021	Schreck et al.
11,147,669	B2 *	10/2021	Straubinger A61F 2/966
11,154,398	B2	10/2021	Straubinger et al.
11,185,405	B2	11/2021	Girard et al.
11,197,754	B2	12/2021	Saffari et al.
11,266,497	B2	3/2022	Cao et al.
11,911,264	B2	2/2024	Chau et al.
11,951,005	B2	4/2024	Gross et al.
12,121,461	B2	10/2024	Schreck et al.
12,171,658	B2	12/2024	Chu et al.
12,232,957	B2	2/2025	Straubinger et al.
2001/0000041	A1	3/2001	Selmon et al.
2001/0001314	A1	5/2001	Davison et al.
2001/0002445	A1	5/2001	Vesely
2001/0004683	A1	6/2001	Gambale et al.
2001/0004690	A1	6/2001	Gambale et al.
2001/0004699	A1	6/2001	Gittings et al.
2001/0007956	A1	7/2001	Letac et al.
2001/0008969	A1	7/2001	Evans et al.
2001/0010017	A1	7/2001	Letac et al.
2001/0011187	A1	8/2001	Pavcnik et al.
2001/0011189	A1	8/2001	Drasler et al.
2001/0012948	A1	8/2001	Vanney
2001/0014813	A1	8/2001	Saadat et al.
2001/0016700	A1	8/2001	Eno et al.
2001/0018596	A1	8/2001	Selmon et al.
2001/0020172	A1	9/2001	Selmon et al.
2001/0021872	A1	9/2001	Bailey et al.
2001/0025196	A1	9/2001	Chinn et al.
2001/0025643	A1	10/2001	Foley
2001/0027287	A1	10/2001	Shmulewitz et al.
2001/0027338	A1	10/2001	Greenberg
2001/0027339	A1	10/2001	Boatman et al.
2001/0029385	A1	10/2001	Shennib et al.
2001/0032013	A1	10/2001	Marton
2001/0034547	A1	10/2001	Hall et al.
2001/0037117	A1	11/2001	Gambale et al.
2001/0037141	A1	11/2001	Yee et al.
2001/0037149	A1	11/2001	Wilk
2001/0039426	A1	11/2001	Makower et al.
2001/0039445	A1	11/2001	Hall et al.
2001/0039450	A1	11/2001	Pavcnik et al.
2001/0041902	A1	11/2001	Lepulu et al.
2001/0041928	A1	11/2001	Pavcnik et al.
2001/0041930	A1	11/2001	Globerman et al.
2001/0044631	A1	11/2001	Akin et al.
2001/0044634	A1	11/2001	Don Michael et al.
2001/0044647	A1	11/2001	Pinchuk et al.
2001/0044652	A1	11/2001	Moore
2001/0044656	A1	11/2001	Williamson, IV et al.
2001/0047165	A1	11/2001	Makower et al.
2001/0049523	A1	12/2001	DeVore et al.
2001/0051822	A1	12/2001	Stack et al.
2001/0053930	A1	12/2001	Kugler et al.
2001/0053932	A1	12/2001	Phelps et al.
2002/0002349	A1	1/2002	Flaherty et al.
2002/0002396	A1	1/2002	Fulkerson
2002/0002401	A1	1/2002	McGuckin, Jr. et al.
2002/0004662	A1	1/2002	Wilk
2002/0004663	A1	1/2002	Gittings et al.
2002/0007138	A1	1/2002	Wilk et al.
2002/0010489	A1	1/2002	Grayzel et al.
2002/0010508	A1	1/2002	Chobotov
2002/0026233	A1	2/2002	Shaknovich
2002/0029014	A1	3/2002	Jayaraman
2002/0029079	A1	3/2002	Kim et al.
2002/0029981	A1	3/2002	Nigam
2002/0032476	A1	3/2002	Gambale et al.
2002/0032478	A1	3/2002	Boekstegers et al.
2002/0032480	A1	3/2002	Spence et al.

(56) **References Cited**

U.S. PATENT DOCUMENTS

2002/0032481 A1 3/2002 Gabbay
2002/0035390 A1 3/2002 Schaldach et al.
2002/0035396 A1 3/2002 Heath
2002/0042650 A1 4/2002 Vardi et al.
2002/0042651 A1 4/2002 Liddicoat et al.
2002/0045846 A1 4/2002 Kaplon et al.
2002/0045928 A1 4/2002 Boekstegers
2002/0045929 A1 4/2002 Diaz
2002/0049486 A1 4/2002 Knudson et al.
2002/0052651 A1 5/2002 Myers et al.
2002/0055767 A1 5/2002 Forde et al.
2002/0055769 A1 5/2002 Wang
2002/0055772 A1 5/2002 McGuckin, Jr. et al.
2002/0055774 A1 5/2002 Liddicoat
2002/0055775 A1 5/2002 Carpentier et al.
2002/0058897 A1 5/2002 Renati
2002/0058987 A1 5/2002 Butaric et al.
2002/0058993 A1 5/2002 Landau et al.
2002/0058995 A1 5/2002 Stevens
2002/0062146 A1 5/2002 Makower et al.
2002/0065478 A1 5/2002 Knudson et al.
2002/0065485 A1 5/2002 DuBois et al.
2002/0072699 A1 6/2002 Knudson et al.
2002/0072789 A1 6/2002 Hackett et al.
2002/0077566 A1 6/2002 Laroya et al.
2002/0077654 A1 6/2002 Javier, Jr. et al.
2002/0077696 A1 6/2002 Zadno-Azizi et al.
2002/0082584 A1 6/2002 Rosenman et al.
2002/0082609 A1 6/2002 Green
2002/0092535 A1 7/2002 Wilk
2002/0092536 A1 7/2002 LaFontaine et al.
2002/0095111 A1 7/2002 Tweden et al.
2002/0095173 A1 7/2002 Mazzocchi et al.
2002/0095206 A1 7/2002 Addonizio et al.
2002/0095209 A1 7/2002 Zadno-Azizi et al.
2002/0099405 A1 7/2002 Yurek et al.
2002/0099439 A1 7/2002 Schwartz et al.
2002/0100484 A1 8/2002 Hall et al.
2002/0103533 A1 8/2002 Langberg et al.
2002/0107565 A1 8/2002 Greenhalgh
2002/0111627 A1 8/2002 Vincent-Prestigiacomo
2002/0111665 A1 8/2002 Lauterjung
2002/0111668 A1 8/2002 Smith
2002/0111672 A1 8/2002 Kim et al.
2002/0111674 A1 8/2002 Chouinard et al.
2002/0117789 A1 8/2002 Childers et al.
2002/0120322 A1 8/2002 Thompson et al.
2002/0120323 A1 8/2002 Thompson et al.
2002/0120328 A1 8/2002 Pathak et al.
2002/0123698 A1 9/2002 Garibotto et al.
2002/0123786 A1 9/2002 Gittings et al.
2002/0123790 A1 9/2002 White et al.
2002/0123802 A1 9/2002 Snyders
2002/0128552 A1 9/2002 Nowlin et al.
2002/0133183 A1 9/2002 Lentz et al.
2002/0133226 A1 9/2002 Marquez et al.
2002/0138087 A1 9/2002 Shennib et al.
2002/0138138 A1 9/2002 Yang
2002/0143285 A1 10/2002 Eno et al.
2002/0143289 A1 10/2002 Ellis et al.
2002/0143387 A1 10/2002 Soetikno et al.
2002/0144696 A1 10/2002 Sharkawy et al.
2002/0151913 A1 10/2002 Berg et al.
2002/0151970 A1 10/2002 Garrison et al.
2002/0156522 A1 10/2002 Ivancev et al.
2002/0161377 A1 10/2002 Rabkin
2002/0161383 A1 10/2002 Akin et al.
2002/0161390 A1 10/2002 Mouw
2002/0161392 A1 10/2002 Dubrul
2002/0161394 A1 10/2002 Macoviak et al.
2002/0161424 A1 10/2002 Rapacki et al.
2002/0161426 A1 10/2002 Iancea
2002/0165479 A1 11/2002 Wilk
2002/0165576 A1 11/2002 Boyle et al.
2002/0165606 A1 11/2002 Wolf et al.
2002/0173842 A1 11/2002 Buchanan
2002/0177766 A1 11/2002 Mogul
2002/0177772 A1 11/2002 Altman et al.
2002/0177840 A1 11/2002 Farnholtz
2002/0177894 A1 11/2002 Acosta et al.
2002/0179098 A1 12/2002 Makower et al.
2002/0183716 A1 12/2002 Herweck et al.
2002/0183781 A1 12/2002 Casey et al.
2002/0186558 A1 12/2002 Plank et al.
2002/0188341 A1 12/2002 Elliott
2002/0188344 A1 12/2002 Bolea et al.
2002/0193782 A1 12/2002 Ellis et al.
2002/0193871 A1 12/2002 Beyersdorf et al.
2002/0198594 A1 12/2002 Schreck
2003/0004541 A1 1/2003 Linder et al.
2003/0004560 A1 1/2003 Chobotov et al.
2003/0009189 A1 1/2003 Gilson et al.
2003/0014104 A1 1/2003 Cribier
2003/0018377 A1 1/2003 Berg et al.
2003/0018379 A1 1/2003 Knudson et al.
2003/0023300 A1 1/2003 Bailey et al.
2003/0023303 A1 1/2003 Palmaz et al.
2003/0027332 A1 2/2003 Lafrance et al.
2003/0028213 A1 2/2003 Thill et al.
2003/0028247 A1 2/2003 Cali
2003/0033001 A1 2/2003 Igaki
2003/0036791 A1 2/2003 Philipp et al.
2003/0036795 A1 2/2003 Andersen et al.
2003/0040736 A1 2/2003 Stevens et al.
2003/0040771 A1 2/2003 Hyodoh et al.
2003/0040772 A1 2/2003 Hyodoh et al.
2003/0040791 A1 2/2003 Oktay
2003/0040792 A1 2/2003 Gabbay
2003/0042186 A1 3/2003 Boyle
2003/0044315 A1 3/2003 Boekstegers
2003/0045828 A1 3/2003 Wilk
2003/0050694 A1 3/2003 Yang et al.
2003/0055371 A1 3/2003 Wolf et al.
2003/0055495 A1 3/2003 Pease et al.
2003/0057156 A1 3/2003 Peterson et al.
2003/0060844 A1 3/2003 Borillo et al.
2003/0065386 A1 4/2003 Weadock
2003/0069492 A1 4/2003 Abrams et al.
2003/0069646 A1 4/2003 Stinson
2003/0070944 A1 4/2003 Nigam
2003/0073973 A1 4/2003 Evans et al.
2003/0074058 A1 4/2003 Sherry
2003/0078561 A1 4/2003 Gambale et al.
2003/0078652 A1 4/2003 Sutherland
2003/0083730 A1 5/2003 Stinson
2003/0093145 A1 5/2003 Lawrence-Brown et al.
2003/0100918 A1 5/2003 Duane
2003/0100919 A1 5/2003 Hopkins et al.
2003/0100920 A1 5/2003 Akin et al.
2003/0105514 A1 6/2003 Phelps et al.
2003/0109924 A1 6/2003 Cribier
2003/0109930 A1 6/2003 Bluni et al.
2003/0114912 A1 6/2003 Sequin et al.
2003/0114913 A1 6/2003 Spenser et al.
2003/0120195 A1 6/2003 Milo et al.
2003/0125795 A1 7/2003 Pavcnik et al.
2003/0130726 A1 7/2003 Thorpe et al.
2003/0130727 A1 7/2003 Drasler et al.
2003/0130729 A1 7/2003 Paniagua et al.
2003/0130746 A1 7/2003 Ashworth et al.
2003/0135257 A1 7/2003 Taheri
2003/0139796 A1 7/2003 Sequin et al.
2003/0139798 A1 7/2003 Brown et al.
2003/0139803 A1 7/2003 Sequin et al.
2003/0139804 A1 7/2003 Hankh et al.
2003/0144657 A1 7/2003 Bowe et al.
2003/0144732 A1 7/2003 Cosgrove et al.
2003/0149474 A1 8/2003 Becker
2003/0149475 A1 8/2003 Hyodoh et al.
2003/0149476 A1 8/2003 Damm et al.
2003/0149477 A1 8/2003 Gabbay
2003/0149478 A1 8/2003 Figulla et al.
2003/0153971 A1 8/2003 Chandrasekaran
2003/0153974 A1 8/2003 Spenser et al.

(56) **References Cited**

U.S. PATENT DOCUMENTS

2003/0158573 A1 8/2003 Gittings et al.
2003/0158595 A1 8/2003 Randall et al.
2003/0163193 A1 8/2003 Widenhouse
2003/0163198 A1 8/2003 Morra et al.
2003/0165352 A1 9/2003 Ibrahim et al.
2003/0171803 A1 9/2003 Shimon
2003/0171805 A1 9/2003 Berg et al.
2003/0176884 A1 9/2003 Berrada et al.
2003/0181850 A1 9/2003 Diamond et al.
2003/0181938 A1 9/2003 Roth et al.
2003/0181942 A1 9/2003 Sutton et al.
2003/0187495 A1 10/2003 Cully et al.
2003/0191449 A1 10/2003 Nash et al.
2003/0191516 A1 10/2003 Weldon et al.
2003/0191519 A1 10/2003 Lombardi et al.
2003/0191526 A1 10/2003 Van Tassel et al.
2003/0195457 A1 10/2003 LaFontaine et al.
2003/0195458 A1 10/2003 Phelps et al.
2003/0195609 A1 10/2003 Berenstein et al.
2003/0195620 A1 10/2003 Huynh et al.
2003/0198722 A1 10/2003 Johnston, Jr. et al.
2003/0199759 A1 10/2003 Richard
2003/0199913 A1 10/2003 Dubrul et al.
2003/0199963 A1 10/2003 Tower et al.
2003/0199971 A1 10/2003 Tower et al.
2003/0199972 A1 10/2003 Zadno-Azizi et al.
2003/0204160 A1 10/2003 Kamm et al.
2003/0204249 A1 10/2003 Letort
2003/0208224 A1 11/2003 Broome
2003/0212410 A1 11/2003 Stenzel et al.
2003/0212413 A1 11/2003 Wilk
2003/0212429 A1 11/2003 Keegan et al.
2003/0212452 A1 11/2003 Zadno-Azizi et al.
2003/0212454 A1 11/2003 Scott et al.
2003/0216678 A1 11/2003 March et al.
2003/0216679 A1 11/2003 Wolf et al.
2003/0216774 A1 11/2003 Larson
2003/0220661 A1 11/2003 Mowry et al.
2003/0220667 A1 11/2003 Van Der Burg et al.
2003/0225445 A1 12/2003 Derus et al.
2003/0229366 A1 12/2003 Reggie et al.
2003/0229390 A1 12/2003 Ashton et al.
2003/0233117 A1 12/2003 Adams et al.
2003/0236542 A1 12/2003 Makower
2003/0236567 A1 12/2003 Elliot
2003/0236568 A1 12/2003 Hojeibane et al.
2003/0236570 A1 12/2003 Cook et al.
2004/0004926 A1 1/2004 Maeda
2004/0006298 A1 1/2004 Wilk
2004/0006380 A1 1/2004 Buck et al.
2004/0015225 A1 1/2004 Kim et al.
2004/0015228 A1 1/2004 Lombardi et al.
2004/0018651 A1 1/2004 Nadeau
2004/0019348 A1 1/2004 Stevens et al.
2004/0019374 A1 1/2004 Hojeibane et al.
2004/0026389 A1 2/2004 Kessler et al.
2004/0033364 A1 2/2004 Spiridigliozzi et al.
2004/0034411 A1 2/2004 Quijano et al.
2004/0037946 A1 2/2004 Morra et al.
2004/0039343 A1 2/2004 Eppstein et al.
2004/0039436 A1 2/2004 Spenser et al.
2004/0044350 A1 3/2004 Martin et al.
2004/0044361 A1 3/2004 Frazier et al.
2004/0044392 A1 3/2004 Von Oepen
2004/0044400 A1 3/2004 Cheng et al.
2004/0044402 A1 3/2004 Jung et al.
2004/0049204 A1 3/2004 Harari et al.
2004/0049207 A1 3/2004 Goldfarb et al.
2004/0049224 A1 3/2004 Buehlmann et al.
2004/0049226 A1 3/2004 Keegan et al.
2004/0049262 A1 3/2004 Obermiller et al.
2004/0049266 A1 3/2004 Anduiza et al.
2004/0058097 A1 3/2004 Weder
2004/0059280 A1 3/2004 Makower et al.
2004/0059407 A1 3/2004 Escamilla et al.
2004/0059409 A1 3/2004 Stenzel
2004/0059429 A1 3/2004 Amin et al.
2004/0073157 A1 4/2004 Knudson et al.
2004/0073198 A1 4/2004 Gilson et al.
2004/0073238 A1 4/2004 Makower
2004/0073289 A1 4/2004 Hartley
2004/0077987 A1 4/2004 Rapacki et al.
2004/0077988 A1 4/2004 Tweden et al.
2004/0077990 A1 4/2004 Knudson et al.
2004/0078950 A1 4/2004 Schreck
2004/0082904 A1 4/2004 Houde et al.
2004/0082967 A1 4/2004 Broome et al.
2004/0082989 A1 4/2004 Cook et al.
2004/0087982 A1 5/2004 Eskuri
2004/0088042 A1 5/2004 Kim et al.
2004/0088045 A1 5/2004 Cox
2004/0092858 A1 5/2004 Wilson et al.
2004/0092989 A1 5/2004 Wilson et al.
2004/0093005 A1 5/2004 Durcan
2004/0093016 A1 5/2004 Root et al.
2004/0093060 A1 5/2004 Seguin et al.
2004/0093063 A1 5/2004 Wright et al.
2004/0093070 A1 5/2004 Hojeibane et al.
2004/0093075 A1 5/2004 Kuehne
2004/0097788 A1 5/2004 Mourlas et al.
2004/0098022 A1 5/2004 Barone
2004/0098098 A1 5/2004 McGuckin, Jr. et al.
2004/0098099 A1 5/2004 McCullagh et al.
2004/0098112 A1 5/2004 DiMatteo et al.
2004/0102855 A1 5/2004 Shank
2004/0106931 A1 6/2004 Guiles et al.
2004/0106976 A1 6/2004 Bailey et al.
2004/0106990 A1 6/2004 Spence et al.
2004/0107004 A1 6/2004 Levine et al.
2004/0111096 A1 6/2004 Tu et al.
2004/0113306 A1 6/2004 Rapacki et al.
2004/0116951 A1 6/2004 Rosengart
2004/0116999 A1 6/2004 Ledergerber
2004/0117004 A1 6/2004 Osborne et al.
2004/0117009 A1 6/2004 Cali et al.
2004/0118415 A1 6/2004 Hall et al.
2004/0122318 A1 6/2004 Flaherty et al.
2004/0122347 A1 6/2004 Knudson et al.
2004/0122468 A1 6/2004 Yodfat et al.
2004/0122514 A1 6/2004 Fogarty et al.
2004/0122516 A1 6/2004 Fogarty et al.
2004/0127847 A1 7/2004 DuBois et al.
2004/0127912 A1 7/2004 Rabkin et al.
2004/0127936 A1 7/2004 Salahieh et al.
2004/0127979 A1 7/2004 Wilson et al.
2004/0127982 A1 7/2004 Machold et al.
2004/0133154 A1 7/2004 Flaherty et al.
2004/0133225 A1 7/2004 Makower
2004/0133274 A1 7/2004 Webler et al.
2004/0138694 A1 7/2004 Tran et al.
2004/0138742 A1 7/2004 Myers et al.
2004/0138743 A1 7/2004 Myers et al.
2004/0138745 A1 7/2004 Macoviak et al.
2004/0147868 A1 7/2004 Bardsley et al.
2004/0147869 A1 7/2004 Wolf et al.
2004/0148018 A1 7/2004 Carpentier et al.
2004/0148021 A1 7/2004 Cartledge et al.
2004/0153094 A1 8/2004 Dunfee et al.
2004/0153145 A1 8/2004 Simionescu et al.
2004/0153146 A1 8/2004 Lashinski et al.
2004/0158143 A1 8/2004 Flaherty et al.
2004/0158277 A1 8/2004 Lowe et al.
2004/0163094 A1 8/2004 Matsui et al.
2004/0167444 A1 8/2004 Laroya et al.
2004/0167565 A1 8/2004 Beulke et al.
2004/0167573 A1 8/2004 Williamson, IV et al.
2004/0167620 A1 8/2004 Ortiz et al.
2004/0168691 A1 9/2004 Sharkawy et al.
2004/0176791 A1 9/2004 Lim et al.
2004/0181140 A1 9/2004 Falwell et al.
2004/0186507 A1 9/2004 Hall et al.
2004/0186557 A1 9/2004 Gambale et al.
2004/0186558 A1 9/2004 Pavcnik et al.
2004/0186563 A1 9/2004 Lobbi

(56) **References Cited**

U.S. PATENT DOCUMENTS

2004/0186565 A1 9/2004 Schreck
2004/0186587 A1 9/2004 Ahern
2004/0193180 A1 9/2004 Buzzard et al.
2004/0193244 A1 9/2004 Hartley et al.
2004/0193252 A1 9/2004 Perez et al.
2004/0193261 A1 9/2004 Berreklouw
2004/0197695 A1 10/2004 Aono
2004/0199245 A1 10/2004 Lauterjung
2004/0204683 A1 10/2004 McGuckin, Jr. et al.
2004/0204755 A1 10/2004 Robin
2004/0206363 A1 10/2004 McCarthy et al.
2004/0210104 A1 10/2004 Lau et al.
2004/0210190 A1 10/2004 Kohler et al.
2004/0210240 A1 10/2004 Saint
2004/0210301 A1 10/2004 Obermiller
2004/0210304 A1 10/2004 Seguin et al.
2004/0210306 A1 10/2004 Quijano et al.
2004/0210307 A1 10/2004 Khairkhahan
2004/0215317 A1 10/2004 Cummings
2004/0215331 A1 10/2004 Chew et al.
2004/0215333 A1 10/2004 Duran et al.
2004/0215339 A1 10/2004 Drasler et al.
2004/0219180 A1 11/2004 Gambale et al.
2004/0220598 A1 11/2004 Bolduc et al.
2004/0220655 A1 11/2004 Swanson et al.
2004/0225321 A1 11/2004 Krolik et al.
2004/0225353 A1 11/2004 McGuckin, Jr. et al.
2004/0225354 A1 11/2004 Allen et al.
2004/0225355 A1 11/2004 Stevens
2004/0236411 A1 11/2004 Sarac et al.
2004/0236418 A1 11/2004 Stevens
2004/0243143 A1 12/2004 Corcoran et al.
2004/0243221 A1 12/2004 Fawzi et al.
2004/0249343 A1 12/2004 Cioanta
2004/0254594 A1 12/2004 Alfaro
2004/0254636 A1 12/2004 Flagle et al.
2004/0260389 A1 12/2004 Case et al.
2004/0260390 A1 12/2004 Sarac et al.
2004/0260393 A1 12/2004 Rahdert et al.
2004/0260394 A1 12/2004 Douk et al.
2004/0267357 A1 12/2004 Allen et al.
2005/0000858 A1 1/2005 Roovers
2005/0004505 A1 1/2005 Phelps et al.
2005/0004558 A1 1/2005 Gambale et al.
2005/0004648 A1 1/2005 Boekstegers
2005/0008589 A1 1/2005 Legrand et al.
2005/0009000 A1 1/2005 Wilhelm et al.
2005/0010246 A1 1/2005 Streeter et al.
2005/0010285 A1 1/2005 Lambrecht et al.
2005/0010287 A1 1/2005 Macoviak et al.
2005/0015112 A1 1/2005 Cohn et al.
2005/0021136 A1 1/2005 Xie et al.
2005/0025857 A1 2/2005 Schoenherr et al.
2005/0027305 A1 2/2005 Shiu et al.
2005/0027348 A1 2/2005 Case et al.
2005/0033220 A1 2/2005 Wilk et al.
2005/0033398 A1 2/2005 Seguin
2005/0033402 A1 2/2005 Cully et al.
2005/0038495 A1 2/2005 Greenan
2005/0038509 A1 2/2005 Ashe
2005/0043585 A1 2/2005 Datta et al.
2005/0043711 A1 2/2005 Corcoran et al.
2005/0043757 A1 2/2005 Arad et al.
2005/0043759 A1 2/2005 Chanduszko
2005/0043760 A1 2/2005 Fogarty et al.
2005/0043781 A1 2/2005 Foley
2005/0043790 A1 2/2005 Seguin
2005/0049674 A1 3/2005 Berra et al.
2005/0049692 A1 3/2005 Numamoto et al.
2005/0049696 A1 3/2005 Siess et al.
2005/0055088 A1 3/2005 Liddicoat et al.
2005/0060016 A1 3/2005 Wu et al.
2005/0060018 A1 3/2005 Dittman
2005/0060029 A1 3/2005 Le et al.
2005/0060030 A1 3/2005 Lashinski et al.
2005/0065594 A1 3/2005 DiMatteo et al.
2005/0070794 A1 3/2005 Deal et al.
2005/0070957 A1 3/2005 Das
2005/0075584 A1 4/2005 Cali
2005/0075662 A1 4/2005 Pedersen et al.
2005/0075712 A1 4/2005 Biancucci et al.
2005/0075717 A1 4/2005 Nguyen et al.
2005/0075719 A1 4/2005 Bergheim
2005/0075720 A1 4/2005 Nguyen et al.
2005/0075724 A1 4/2005 Svanidze et al.
2005/0075725 A1 4/2005 Rowe
2005/0075726 A1 4/2005 Svanidze et al.
2005/0075727 A1 4/2005 Wheatley
2005/0075730 A1 4/2005 Myers et al.
2005/0075731 A1 4/2005 Artof et al.
2005/0075776 A1 4/2005 Cho
2005/0084595 A1 4/2005 Shukla et al.
2005/0085841 A1 4/2005 Eversull et al.
2005/0085842 A1 4/2005 Eversull et al.
2005/0085843 A1 4/2005 Opolski et al.
2005/0085890 A1 4/2005 Rasmussen et al.
2005/0085900 A1 4/2005 Case et al.
2005/0090846 A1 4/2005 Pedersen et al.
2005/0090890 A1 4/2005 Wu et al.
2005/0096568 A1 5/2005 Kato
2005/0096692 A1 5/2005 Linder et al.
2005/0096724 A1 5/2005 Stenzel et al.
2005/0096726 A1 5/2005 Sequin et al.
2005/0096734 A1 5/2005 Majercak et al.
2005/0096735 A1 5/2005 Hojeibane et al.
2005/0096736 A1 5/2005 Osse et al.
2005/0096738 A1 5/2005 Cali et al.
2005/0096768 A1 5/2005 Huang et al.
2005/0098547 A1 5/2005 Cali et al.
2005/0100580 A1 5/2005 Osborne et al.
2005/0101903 A1 5/2005 Kohler et al.
2005/0101904 A1 5/2005 Wilk
2005/0101968 A1 5/2005 Dadourian
2005/0102020 A1 5/2005 Grayzel et al.
2005/0107822 A1 5/2005 Wasdyke
2005/0107871 A1 5/2005 Realyvasquez et al.
2005/0113902 A1 5/2005 Geiser et al.
2005/0113904 A1 5/2005 Shank et al.
2005/0113910 A1 5/2005 Paniagua et al.
2005/0119688 A1 6/2005 Bergheim
2005/0119728 A1 6/2005 Sarac
2005/0119736 A1 6/2005 Zilla et al.
2005/0125075 A1 6/2005 Meade et al.
2005/0131438 A1 6/2005 Cohn
2005/0137499 A1 6/2005 Sheets et al.
2005/0137609 A1 6/2005 Guiraudon
2005/0137681 A1 6/2005 Shoemaker et al.
2005/0137682 A1 6/2005 Justino
2005/0137683 A1 6/2005 Hezi-Yamit et al.
2005/0137686 A1 6/2005 Salahieh et al.
2005/0137687 A1 6/2005 Salahieh et al.
2005/0137688 A1 6/2005 Salahieh et al.
2005/0137689 A1 6/2005 Salahieh et al.
2005/0137690 A1 6/2005 Salahieh et al.
2005/0137691 A1 6/2005 Salahieh et al.
2005/0137692 A1 6/2005 Haug et al.
2005/0137693 A1 6/2005 Haug et al.
2005/0137694 A1 6/2005 Haug et al.
2005/0137695 A1 6/2005 Salahieh et al.
2005/0137696 A1 6/2005 Salahieh et al.
2005/0137697 A1 6/2005 Salahieh et al.
2005/0137698 A1 6/2005 Salahieh et al.
2005/0137699 A1 6/2005 Salahieh et al.
2005/0137701 A1 6/2005 Salahieh et al.
2005/0137702 A1 6/2005 Haug et al.
2005/0138689 A1 6/2005 Aukerman
2005/0143804 A1 6/2005 Haverkost
2005/0143807 A1 6/2005 Pavcnik et al.
2005/0143809 A1 6/2005 Salahieh et al.
2005/0148997 A1 7/2005 Valley et al.
2005/0149159 A1 7/2005 Andreas et al.
2005/0149166 A1 7/2005 Schaeffer et al.
2005/0149181 A1 7/2005 Eberhardt
2005/0150775 A1 7/2005 Zhang et al.

(56) **References Cited**

U.S. PATENT DOCUMENTS

2005/0159726 A1 7/2005 Evans et al.
2005/0165352 A1 7/2005 Henry et al.
2005/0165477 A1 7/2005 Anduiza et al.
2005/0165479 A1 7/2005 Drews et al.
2005/0171597 A1 8/2005 Boatman et al.
2005/0171598 A1 8/2005 Schaeffer
2005/0177227 A1 8/2005 Heim et al.
2005/0182483 A1 8/2005 Osborne et al.
2005/0182486 A1 8/2005 Gabbay
2005/0186349 A1 8/2005 Loper et al.
2005/0187616 A1 8/2005 Realyvasquez
2005/0192527 A1 9/2005 Gharib et al.
2005/0192665 A1 9/2005 Spenser et al.
2005/0197694 A1 9/2005 Pai et al.
2005/0197695 A1 9/2005 Stacchino et al.
2005/0203549 A1 9/2005 Realyvasquez
2005/0203605 A1 9/2005 Dolan
2005/0203614 A1 9/2005 Forster et al.
2005/0203615 A1 9/2005 Forster et al.
2005/0203616 A1 9/2005 Cribier
2005/0203617 A1 9/2005 Forster et al.
2005/0203618 A1 9/2005 Sharkawy et al.
2005/0203818 A9 9/2005 Rotman et al.
2005/0209580 A1 9/2005 Freyman
2005/0214342 A1 9/2005 Tweden et al.
2005/0222664 A1 10/2005 Parker
2005/0222668 A1 10/2005 Schaeffer et al.
2005/0222674 A1 10/2005 Paine
2005/0228334 A1 10/2005 Knudson et al.
2005/0228472 A1 10/2005 Case et al.
2005/0228495 A1 10/2005 Macoviak
2005/0228496 A1 10/2005 Mensah et al.
2005/0234546 A1 10/2005 Nugent et al.
2005/0240200 A1 10/2005 Bergheim
2005/0240262 A1 10/2005 White
2005/0240263 A1 10/2005 Fogarty et al.
2005/0251243 A1 11/2005 Seppala et al.
2005/0251250 A1 11/2005 Verhoeven et al.
2005/0251251 A1 11/2005 Cribier
2005/0251252 A1 11/2005 Stobie
2005/0256532 A1 11/2005 Nayak et al.
2005/0261759 A1 11/2005 Lambrecht et al.
2005/0267523 A1 12/2005 Devellian et al.
2005/0267560 A1 12/2005 Bates
2005/0267567 A1 12/2005 Shalev
2005/0267573 A9 12/2005 Macoviak et al.
2005/0283231 A1 12/2005 Haug et al.
2005/0283962 A1 12/2005 Boudjemline
2005/0288627 A1 12/2005 Mogul
2005/0288685 A1 12/2005 Gulles et al.
2005/0288706 A1 12/2005 Widomski et al.
2006/0004439 A1 1/2006 Spenser et al.
2006/0004442 A1 1/2006 Spenser et al.
2006/0004469 A1 1/2006 Sokel
2006/0009841 A1 1/2006 McGuckin, Jr. et al.
2006/0009842 A1 1/2006 Huynh et al.
2006/0015168 A1 1/2006 Gunderson
2006/0025855 A1 2/2006 Lashinski et al.
2006/0025857 A1 2/2006 Bergheim et al.
2006/0028766 A1 2/2006 Khizroev
2006/0041218 A1 2/2006 Phelps et al.
2006/0047338 A1 3/2006 Jenson et al.
2006/0047343 A1 3/2006 Oviatt et al.
2006/0052736 A1 3/2006 Tweden et al.
2006/0052867 A1 3/2006 Revuelta et al.
2006/0058775 A1 3/2006 Stevens et al.
2006/0058864 A1 3/2006 Schaeffer et al.
2006/0058871 A1 3/2006 Zakay et al.
2006/0058872 A1 3/2006 Salahieh et al.
2006/0064151 A1 3/2006 Guterman et al.
2006/0069424 A1 3/2006 Acosta et al.
2006/0074477 A1 4/2006 Berthiaume et al.
2006/0074484 A1 4/2006 Huber
2006/0074485 A1 4/2006 Realyvasquez
2006/0077447 A1 4/2006 Sojian et al.
2006/0085060 A1 4/2006 Campbell
2006/0089711 A1 4/2006 Dolan
2006/0100685 A1 5/2006 Seguin et al.
2006/0111770 A1 5/2006 Pavcnik et al.
2006/0116757 A1 6/2006 Lashinski et al.
2006/0122692 A1 6/2006 Gilad et al.
2006/0135961 A1 6/2006 Rosenman et al.
2006/0135964 A1 6/2006 Vesely
2006/0136034 A1 6/2006 Modesitt et al.
2006/0142846 A1 6/2006 Pavcnik et al.
2006/0142848 A1 6/2006 Gabbay
2006/0149360 A1 7/2006 Schwammenthal et al.
2006/0155312 A1 7/2006 Levine et al.
2006/0155363 A1 7/2006 LaDuca et al.
2006/0155366 A1 7/2006 LaDuca et al.
2006/0161248 A1 7/2006 Case et al.
2006/0161249 A1 7/2006 Realyvasquez et al.
2006/0161265 A1 7/2006 Levine et al.
2006/0167474 A1 7/2006 Bloom et al.
2006/0167543 A1 7/2006 Bailey et al.
2006/0173524 A1 8/2006 Salahieh et al.
2006/0178740 A1 8/2006 Stacchino et al.
2006/0190070 A1 8/2006 Dieck et al.
2006/0193885 A1 8/2006 Leonard Neethling et al.
2006/0195134 A1 8/2006 Crittenden
2006/0195183 A1 8/2006 Navia et al.
2006/0195186 A1 8/2006 Drews et al.
2006/0206192 A1 9/2006 Tower et al.
2006/0206202 A1 9/2006 Bonhoeffer et al.
2006/0210597 A1 9/2006 Hiles
2006/0212110 A1 9/2006 Osborne et al.
2006/0212111 A1 9/2006 Case et al.
2006/0217802 A1 9/2006 Ruiz et al.
2006/0224183 A1 10/2006 Freudenthal
2006/0229561 A1 10/2006 Huszar
2006/0229718 A1 10/2006 Marquez
2006/0229719 A1 10/2006 Marquez et al.
2006/0241745 A1 10/2006 Solem
2006/0246584 A1 11/2006 Covelli
2006/0247570 A1 11/2006 Pokorney
2006/0247763 A1 11/2006 Slater
2006/0253191 A1 11/2006 Salahieh et al.
2006/0259134 A1 11/2006 Schwammenthal et al.
2006/0259135 A1 11/2006 Navia et al.
2006/0259136 A1 11/2006 Nguyen et al.
2006/0259137 A1 11/2006 Artof et al.
2006/0265043 A1 11/2006 Mandrusov et al.
2006/0265056 A1 11/2006 Nguyen et al.
2006/0270958 A1 11/2006 George
2006/0271149 A1 11/2006 Berez et al.
2006/0271161 A1 11/2006 Meyer et al.
2006/0271166 A1 11/2006 Thill et al.
2006/0271175 A1 11/2006 Woolfson et al.
2006/0276872 A1* 12/2006 Arbefeuille A61F 2/89
623/1.11
2006/0276873 A1 12/2006 Sato
2006/0276874 A1 12/2006 Wilson et al.
2006/0276882 A1 12/2006 Case et al.
2006/0276887 A1 12/2006 Brady et al.
2006/0282161 A1 12/2006 Huynh et al.
2006/0287668 A1 12/2006 Fawzi et al.
2006/0287717 A1 12/2006 Rowe et al.
2006/0287719 A1 12/2006 Rowe et al.
2006/0290027 A1 12/2006 O'Connor et al.
2006/0293745 A1 12/2006 Carpentier et al.
2007/0005129 A1 1/2007 Damm et al.
2007/0005131 A1 1/2007 Taylor
2007/0005132 A1 1/2007 Simionescu et al.
2007/0010876 A1 1/2007 Salahieh et al.
2007/0010877 A1 1/2007 Salahieh et al.
2007/0010878 A1 1/2007 Rafiee et al.
2007/0010887 A1 1/2007 Williams et al.
2007/0016286 A1 1/2007 Herrmann et al.
2007/0016288 A1 1/2007 Gurskis et al.
2007/0020248 A1 1/2007 Everaerts et al.
2007/0021826 A1 1/2007 Case et al.
2007/0027518 A1 2/2007 Case et al.
2007/0027520 A1 2/2007 Sherburne
2007/0027533 A1 2/2007 Douk

(56) **References Cited**

U.S. PATENT DOCUMENTS

2007/0027535 A1 2/2007 Purdy, Jr. et al.
2007/0032856 A1 2/2007 Limon
2007/0032879 A1 2/2007 Levine et al.
2007/0038291 A1 2/2007 Case et al.
2007/0038295 A1 2/2007 Case et al.
2007/0043420 A1 2/2007 Lostetter
2007/0043424 A1 2/2007 Pryor
2007/0043431 A1 2/2007 Melsheimer
2007/0043435 A1 2/2007 Seguin et al.
2007/0050014 A1 3/2007 Johnson
2007/0051377 A1 3/2007 Douk et al.
2007/0055340 A1 3/2007 Pryor
2007/0056346 A1 3/2007 Spenser et al.
2007/0060998 A1 3/2007 Butterwick et al.
2007/0061002 A1 3/2007 Paul, Jr. et al.
2007/0061008 A1 3/2007 Salahieh et al.
2007/0073389 A1 3/2007 Bolduc et al.
2007/0073392 A1 3/2007 Heyninck-Jantz et al.
2007/0078504 A1 4/2007 Mialhe
2007/0078509 A1 4/2007 Lotfy
2007/0078510 A1 4/2007 Ryan
2007/0088431 A1 4/2007 Bourang et al.
2007/0093869 A1 4/2007 Bloom et al.
2007/0093887 A1 4/2007 Case et al.
2007/0100427 A1 5/2007 Perouse
2007/0100435 A1 5/2007 Case et al.
2007/0100439 A1 5/2007 Cangialosi et al.
2007/0100440 A1 5/2007 Figulla et al.
2007/0100449 A1 5/2007 O'Neil et al.
2007/0112355 A1 5/2007 Salahieh et al.
2007/0112358 A1 5/2007 Abbott et al.
2007/0112415 A1 5/2007 Bartlett
2007/0112422 A1 5/2007 Dehdashtian
2007/0118214 A1 5/2007 Salahieh et al.
2007/0123700 A1 5/2007 Ueda et al.
2007/0123979 A1 5/2007 Perier et al.
2007/0135889 A1 6/2007 Moore et al.
2007/0142906 A1 6/2007 Figulla et al.
2007/0142907 A1 6/2007 Moaddeb et al.
2007/0155010 A1 7/2007 Farnsworth et al.
2007/0156233 A1 7/2007 Kapadia et al.
2007/0162102 A1 7/2007 Ryan et al.
2007/0162103 A1 7/2007 Case et al.
2007/0162107 A1 7/2007 Haug et al.
2007/0162113 A1 7/2007 Sharkawy et al.
2007/0173918 A1 7/2007 Dreher et al.
2007/0173932 A1 7/2007 Cali et al.
2007/0179592 A1 8/2007 Schaeffer
2007/0179600 A1 8/2007 Vardi
2007/0185513 A1 8/2007 Woolfson et al.
2007/0185565 A1 8/2007 Schwammenthal et al.
2007/0185571 A1 8/2007 Kapadia et al.
2007/0198078 A1 8/2007 Berra et al.
2007/0198097 A1 8/2007 Zegdi
2007/0203391 A1 8/2007 Bloom et al.
2007/0203503 A1 8/2007 Salahieh et al.
2007/0203560 A1 8/2007 Forster et al.
2007/0203576 A1 8/2007 Lee et al.
2007/0208550 A1 9/2007 Cao et al.
2007/0213813 A1 9/2007 Von Segesser et al.
2007/0225681 A1 9/2007 House
2007/0225802 A1 9/2007 Forsell
2007/0232898 A1 10/2007 Huynh et al.
2007/0233222 A1 10/2007 Roeder et al.
2007/0233228 A1 10/2007 Eberhardt et al.
2007/0233237 A1 10/2007 Krivoruchko
2007/0233238 A1 10/2007 Huynh et al.
2007/0238979 A1 10/2007 Huynh et al.
2007/0239254 A1 10/2007 Chia et al.
2007/0239265 A1 10/2007 Birdsall
2007/0239266 A1 10/2007 Birdsall
2007/0239269 A1 10/2007 Dolan et al.
2007/0239271 A1 10/2007 Nguyen
2007/0239273 A1 10/2007 Allen
2007/0244543 A1 10/2007 Mitchell
2007/0244544 A1 10/2007 Birdsall et al.
2007/0244545 A1 10/2007 Birdsall et al.
2007/0244546 A1 10/2007 Francis
2007/0244551 A1 10/2007 Stobie
2007/0244552 A1 10/2007 Salahieh et al.
2007/0244553 A1 10/2007 Rafiee et al.
2007/0244554 A1 10/2007 Rafiee et al.
2007/0244555 A1 10/2007 Rafiee et al.
2007/0244556 A1 10/2007 Rafiee et al.
2007/0244557 A1 10/2007 Rafiee et al.
2007/0250151 A1 10/2007 Pereira
2007/0250160 A1 10/2007 Rafiee
2007/0255386 A1 11/2007 Tenne
2007/0255390 A1 11/2007 Ducke et al.
2007/0255394 A1 11/2007 Ryan
2007/0255396 A1 11/2007 Douk et al.
2007/0260301 A1 11/2007 Chuter et al.
2007/0260327 A1 11/2007 Case et al.
2007/0265701 A1 11/2007 Gurskis et al.
2007/0270751 A1 11/2007 Stangenes et al.
2007/0270943 A1 11/2007 Solem et al.
2007/0273813 A1 11/2007 Yoshida et al.
2007/0282436 A1 12/2007 Pinchuk
2007/0287717 A1 12/2007 Fanning et al.
2007/0288000 A1 12/2007 Bonan
2007/0288087 A1 12/2007 Fearnot et al.
2007/0288089 A1 12/2007 Gurskis et al.
2008/0004688 A1 1/2008 Spenser et al.
2008/0004696 A1 1/2008 Vesely
2008/0009934 A1 1/2008 Schneider et al.
2008/0009940 A1 1/2008 Cribier
2008/0015671 A1 1/2008 Bonhoeffer
2008/0021546 A1 1/2008 Patz et al.
2008/0021552 A1 1/2008 Gabbay
2008/0022504 A1 1/2008 Melsheimer
2008/0033534 A1 2/2008 Cook et al.
2008/0033541 A1 2/2008 Gelbart et al.
2008/0039925 A1 2/2008 Ishimaru et al.
2008/0039934 A1 2/2008 Styrc
2008/0045921 A1 2/2008 Anderson et al.
2008/0048656 A1 2/2008 Tan et al.
2008/0065001 A1 3/2008 Dinucci et al.
2008/0065011 A1 3/2008 Marchand et al.
2008/0065206 A1 3/2008 Liddicoat
2008/0071361 A1 3/2008 Tuval et al.
2008/0071362 A1 3/2008 Tuval et al.
2008/0071363 A1 3/2008 Tuval et al.
2008/0071366 A1 3/2008 Tuval et al.
2008/0071368 A1 3/2008 Tuval et al.
2008/0071369 A1 3/2008 Tuval et al.
2008/0077227 A1 3/2008 Ouellette et al.
2008/0077234 A1 3/2008 Styrc
2008/0077236 A1 3/2008 Letac et al.
2008/0082165 A1 4/2008 Wilson et al.
2008/0082166 A1 4/2008 Styrc et al.
2008/0086205 A1 4/2008 Gordy et al.
2008/0097586 A1 4/2008 Pavcnik et al.
2008/0102439 A1 5/2008 Tian et al.
2008/0109070 A1 5/2008 Wagner et al.
2008/0125859 A1 5/2008 Salahieh et al.
2008/0127707 A1 6/2008 Kokish et al.
2008/0133002 A1 6/2008 Gelbart et al.
2008/0133003 A1 6/2008 Seguin et al.
2008/0140188 A1 6/2008 Rahdert et al.
2008/0140189 A1 6/2008 Nguyen et al.
2008/0147105 A1 6/2008 Wilson et al.
2008/0147180 A1 6/2008 Ghione et al.
2008/0147181 A1 6/2008 Ghione et al.
2008/0147182 A1 6/2008 Righini et al.
2008/0154355 A1 6/2008 Benichou et al.
2008/0154356 A1 6/2008 Obermiller et al.
2008/0161909 A1 7/2008 Kheradvar et al.
2008/0161910 A1 7/2008 Revuelta et al.
2008/0161911 A1 7/2008 Revuelta et al.
2008/0172119 A1 7/2008 Yamasaki et al.
2008/0177381 A1 7/2008 Navia et al.
2008/0183273 A1 7/2008 Mesana et al.
2008/0188928 A1 8/2008 Salahieh et al.
2008/0195193 A1 8/2008 Purdy et al.

(56) **References Cited**

U.S. PATENT DOCUMENTS

2008/0195199 A1 8/2008 Kheradvar et al.
2008/0200977 A1 8/2008 Paul et al.
2008/0208209 A1 8/2008 Fischer et al.
2008/0208327 A1 8/2008 Rowe
2008/0208328 A1 8/2008 Antocci et al.
2008/0208332 A1 8/2008 Lamphere et al.
2008/0215143 A1 9/2008 Seguin
2008/0215144 A1 9/2008 Ryan et al.
2008/0221672 A1 9/2008 Lamphere et al.
2008/0221703 A1 9/2008 Que et al.
2008/0228254 A1 9/2008 Ryan
2008/0228263 A1 9/2008 Ryan
2008/0234443 A1 9/2008 Kiss et al.
2008/0234797 A1 9/2008 Styrc
2008/0234814 A1 9/2008 Salahieh et al.
2008/0243246 A1 10/2008 Ryan et al.
2008/0255651 A1 10/2008 Dwork
2008/0255660 A1 10/2008 Guyenot et al.
2008/0255661 A1 10/2008 Straubinger et al.
2008/0262590 A1 10/2008 Murray
2008/0262592 A1 10/2008 Jordan et al.
2008/0262593 A1 10/2008 Ryan et al.
2008/0262602 A1 10/2008 Wilk et al.
2008/0264102 A1 10/2008 Berra
2008/0269878 A1 10/2008 Iobbi
2008/0275549 A1 11/2008 Rowe
2008/0275550 A1 11/2008 Kheradvar et al.
2008/0288054 A1 11/2008 Pulnev et al.
2009/0005863 A1 1/2009 Goetz et al.
2009/0012356 A1 1/2009 Dann et al.
2009/0012600 A1 1/2009 Styrc et al.
2009/0030512 A1 1/2009 Thielen et al.
2009/0048656 A1 2/2009 Wen
2009/0054968 A1 2/2009 Bonhoeffer et al.
2009/0054969 A1 2/2009 Salahieh et al.
2009/0054976 A1 2/2009 Tuval et al.
2009/0062908 A1 3/2009 Bonhoeffer et al.
2009/0069886 A1 3/2009 Suri et al.
2009/0069887 A1 3/2009 Righini et al.
2009/0069889 A1 3/2009 Suri et al.
2009/0069890 A1 3/2009 Suri et al.
2009/0076598 A1 3/2009 Salahieh et al.
2009/0082844 A1 3/2009 Zacharias et al.
2009/0082858 A1 3/2009 Nugent et al.
2009/0085900 A1 4/2009 Weiner
2009/0093876 A1 4/2009 Nitzan et al.
2009/0093877 A1 4/2009 Keidar et al.
2009/0099640 A1 4/2009 Weng
2009/0099641 A1 4/2009 Wu et al.
2009/0099643 A1 4/2009 Hyodoh et al.
2009/0099653 A1 4/2009 Suri et al.
2009/0112309 A1 4/2009 Jaramillo et al.
2009/0138079 A1 5/2009 Tuval et al.
2009/0157175 A1 6/2009 Benichou
2009/0163951 A1 6/2009 Simmons et al.
2009/0164004 A1 6/2009 Cohn
2009/0164006 A1 6/2009 Seguin et al.
2009/0171432 A1 7/2009 Von Segesser et al.
2009/0171447 A1 7/2009 Von Segesser et al.
2009/0171456 A1 7/2009 Kveen et al.
2009/0182405 A1 7/2009 Arnault De La Menardiere et al.
2009/0192585 A1 7/2009 Bloom et al.
2009/0192586 A1 7/2009 Tabor et al.
2009/0192591 A1 7/2009 Ryan et al.
2009/0192601 A1 7/2009 Rafiee et al.
2009/0198316 A1 8/2009 Laske et al.
2009/0198323 A1 8/2009 Johnson et al.
2009/0210052 A1 8/2009 Forster et al.
2009/0216310 A1 8/2009 Straubinger et al.
2009/0216312 A1 8/2009 Straubinger et al.
2009/0216313 A1 8/2009 Straubinger et al.
2009/0222076 A1 9/2009 Figulla et al.
2009/0222082 A1 9/2009 Lock et al.
2009/0234407 A1 9/2009 Hastings et al.
2009/0234443 A1 9/2009 Ottma et al.
2009/0240264 A1 9/2009 Tuval et al.
2009/0240320 A1 9/2009 Tuval et al.
2009/0248143 A1 10/2009 Laham
2009/0259306 A1 10/2009 Rowe
2009/0264759 A1 10/2009 Byrd
2009/0264997 A1 10/2009 Salahieh et al.
2009/0276040 A1 11/2009 Rowe et al.
2009/0281619 A1 11/2009 Le et al.
2009/0287290 A1 11/2009 MacAulay et al.
2009/0287296 A1 11/2009 Manasse
2009/0287299 A1 11/2009 Tabor et al.
2009/0299462 A1 12/2009 Fawzi et al.
2009/0319037 A1 12/2009 Rowe et al.
2010/0004739 A1 1/2010 Vesely
2010/0004740 A1 1/2010 Seguin et al.
2010/0011564 A1 1/2010 Millwee et al.
2010/0022948 A1 1/2010 Wilson et al.
2010/0030328 A1 2/2010 Seguin et al.
2010/0036479 A1 2/2010 Hill et al.
2010/0036485 A1 2/2010 Seguin
2010/0049313 A1 2/2010 Alon et al.
2010/0057051 A1 3/2010 Howat et al.
2010/0057185 A1 3/2010 Melsheimer et al.
2010/0063573 A1 3/2010 Hijlkema et al.
2010/0069852 A1 3/2010 Kelley
2010/0069916 A1 3/2010 Cully et al.
2010/0070027 A1 3/2010 Bonhoeffer et al.
2010/0082089 A1 4/2010 Quadri et al.
2010/0082094 A1 4/2010 Quadri et al.
2010/0087913 A1 4/2010 Rabkin et al.
2010/0094399 A1 4/2010 Dorn et al.
2010/0094411 A1 4/2010 Tuval et al.
2010/0100167 A1 4/2010 Bortlein et al.
2010/0121434 A1 5/2010 Paul et al.
2010/0131054 A1 5/2010 Tuval et al.
2010/0131057 A1 5/2010 Subramanian et al.
2010/0137979 A1 6/2010 Tuval et al.
2010/0145439 A1 6/2010 Seguin et al.
2010/0152840 A1 6/2010 Seguin et al.
2010/0160725 A1 6/2010 Kiser et al.
2010/0161045 A1 6/2010 Righini
2010/0168839 A1 7/2010 Braido et al.
2010/0174362 A1 7/2010 Straubinger et al.
2010/0185275 A1 7/2010 Richter et al.
2010/0185277 A1 7/2010 Braido et al.
2010/0191320 A1 7/2010 Straubinger et al.
2010/0191326 A1 7/2010 Alkhatib
2010/0198346 A1 8/2010 Keogh et al.
2010/0210991 A1 8/2010 Wilk et al.
2010/0219092 A1 9/2010 Salahieh et al.
2010/0234932 A1 9/2010 Arbefeuille et al.
2010/0234940 A1 9/2010 Dolan
2010/0239917 A1 9/2010 Lee et al.
2010/0249908 A1 9/2010 Chau et al.
2010/0249915 A1 9/2010 Zhang
2010/0249916 A1 9/2010 Zhang
2010/0249917 A1 9/2010 Zhang
2010/0249918 A1 9/2010 Zhang
2010/0256723 A1 10/2010 Murray
2010/0262231 A1 10/2010 Tuval et al.
2010/0268332 A1 10/2010 Tuval et al.
2010/0280459 A1 11/2010 Werner
2010/0280495 A1 11/2010 Paul et al.
2010/0286768 A1 11/2010 Alkhatib
2010/0292779 A1 11/2010 Straubinger et al.
2010/0292780 A1 11/2010 Straubinger et al.
2010/0292785 A1 11/2010 Seguin et al.
2010/0298931 A1 11/2010 Quadri et al.
2011/0004297 A1 1/2011 Sogard et al.
2011/0015616 A1 1/2011 Straubinger et al.
2011/0022157 A1 1/2011 Essinger et al.
2011/0029066 A1 2/2011 Gilad et al.
2011/0034852 A1 2/2011 Hausler et al.
2011/0040366 A1 2/2011 Goetz et al.
2011/0040374 A1 2/2011 Goetz et al.
2011/0071613 A1 3/2011 Wood et al.
2011/0093007 A1 4/2011 Abbott et al.
2011/0098805 A1 4/2011 Dwork et al.
2011/0106244 A1 5/2011 Ferrari et al.

(56) **References Cited**

U.S. PATENT DOCUMENTS

2011/0118545 A1 5/2011 Williams et al.
2011/0137397 A1 6/2011 Chau et al.
2011/0166637 A1 7/2011 Irwin et al.
2011/0190862 A1 8/2011 Bashiri et al.
2011/0190874 A1 8/2011 Celermajer et al.
2011/0208290 A1 8/2011 Straubinger et al.
2011/0208297 A1 8/2011 Tuval et al.
2011/0224780 A1 9/2011 Tabor et al.
2011/0238159 A1 9/2011 Guyenot et al.
2011/0238167 A1 9/2011 Dove et al.
2011/0257729 A1 10/2011 Spenser et al.
2011/0257733 A1 10/2011 Dwork
2011/0257735 A1 10/2011 Salahieh et al.
2011/0264191 A1 10/2011 Rothstein
2011/0264196 A1 10/2011 Savage et al.
2011/0264203 A1 10/2011 Dwork et al.
2011/0276091 A1 11/2011 Melanson et al.
2011/0276121 A1 11/2011 Levine
2011/0276129 A1 11/2011 Salahieh et al.
2011/0288626 A1 11/2011 Straubinger et al.
2011/0288634 A1 11/2011 Tuval et al.
2011/0295363 A1 12/2011 Girard et al.
2011/0319989 A1 12/2011 Lane et al.
2012/0016469 A1 1/2012 Salahieh et al.
2012/0016471 A1 1/2012 Salahieh et al.
2012/0022633 A1 1/2012 Olson et al.
2012/0022642 A1 1/2012 Haug et al.
2012/0029627 A1 2/2012 Salahieh et al.
2012/0035719 A1 2/2012 Forster et al.
2012/0035720 A1 2/2012 Cali et al.
2012/0041547 A1 2/2012 Duffy et al.
2012/0041549 A1 2/2012 Salahieh et al.
2012/0041550 A1 2/2012 Salahieh et al.
2012/0046740 A1 2/2012 Paul et al.
2012/0053683 A1 3/2012 Salahieh et al.
2012/0059447 A1 3/2012 Zilla et al.
2012/0065464 A1 3/2012 Ellis et al.
2012/0078347 A1 3/2012 Braido et al.
2012/0078357 A1 3/2012 Conklin
2012/0078360 A1 3/2012 Rafiee
2012/0089224 A1 4/2012 Haug et al.
2012/0100182 A1 4/2012 Mooney et al.
2012/0101571 A1 4/2012 Thambar et al.
2012/0101572 A1 4/2012 Kovalsky et al.
2012/0116496 A1 5/2012 Chuter et al.
2012/0123515 A1 5/2012 Hosford et al.
2012/0123529 A1 5/2012 Levi et al.
2012/0130468 A1 5/2012 Khosravi et al.
2012/0132547 A1 5/2012 Salahieh et al.
2012/0136430 A1 5/2012 Sochman et al.
2012/0143084 A1 6/2012 Shoham
2012/0165957 A1 6/2012 Everland et al.
2012/0172982 A1 7/2012 Stacchino et al.
2012/0179244 A1 7/2012 Schankereli et al.
2012/0185030 A1 7/2012 Igaki et al.
2012/0197379 A1 8/2012 Laske et al.
2012/0209374 A1 8/2012 Bonhoeffer et al.
2012/0209376 A1 8/2012 Hauser et al.
2012/0221100 A1 8/2012 Huber
2012/0226341 A1 9/2012 Schreck et al.
2012/0265296 A1 10/2012 McNamara et al.
2012/0283715 A1 11/2012 Mihalik et al.
2012/0283823 A1 11/2012 Bonhoeffer et al.
2012/0303113 A1 11/2012 Benichou et al.
2012/0303116 A1 11/2012 Gorman, III et al.
2012/0305441 A1 12/2012 Murray et al.
2012/0310332 A1 12/2012 Murray et al.
2012/0316637 A1 12/2012 Holm et al.
2012/0330408 A1 12/2012 Hillukka et al.
2012/0330409 A1 12/2012 Haug et al.
2013/0013057 A1 1/2013 Salahieh et al.
2013/0018457 A1 1/2013 Gregg et al.
2013/0023984 A1 1/2013 Conklin
2013/0030519 A1 1/2013 Tran et al.
2013/0030520 A1 1/2013 Lee et al.
2013/0046373 A1 2/2013 Cartledge et al.
2013/0053949 A1 2/2013 Pintor et al.
2013/0066342 A1 3/2013 Dell et al.
2013/0066419 A1 3/2013 Gregg
2013/0071441 A1 3/2013 Iwazawa et al.
2013/0073037 A1 3/2013 Gregg et al.
2013/0079867 A1 3/2013 Hoffman et al.
2013/0079869 A1 3/2013 Straubinger et al.
2013/0089655 A1 4/2013 Gregg
2013/0090728 A1 4/2013 Solem
2013/0090729 A1 4/2013 Gregg et al.
2013/0096664 A1 4/2013 Goetz et al.
2013/0116778 A1 5/2013 Gregg et al.
2013/0118949 A1 5/2013 Chang et al.
2013/0123757 A1 5/2013 Crisostomo et al.
2013/0123795 A1 5/2013 Gamarra et al.
2013/0123796 A1 5/2013 Sutton et al.
2013/0123898 A1 5/2013 Tung et al.
2013/0138207 A1 5/2013 Quadri et al.
2013/0144203 A1 6/2013 Wilk et al.
2013/0144276 A1 6/2013 Crisostomo et al.
2013/0158653 A1 6/2013 Gamarra et al.
2013/0158655 A1 6/2013 Sutton et al.
2013/0158656 A1 6/2013 Sutton et al.
2013/0166017 A1 6/2013 Cartledge et al.
2013/0178930 A1 7/2013 Straubinger et al.
2013/0184813 A1 7/2013 Quadri et al.
2013/0190865 A1 7/2013 Anderson
2013/0204359 A1 8/2013 Thubrikar et al.
2013/0231735 A1 9/2013 Deem et al.
2013/0245752 A1 9/2013 Goetz et al.
2013/0253342 A1 9/2013 Griswold et al.
2013/0253635 A1 9/2013 Straubinger et al.
2013/0253640 A1 9/2013 Meiri et al.
2013/0268067 A1 10/2013 Forster et al.
2013/0274865 A1 10/2013 Haverkost et al.
2013/0274870 A1 10/2013 Lombardi et al.
2013/0289698 A1 10/2013 Wang et al.
2013/0296999 A1 11/2013 Burriesci et al.
2013/0304199 A1 11/2013 Sutton et al.
2013/0310917 A1 11/2013 Richter et al.
2013/0310923 A1 11/2013 Kheradvar et al.
2013/0310928 A1 11/2013 Morriss et al.
2013/0325101 A1 12/2013 Goetz et al.
2013/0338595 A1 12/2013 Voss
2013/0338755 A1 12/2013 Goetz et al.
2013/0345799 A1 12/2013 Lafontaine
2014/0012368 A1 1/2014 Sugimoto et al.
2014/0012370 A1 1/2014 Bonhoeffer et al.
2014/0018911 A1 1/2014 Zhou et al.
2014/0052239 A1 2/2014 Kong et al.
2014/0058501 A1 2/2014 Bonhoeffer et al.
2014/0083190 A1 3/2014 Kaack et al.
2014/0088680 A1 3/2014 Costello et al.
2014/0094904 A1 4/2014 Salahieh et al.
2014/0114390 A1 4/2014 Tobis et al.
2014/0114405 A1 4/2014 Paul et al.
2014/0114406 A1 4/2014 Salahieh et al.
2014/0114407 A1 4/2014 Rajamannan
2014/0121763 A1 5/2014 Duffy et al.
2014/0121766 A1 5/2014 Salahieh et al.
2014/0128969 A1 5/2014 Hill et al.
2014/0135909 A1 5/2014 Carr et al.
2014/0135912 A1 5/2014 Salahieh et al.
2014/0207229 A1 7/2014 Shoemaker et al.
2014/0222142 A1 8/2014 Kovalsky et al.
2014/0236287 A1 8/2014 Clague et al.
2014/0243962 A1 8/2014 Wilson et al.
2014/0243963 A1 8/2014 Sheps et al.
2014/0243967 A1 8/2014 Salahieh et al.
2014/0249621 A1 9/2014 Eidenschink
2014/0249622 A1 9/2014 Carmi et al.
2014/0257473 A1 9/2014 Rajamannan
2014/0277414 A1 9/2014 Kheradvar
2014/0296962 A1 10/2014 Cartledge et al.
2014/0309732 A1 10/2014 Solem
2014/0316518 A1 10/2014 Kheradvar et al.
2014/0330371 A1 11/2014 Gloss et al.
2014/0343669 A1 11/2014 Lane et al.

(56) **References Cited**

U.S. PATENT DOCUMENTS

2014/0364799	A1	12/2014	Beauvais et al.
2014/0379068	A1	12/2014	Thielen et al.
2015/0012085	A1	1/2015	Salahieh et al.
2015/0032056	A1	1/2015	Okamura et al.
2015/0032198	A1	1/2015	Folk
2015/0073540	A1	3/2015	Salahieh et al.
2015/0073541	A1	3/2015	Salahieh et al.
2015/0088252	A1	3/2015	Jenson et al.
2015/0094804	A1	4/2015	Bonhoeffer et al.
2015/0105857	A1	4/2015	Bonhoeffer et al.
2015/0127092	A1	5/2015	Straubinger et al.
2015/0127094	A1	5/2015	Salahieh et al.
2015/0142102	A1	5/2015	LaFontaine et al.
2015/0148894	A1	5/2015	Damm et al.
2015/0209142	A1	7/2015	Paul et al.
2015/0209146	A1	7/2015	Hill et al.
2015/0223933	A1	8/2015	Haug et al.
2015/0238315	A1	8/2015	Rabito et al.
2015/0245909	A1	9/2015	Salahieh et al.
2015/0272731	A1	10/2015	Racchini et al.
2015/0320557	A1	11/2015	Sutton et al.
2015/0335423	A1	11/2015	Gregg et al.
2015/0352252	A1	12/2015	Nakamura et al.
2015/0359997	A1	12/2015	Crisostomo et al.
2016/0022418	A1	1/2016	Salahieh et al.
2016/0045306	A1	2/2016	Agrawal et al.
2016/0045307	A1	2/2016	Yohanan et al.
2016/0051362	A1	2/2016	Cooper et al.
2016/0067040	A1	3/2016	Agrawal et al.
2016/0120645	A1	5/2016	Alon
2016/0135951	A1	5/2016	Salahieh et al.
2016/0143731	A1	5/2016	Backus et al.
2016/0158003	A1	6/2016	Wallace et al.
2016/0166384	A1	6/2016	Olson et al.
2016/0199184	A1	7/2016	Ma et al.
2016/0206423	A1	7/2016	O'Connor et al.
2016/0213467	A1	7/2016	Backus et al.
2016/0220359	A1	8/2016	Backus et al.
2016/0220360	A1	8/2016	Lin et al.
2016/0220365	A1	8/2016	Backus et al.
2016/0250024	A1	9/2016	Hill et al.
2016/0256271	A1	9/2016	Backus et al.
2016/0262878	A1	9/2016	Backus et al.
2016/0346107	A1	12/2016	Matthison-Hansen et al.
2016/0354203	A1	12/2016	Tuval et al.
2016/0374793	A1	12/2016	LaFontaine et al.
2016/0376063	A1	12/2016	Salahieh et al.
2017/0000609	A1	1/2017	Gross et al.
2017/0007400	A1	1/2017	Sogard et al.
2017/0027654	A1	2/2017	Frimer et al.
2017/0027693	A1	2/2017	Paul et al.
2017/0049563	A1	2/2017	Straubinger et al.
2017/0049568	A1	2/2017	Straubinger et al.
2017/0056172	A1	3/2017	Salahieh et al.
2017/0065410	A1	3/2017	Straubinger et al.
2017/0087343	A1	3/2017	Assaf et al.
2017/0095595	A1	4/2017	Nakamura
2017/0189177	A1	7/2017	Schweich, Jr. et al.
2017/0212723	A1	7/2017	Atarot et al.
2017/0265849	A1	9/2017	Assaf et al.
2017/0325954	A1	11/2017	Perszyk
2017/0333230	A1	11/2017	Folan et al.
2017/0348013	A1	12/2017	Mottola et al.
2018/0116843	A1	5/2018	Schreck et al.
2018/0325604	A1	11/2018	Atarot et al.
2018/0368976	A1	12/2018	Bonhoeffer et al.
2019/0328522	A1	10/2019	Straubinger et al.
2020/0054449	A1	2/2020	Min et al.
2021/0038313	A1	2/2021	Sholev et al.
2021/0322153	A1	10/2021	Tuval et al.
2022/0061987	A1	3/2022	Duffy
2022/0079747	A1	3/2022	Girard et al.
2022/0192765	A1	6/2022	Brasset et al.
2022/0304803	A1	9/2022	Guyenot et al.
2024/0148503	A1	5/2024	Chu et al.
2024/0164902	A1	5/2024	Lee et al.
2024/0164903	A1	5/2024	Chu et al.

FOREIGN PATENT DOCUMENTS

AU	777443	B2	10/2004
AU	778831	B2	12/2004
AU	2004231189	A1	12/2004
AU	2004242527	A1	1/2005
AU	2001281277	B2	9/2005
AU	2006308187	A1	5/2007
AU	2006310681	A1	5/2007
AU	2002329324	B2	7/2007
AU	2007294199	A1	3/2008
AU	2009200985	A1	4/2009
AU	2006328896	B2	8/2013
CA	2378589	A1	2/2001
CA	2381192	A1	2/2001
CA	2385662	A1	3/2001
CA	2407987	A1	11/2001
CA	2418958	A1	2/2002
CA	2435962	A1	8/2002
CA	2457755	A1	2/2003
CA	2436258	A1	1/2005
CA	2848485	A1	1/2005
CA	2848490	A1	1/2005
CA	2595233	A1	7/2006
CA	2627409	A1	5/2007
CA	2627555	A1	5/2007
CA	2634358	A1	6/2007
CA	2657839	A1	3/2008
CA	2659690	A1	3/2008
CN	1338951	A	3/2002
CN	1342443	A	4/2002
CN	1745727	A	3/2006
CN	2762776	Y	3/2006
CN	1897892	A	1/2007
CN	2933337	Y	8/2007
CN	101011298	A	8/2007
CN	101431963	A	5/2009
CN	101605509	A	12/2009
CN	101623217	A	1/2010
CN	101700199	A	5/2010
CN	101720211	A	6/2010
CN	102271626	A	12/2011
CN	102413793	A	4/2012
CN	103118630	A	5/2013
DE	2815756	A1	10/1979
DE	3920657	A1	1/1991
DE	3640745	C2	3/1992
DE	4316971	A1	11/1994
DE	19532846	A1	3/1997
DE	19546692	A1	6/1997
DE	19633901	A1	2/1998
DE	20003874	U1	5/2000
DE	19857887	A1	7/2000
DE	19907646	A1	8/2000
DE	10010073	A1	9/2001
DE	10010074	A1	10/2001
DE	10034105	C1	4/2002
DE	10049813	C1	4/2002
DE	10049814	A1	4/2002
DE	10121210	A1	11/2002
DE	19546692	C2	11/2002
DE	10301026	A1	2/2004
DE	10048814	B4	4/2004
DE	10049812	B4	6/2004
DE	10302447	A1	7/2004
DE	10335948	B3	2/2005
DE	10010074	B4	4/2005
DE	19857887	B4	5/2005
DE	10049815	B4	10/2005
DE	10010073	B4	12/2005
DE	102005003632	A1	8/2006
DE	102005051849	A1	5/2007
DE	102005052628	A1	5/2007
DE	202007005491	U1	6/2007
DE	20221871	U1	9/2008

(56) **References Cited**

FOREIGN PATENT DOCUMENTS

DE	69937568	T2	9/2008
EP	0084395	A1	7/1983
EP	0103546	B1	5/1988
EP	0144167	B1	11/1989
EP	0402036	A1	12/1990
EP	0402176	A2	12/1990
EP	0411118	A1	2/1991
EP	0458877	A1	12/1991
EP	0515324	A1	11/1992
EP	0547135	A1	6/1993
EP	0579523	A1	1/1994
EP	0402176	B1	4/1994
EP	0592410	A1	4/1994
EP	0597967	A4	12/1994
EP	0458877	B1	5/1995
EP	0657147	A2	6/1995
EP	0592410	B1	10/1995
EP	0402036	B1	4/1996
EP	0729364	A1	9/1996
EP	0732088	A2	9/1996
EP	0756498	A1	2/1997
EP	0409929	B1	4/1997
EP	0778775	A1	6/1997
EP	0792624	A1	9/1997
EP	0797957	A1	10/1997
EP	0797958	A1	10/1997
EP	0799604	A1	10/1997
EP	0801928	A1	10/1997
EP	0815798	A2	1/1998
EP	0826346	A1	3/1998
EP	0829239	A1	3/1998
EP	0836834	A2	4/1998
EP	0850607	A1	7/1998
EP	0853921	A2	7/1998
EP	0858779	A1	8/1998
EP	0871414	A1	10/1998
EP	0876796	A2	11/1998
EP	0876803	A2	11/1998
EP	0778775	B1	1/1999
EP	0888750	A1	1/1999
EP	0895752	A1	2/1999
EP	0896813	A2	2/1999
EP	0903122	A2	3/1999
EP	0928615	A1	7/1999
EP	0657147	B1	8/1999
EP	0934728	A2	8/1999
EP	0938877	A2	9/1999
EP	0597967	B1	12/1999
EP	0696447	B1	1/2000
EP	0971649	A1	1/2000
EP	0986348	A1	3/2000
EP	1020166	A1	7/2000
EP	1027870	A1	8/2000
EP	1041942	A1	10/2000
EP	1041943	A1	10/2000
EP	1057459	A1	12/2000
EP	1057460	A1	12/2000
EP	1089676	A2	4/2001
EP	1097676	A1	5/2001
EP	1112042	A1	7/2001
EP	1117446	A1	7/2001
EP	1158937	A1	12/2001
EP	0547135	B1	1/2002
EP	0729364	B1	1/2002
EP	1164976	A1	1/2002
EP	1166721	A2	1/2002
EP	1171061	A1	1/2002
EP	1206179	A1	5/2002
EP	0756498	B1	7/2002
EP	1233731	A1	8/2002
EP	0986348	B1	9/2002
EP	1235537	A1	9/2002
EP	1248655	A1	10/2002
EP	1251804	A1	10/2002
EP	1251805	A2	10/2002
EP	1257305	A1	11/2002
EP	1259195	A1	11/2002
EP	0959815	B1	12/2002
EP	0971649	B1	12/2002
EP	1262201	A1	12/2002
EP	1264582	A2	12/2002
EP	1281357	A2	2/2003
EP	1281375	A2	2/2003
EP	0888142	B1	5/2003
EP	1112097	B1	6/2003
EP	0937439	B1	9/2003
EP	1017868	B1	9/2003
EP	1354569	A1	10/2003
EP	1340473	A3	2/2004
EP	1041943	B1	3/2004
EP	1356793	A3	3/2004
EP	0871414	B1	4/2004
EP	1042045	B1	5/2004
EP	1414295	A2	5/2004
EP	0819013	B1	6/2004
EP	1430853	A2	6/2004
EP	1347785	B1	7/2004
EP	1435879	A1	7/2004
EP	1439800	A2	7/2004
EP	0954248	B1	9/2004
EP	1452153	A1	9/2004
EP	0987998	B1	10/2004
EP	1206179	B1	10/2004
EP	1469797	A1	10/2004
EP	1087727	B1	11/2004
EP	1115452	B1	11/2004
EP	1117446	B1	11/2004
EP	1472996	A1	11/2004
EP	1477202	A2	11/2004
EP	1107710	B1	12/2004
EP	1233731	B1	12/2004
EP	1484081	A1	12/2004
EP	1494616	A2	1/2005
EP	1499366	A1	1/2005
EP	1143879	B1	3/2005
EP	1516599	A2	3/2005
EP	1518518	A2	3/2005
EP	1229864	B1	4/2005
EP	1253875	B1	4/2005
EP	1521414	A1	4/2005
EP	1522278	A2	4/2005
EP	1088529	B1	6/2005
EP	1093771	B1	6/2005
EP	1251803	B1	6/2005
EP	1547533	A2	6/2005
EP	1059894	B1	7/2005
EP	1551336	A1	7/2005
EP	1000590	B1	8/2005
EP	1027013	B1	8/2005
EP	1078610	B1	8/2005
EP	1560542	A1	8/2005
EP	1562515	A1	8/2005
EP	1570809	A1	9/2005
EP	1576937	A2	9/2005
EP	0943302	B1	10/2005
EP	1267753	B1	10/2005
EP	1582178	A2	10/2005
EP	1582179	A2	10/2005
EP	1011523	B1	11/2005
EP	1067869	B1	11/2005
EP	1469797	B1	11/2005
EP	1589902	A1	11/2005
EP	1598031	A2	11/2005
EP	1600110	A1	11/2005
EP	0786970	B1	12/2005
EP	1156757	B1	12/2005
EP	1021141	B1	1/2006
EP	1614400	A2	1/2006
EP	1616536	A2	1/2006
EP	1041942	B1	6/2006
EP	1663070	A2	6/2006
EP	1690515	A1	8/2006
EP	1051204	B1	12/2006
EP	1395208	B1	1/2007

(56) **References Cited**

FOREIGN PATENT DOCUMENTS

EP	1251805	B1	3/2007
EP	1255510	B1	4/2007
EP	1499366	B1	7/2007
EP	1600121	B1	7/2007
EP	1112042	B1	11/2007
EP	1251797	B1	11/2007
EP	1616531	B1	12/2007
EP	1878407	A1	1/2008
EP	1886649	A2	2/2008
EP	1406561	A4	3/2008
EP	1900343	A2	3/2008
EP	1435878	B1	4/2008
EP	1886649	A3	4/2008
EP	1251804	B1	7/2008
EP	1605871	B1	7/2008
EP	1259195	B1	10/2008
EP	1980220	A1	10/2008
EP	1994913	A2	11/2008
EP	1994913	A3	12/2008
EP	2000115	A2	12/2008
EP	1408882	B1	2/2009
EP	1255510	B3	3/2009
EP	1330213	B1	3/2009
EP	2033593	A1	3/2009
EP	2074964	A1	7/2009
EP	1401359	B1	8/2009
EP	1968491	B1	7/2010
EP	1259193	B1	11/2010
EP	2257242	A1	12/2010
EP	2266503	A2	12/2010
EP	2266504	A2	12/2010
EP	1893132	B1	3/2011
EP	2059192	B1	7/2011
EP	1441672	B1	9/2011
EP	2364669	A2	9/2011
EP	2387977	A1	11/2011
EP	1603493	B1	12/2011
EP	1281375	B1	2/2012
EP	2047824	B1	5/2012
EP	2474287	A1	7/2012
EP	2387977	B1	11/2013
EP	1551274	B1	12/2014
EP	2874812	A1	5/2015
EP	2749254	B1	6/2015
EP	1702247	B1	8/2015
EP	2926766	A1	10/2015
EP	1519697	B1	11/2015
EP	1863545	B1	11/2015
EP	1835948	B1	2/2016
EP	1734902	B1	6/2016
EP	3028668	A1	6/2016
EP	1539047	B1	11/2016
EP	3181096	A1	6/2017
EP	2659861	B1	3/2019
EP	1667614	B2	4/2020
EP	3270825	B1	4/2020
EP	3730094	A1	10/2020
EP	3730094	B1	4/2024
FR	2788217	A1	7/2000
FR	2815844	A1	5/2002
FR	2828263	A1	2/2003
GB	2398245	B	3/2007
GB	2433700	A	7/2007
GB	2440809	A	2/2008
JP	S5286296	A	7/1977
JP	S54137896	A	9/1979
JP	S62227352	A	10/1987
JP	S6449571	A	2/1989
JP	H0447576	B2	8/1992
JP	H04505866	A	10/1992
JP	H06505187	A	6/1994
JP	H06343703	A	12/1994
JP	H07504091	A	5/1995
JP	H07505803	A	6/1995
JP	H07265339	A	10/1995
JP	H0833715	A	2/1996
JP	H1049571	A	2/1998
JP	H10507673	A	7/1998
JP	2001000460	A	1/2001
JP	2001504016	A	3/2001
JP	2001526574	A	12/2001
JP	2002525168	A	8/2002
JP	2002525169	A	8/2002
JP	2002536115	A	10/2002
JP	2003515386	A	5/2003
JP	2003518984	A	6/2003
JP	2003523262	A	8/2003
JP	2003524504	A	8/2003
JP	2004504111	A	2/2004
JP	2004130068	A	4/2004
JP	2004514467	A	5/2004
JP	2004255186	A	9/2004
JP	2004267750	A	9/2004
JP	2004283461	A	10/2004
JP	2005505343	A	2/2005
JP	2005118585	A	5/2005
JP	2007521125	A	8/2007
JP	2007296375	A	11/2007
JP	2007298375	A	11/2007
JP	2007534381	A	11/2007
JP	2007536003	A	12/2007
JP	2008506497	A	3/2008
JP	2008514345	A	5/2008
JP	2008535572	A	9/2008
JP	2008539985	A	11/2008
JP	2008541865	A	11/2008
JP	2009034529	A	2/2009
JP	2009061293	A	3/2009
JP	2009509635	A	3/2009
JP	4246433	B2	4/2009
JP	2009520535	A	5/2009
JP	2009131397	A	6/2009
JP	4295460	B2	7/2009
JP	2009528905	A	8/2009
JP	2009534157	A	9/2009
JP	2010525896	A	7/2010
JP	2010526609	A	8/2010
JP	4636794	B2	2/2011
JP	2011509805	A	3/2011
JP	4739223	B2	8/2011
JP	2012500665	A	1/2012
JP	4904362	B2	3/2012
JP	4912395	B2	4/2012
JP	2012518446	A	8/2012
JP	2013520260	A	6/2013
JP	2013521884	A	6/2013
JP	2013526388	A	6/2013
JP	5341455	B2	11/2013
JP	2013540495	A	11/2013
JP	6144009	B2	6/2017
JP	6449571	B2	1/2019
WO	WO-8402266	A1	6/1984
WO	WO-9009102	A1	8/1990
WO	WO-9014804	A1	12/1990
WO	WO-9117720	A1	11/1991
WO	WO-9203990	A1	3/1992
WO	WO-9212690	A1	8/1992
WO	WO-9214419	A1	9/1992
WO	WO-9217118	A1	10/1992
WO	WO-9301768	A1	2/1993
WO	WO-9315693	A1	8/1993
WO	WO-9320757	A2	10/1993
WO	WO-9504556	A2	2/1995
WO	WO-9511055	A1	4/1995
WO	WO-9524873	A1	9/1995
WO	WO-9528183	A1	10/1995
WO	WO-9528899	A1	11/1995
WO	WO-9529640	A1	11/1995
WO	WO-9529713	A1	11/1995
WO	WO-9613227	A1	5/1996
WO	WO-9614032	A1	5/1996
WO	WO-9624306	A1	8/1996
WO	WO-9630072	A1	10/1996
WO	WO-9632972	A1	10/1996

(56) **References Cited**

FOREIGN PATENT DOCUMENTS

WO	WO-9635469	A1	11/1996
WO	WO-9639962	A1	12/1996
WO	WO-9639964	A1	12/1996
WO	WO-9639965	A1	12/1996
WO	WO-9640012	A1	12/1996
WO	WO-9713463	A1	4/1997
WO	WO-9713471	A1	4/1997
WO	WO-9724082	A1	7/1997
WO	WO-9727893	A1	8/1997
WO	WO-9727897	A1	8/1997
WO	WO-9727898	A1	8/1997
WO	WO-9732551	A1	9/1997
WO	WO-9732615	A1	9/1997
WO	WO-9743961	A1	11/1997
WO	WO-9748350	A1	12/1997
WO	WO-9803118	A1	1/1998
WO	WO-9806356	A1	2/1998
WO	WO-9808456	A1	3/1998
WO	WO-9810714	A1	3/1998
WO	WO-9811846	A1	3/1998
WO	WO-9814137	A1	4/1998
WO	WO-9816161	A1	4/1998
WO	WO-9819633	A1	5/1998
WO	WO-9824373	A1	6/1998
WO	WO-9825533	A1	6/1998
WO	WO-9825549	A1	6/1998
WO	WO-9829057	A1	7/1998
WO	WO-9836790	A1	8/1998
WO	WO-9838916	A1	9/1998
WO	WO-9838925	A1	9/1998
WO	WO-9838939	A1	9/1998
WO	WO-9838941	A1	9/1998
WO	WO-9839038	A1	9/1998
WO	WO-9843556	A1	10/1998
WO	WO-9844869	A1	10/1998
WO	WO-9846115	A2	10/1998
WO	WO-9846119	A1	10/1998
WO	WO-9846165	A1	10/1998
WO	WO-9849964	A1	11/1998
WO	WO-9850103	A1	11/1998
WO	WO-9853759	A2	12/1998
WO	WO-9853761	A1	12/1998
WO	WO-9855027	A2	12/1998
WO	WO-9855047	A1	12/1998
WO	WO-9857590	A1	12/1998
WO	WO-9857591	A1	12/1998
WO	WO-9857592	A1	12/1998
WO	WO-9857599	A2	12/1998
WO	WO-9907296	A1	2/1999
WO	WO-9908624	A1	2/1999
WO	WO-9915112	A1	4/1999
WO	WO-9915220	A1	4/1999
WO	WO-9917671	A1	4/1999
WO	WO-9917683	A1	4/1999
WO	WO-9921490	A1	5/1999
WO	WO-9921510	A1	5/1999
WO	WO-9922655	A1	5/1999
WO	WO-9922656	A1	5/1999
WO	WO-9922658	A1	5/1999
WO	WO-9925273	A1	5/1999
WO	WO-9927985	A1	6/1999
WO	WO-9933414	A1	7/1999
WO	WO-9935977	A1	7/1999
WO	WO-9935979	A1	7/1999
WO	WO-9935980	A1	7/1999
WO	WO-9936000	A1	7/1999
WO	WO-9936001	A1	7/1999
WO	WO-9937337	A2	7/1999
WO	WO-9938459	A2	8/1999
WO	WO-9940853	A1	8/1999
WO	WO-9940868	A1	8/1999
WO	WO-9940963	A1	8/1999
WO	WO-9940964	A1	8/1999
WO	WO-9942058	A1	8/1999
WO	WO-9944524	A2	9/1999
WO	WO-9944540	A2	9/1999
WO	WO-9944542	A2	9/1999
WO	WO-9947071	A1	9/1999
WO	WO-9947075	A1	9/1999
WO	WO-9948545	A1	9/1999
WO	WO-9948549	A2	9/1999
WO	WO-9949793	A1	10/1999
WO	WO-9949910	A2	10/1999
WO	WO-9951162	A1	10/1999
WO	WO-9951165	A1	10/1999
WO	WO-9953863	A1	10/1999
WO	WO-9953987	A1	10/1999
WO	WO-9955406	A1	11/1999
WO	WO-9960941	A1	12/1999
WO	WO-9962430	A1	12/1999
WO	WO-9966863	A2	12/1999
WO	WO-0002503	A1	1/2000
WO	WO-0009059	A2	2/2000
WO	WO-0009195	A1	2/2000
WO	WO-0010623	A1	3/2000
WO	WO-0012029	A1	3/2000
WO	WO-0013722	A1	3/2000
WO	WO-0015146	A1	3/2000
WO	WO-0015147	A1	3/2000
WO	WO-0015148	A1	3/2000
WO	WO-0015149	A1	3/2000
WO	WO-0015275	A2	3/2000
WO	WO-0016848	A1	3/2000
WO	WO-0018302	A2	4/2000
WO	WO-0018323	A2	4/2000
WO	WO-0018325	A1	4/2000
WO	WO-0018326	A1	4/2000
WO	WO-0018330	A1	4/2000
WO	WO-0018331	A2	4/2000
WO	WO-0018333	A1	4/2000
WO	WO-0018445	A1	4/2000
WO	WO-0018462	A2	4/2000
WO	WO-0021436	A1	4/2000
WO	WO-0021461	A2	4/2000
WO	WO-0021463	A1	4/2000
WO	WO-0021464	A1	4/2000
WO	WO-0024449	A1	5/2000
WO	WO-0025702	A1	5/2000
WO	WO-0028922	A1	5/2000
WO	WO-0028924	A2	5/2000
WO	WO-0033725	A2	6/2000
WO	WO-0035376	A1	6/2000
WO	WO-0036997	A1	6/2000
WO	WO-0041632	A1	7/2000
WO	WO-0041633	A1	7/2000
WO	WO-0041652	A1	7/2000
WO	WO-0043051	A1	7/2000
WO	WO-0044211	A1	7/2000
WO	WO-0044308	A2	8/2000
WO	WO-0044311	A2	8/2000
WO	WO-0044313	A1	8/2000
WO	WO-0044331	A1	8/2000
WO	WO-0045711	A1	8/2000
WO	WO-0045874	A1	8/2000
WO	WO-0045886	A2	8/2000
WO	WO-0047136	A1	8/2000
WO	WO-0047139	A1	8/2000
WO	WO-0048531	A1	8/2000
WO	WO-0049952	A1	8/2000
WO	WO-0049954	A2	8/2000
WO	WO-0049956	A1	8/2000
WO	WO-0049970	A1	8/2000
WO	WO-0053122	A1	9/2000
WO	WO-0053125	A1	9/2000
WO	WO-0054660	A1	9/2000
WO	WO-0054661	A1	9/2000
WO	WO-0056224	A1	9/2000
WO	WO-0056225	A1	9/2000
WO	WO-0056387	A1	9/2000
WO	WO-0060995	A2	10/2000
WO	WO-0062714	A1	10/2000
WO	WO-0066007	A1	11/2000
WO	WO-0066009	A1	11/2000
WO	WO-0066035	A1	11/2000

(56) **References Cited**

FOREIGN PATENT DOCUMENTS

WO	WO-0067661	A2	11/2000
WO	WO-0069345	A1	11/2000
WO	WO-0069367	A1	11/2000
WO	WO-0069504	A1	11/2000
WO	WO-0071195	A1	11/2000
WO	WO-0078226	A1	12/2000
WO	WO-0105331	A1	1/2001
WO	WO-0106959	A1	2/2001
WO	WO-0108566	A1	2/2001
WO	WO-0108596	A1	2/2001
WO	WO-0108602	A1	2/2001
WO	WO-0110209	A1	2/2001
WO	WO-0110320	A1	2/2001
WO	WO-0110340	A1	2/2001
WO	WO-0110341	A2	2/2001
WO	WO-0110343	A1	2/2001
WO	WO-0110347	A1	2/2001
WO	WO-0110348	A1	2/2001
WO	WO-0110349	A1	2/2001
WO	WO-0110350	A1	2/2001
WO	WO-0117440	A1	3/2001
WO	WO-0117456	A1	3/2001
WO	WO-0135864	A1	5/2001
WO	WO-0135870	A1	5/2001
WO	WO-0136870	A1	5/2001
WO	WO-0139700	A1	6/2001
WO	WO-0141679	A1	6/2001
WO	WO-0149185	A1	7/2001
WO	WO-0149187	A1	7/2001
WO	WO-0149213	A2	7/2001
WO	WO-0151104	A1	7/2001
WO	WO-0154625	A1	8/2001
WO	WO-0158503	A1	8/2001
WO	WO-0162189	A1	8/2001
WO	WO-0047139	A9	9/2001
WO	WO-0164137	A1	9/2001
WO	WO-0176510	A2	10/2001
WO	WO-0182837	A2	11/2001
WO	WO-0197715	A1	12/2001
WO	WO-0211647	A2	2/2002
WO	WO-0219926	A1	3/2002
WO	WO-0222054	A1	3/2002
WO	WO-0224118	A1	3/2002
WO	WO-0236048	A1	5/2002
WO	WO-0241789	A2	5/2002
WO	WO-0243620	A1	6/2002
WO	WO-0247575	A2	6/2002
WO	WO-0249540	A2	6/2002
WO	WO-02051489	A2	7/2002
WO	WO-02056798	A2	7/2002
WO	WO-02056955	A1	7/2002
WO	WO-02058745	A1	8/2002
WO	WO-02060509	A1	8/2002
WO	WO-02067782	A2	9/2002
WO	WO-02069842	A2	9/2002
WO	WO-02076349	A1	10/2002
WO	WO-02100297	A2	12/2002
WO	WO-02100301	A1	12/2002
WO	WO-02102286	A1	12/2002
WO	WO-03003943	A2	1/2003
WO	WO-03003949	A2	1/2003
WO	WO-03007795	A2	1/2003
WO	WO-03009785	A1	2/2003
WO	WO-03011195	A2	2/2003
WO	WO-03013239	A2	2/2003
WO	WO-03015851	A1	2/2003
WO	WO-03022183	A1	3/2003
WO	WO-03028592	A1	4/2003
WO	WO-03030776	A2	4/2003
WO	WO-03032869	A1	4/2003
WO	WO-03032870	A1	4/2003
WO	WO-03037222	A2	5/2003
WO	WO-03037227	A2	5/2003
WO	WO-03047460	A2	6/2003
WO	WO-03047468	A1	6/2003
WO	WO-03047648	A2	6/2003
WO	WO-03051231	A2	6/2003
WO	WO-03063729	A2	8/2003
WO	WO-03079928	A2	10/2003
WO	WO-03079932	A2	10/2003
WO	WO-03079933	A1	10/2003
WO	WO-03088873	A1	10/2003
WO	WO-03092554	A1	11/2003
WO	WO-03094793	A1	11/2003
WO	WO-03094797	A1	11/2003
WO	WO-03096932	A1	11/2003
WO	WO-03096935	A1	11/2003
WO	WO-03101195	A1	12/2003
WO	WO-03103949	A1	12/2003
WO	WO-03003949	A3	1/2004
WO	WO-2004004597	A2	1/2004
WO	WO-2004006803	A1	1/2004
WO	WO-2004006804	A1	1/2004
WO	WO-2004014256	A1	2/2004
WO	WO-2004016200	A1	2/2004
WO	WO-2004016201	A2	2/2004
WO	WO-2004019811	A2	3/2004
WO	WO-2004019817	A1	3/2004
WO	WO-2004019825	A1	3/2004
WO	WO-2004021922	A2	3/2004
WO	WO-2004023980	A2	3/2004
WO	WO-2004026117	A2	4/2004
WO	WO-2004026173	A2	4/2004
WO	WO-2004028399	A2	4/2004
WO	WO-2004030515	A2	4/2004
WO	WO-2004041126	A1	5/2004
WO	WO-2004043293	A2	5/2004
WO	WO-2004043301	A1	5/2004
WO	WO-2004047681	A1	6/2004
WO	WO-2004058106	A2	7/2004
WO	WO-2004062980	A1	7/2004
WO	WO-2004064671	A2	8/2004
WO	WO-2004066876	A1	8/2004
WO	WO-2004071352	A1	8/2004
WO	WO-2004082527	A2	9/2004
WO	WO-2004082528	A2	9/2004
WO	WO-2004082536	A1	9/2004
WO	WO-2004089250	A1	10/2004
WO	WO-2004089253	A1	10/2004
WO	WO-2004093728	A2	11/2004
WO	WO-2004096100	A1	11/2004
WO	WO-2004103162	A2	12/2004
WO	WO-2004105651	A1	12/2004
WO	WO-2005002466	A2	1/2005
WO	WO-2005004753	A1	1/2005
WO	WO-2005007343	A1	1/2005
WO	WO-2005009285	A2	2/2005
WO	WO-2005011534	A1	2/2005
WO	WO-2005011535	A2	2/2005
WO	WO-2005021063	A2	3/2005
WO	WO-2005023155	A1	3/2005
WO	WO-2005027790	A1	3/2005
WO	WO-2005027797	A1	3/2005
WO	WO-2005032622	A2	4/2005
WO	WO-2005034812	A1	4/2005
WO	WO-2005010215	A3	5/2005
WO	WO-2005046528	A1	5/2005
WO	WO-2005046529	A1	5/2005
WO	WO-2005048883	A1	6/2005
WO	WO-2005062980	A2	7/2005
WO	WO-2005063980	A1	7/2005
WO	WO-2005065585	A1	7/2005
WO	WO-2005065594	A1	7/2005
WO	WO-2005070343	A1	8/2005
WO	WO-2005072654	A1	8/2005
WO	WO-2005076890	A2	8/2005
WO	WO-2005084595	A1	9/2005
WO	WO-2005087140	A1	9/2005
WO	WO-2005096993	A1	10/2005
WO	WO-2005102015	A2	11/2005
WO	WO-2005110240	A1	11/2005
WO	WO-2005112779	A1	12/2005
WO	WO-2006005015	A2	1/2006
WO	WO-2006009690	A1	1/2006

(56) **References Cited**

FOREIGN PATENT DOCUMENTS

WO	WO-2006026371	A1	3/2006
WO	WO-2006027499	A2	3/2006
WO	WO-2005062980	A3	5/2006
WO	WO-2006058163	A2	6/2006
WO	WO-2006065949	A2	6/2006
WO	WO-2006066327	A1	6/2006
WO	WO-2006068944	A2	6/2006
WO	WO-2006070372	A2	7/2006
WO	WO-2006076890	A1	7/2006
WO	WO-2006083763	A1	8/2006
WO	WO-2006086135	A2	8/2006
WO	WO-2006086736	A2	8/2006
WO	WO-2006089517	A1	8/2006
WO	WO-2006093795	A1	9/2006
WO	WO-2006102063	A2	9/2006
WO	WO-2006108090	A2	10/2006
WO	WO-2006118766	A1	11/2006
WO	WO-2006124649	A2	11/2006
WO	WO-2006127756	A2	11/2006
WO	WO-2006127765	A1	11/2006
WO	WO-2006129441	A1	12/2006
WO	WO-2006132948	A1	12/2006
WO	WO-2006133959	A1	12/2006
WO	WO-2006138173	A2	12/2006
WO	WO-2006138391	A2	12/2006
WO	WO-2007009117	A1	1/2007
WO	WO-2007009609	A1	1/2007
WO	WO-2007013999	A2	2/2007
WO	WO-2007033093	A2	3/2007
WO	WO-2007035471	A2	3/2007
WO	WO-2005102015	A3	4/2007
WO	WO-2007044285	A2	4/2007
WO	WO-2007047488	A2	4/2007
WO	WO-2007047945	A2	4/2007
WO	WO-2007048529	A1	5/2007
WO	WO-2007051620	A1	5/2007
WO	WO-2007053243	A2	5/2007
WO	WO-2007058847	A2	5/2007
WO	WO-2007059252	A1	5/2007
WO	WO-2006086736	A3	6/2007
WO	WO-2007071436	A2	6/2007
WO	WO-2007092354	A2	8/2007
WO	WO-2007097983	A2	8/2007
WO	WO-2007098232	A2	8/2007
WO	WO-2007120543	A1	10/2007
WO	WO-2007123658	A1	11/2007
WO	WO-2007123956	A2	11/2007
WO	WO-2007071436	B1	1/2008
WO	WO-2008028569	A1	3/2008
WO	WO-2008031103	A2	3/2008
WO	WO-2008035337	A2	3/2008
WO	WO-2008040555	A2	4/2008
WO	WO-2008045949	A2	4/2008
WO	WO-2008047354	A2	4/2008
WO	WO-2008051554	A2	5/2008
WO	WO-2008070442	A1	6/2008
WO	WO-2008070797	A2	6/2008
WO	WO-2008079962	A1	7/2008
WO	WO-2008098191	A2	8/2008
WO	WO-2008100599	A1	8/2008
WO	WO-2008101083	A2	8/2008
WO	WO-2008118481	A2	10/2008
WO	WO-2008125153	A1	10/2008
WO	WO-2008137603	A2	11/2008
WO	WO-2008138584	A1	11/2008
WO	WO-2008150529	A1	12/2008
WO	WO-2009002548	A1	12/2008
WO	WO-2009024859	A2	2/2009
WO	WO-2009029199	A1	3/2009
WO	WO-2009042196	A2	4/2009
WO	WO-2009045334	A1	4/2009
WO	WO-2009045338	A1	4/2009
WO	WO-2009053497	A1	4/2009
WO	WO-2009054397	A1	4/2009
WO	WO-2009061389	A2	5/2009
WO	WO-2009085206	A2	7/2009
WO	WO-2009091509	A1	7/2009
WO	WO-2009094188	A2	7/2009
WO	WO-2009094501	A1	7/2009
WO	WO-2009100198	A2	8/2009
WO	WO-2009106545	A1	9/2009
WO	WO-2009108615	A1	9/2009
WO	WO-2009111241	A2	9/2009
WO	WO-2009137712	A1	11/2009
WO	WO-2009149462	A2	12/2009
WO	WO-2009155561	A2	12/2009
WO	WO-2010022138	A2	2/2010
WO	WO-2010042950	A2	4/2010
WO	WO-2010043950	A2	4/2010
WO	WO-2010045238	A2	4/2010
WO	WO-2010045297	A2	4/2010
WO	WO-2010049160	A1	5/2010
WO	WO-2010083558	A1	7/2010
WO	WO-2010086460	A1	8/2010
WO	WO-2010098857	A1	9/2010
WO	WO-2010104638	A2	9/2010
WO	WO-2010141626	A2	12/2010
WO	WO-2011008812	A2	1/2011
WO	WO-2011035327	A1	3/2011
WO	WO-2011051043	A1	5/2011
WO	WO-2011057087	A1	5/2011
WO	WO-2011060386	A2	5/2011
WO	WO-2011102968	A1	8/2011
WO	WO-2011102970	A1	8/2011
WO	WO-2011104269	A1	9/2011
WO	WO-2011120050	A1	9/2011
WO	WO-2011126749	A1	10/2011
WO	WO-2011133368	A1	10/2011
WO	WO-2011144351	A2	11/2011
WO	WO-2011147849	A1	12/2011
WO	WO-2012002228	A1	1/2012
WO	WO-2012023980	A1	2/2012
WO	WO-2012036742	A2	3/2012
WO	WO-2012038550	A1	3/2012
WO	WO-2012039748	A2	3/2012
WO	WO-2012082952	A2	6/2012
WO	WO-2012106491	A1	8/2012
WO	WO-2012116368	A2	8/2012
WO	WO-2012142189	A1	10/2012
WO	WO-2012162228	A1	11/2012
WO	WO-2013009975	A1	1/2013
WO	WO-2013028387	A2	2/2013
WO	WO-2013033791	A1	3/2013
WO	WO-2013074671	A1	5/2013
WO	WO-2013096545	A1	6/2013
WO	WO-2013134214	A1	9/2013
WO	WO-2014056644	A1	4/2014
WO	WO-2014072439	A1	5/2014
WO	WO-2015028209	A1	3/2015
WO	WO-2015063118	A1	5/2015
WO	WO-2016093877	A1	6/2016
WO	WO-2016126511	A2	8/2016
WO	WO-2016150806	A1	9/2016
WO	WO-2016177562	A1	11/2016
WO	WO-2021242607	A1	12/2021
WO	WO-2023156879	A1	8/2023

OTHER PUBLICATIONS

US 8,062,356 B2, 11/2011, Salahieh et al. (withdrawn)
US 8,062,357 B2, 11/2011, Salahieh et al. (withdrawn)
US 8,075,614 B2, 12/2011, Salahieh et al. (withdrawn)
US 8,133,271 B2, 03/2012, Salahieh et al. (withdrawn)
US 8,211,170 B2, 07/2012, Paul et al. (withdrawn)
International Search Report & Written Opinion dated Feb. 20, 2024 in Int'l PCT Patent Appl. Serial No. PCT/IB2023/037029.
Invitation to Pay Additional Fees & Partial Search Report dated Feb. 28, 2024 in Int'l PCT Patent Appl. Serial No. PCT/US2023/080979.
International Search Report & Written Report Opinion dated Apr. 17, 2024 in Int'l PCT Patent Appl. Serial No. PCT/US2023/080979.
Akins C.W., et al., "Risk of Reoperative Valve Replacement for Failed Mitral and Aortic Bioprostheses," The Annals of Thoracic

(56) **References Cited**

OTHER PUBLICATIONS

Surgery, 65:545-1552 (Jan. 1998). Retrieved from the Internet: URL: http://ats.ctsnetjournals.org/cgi/contenUfull/65/6/1545 (Jan. 1998).
Allen et al., "What are the characteristics of the ideal endovascular graft for abdominal aortic aneurysm exclusion?", J. Endovasc. Surg., vol. 4(2), May 1997, pp. 195-202.
Anabtawi I.N., et al., "Experimental evaluation of myocardial tunnelization as a method of myocardial revascularization," Journal of Thoracic and Cardiovascular Surgery, 58(5):638-646 (Nov. 1969).
Andersen H.R., et al., "Transluminal Implantation of Artificial Heart Valves. Description of a New Expandable Aortic Valve and Initial Results with Implantation by Catheter Technique in Closed Chest Pigs," European Heart Journal, May 1992, vol. 13, pp. 704-708.
"Aortenklappenbioprothese erfolgreich in der Entwicklung," May 16, 2003, 1 page (with English Translation).
Archie J.P., et al., "Intramyocardial Pressure: Effect of Preload on Transmural Distribution of Systolic Coronary Blood Flow," The American Journal of Cardiology, 35(6):904-911 (Jun. 1975).
Baba H., et al., "Hemodynamic effects of venous valves in aorta-coronary bypass grafts," The Journal of Thoracic and Cardiovascular Surgery, 71(5):774-778 (May 1976).
Babaliaros V., et al., "State of the Art Percutaneous Intervention for the Treatment of Valvular Heart Disease: A Review of the Current Technologies and Ongoing Research in the Field of Percutaneous Valve Replacement and Repair," Cardiology, 2007, vol. 107, pp. 87-96.
Bailey S.R., "Percutaneous Expandable Prosthetic Valves," Textbook of Interventional Cardiology, Second Edition, W.B. Saunders Company, 1994, vol. 2, pp. 1268-1276.
Block P.C., et al., "Percutaneous Approaches to Valvular Heart Disease," Current Cardiology Reports, Mar. 2005, vol. 7(2), pp. 108-113.
Blum et al., "Endoluminal Stent—Grafts for Intrarenal Abdominal Aortic Aneurysms." New Engl. J. Med., 336:13-20 (Jan. 1997).
Bonhoeffer et al., "Percutaneous Mitral Valve Dilatation with the Multi-Track System," Catheterization and Cardiovascular Interventions—Official Journal of the Society for Cardiac Angiograhy & Interventions, United States (Oct. 1999), pp. 178-183.
Bonhoeffer P., et al., "Percutaneous Insertion of the Pulmonary Valve," Journal of the American College of Cardiology, May 15, 2002, vol. 39, pp. 1664-1669.
Bonhoeffer P., et al., "Percutaneous Replacement of Pulmonary Valve in a Right-Ventricle to Pulmonary-Artery Prosthetic Conduit with Valve Dysfunction," Lancet, Oct. 2000, vol. 356, pp. 1403-1405.
Bonhoeffer P., et al., "Technique and Results of Percutaneous Mitral Valvuloplasty With the Multi-Track System," Journal of Interventional Cadiology, 13(4):263-268 (Aug. 2000).
Bonhoeffer P., et al., "Transcatheter Implantation of a Bovine Valve in Pulmonary Position: A Lamb Study," Circulation, Aug. 15, 2000, vol. 102, pp. 813-816.
Boudjemline et al., "Percutaneous Implantation of a Biological Valve in Aortic Position: Preliminary Results in a Sheep Study," European Heart Journal, vol. 22, p. 630, Abstract Only (Sep. 2001).
Boudjemline Y., et al., "Images in Cardiovascular Medicine: Percutaneous Aortic Valve Replacement in Animals," Circulation, United States, Mar. 16, 2004, vol. 109, p. e161.
Boudjemline Y., et al., "Is Percutaneous Implantation of a Bovine Venous Valve in the Inferior Vena Cava a Reliable Technique to Treat Chronic Venous Insufficiency Syndrome?," Medical Science Monitor, Poland, Mar. 2004, vol. 10(3), pp. BR61-BR66.
Boudjemline Y., et al., "Off-Pump Replacement of the Pulmonary Valve in Large Right Ventricular Outflow Tracts: A Hybrid Approach," Journal of Thoracic and Cardiovascular Surgery, United States, Apr. 2005, vol. 129(4), pp. 831-837.
Boudjemline Y., et al., "Percutaneous Aortic Valve Replacement: Will We Get There?," Heart, British Cardiac Society, England, Dec. 2001, vol. 86, pp. 705-706.
Boudjemline Y., et al., "Percutaneous Implantation of a Biological Valve in the Aorta to Treat Aortic Valve Insufficiency—A Sheep Study," Medical Science Monitor, Apr. 12, 2002 , vol. 8(4), pp. BR113-BR116.
Boudjemline Y., et al., "Percutaneous Implantation of a Valve in the Descending Aorta in Lambs," European Heart Journal, Jul. 2002, vol. 23, pp. 1045-1049.
Boudjemline Y., et al., "Percutaneous Pulmonary Valve Replacement in a Large Right Ventricular Outflow Tract: An Experimental Study," Journal of the American College of Cardiology, Mar. 17, 2004, vol. 43(6), pp. 1082-1087.
Boudjemline Y., et al., "Percutaneous Valve Insertion: A New Approach?," Journal of Thoracic and Cardiovascular Surgery, United States, Mar. 2003, vol. 125(3), pp. 741-742.
Boudjemline Y., et al., "Stent Implantation Combined with a Valve Replacement to Treat Degenerated Right Ventricle to Pulmonary Artery Prosthetic Conduits," European Heart Journal, Sep. 2001, vol. 22, p. 355.
Boudjemline Y., et al., "Steps Toward Percutaneous Aortic Valve Replacement," Circulation, Feb. 12, 2002, vol. 105, pp. 775-778.
Boudjemline Y., et al., "The Percutaneous Implantable Heart Valve," Progress in Pediatric Cardiology, Ireland, 2001 , vol. 14, pp. 89-93.
Boudjemline Y., et al., "Transcatheter Reconstruction of the Right Heart," Cardiology in the Young, England, 2003, vol. 13, pp. 308-311.
Bruce C.J., et al., "Right-sided Valve Disease Deserves Little More Respect," Circulation, 119(2):2726-2734 (May 2009).
Coats L., et al., "The Potential Impact of Percutaneous Pulmonary Valve Stent Implantation on Right Ventricular Outflow Tract Re-Intervention," European Journal of Cardio-Thoracic Surgery, England, Apr. 2005, vol. 27, pp. 536-543.
Commeau P et al., "Percutaneous Balloon Dilatation of calcific aortic Valve Stenosis: Anatomical and Haemodynamic Evaluation," British Heart Journal, 59:227-238 (Feb. 1988).
Cribier A., et al., "Percutaneous Transcatheter Implantation of an Aortic Valve Prosthesis for Calcific Aortic Stenosis: First Human Case Description," Circulation, 2002, vol. 106, pp. 3006-3008.
Cribier et al., "Early Experience with Percutaneous Transcatheter Implantation of Heart Valve Prosthesis for the Treatment of End-Stage Inoperable Patients with Calcific Aortic Stenosis", J. of Am. Coll. of Cardio, Feb. 18, 2004, 43(4), pp. 698-703.
Cribier et al., "Percutaneous Transluminal Valvuloplasty of Acquired Aortic Stenosis in Elderly Patients: An Alternative to Valve Replacement?", The Lancet, Jan. 11, 1986, pp. 63-67.
Cunanan et al., "Tissue Characterization and Calcification Potential of Commercial Bioprosthetic Heart Valves." Ann. Thorac. Surg., May 15, 2001, pp. S417-S421.
Cunliffe et al., "Glutaraldehyde Inactivation of Exotic Animal Viruses in Swine Heart Tissue," Applied and Environmental Microbiology, Greenport, New York, vol. 37, No. 5, May 1979, pp. 1044-1046.
Dake et al., "Transluminal Placement of Endovascular Stent-Grafts for the Treatment of Descending Thoracic Aortic Aneurysms." New Engl. J. of Med., 331(26):1729-34 (Dec. 1994).
Dalby et al., "Non-Surgical Aortic Valve Replacement" Br. J. Cardiol., 10(6):450-452 (Nov. 2003).
Davidson M.J., et al., "Percutaneous Therapies for Valvular Heart Disease," Cardiovascular Pathology, Jan. 2006, vol. 15, pp. 123-129.
Dewey et al., "Transapical aortic valve implantation: An Animal Feasibility Study", The annals of thoracic surgery, 82:110-116 (Feb. 2006).
Dhasmana et al., "Factors Associated With Periprosthetic Leakage Following Primary Mitral Valve Replacement: With Special Consideration of Suture Technique." Annals of Thorac. Surg., (Feb. 1983), 35(2), pp. 170-178.
Dotter, "Transluminally-Placed Coilspring Endarterial Tube Grafts," Investigative Radiology, pp. 329-332 (Oct. 1969).
Emery et al., "Replacement of the Aortic Valve in Patients Under 50 Years of Age: Long-Term Follow-Up of the St. Jude Medical Prosthesis." Ann. Thorac. Surg., 75:1815-1819 (Jun. 2003).
Extended EP Search Report dated Sep. 24, 2020 in EP Patent Appl. Serial No. 20165841.6 (JVT-0280).

(56) **References Cited**

OTHER PUBLICATIONS

Ferrari, "Entwicklung eines Verfahrens zum transvaskularen Aortenklappenersatz," Habilitationsschrift, Medizinische Fakultat der Friedrich-Schiller-Universitat Jena, Sep. 2003, pp. 1-159. (With English Translation).
Ferrari, "Entwicklung eines Verfahrens zum transvaskulären Aortenklappenersatz," Habilitationsschrift, Medizinische Fakultät der Friedrich-Schiller-Universität Jena, Sep. 2003, pp. 49-52. (With English Translation).
Ferrari M.W., "Transarterial Aortic Valve Replacement with a Self Expanding Stent in Pigs," Heart, vol. 90, No. 11, doi:10.1136/hrt.2003.028951, ISSN 1355-6037, XP055137208, Nov. 2004, pp. 1326-1331.
File history for German Patent DE 195 46 692 filed Dec. 14, 1995 and patented Jul. 11, 2002, 111 pages.
Filsoufi F., et al., "Long-term Outcomes of Tricuspid Valve Replacement in the Current Era," Ann. Thorac. Surg., 8(3):845-850 (Sep. 2005).
Greeenberg, "Abdominal Aortic Endografting: Fixation and Sealing." J. Am. Coll. Surg., 194(1):S79-S87 (Jan. 2002).
Grossi A.E. et al., "Impact of Minimally Invasive Valvular Heart Surgery: A Case-Control Study", Ann. Thorac. Surg., 71:807-810 (Mar. 2001).
Gummert J.F. et al., Cardiac Surgery in Germany During 2006: A Report on Behalf of the German Society for Thoracic and Cardiovascular Surgery, Thorac. Cardiov. Surg., vol. 55, (Sep. 2007), pp. 343-350.
Gummert J.F. et al., "Cardiac Surgery in Germany During 2007: A Report on Behalf of the German Society for Thoracic and Cardiovascular Surgery," Thorac. Cardiov. Surg., vol. 56, (Sep. 2008), pp. 328-336.
Hanzel G.S., et al., "Complications of Percutaneous Aortic Valve Replacement: Experience with the Cribier-Edwards TM Percutaneous Heart Valve," EuroIntervention Supplements, 2006, vol. 1(A), pp. A3-A8.
Heinrich R.S., et al., "Experimental analysis of fluid mechanical energy losses in aortic valve stenosis: importance of pressure recovery", Ann Biomed Eng., Nov.-Dec. 1996, vol. 24(6), pp. 685-694.
Hijazi Z.M., "Transcatheter Valve Replacement: A New Era of Percutaneous Cardiac Intervention Begins", J. of Am. College of Cardio., Nov. 6, 2004, vol. 43, No. 6, pp. 1088-1089.
Hourihan M., et al., "Transcatheter Umbrella Closure of Valvular and Paravalvular Leaks", JACC, Boston, Massachusetts, 20(6):1371-1377 (Nov. 1992).
Huber C.H., et al., "Direct Access Valve Replacement (DAVR)—are we entering a new era in cardiac surgery?" European Journal of Cardio-thoracic Surgery, vol. 29, Jan. 19, 2006, pp. 380-385.
Huber C.H., et al., "Direct-Access Valve Replacement: A Novel Approach for Off-Pump Valve Implantation Using Valved Stents," Journal of the American College of Cardiology, Jul. 19, 2005, vol. 46(2), pp. 366-370.
Huber C.H., et al., "Do Valved Stents Compromise Coronary Flow?," European Journal of Cardio-thoracic Surgery, Jan. 23, 2004, vol. 25, pp. 754-759.
Ing F., "Stents: What's Available to the Pediatric Interventional Cardiologist?" Catheterization and Cardiovascular Interventions, 57:374-386 (Jun. 2002).
International Search Report dated Dec. 29, 2003 in Intl PCT Patent Appl. U.S. Appl. No. PCT/DE2003/002669.
International Preliminary Report on Patentability for Appl. No. PCT/IB2017/052718, dated Nov. 22, 2018, 11 pages.
International Search Report and Written Opinion for PCT Application No. PCT/EP2009/052230 dated Jun. 29, 2009, 12 pages.
International Search Report and Written Opinion for PCT Application No. PCT/EP2010/052429 dated Jun. 14, 2010, 12 pages.
International Search Report and Written Opinion for PCT Application No. PCT/EP2011/002524 dated Apr. 23, 2012, 15 pages.
International Search Report and Written Opinion for PCT Application No. PCT/EP2011/052674 dated Jul. 5, 2011, 12 pages.
International Search Report for PCT Application No. PCT/US1999/020736dated Jan. 28, 2000, 3 pages.
International Search Report and Written Opinion for PCT Application No. PCT/EP2009/050762 dated Jun. 23, 2009, 12 pages.
International Search Report & Written Opinionmailed Jul. 18, 2016 for PCT Patent Appl No. PCT/EP2016/059839, 10 pages.
International Search Report and Written Opinion for Appl. No. PCT/EP2016/055783, mailed on May 30, 2016, 15 pages.
International Search Report and Written Opinion for Application No. PCT/EP2013/057431 dated Jul. 26, 2013, 9 pages.
International Search Report and Written Opinion for Application No. PCT/IB2018/050438 mailed Apr. 12, 2018, 11 pages.
International Search Report and Written Opinion for International Application No. PCT/EP2010/063306, dated Nov. 17, 2010, 9 pages.
International Search Report and Written Opinion for PCT Application No. PCT/EP2006/010519 dated Mar. 1, 2007, 13 pages.
International Search Report and Written Opinion for PCT Application No. PCT/US06/36286 dated Jul. 9, 2007, 4 pages.
International Search Report and Written Opinion for PCT Application No. PCT/US2004/041513 dated Jun. 10, 2005, 4 pages.
International Search Report and Written Opinion for PCT Application No. PCT/US2004/043607 dated Mar. 20, 2006, 4 pages.
International Search Report and Written Opinion for PCT Application No. PCT/US2005/020947 dated Oct. 6, 2005, 5 pages.
International Search Report and Written Opinion for PCT Application No. PCT/US2006/038352 dated May 19, 2008, 4 pages.
International Search Report and Written Opinion for PCT Application No. PCT/US2006/043484 dated Jun. 25, 2008, 4 pages.
International Search Report and Written Opinion for PCT Application No. PCT/US2007/003992 dated Jan. 10, 2008, 5 pages.
International Search Report and Written Opinion for PCT Application No. PCT/US2007/02970 dated Oct. 19, 2007, 7 pages.
International Search Report and Written Opinion for PCT Application No. PCT/US2009/060531 dated May 13, 2010, 6 pages.
International Search Report and Written Opinion for PCT/DE2006/000056 dated Jun. 7, 2006, 11 pages.
International Search Report and Written Opinion for PCT/EP2007/061117 dated May 20, 2008, 16 pages.
International Search Report and Written Opinion for PCT/EP2008/003803 dated Aug. 20, 2008, 10 pages.
International Search Report and Written Opinion for PCT/EP2009/055958 dated Oct. 21, 2009, 8 pages.
International Search Report and Written Opinion for PCT/EP2010/056558 dated Oct. 7, 2010, 14 pages.
International Search Report and Written Opinion for PCT/EP2012/067617 dated Dec. 19, 2012, 10 pages.
International Search Report and Written Opinion for PCT/IL2007/001149 dated May 1, 2008, 4 pages.
International Search Report and Written Opinion for PCT/US2011/027730 dated May 25, 2011, 9 pages.
International Search Report and Written Opinion of the International Search Authority for International Application No. PCT/EP2008/064558, date of completion of report is Mar. 18, 2009, 14 pages.
International Search Report for Application No. PCT/DE2001/000837, dated Aug. 7, 2001, 4 pages.
International Search Report for Application No. PCT/EP2006/012455, mailed Sep. 27, 2007, 5 pages.
International Search Report for Application No. PCT/EP2010/057798, dated Sep. 12, 2010, 6 pages.
International Search Report for Application No. PCT/EP2011/058506, mailed Nov. 3, 2011, 4 pages.
International Search Report for Application No. PCT/EP2011/066677, dated Feb. 17, 2012, 7 pages.
International Search Report for Application No. PCT/EP2012/067617 mailed Dec. 19, 2012, 3 pages.
International Search Report for Application No. PCT/EP2012/067714 dated Dec. 18, 2012, 3 pages.
International Search Report for Application No. PCT/EP2013/073318, dated Apr. 17, 2014, 5 pages.
International Search Report for Application No. PCT/EP2014/065817, mailed Jan. 7, 2015, 6 pages.

(56) **References Cited**

OTHER PUBLICATIONS

International Search Report for Application No. PCT/EP2016/055783, mailed on May 30, 2016, 5 pages.
International Search Report for Application No. PCT/EP2016/058532, dated Jul. 11, 2016, 4 pages.
International Search Report for Application No. PCT/IB2008/002180, dated Apr. 15, 2009, 7 pages.
International Search Report for Application No. PCT/IB2018/050438 mailed Apr. 12, 2018, 3 pages.
International Search Report for PCT/DE2001/000836 dated Jun. 13, 2001, 6 pages.
International Search Report for PCT/EP2006/010023 dated Mar. 30, 2007, 6 pages.
International Search Report for PCT/EP2007/007413, mailed Jan. 28, 2008, 4 pages.
International Search Report for PCT/IB2017/052718, dated Sep. 5, 2017, 4 pages.
Kato et al., "Traumatic Thoracic Aortic Aneurysm: Treatment with Endovascular Stent-Grafts." Radiol., 205:657-662 (Dec. 1997).
Khambadkone S., et al., "Nonsurgical Pulmonary Valve Replacement: Why, When, and How?," Catheterization and Cardiovascular Interventions, United States, Jul. 2004, vol. 62, pp. 401-408.
Khambadkone S., et al., "Percutaneous Implantation of Pulmonary Valves," Expert Review of Cardiovascular Therapy (England), Nov. 2003, vol. 1(4), pp. 541-548.
Khambadkone S., et al., "Percutaneous Pulmonary Valve Implantation: Early and Medium Term Results," Circulation, Oct. 28, 2003, vol. 108(17), p. IV-375.
Klein A.L., et al., "Age-related Prevalence of Valvular Regurgitation in Normal Subjects: A Comprehensive Color Flow Examination of 118 Volunteers," Journal of the American Society of Echocardiography, vol. 3, No. 1, (Jan. 1990), pp. 54-63.
Knudsen et al., "Catheter-implanted prosthetic heart valves", Intl J. of Art. Organs, 16(5): 253-262, May 1993.
Kort et al., "Minimally Invasive Aortic Valve Replacement: Echocardiographic and Clinical Results." Am. Heart J., Sep. 2001, vol. 142(3), pp. 476-481.
Kuzela L., et al., "Experimental evaluation of direct transventricular revascularization," Journal of Thoracic and Cardiovascular Surgery, 57(6):770-773 (Jun. 1969).
Laborde et al., "Percutaneous Implantation of the Corevalve Aortic Valve Prosthesis for Patients Presenting High Risk for Surgical Valve Replacement," EuroIntervention, 1(4):472-474 (Feb. 2006).
Lawrence et al., "Percutaneous Endovascular Graft: Experimental Evaluation", Radiology, May 1987, vol. 163(2), pp. 357-360.
Levi et al., "Future of Interventional Cardiology in Pediactrics." Current Opinion in Cardiol., 18:79-90 (Mar. 2003).
Levy, "*Mycobacterium chelonei* Infection of Porcine Heart Valves." The New England Journal of Medicine, Washington DC, 297(12), Sep. 22, 1977, pp. 667-668.
Lichtenstein et al., "Transapical Transcatheter Aortic Valve Implantation in Humans: Initial Clinical Experience", circulation, American Heart Association vol. 114, Jul. 31, 2006, pp. 591-596.
Lichtenstein, S.V., "Closed heart surgery: Back to the future" The Journal of Thoracic and Cardiovascular Surgery, vol. 131(5), May 2006, pp. 941-943.
Liu et al., "Effect of Fiber Orientation on the Stress Distribution within a Leaflet of a Polymer Composite Heart Valve in be Closed Position", Journal of Biomechanics, 4:1099-1106 (Jan. 2007).
Lonescu et al., "Prevalence and Clinical Significance of Incidental Paraprosthetic Valvar Regurgitation: A prospective study using transesophageal echocardiography." Heart, 89:1316-21 (Oct. 2003).
Love S.C. et al., The Autogenous Tissue Heart Valve: Current Status, Journal of Cardiac Surgery, , Mar. 1991, vol. 6(4), pp. 499-507.
Lutter G., et al., "Percutaneous Aortic Valve Replacement: An Experimental Study. I. Studies on Implantation," Journal of Thoracic and Cardiovascular Surgery, Apr. 2002, vol. 123(4), pp. 768-776.
Lutter G., et al., "Percutaneous Valve Replacement: Current State and Future Prospects," Annals of Thoracic Surgery, Netherlands, Dec. 2004, vol. 78, pp. 2199-2206.
Ma L., et al., "Double-Crowned Valved Stents for Off-Pump Mitral Valve Replacement," European Journal of Cardio-Thoracic Surgery, Jun. 13, 2005, vol. 28(2), pp. 194-199.
Mack, M.J., "Minimally invasive cardiac surgery", Surg Endosc, 20:S488-S492 (Mar. 2006).
Magovern et al., "Twenty-five-Year Review of the Magovern-Cromie Sutureless Aortic Valve", Ann. Thorac. Surg., 48:S33-S334 (Jan. 1989).
Maraj et al., Evaluation of Hemolysis in Patients with Prosthetic Heart Valves, Clin. Cardiol. 21:387-392 (Jun. 1998).
Marcus RH et al., "Assessment of small-diameter aortic mechanical prostheses: physiological relevance of the Doppler gradient, utility of flow augmentation, and limitations of orifice area estimation," Circulation, 98(9):866-872 (Sep. 1998).
McKay G. R et al., "The Mansfield Scientific Aortic Valvuloplasty Registry: Overview of Acute Hemodynamic Results and Procedural Complications." J. Am. Coll. Cardiol., 17(2):485-491 (Feb. 1991).
Mills N.L., et al., "Valvulotomy of valves in the saphenous vein graft before coronary artery bypass," The Journal of Thoracic and Cardiovascular Surgery, 71(6):878-879 (Jun. 1976).
Mirich et al., "Percutaneously Placed Endovascular Grafts for Aortic Aneurysms: Feasibility Study", Radiology, 170:1033-1037 (Mar. 1989).
Moazami N et al. "Transluminal Aortic Valve Placement: a Fesibility Study with a Newly Designed Collapsible Aortic Valve", ASAIO Journal, vol. 42, No. 2, Mar.-Apr. 1996.
Moulopoulos et al., "Catheter-Mounted Aortic Valves," Annals of Thoracic Surg., vol. 11, No. 5, May 1971, pp. 423-430.
Munro I., et al., "The possibility of myocardial revascularization by creation of a left ventriculocoronary artery fistula," The Journal of Thoracic and Cardiovascular Surgery, 58(1):25-32 (Jul. 1969).
Nath J., et al., Impact of Tricuspid Regurgitation on Long-term Survival, Journal of the American College of Cardiology, 43(3):405-406 (Feb. 2004).
Nietlispach F., et al., "Current Balloon-Expandable Transcatheter Heart Valve and Delivery Systems", Catheterization and Cardiovascular Interventions, 75:295-300 (Sep. 2009).
Palacios I.F., "Percutaneous Valve Replacement and Repair: Fiction or Reality?," Journal of American College of Cardiology, Oct. 2004, vol. 44(8), pp. 1662-1663.
Palmaz J.C., et al., "Expandable Intrahepatic Portacaval Shunt Stents: Early Experience in the Dog," American Journal of Roentgenology, 145 (4):821-825 (Oct. 1985).
Palmaz J.C., et al., "Expandable Intrahepatic Portacaval Shunt Stents in Dogs with Chronic Portal Hypertension," American Journal of Roentgenology, 147(6):1251-1254 (Dec. 1986).
Paniagua et al., "Percutaneous Heart Valve in the Chronic in Vitro Testing Model." Circulation, Sep. 17, 2002, vol. 106: e51-e52.
Parodi J.C., et al., "Transfemoral Intraluminal Graft Implantation for Abdominal Aortic Aneurysms", Ann. Vasc. Surg., 5(6):491-499 (Nov. 1991).
Pavcnik D., et al., "Aortic and Venous Valve for Percutaneous Insertion," Minimally Invasive Therapy & Allied Technologies, Jan. 2000, vol. 9(3/4), pp. 287-292.
Pavcnik D., et al., "Development and Initial Experimental Evaluation of a Prosthetic Aortic Valve for Transcatheter Placement." Radiology, 183:151-154 (Apr. 1992).
Pavcnik et al., "Percutaneous Bioprosthetic Venous Valve: A Long-term Study in Sheep," Jounal of Vascular Surg., vol. 35, No. 3, Mar. 2002, pp. 598-603.
Pawelec-Wojtalk M., "Closure of left ventricle perforation with the use of muscular VSD occluder," European Journal of Cardia-Thoracic Surgery, 27(4):714-716 (Apr. 2005).
Pelton A.R., et al., "Medical Uses of Nitinol," Materials Science Forum, Jan. 2000, vol. 327-328, pp. 63-70.
Phillips et al., "A Temporary Catheter-Tip Aortic Valve: Hemodynamic Effects on Experimental Acute Aortic Insufficiency", Annals of Thoracic Surg., Feb. 1976, 21(2), pp. 134-136.

(56) **References Cited**

OTHER PUBLICATIONS

Phillips S.J., et al., "Improvement in Forward Coronary Blood Flow by Using a Reversed Saphenous Vein with a Competent Valve," The Annals of Thoracic Surgery, vol. 21 (1), Jan. 1976, pp. 12-15.
Raillat et al., "Treatment of Iliac Artery Stenosis with the Wallstent Endoprosthesis." AJR, Mar. 1990, vol. 154(3), pp. 613-616.
Remadi et al., "Preliminary results of 130 aortic valve replacements with a new mechanical bileaflet prosthesis: The Edwards MIRA valve," Interactive Cardiovasc. and Thorac. Surg., 2:80-83 (Mar. 2003).
Rogers J.H., et al., "The Tricuspid Valve: Current Perspective and Evolving Management of Tricuspid Regurgitation," Circulation, 119(20):2718-2725 (May 2009).
Ruiz C.E., "Transcatheter Aortic Valve Implantation and Mitral Valve Repair: State of the Art," Pediatric Cardiology, Jun. 2005, vol. 26(3), pp. 289-294.
Saliba Z., et al., "Treatment of Obstructions of Prosthetic Conduits by Percutaneous Implantation of Stents," Archives Des Maldies Du Coeur Et Des Vaisseaux, May 1999, pp. 591-596.
Schurink et al., "Stent Attachment Site—related Endoleakage after Stent Graft Treatment: An in vitro study of the effects of graft size, stent type, and atherosclerotic wall changes", J. Vasc. Surg., vol. 30(4), Oct. 1999, pp. 658-667.
Sochman et al., "Percutaneous Transcatheter Aortic Disc Valve Prosthesis Implantation: A Feasibility Study." Cardiovasc. Intervent. Radiol., Sep. 2000, 23: 384-388.
Stanley et al., "Evaluation of Patient Selection Guidelines for Endoluminal AAA Repair With the Zenith Stent Graft: The Australasian Experience." J. Endovasc. Ther., 8:457-464 (Oct. 2001).
Stassano P., et al., "Mid-term Results of the Valve-on-Valve Technique for Bioprosthetic Failure," European Journal of Cardiothoracic Surgery, Oct. 2000, vol. 18, pp. 453-457.
Stein D.P., et al., "Turbulent blood flow in the ascending aorta of humans with normal and diseased aortic valves", Circulation Research by American Heart Association, 39:58-65 (Jul. 1976).
Steinhoff et al., "Tissue Engineering of Pulmonary Heart Valves on Allogenic Acellular Matrix Conduits." Circulation102 [suppl. III], pp. III-50-III-55 (Nov. 2000).
Thompson et al., "Endoluminal stent grafting of the thoracic aorta: Initial experience with the Gore Excluder," Journal of Vascular Surgery, Jun. 2002, pp. 1163-1170.
Topol, Eric., Textbook of Interventional Cardiology, 4th Ed; Chapter 24: "Endovascular Options For Peripheral Arterial Occlusive and Aneurysmal Disease," Saunders, pp. 499-503, 949-953 (Dec. 2003).
Triennial Review of the National Nanotechnology Initiative: "A Matter of Size", The National Academies Press, Washington DC, V-13, Retrieved from the Internet: URL: http://www.nap.edu/catalog/11752/a-matter-of-size-triennial-review-of-the-national-nanotechnology, 200 pages (Mar. 2006) (Parts 1-5).
Vahanian et al., "Percutaneous Approaches to Valvular Disease", Circulation, Apr. 6, 2004, 109: 1572-1579.
Van Herwerden et al., "Percutaneous Valve Implantation: Back to the Future?", Euro. Heart J., Sep. 2002, 23(18): 1415-1416.
Walther et al., "Transapical approach for sutureless stent-fixed aortic valve implantation: experimental results", European Journal of Cardio-thoracic Surgery 29, 703-708 (May 2006).
Webb J.G., et al., "Percutaneous Aortic Valve Implantation Retrograde from the Femoral Artery," Circulation, American Heart Association, Feb. 14, 2006, vol. 113, pp. 842-850.
Weerasinghe A., et al., "First Redo Heart Valve Replacement: A 10-Year Analysis," Circulation, 99(5):655-658 (Feb. 1999).
Weyman AB et al., "Aortic Stenosis: Physics and Physiology-What Do the Numbers Really Mean?", Rev Cardiovasc Med., 6(1):23-32 (Jan. 2005).
White et al., "Endoleak as a Complication of Endoluminal Grafting of Abdominal Aortic Aneurysms: Classification, Incidence, Diagnosis, and Management," J. Endovasc. Surg., 4:152-168 (May 1997).
Yonga G.O., et al., "Percutaneous Transvenous Mitral Commissurotomy in Juvenile Mitral Stenosis", East African Medical Journal, 80(4):172-174 (Apr. 2003).
Yoshioka et al., "Self-Expanding Endovascular Graft: An Experimental Study in Dogs." AJR 151, Oct. 1988, pp. 673-676.
Zhou et al., "Self-expandable Valved Stent of Large Size: Off-Bypass Implantation in Pulmonary Position", Eur. J. Cardiothorac, Aug. 2003, 24: 212-216.
EPO Communication of a Notice of Opposition in EP Patent No. 3 730 094 dated Jan. 30, 2025 (363002).

* cited by examiner

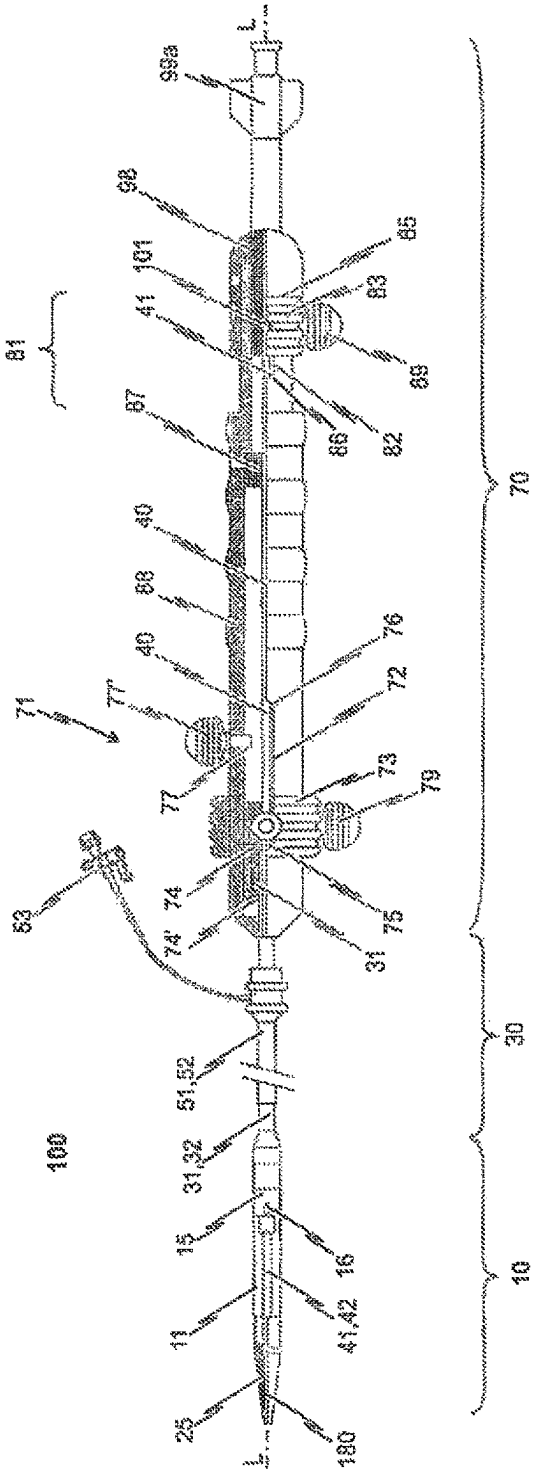
L
99a
98
101
41
81
87
40
88
40
71
77'
77
76
72
73
79
74
74'
75
31
53
51,52
31,32
100
15
16
11
41,42
25
180
L
85
83
89
86
82
70
30
10

Fig. 1

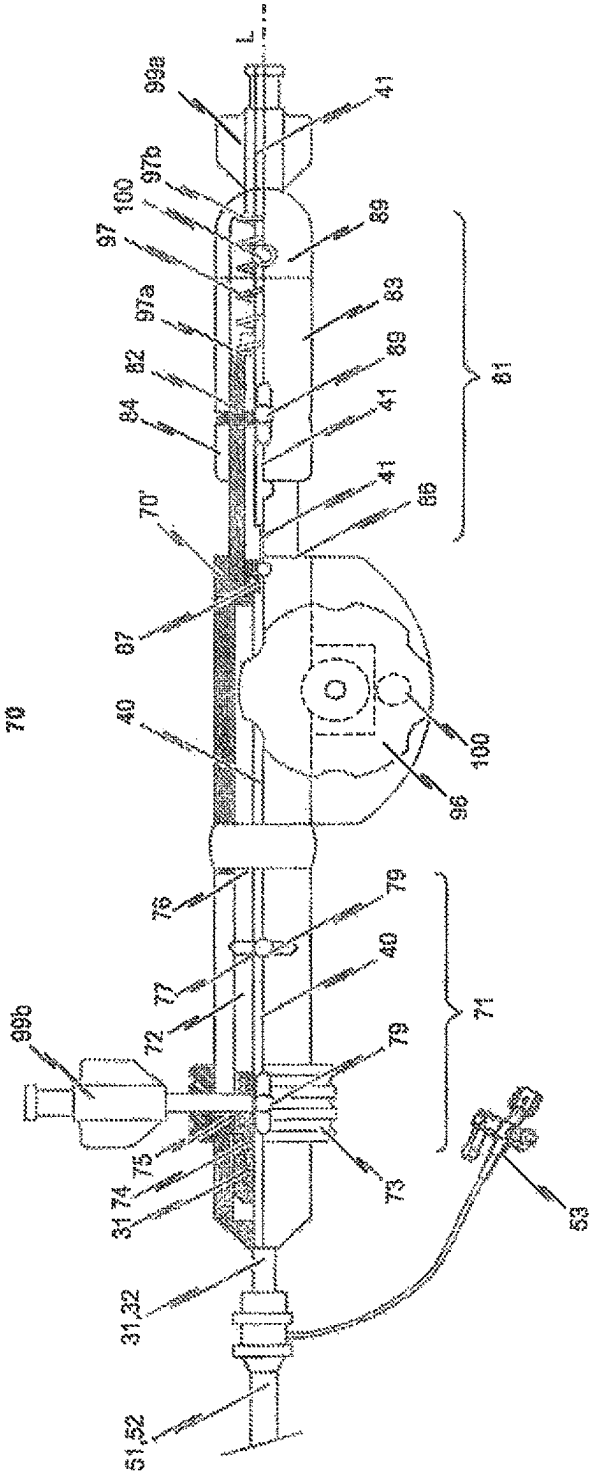
L
99a
41
97b
100
97
89
97a
83
82
89
84
41
81
41
86
70'
87
70
40
100
96
76
79
77
40
72
71
99b
79
75
74
31
73
53
31,32
51,52

Fig. 2

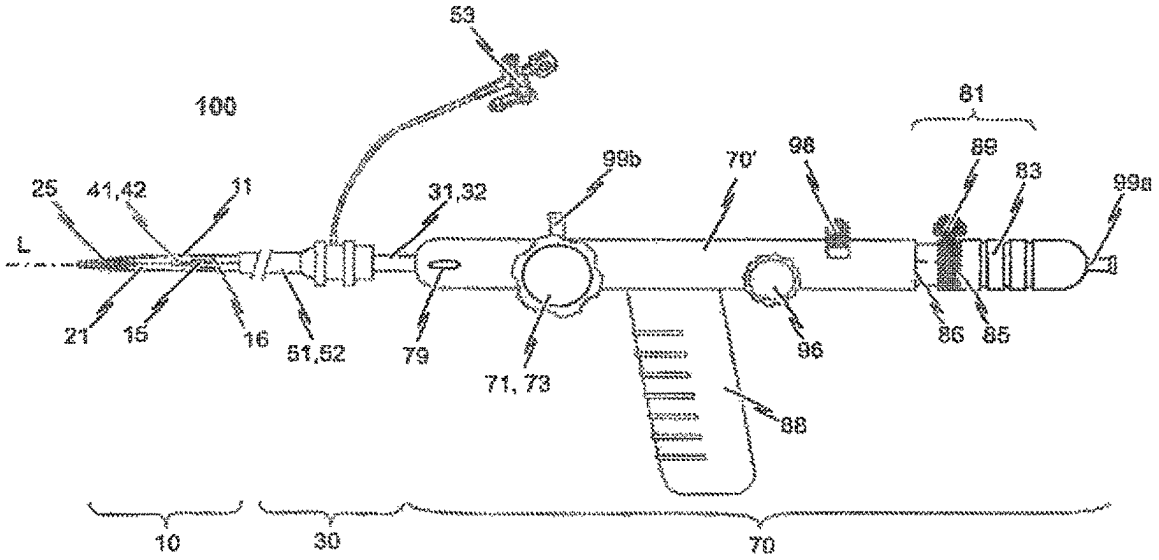
53
100
81
89
83
99a
99b
70'
98
25
41,42
11
31,32
L
21
15
16
51,52
79
71, 73
96
86
85
88
10
30
70

Fig. 3a

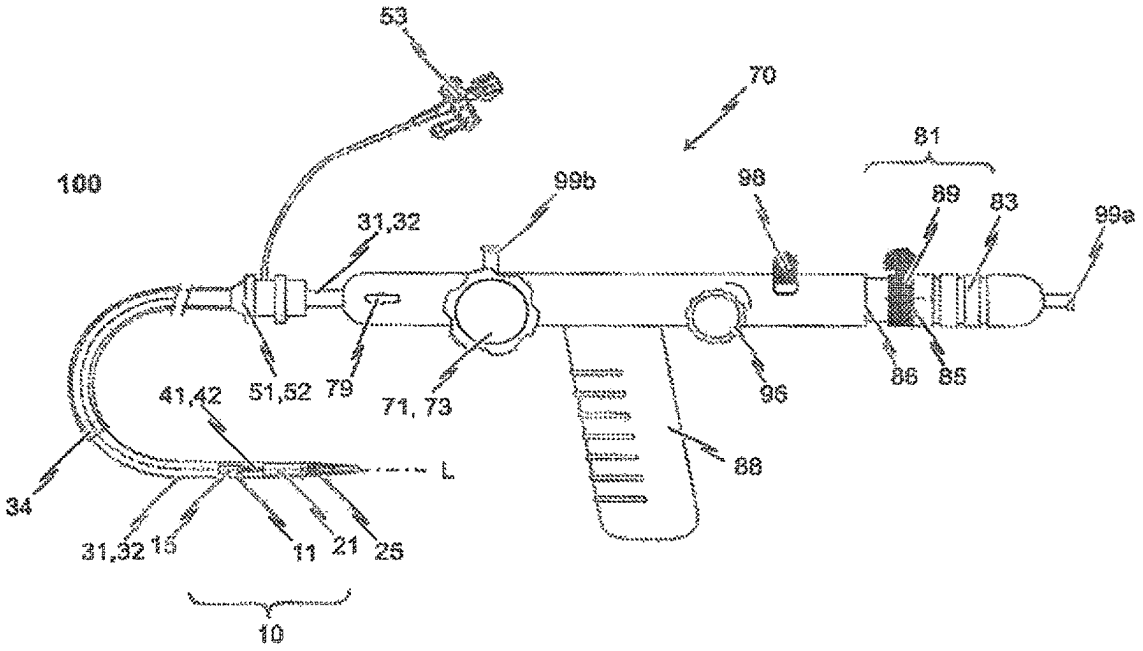
53
70
81
100
99b
98
89
83
99a
31,32
51,52
79
71, 73
96
86
85
41,42
L
88
34
31,32
15
11
21
25
10

Fig. 3b

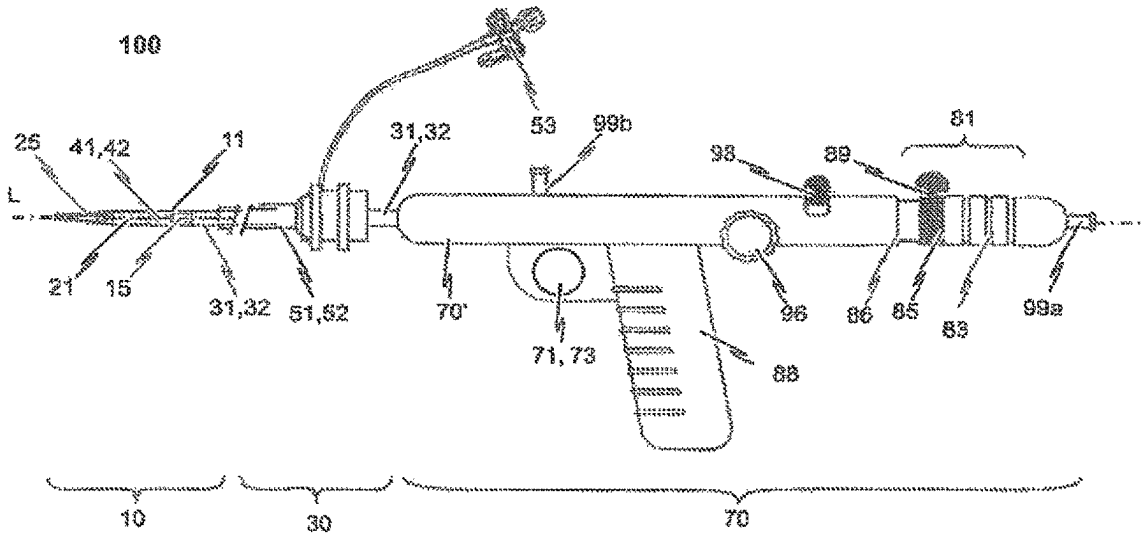
100
25
41,42
11
L
21
15
31,32
51,52
31,32
53
99b
70'
71,73
98
89
81
96
86
85
83
99a
88
10
30
70

Fig. 4

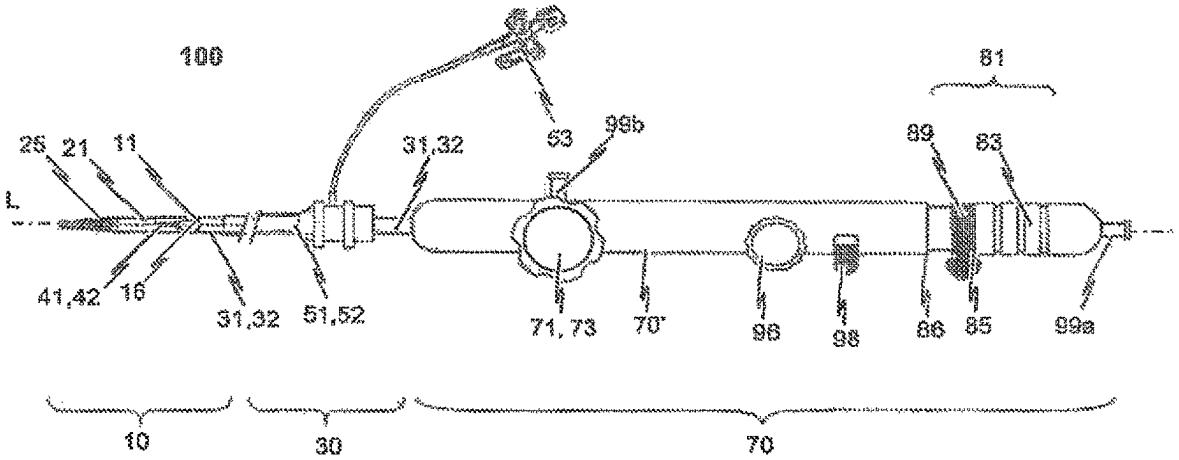
100
25
21
11
L
41,42
16
31,32
51,52
31,32
53
99b
71,73
70'
96
98
89
83
81
86
85
99a
10
30
70

Fig. 5

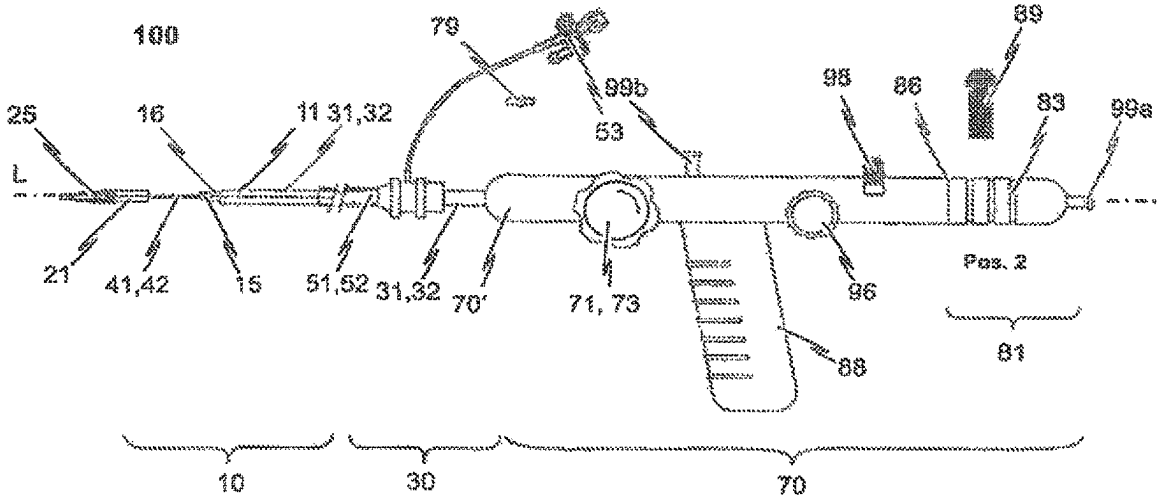
100
79
89
99b
98
86
83
99a
25
16
11
31,32
53
L
21
41,42
15
51,52
31,32
70'
71, 73
96
Pos. 2
81
88
10
30
70

Fig. 6a

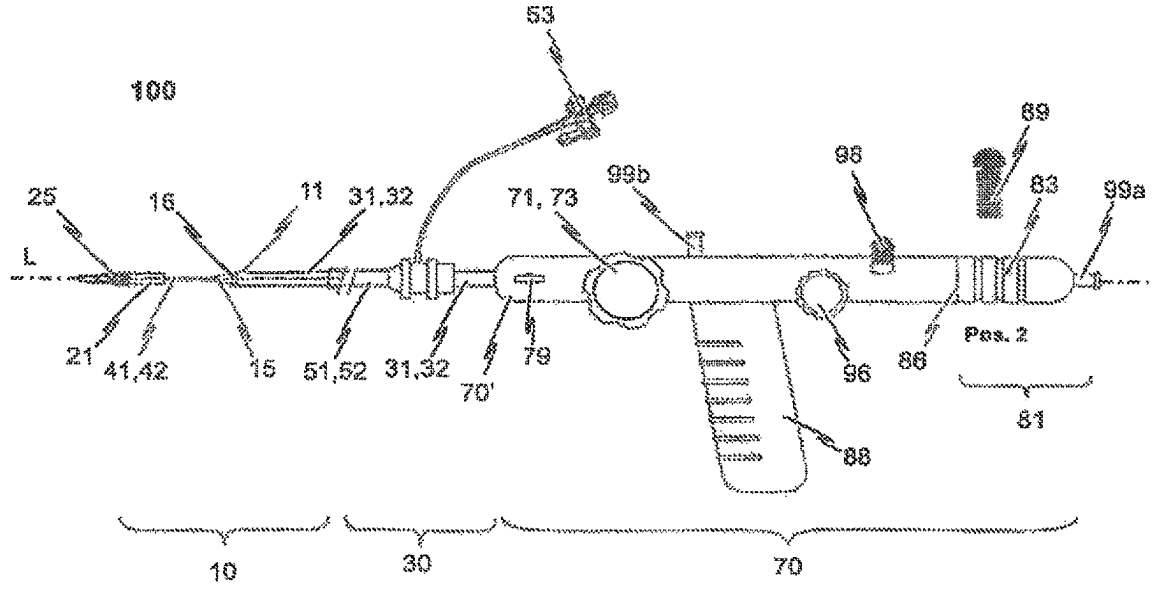
53
100
89
98
99b
83
99a
25
16
11
31,32
71, 73
L
21
41,42
15
51,52
31,32
79
70'
96
86
Pos. 2
81
88
10
30
70

Fig. 6b

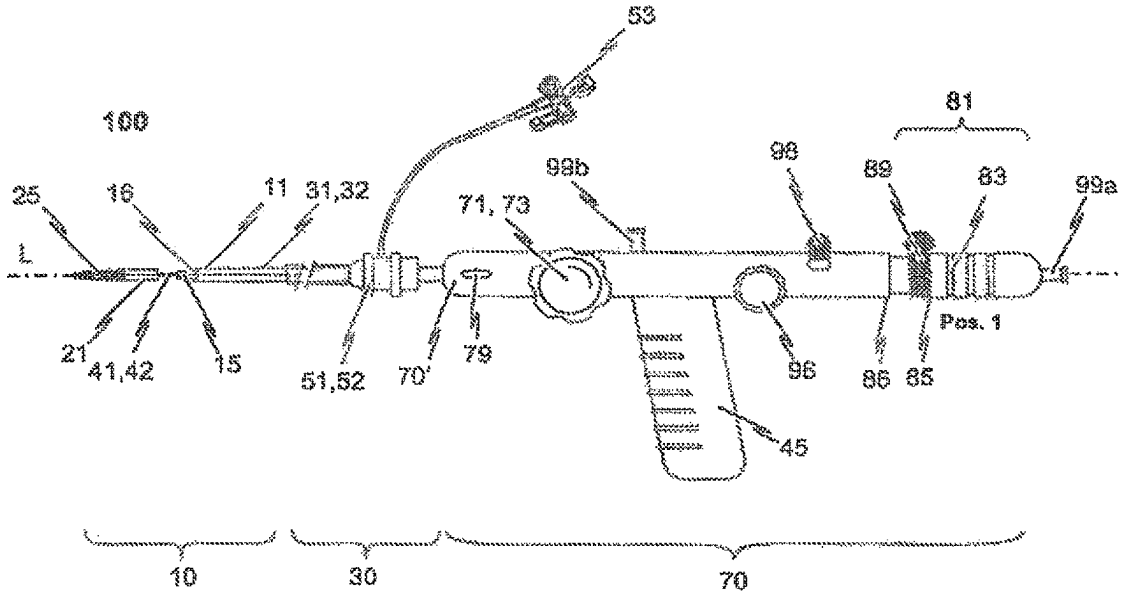
53
100
81
98
99b
89
83
99a
25
16
11
31,32
71, 73
L
21
41,42
15
51,52
70'
79
96
86
85
Pos. 1
45
10
30
70

Fig. 6c

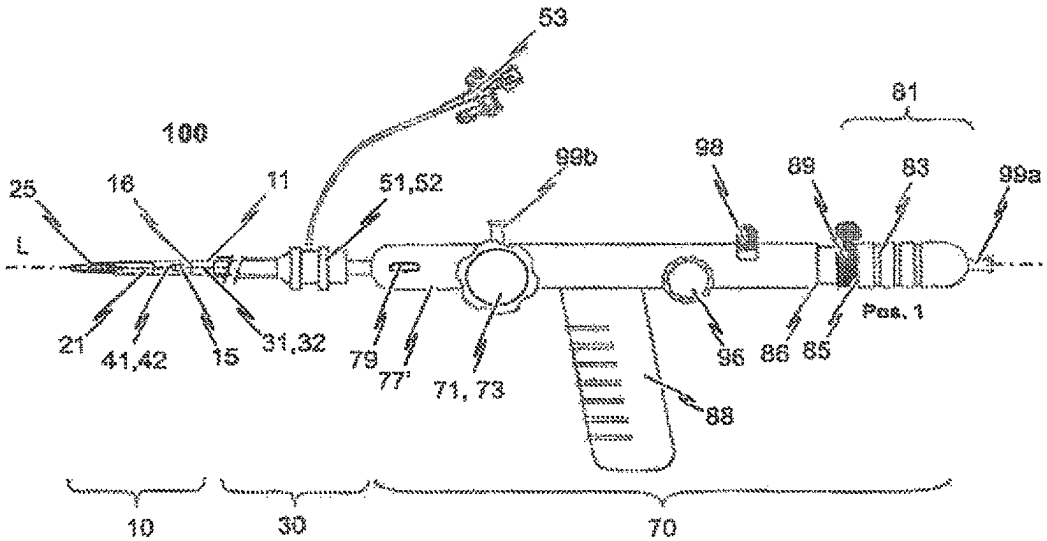
53
100
81
98
99b
89
83
99a
25
16
11
51,52
L
21
41,42
15
31,32
79
77'
71, 73
96
86
85
Pos. 1
88
10
30
70

Fig. 6d

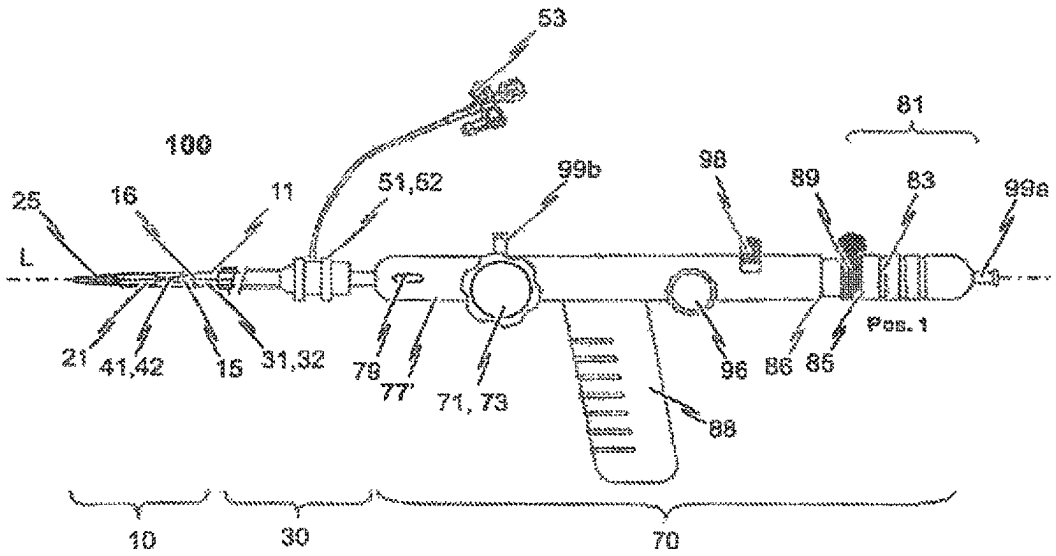
53
100
81
25
16
11
51,52
99b
98
89
83
99a
L
21
41,42
15
31,32
79
77'
71, 73
96
86
85
Pos. 1
88
10
30
70

Fig. 7a

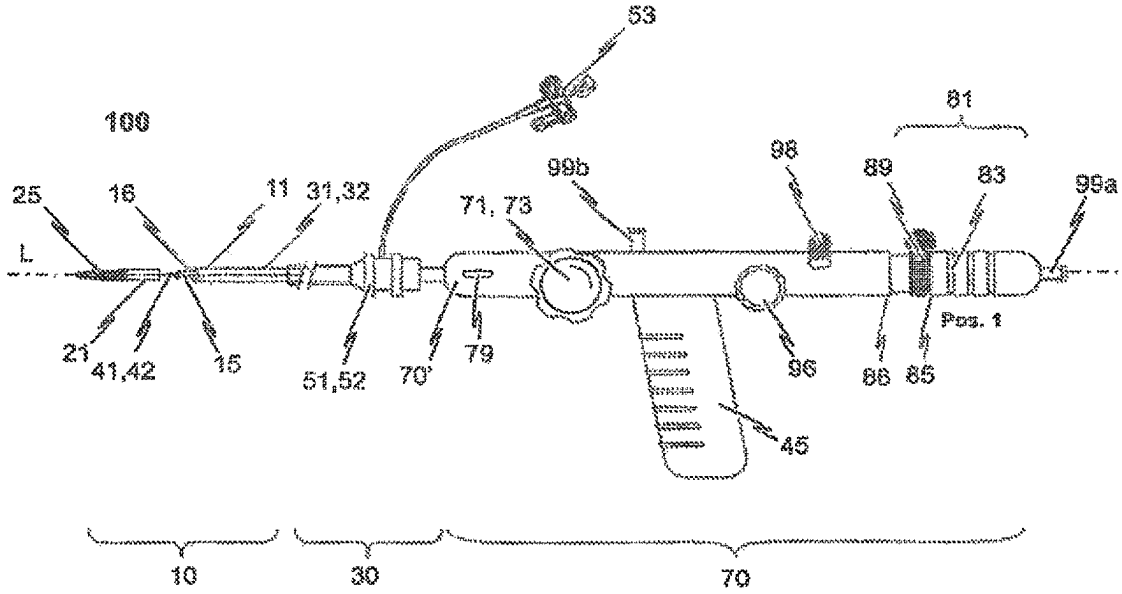
53
100
81
25
16
11
31,32
99b
98
89
83
99a
71, 73
L
21
41,42
15
51,52
70'
79
96
86
85
Pos. 1
45
10
30
70

Fig. 7b

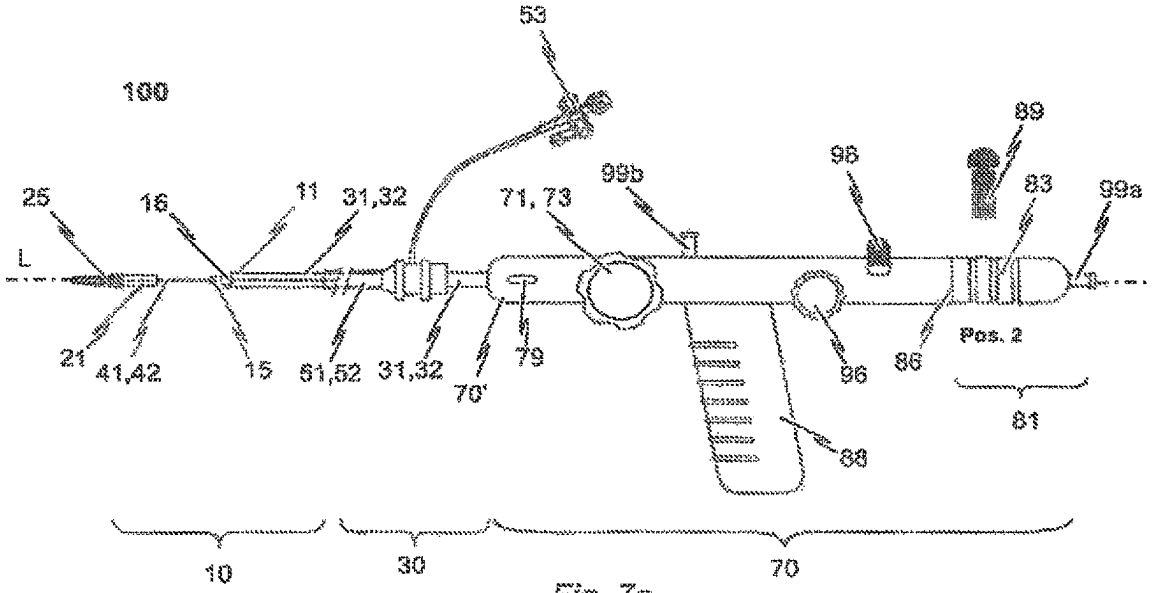
100
53
25
16
11
31,32
71, 73
99b
96
89
83
99a
L
21
41,42
15
51,52
31,32
70'
79
96
86
Pos. 2
81
88
10
30
70

Fig. 7c

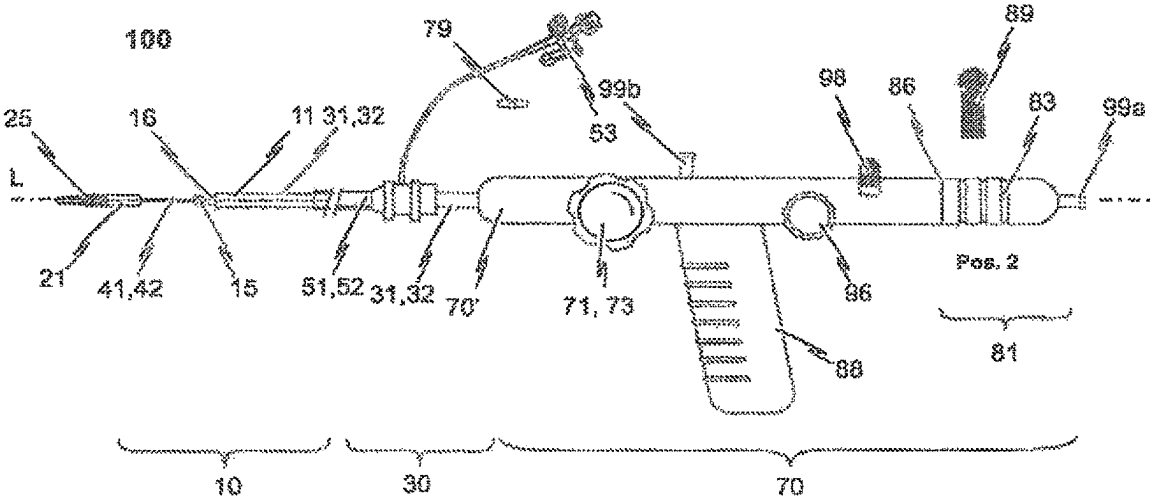
100
79
99b
53
98
86
89
83
99a
25
16
11 31,32
L
21
41,42
15
51,52
31,32
70'
71, 73
96
Pos. 2
81
88
10
30
70

Fig. 7d

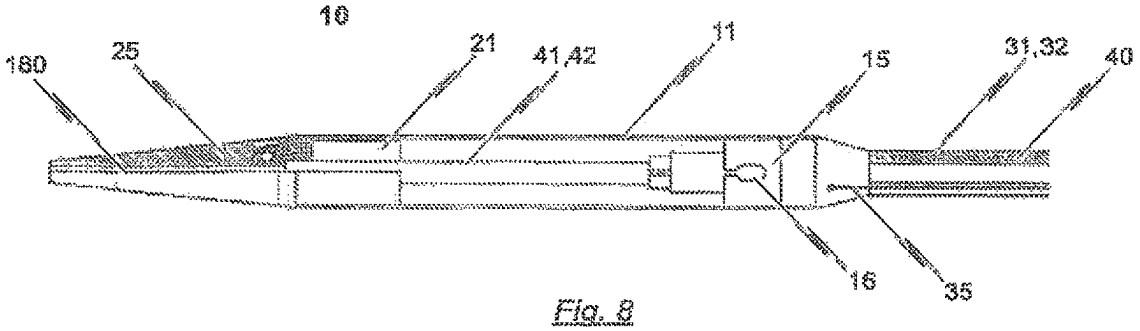

Fig. 8

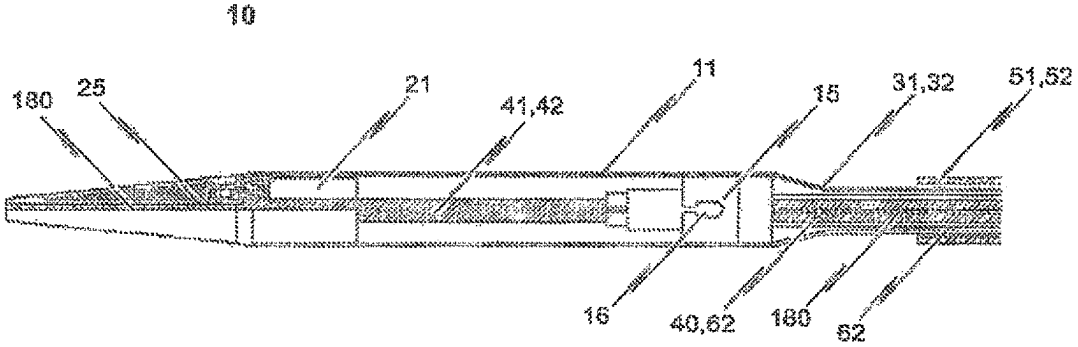

Fig. 9

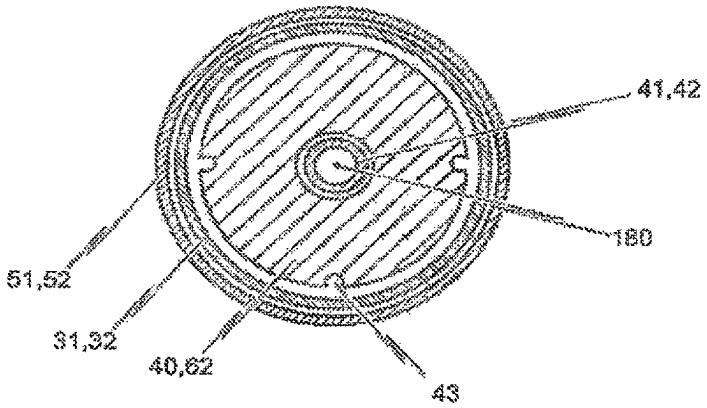

Fig. 10a

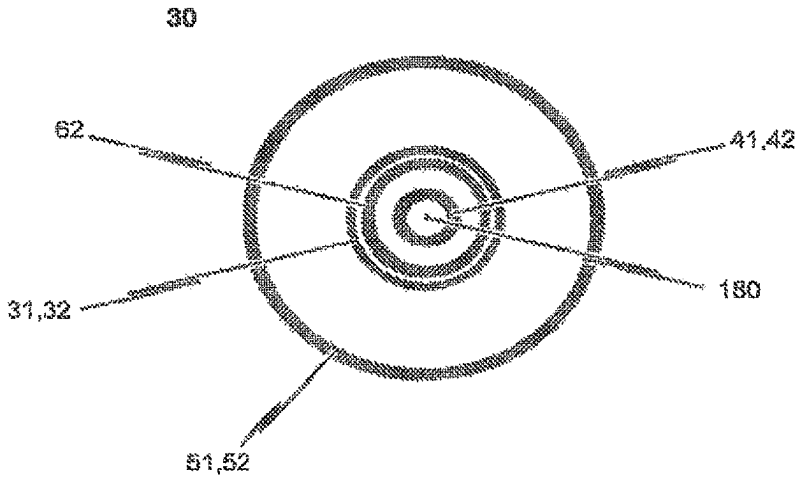

Fig. 10b

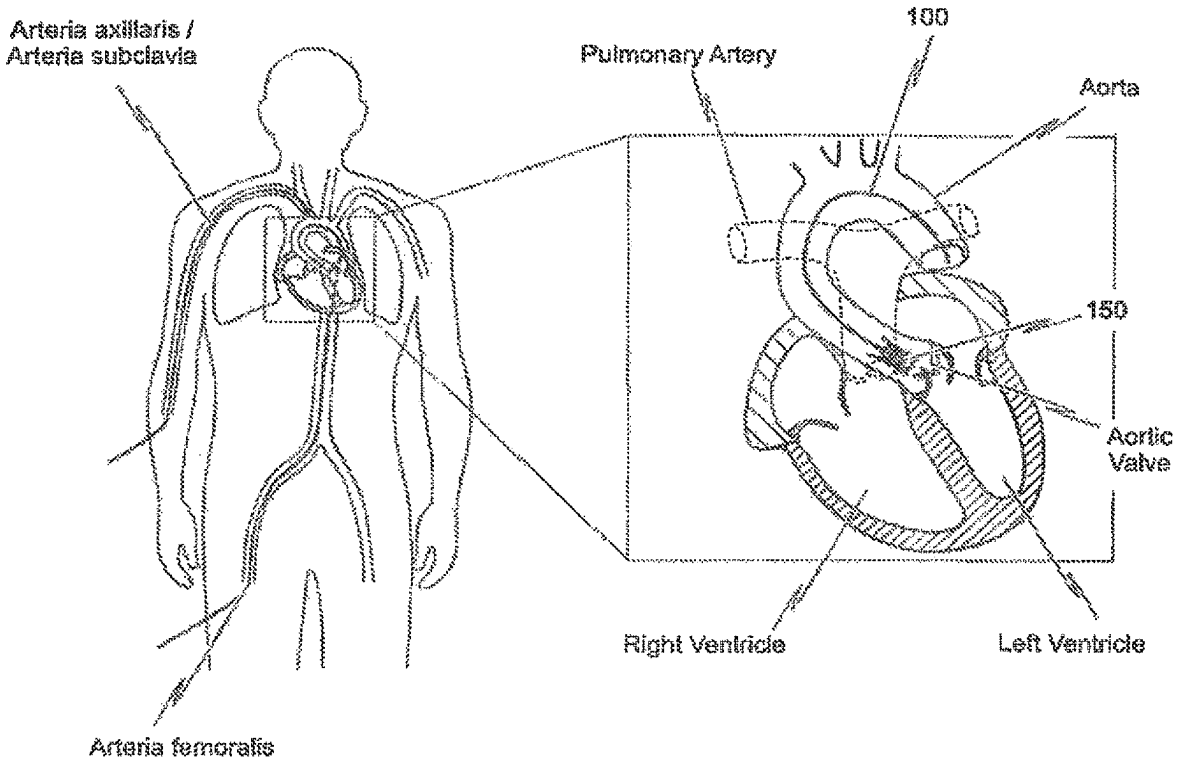
Arteria axillaris /
Arteria subclavia
Pulmonary Artery
100
Aorta
150
Aortic
Valve
Right Ventricle
Left Ventricle
Arteria femoralis

Fig. 11

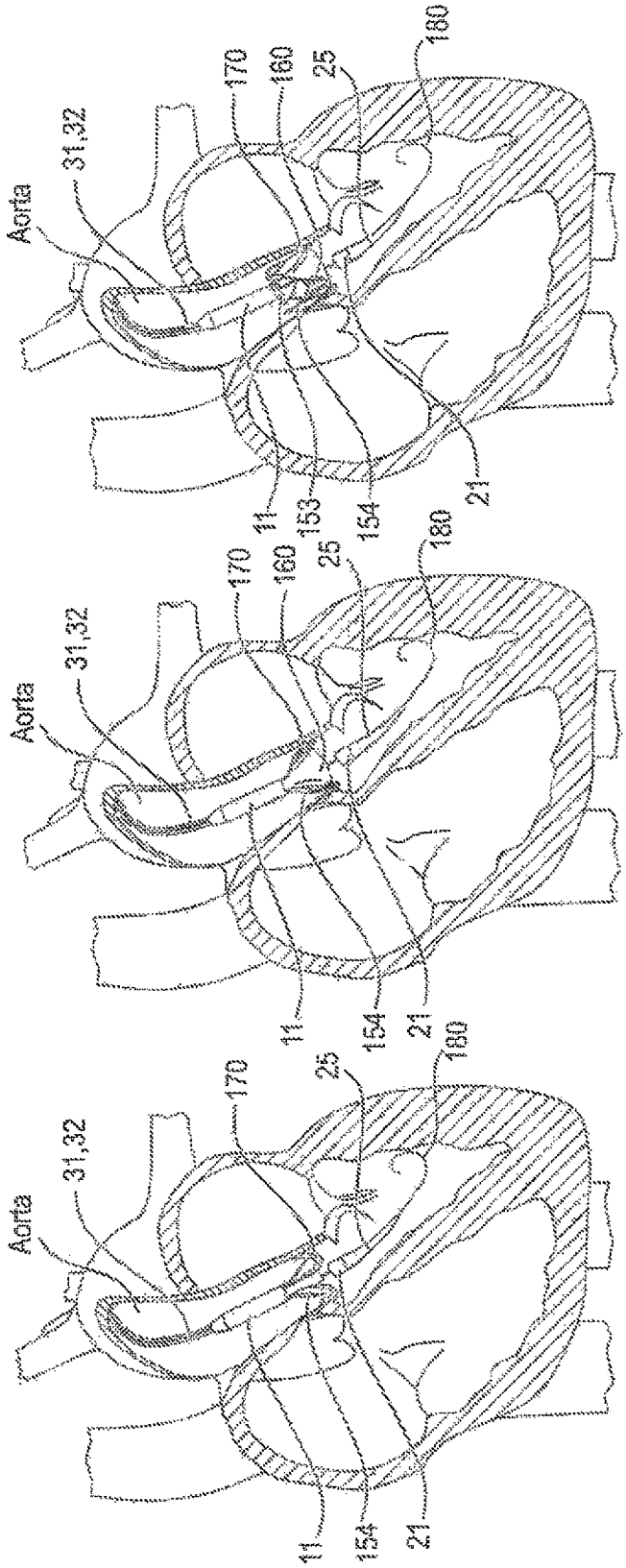

FIG. 12a

FIG. 12b

FIG. 12c

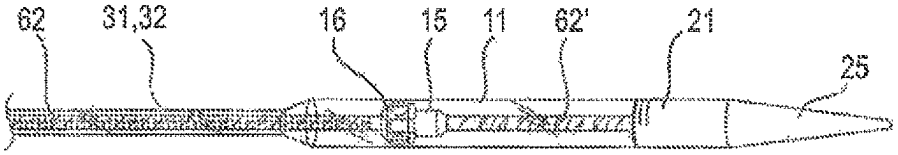

FIG. 13a

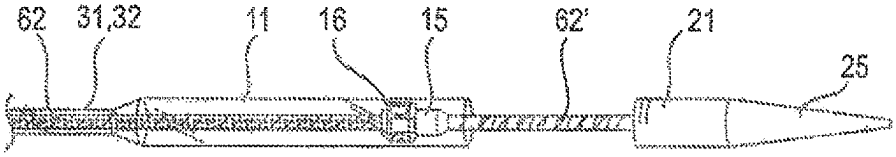

FIG. 13b

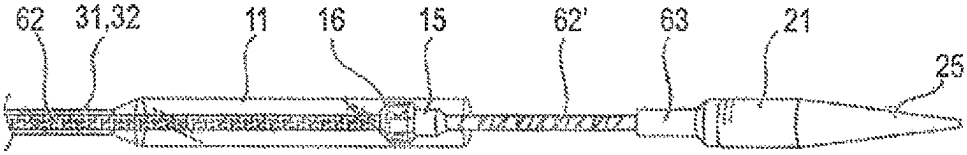

FIG. 13c

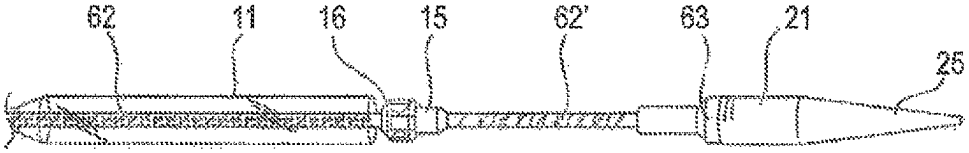

FIG. 13d

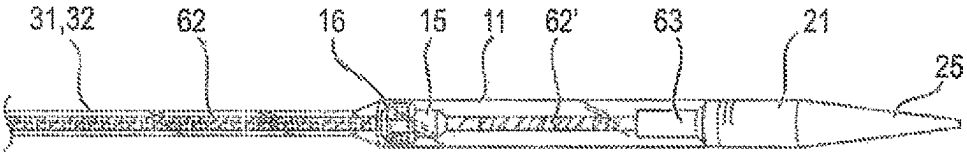

FIG. 13e

CATHETER SYSTEM FOR INTRODUCING AN EXPANDABLE STENT INTO THE BODY OF A PATIENT

CROSS-REFERENCE TO RELATED APPLICATIONS

This application is a continuation of U.S. application Ser. No. 16/390,120, filed on Apr. 22, 2019, now U.S. Pat. No. 11,147,669, which is a continuation of U.S. application Ser. No. 15/407,560, filed on Jan. 17, 2017, now U.S. Pat. No. 10,307,251, which is a continuation of U.S. application Ser. No. 13/698,910, filed on Mar. 18, 2013, now U.S. Pat. No. 9,597,182, which is a national phase application under 35 U.S.C. § 371 of PCT/EP2011/002524, filed on May 20, 2011, which is a continuation-in-part of U.S. patent application Ser. No. 12/801,090, filed on May 20, 2010, now U.S. Pat. No. 10,856,978, which claims the benefit of priority to European Application No. 10163478.0 filed on May 20, 2010, the entire contents of each of which are incorporated herein by reference.

SPECIFICATION

The present disclosure concerns a catheter system for introducing an expandable heart valve stent into the body of a patient. The disclosure further concerns an insertion system comprising a catheter system and a handle for inserting an expandable heart valve stent into the body of a patient, as well as a medical device for treatment of a heart valve defect, in particular a heart valve failure or a heart valve stenosis in a patient, wherein the medical device has an insertion system and an expandable heart valve stent accommodated in the catheter tip of the insertion system.

In medical technology, there has been an endeavor over a long period to close a heart valve defect, such as an aortic valve insufficiency or an aortic valve stenosis, non-surgically by means of a transarterial interventional access by catheter, thus technically without an operation. Various insertion systems and stent systems have been proposed, with different advantages and disadvantages, which in part can be introduced into the body of a patient transarterially by means of a catheter insertion system, though a specific system has not prevailed up to the present.

The term used here "heart valve stenosis and/or heart valve insufficiency" shall generally be understood here as a congenital or acquired functional disorder of one or several heart valves. A valve defect of this type can affect each of the four heart valves, whereby the valves in the left ventricle (aortic and mitrel valve) are certainly more frequently affected than those of the right heart (pulmonary and tricuspid valve). The functional disorder can result in narrowing (stenosis) or inability to close (insufficiency) or a combination of the two (combined cardiac defect).

With all known interventional systems for implantation of heart valve prosthesis, an expandable stent system is moved transarterially to an insufficient heart valve. A stent system of this type consists, for example, of a self-expanding or balloon-expanding anchoring support (also termed "heart valve stent" or "stent" in the following), to which the actual heart valve prosthesis is fastened, preferably at the distal retaining region of the anchoring support.

In the medical devices previously known from the state-of-the-art, however, it has become apparent that the implantation procedure of a stent system to which the heart valve prosthesis is attached is relatively complicated, difficult and expensive. Apart from the complicated implantation of the

heart valve prosthesis as a replacement for an insufficient native heart valve, there is the fundamental risk of incorrect positioning of the stent or heart valve prosthesis with the medical devices used up to the present, which cannot be corrected without more extensive operative intervention.

The problem addressed by the present disclosure is the fact that medical technology does not currently offer any insertion system in particular for transarterial or transfemoral implantation of a self- or balloon-expandable heart valve stent with a heart valve prosthesis attached to it in which, on the one hand, the insertion system enables a minimally invasive implantation of the heart valve prosthesis in a predictable manner and, on the other, dispensing with the need to use a heart-lung machine during the operation on the anaesthetized patient. Consequently the operative intervention can be designed to be especially cost-effective and, in particular, to reduce the physical and mental stress on the patient. In particular, there is a lack of a medical device for implantation of heart valve prostheses that can also be used for patients on whom, due to their age, an operation cannot be carried out without the aid of a heart-lung machine.

Because of the increasing number of patients requiring treatment, there is also a growing need for an insertion system with which a minimally invasive intervention can be made on a patient for treatment of a heart valve stenosis and/or heart valve insufficiency in a precisely predictable way, whereby the success of the operation is in particular no longer significantly dependent on the skill and experience of the heart surgeon or radiologist carrying out the treatment.

This situation also applies to operations in which heart valve prostheses with stent systems are implanted with the aid of a so-called balloon catheter system.

It is also regarded as problematic that, when using systems already known from the state-of-the-art by means of which a heart valve prosthesis can be implanted in the body of the patient with minimal invasiveness, incorrect positioning of the heart valve prosthesis or the associated heart valve stent can frequently only be avoided when the heart surgeon or radiologist is especially experienced. It is indeed known, for example, to insert a heart valve stent with a heart valve prosthesis attached to it into the body of a patient as far as the heart via the aorta, whereby self-expansion or balloon-expansion of the heart valve stent is initiated by external manipulation when the implantation location is reached, which should lead to a secure anchorage and precise positioning of the heart valve prosthesis; such heart valve stents cannot usually be removed in a simple way, however, and their position cannot usually be corrected once the stent has expanded.

Accordingly, there is basically a risk with the known systems that if, for example, the self-expansion or balloon-expansion of the heart valve stent with the attached heart valve prosthesis is initiated in a non-optimum position, due to a slip by the doctor carrying out the treatment or other technical circumstances such as stent foreshortening, this position can only be corrected appropriately by means of a major, in particular operative, intervention, which must frequently be carried out on the open heart.

For example, a heart valve stent for heart valve prosthesis is described in document WO 2004/019825 A1. With this heart valve stent, distal-end support arches or hoops and positioning arches or hoops are provided, which can be inserted into the pockets of the native heart valve of a patient so that the heart valve stent can be positioned by means of the support hoops. Additional so-called commissural hoops can also be formed on the known heart valve stent which, together with the support arches, clamp parts of the old heart

valve once the stent has unfolded to that the stent can be positioned and anchored as a result of this clamping action.

Although the support arches provided on the anchoring stent enable improved positioning of the heart valve prosthesis to be implanted, there is nevertheless still a risk of incorrect implantation and of the heart valve prosthesis being incapable of functioning correctly or functioning but unsatisfactorily. For example, it may be found during the intervention that the heart valve prosthesis or the heart valve stent is not optimally dimensioned for the patient. In such cases, even if only the respective distal support or positioning arches of the stent are in their expanded state, removal (explantation) or repositioning of the heart valve stent with the heart valve prosthesis is no longer possible and there exists an increased mortality risk for the particular patient.

The aortic arch in the human body represents a further problem for such interventions, since it has to be accessed during insertion through the aorta. When this is done, the catheter tip and the respective catheter must undergo a change of direction of approximately 180° over a relatively small radius, usually about 50 mm, without causing injury or damage to the vessel wall.

The objective of the disclosure is to propose a catheter system for introducing an expandable heart valve stent into the body of a patient and for positioning the stent at a desired implantation site, wherein the catheter system is designed to enable the implantation of a heart valve prosthesis attached to a heart valve stent in the optimum implantation location in a sequence of events defined before the intervention.

Secondly, the objective is to propose a medical device for treatment of a heart valve stenosis and/or heart valve insufficiency, comprising a catheter system and an expandable heart valve stent mounted in the catheter tip of the insertion system and which is designed to reduce the risk to the patient on implantation of the heart valve prosthesis.

In accordance with a preferred embodiment, the present disclosure provides a catheter system for introducing an expandable heart valve stent into the body of a patient, the catheter system comprising a catheter tip and a catheter shaft. The catheter tip of the catheter system has a seat portion for accommodating the stent to be introduced into the patient's body in its collapsed state. The catheter system has further a stent holder for realisably fixing the stent to the catheter tip. The seat portion of the catheter tip is constituted by a first sleeve-shaped member and a second sleeve-shaped member, said sleeve-shaped members being moveable relative to each other as well as relative to the stent holder of the catheter tip. The catheter shaft comprises first force transmitting means, second force transmitting means and guiding means. The distal end section of the first force transmitting means is connected to the first sleeve-shaped member of the catheter tip and the proximal end section of the first force transmitting means is connectable to a first operating means of a handle. The distal end section of the second force transmitting means is connected to the second sleeve-shaped member of the catheter tip and the proximal end section of the second force transmitting means is connectable to a second operating means of the handle.

Preferably, the cross-section of second sleeve-shaped member of the catheter tip is equal to or less than the cross-section of the first sleeve-shaped member of the catheter tip. In case the cross-section of second sleeve-shaped member of the catheter tip is less than the cross-section of the first sleeve-shaped member, the second sleeve-shaped member is at least partly accommodatable within the first sleeve-shaped member in a telescopic manner. This may allow minimizing the cross-section of catheter tip. At the same time, an expandable heart valve stent may be released from the catheter tip of the catheter system in a step-wise manner. In case the cross-section of second sleeve-shaped member of the catheter tip is less than the cross-section of the first sleeve-shaped member, the second sleeve-shaped member and the first sleeve-shaped member—once brought together—can reside on an internal support structure, e.g. a cylindrical insert, resulting in a step and gap free transition.

According to one aspect of the present disclosure, the catheter system comprises guiding means having a guiding tube with a passageway extending there between. The guiding means serves for guiding of the catheter shaft has a distal end, a proximal end and a passageway extending there between. The first and second force transmitting means are at least partly received within this passageway such as to be moveable relative to the guiding means. The guiding tube of the guiding means has a length such that the distal end of the guiding means terminates proximal to the catheter tip of the catheter system. Moreover, guiding tube has a cross-section less than the cross-section of the catheter tip.

According to another aspect of the present disclosure, the catheter system further comprises a guide wire suited for guiding the catheter tip of the catheter system to an implantation site. The guide wire is designed to be advanced into a patient's vasculature independently from the catheter system and, in particular, independently from the catheter tip of the catheter system.

In accordance with another preferred embodiment, an insertion system for inserting an expandable heart valve stent is disclosed.

Whilst the term "vascular" refers to the blood vessels of the patient's body including both veins and arteries, in a preferred embodiment, the insertion system is for transarterial delivery using the arteries, although it is conceivable that in other embodiments transvenous delivery via a vein could be used.

In particular, the vascular insertion system comprises a catheter system with a catheter tip, a catheter shaft and a handle. The catheter tip has a seat portion for accommodating a stent to be inserted in its collapsed state and a stent holder for releasably fixing the stent. The proximal end of the catheter system is attached to the handle and the distal end is attached to the catheter tip. The catheter system comprises the catheter shaft for connecting the catheter tip to the handle of the insertion system, the distal end section of the catheter shaft being flexible enough such that the catheter tip and the distal end section of the catheter shaft may be easily navigated through the anatomy and especially through the aortic arch during insertion through the aorta of the patient.

The handle has at least one first and one second operating means with which the catheter tip of the insertion system may be appropriately manipulated so that an expandable stent housed in the catheter tip may be released from the catheter tip in steps or in a defined or definable sequence of events.

The catheter tip of the catheter system and at least the distal part of the catheter shaft are typically inserted into the femoral artery and moved up the descending thoracic aorta until the catheter tip is positioned in the ascending aorta. The proximal end of the catheter shaft together with the handle attached thereto remains outside of the patient's body.

In accordance with a preferred embodiment, the catheter tip has first and second housing portions termed "sleeve-shaped members" in the following, that may be manipulated with the handle. These sleeve-shaped members are used for accommodating specific portions of the stent. The first

sleeve-shaped member is used for accommodating first functional components of the stent, for example retaining hoops of the stent (or alternatively positioning hoops of the stent), while the second sleeve-shaped member is used for accommodating the second functional components of the stent, for example, positioning hoops of the stent (or alternatively for accommodating retaining hoops of the stent).

In relation to the handle provided for the insertion system, it is preferably provided that, on one hand, the first operating means cooperate with the first sleeve-shaped member of the catheter tip so that, on actuation of the First operating means, a previously definable longitudinal displacement of the first sleeve-shaped member may be effected relative to the stent holder and the guiding tube of the catheter shaft. On the other hand, the second operating means cooperates with the second sleeve-shaped member of the catheter tip so that a previously definable longitudinal displacement of the second sleeve-shaped member may be affected relative to the stent holder and the guiding tube of the catheter shaft.

The cross-section of the second sleeve-shaped member is identical to the cross-section of the first sleeve-shaped member such that the sleeve-shaped members can completely enclose a stent accommodated in the catheter tip without a gap between the first and second sleeve-shaped members thereby providing a catheter tip having an atraumatic shape. In addition, the first and second sleeve-shaped members are movable relative to each other and relative to the stent holder.

For this purpose, first force transmitting means with a distal end section connected to the first sleeve-shaped member and a proximal end section connected to first operating means of the handle are provided. In addition, second force transmitting means with a distal end section connected to the second sleeve-shaped member and a proximal end section connected to second operating means of the handle are provided. When manipulating the first and/or second operating means of the handle, the first and/or second sleeve-shaped members may be moved relative to each other and relative to the stent holder.

In accordance with the preferred embodiment, the first force transmitting means is constituted by a first catheter tube defining a first lumen and the second force transmitting means is constituted by a second catheter tube defining a second lumen. The second catheter tube has a cross-section less than the cross-section of the first catheter tube. The first catheter tube is disposed concentrically and coaxially with the second catheter tube and the second catheter tube is received within the first lumen defined by the first catheter tube.

Contrary to the first and second sleeve-shaped members of the catheter tip, however, the stent holder of the catheter tip is not moveable relative to the handle of the insertion system. Rather, the stent holder is connected to the handle by using a stent holder tube having a distal end connected to the stent holder and a proximal end connected to a body of the handle. The stent holder tube has a cross-section less than the cross-section of the first catheter tube. In particular, the first catheter tube is disposed concentrically and coaxially with both, the second catheter tube on the one hand and the stent holder tube on the other hand. Preferably, the stent holder tube has a cross-section less than the cross-section of the first catheter tube and greater than the cross-section of the second catheter tube such that the stent holder tube is received within the first lumen defined by the first catheter tube and the second catheter tube is received within a passageway defined by the stent holder tube. The passageway defined by the stent holder tube has a diameter sufficient to accommodate the second catheter tube such that the second catheter tube is moveable relative to the stent holder tube.

The second lumen defined by the second catheter tube has a diameter sufficient to accommodate a guide wire. The second catheter tube is made from a rigid material including, for example, nitinol, stainless steel or a rigid plastic material. The material of the distal end section of the second catheter tube may have an increased flexibility compared to the material of the proximal end section in order to allow the distal end section of the catheter shaft to pass the aortic arch during insertion of the catheter tip.

The distal end section of the second catheter tube terminates in a soft catheter end tip having an atraumatic shape. The soft catheter end tip is provided with a channel aligned with the second lumen defined by the second catheter tube such that a guide wire accommodated within the second lumen of the second catheter tube may pass through the channel of the soft catheter end tip. The second sleeve-shaped member of the catheter tip is connected to the soft catheter end tip such that the opened end of the second sleeve-shaped member faces in the proximal direction opposite to the direction of the soft catheter end tip and to the second catheter tube.

The stent holder tube is made of a rigid material, for example, a rigid plastic material, stainless steel or nitinol. The distal end of the stent holder tube terminates in the stent holder which is also made of a rigid material, for example, a rigid plastic material or stainless steel. The passageway defined by the stent holder tube is aligned with a channel which passes through the stent holder. In this way, the second catheter tube is accommodated in the passageway of the stent holder tube and the channel of the stent holder such as to be moveable relative to the stent holder tube and the stent holder. The stent holder tube is provided for connecting the stent holder to the handle. For this purpose, the stent holder tube has a distal end connected to the stent holder and a proximal end connected to a body of the handle.

The first catheter tube is made of a bendable but inelastic material. For example, the first catheter tube may be at least partly made of a braided or non-braided catheter tube. Hence, the first catheter tube has a stiff braid reinforced body similar to the catheter body described in U.S. Pat. No. 4,665,604 which is incorporated herein by reference.

The first catheter tube shall be adapted to transfer compression and tension forces from the first operating means of the handle to the first sleeve-shaped member of the catheter tip without overly changing of its total length. The distal end of the first catheter tube terminates at a flared section as the transition to the section defining the first sleeve-shaped member of the catheter tip. The flared section and the first sleeve-shaped member may be formed integrally and may be connected to the distal end section of the first catheter tube. Alternatively, the first sleeve-shaped member and the flared section of the first catheter tube may be all of the same material and originating from the same raw tube prior to a widening process so that the flared section and the first sleeve-shaped member are the same elements.

The insertion system according to the preferred embodiment further comprises a guiding tube having a cross-section greater than the cross-section of the first catheter tube. The guiding tube defines a passageway and is disposed concentrically and coaxially with the first catheter tube, the stent holder tube and the second catheter tube such that the first catheter tube with the stent holder tube and the second catheter tube accommodated therein is at least partly accommodated within the passageway defined by the guiding tube,

wherein the first catheter tube is moveable relative to the guiding tube. In particular, the guiding tube terminates proximal to the catheter tip wherein the cross-section of proximal end section of the guiding tube shall be substantially the same as or less than the cross-section of the flared section provided at the proximal end of the first catheter tube. The proximal end section of the guiding tube terminates distal to the handle. The proximal end section of the guiding tube may be detached/disconnected from the handle so that the handle as well as the first and second catheter tubes and the stent holder tube together with catheter tip may be moved relative to the guiding tube.

The distal end of the guiding tube is formed such that the flared section provided at the distal end section of the first catheter tube may abut on the distal end of the guiding tube without abrupt transition. The guiding tube may be of a thin material such as to allow length deformation of the guiding tube upon transfer of compression and tension forces. The guiding tube material, however, shall have sufficient stiffness in order to mechanically avoid kinking of the flexible sections of the distal portion of the catheter shaft during insertion of the catheter tip.

The proximal end of the guiding tube is releasably connectable to the body of the handle. In this way, the guiding tube may have a double-function:

In case, the proximal end of the guiding tube is connected to the handle, the guiding tube serves as a distal extension of the body of the handle relative to which the first and second operating means are moveable for manipulating the first and second sleeve-shaped members of the catheter tip. Hence, position of the stent holder relative to the native heart valve of the patient may be changed by moving the guiding tube connected to the handle.

In case, the proximal end of the guiding tube is not connected to the body of the handle, the guiding tube may serve as a portal for passing the catheter shaft of the catheter system into the patient's body from proximal of the catheter tip.

In any case, the guiding tube has a length and is adapted such that the first catheter tube and the second catheter tube are moveable relative to each other and relative to the stent holder independent from any movement or activation of the guiding tube. In particular, the movement of the sleeve shaped members is independent from the presence or absence of the guiding tube. The length of the guiding tube is such that the sleeved shaped members and hence the first and second catheter tubes are moveable relative to each other and relative to the stent holder without interfering with the distal end of the guiding tube.

An inlet may be provided at a proximal end section of the guiding tube for injection of fluids into the guiding tube. Furthermore, a check valve may be provided at the proximal end section of the guiding tube to prevent fluid from leaking out of the guiding tube.

The guiding tube may have a length sufficient to protect the inner wall of the blood vessel through which the catheter tip passes. In addition, a separate introducer system (not belonging to the catheter system) may be provided. The introducer system then may serve as a portal for passing the complete catheter system from the catheter tip to the catheter shaft into the patient's body and up to the heart.

In addition, the guiding tube reduces the compression force exerted on the first catheter tube that is inserted through the guiding tube. This increases manoeuvrability of the first catheter tube throughout the procedure in which the first catheter tube serves as force transmitting means for manipulating the first sleeve-shaped member of the catheter tip. A consequence thereof is that the frictional force acting on the first catheter tube is reduced compared with a catheter design which is not provided with a guiding tube. Moreover, moving the catheter tip after it has been advanced through the vascular system of a patient, is greatly improved while at the same time lowering the risk of injury of the patient.

In accordance with the preferred embodiment, the guiding tube has a cross-section equal to or less than the cross-section of the catheter tip. In this regard, the guiding tube will have a length shorter than the length of the first and second catheter tubes such that the distal end of the guiding tube terminates proximal to the catheter tip. As will be appreciated, the guiding tube may not be removed from the catheter system in case the proximal end sections of the first and second catheter tube are connected to the respective operating means of a handle.

The length of the guiding tube depends on the length of the first and second catheter tubes and will typically be between about 20 cm and 100 cm. Those skilled in the art will appreciate, however, that all dimensions provided herein are intended as examples only, and that the guiding tubes and catheter tubes of different dimensions may be substituted for a particular use. As already indicated, the first and second catheter tubes are moveable relative to each other and relative to the stent holder independent from the guiding tube. The movement of the sleeve shaped members is independent from the presence or absence of the guiding tube. In other words, the guiding tube does not serve for manipulating the sleeve-shaped members of the catheter tip. In particular, the guiding tube does not block the travel of the sleeve-shaped members.

As will be appreciated, the guiding tube will be of a size, i.e. has an outer diameter, which will permit insertion in a patient's blood vessel (artery or vein) which is used for moving the stent transarterially or via a vein to an insufficient heart valve.

The guiding tube may be capable of traversing tortuous pathways in the body of the patient without kinking. The guiding tube may include an inner lubricious liner, an outer polymeric jacket, and a coil reinforcement between the inner and the outer layers. This guiding tube may provide favourable flexibility without kinking or compression. One or more radiopaque bands or markers may be incorporated within the guiding tubes material to allow precise location of the guiding tubes distal end for positioning accuracy. Those skilled in the art will appreciate that other known materials may also be suitable for a particular purpose.

In an embodiment disclosed herein, the catheter tip and the catheter shaft proximally connected to the catheter tip may be inserted into the patient's body by using a guide wire. The guide wire serves for guiding the catheter tip of the catheter system to an implantation site. Once in position above the aortic valve the guide wire may then be removed. Alternatively, the guide wire remains in the patient's body during implantation of a heart valve prosthesis accommodated in the catheter tip. Then, the guide wire is removed together with the catheter from the patient's body.

The guide wire is designed to be advanced into a patient's vasculature independently from the catheter tip and the catheter shaft proximally connected to the catheter tip. In other words, the catheter tip together with at least the distal pert of the catheter shaft and the guide wire are advanced as single units through the vasculature of the patient, respectively. Once the guide wire is placed, the catheter tip and the catheter shaft proximally connected to the catheter tip can be advanced over the guide wire directly to the particular site in the patient's cardiovascular system.

In accordance with the present invention, a guide wire is advanced through the patient's vascular system, its direction being controlled and fluoroscopically monitored by the surgeon, until its distal end is at the desired location. Preferably, the guide wire is very small in diameter, thereby not presenting any substantial obstruction to blood flow in the blood vessel. After inserting the guide wire, the catheter tip together with the catheter shaft proximally connected to the catheter tip are advanced over the guide wire with the wire being received in the second lumen which is defined by the second catheter tube of the catheter shaft. The guide wire thus simply and automatically guides the catheter tip of the catheter system directly to the intended region, without requiring difficult, time consuming manipulations.

In a preferred embodiment of the present disclosure, the guide wire has a diameter less than the diameter of the second lumen defined by the second catheter tube. This allows that the guide wire may be at least partly received within the second lumen defined by the second catheter tube for guiding the catheter tip, at least partly disposed about the guide wire, to the implantation site.

In a preferred embodiment of the invention, the second lumen defined by the second catheter tube of the catheter shaft has a minimum dimension which is just slightly greater than the diameter of the guide wire. The maximum cross-sectional dimension of the second lumen is substantially larger than the cross-section of the guide wire. Thus, when the guide wire is disposed within the second lumen there will be substantial voids through the second lumen, on opposite sides of the guide wire through which fluids may be administered to the patient and through which blood pressure measurements may be taken. Such fluids may be administered and pressure measurements may be taken without removing the guide wire at all. By way of example, the cross-section of the guide wire preferably is of the order of no more than about fifty percent of the cross-sectional area of the second lumen.

In order to implant a heart valve prosthesis accommodated in the catheter tip, the catheter tip and the catheter shaft proximally connected to the catheter tip are advanced over the guide wire. As the tip of the guide wire terminates in the left ventricle of the heart, pushing the guide wire may contact the left ventricular apex.

In order to avoid any damage of the left ventricular apex when the guide wire is inserted, and to avoid any injury or damage to the vessel wall when the guide wire is inserted (advanced) through a vessel, the guide wire preferably has a flexible bumper at the leading end of the advancing guide wire, which minimizes the risk of trauma or injury to the delicate internal surfaces of the artery. The bumper is preferably highly flexible and with a smooth leading end. For example, the guide wire may terminate in a smoothly surfaced rounded tip, at the distal end of the guide wire. Alternatively, the distal end of the guide wire may have a j-hook shape or a hockey-stick shape, thereby reducing the risk of trauma.

Since the guide wire and the catheter tip together with the catheter shaft proximally connected to the catheter tip are generally independently advanced into the vasculature, the guide wire must be sufficiently stiff throughout its length to prevent buckling. Furthermore, the guide wire shall have sufficient stiffness to track the delivery system (catheter tip and catheter shaft proximally connected to the catheter tip) around the aortic arch. On the other hand, at least the distal tip of the guide wire shall be soft enough to prevent puncture of the heart tissue.

The guide wire may comprise a distal tip guide section and a proximal pull section. The pull section allowing for the tip guide section to be pulled out after final positioning of the catheter tip and having an optimal cross sectional area and size, is generally smaller than that of the tip guide section so as to assure minimum blood leakage at the insertion site. The tip guide section is capable of guiding the catheter through a patient's vasculature.

The guide wire may, in an exemplary embodiment, be approximately 175 centimeters long so that it may be introduced through the femoral artery and have ample length to reach the patient's coronary region. The guide wire may include a small diameter main wire. This rotationally rigid main wire of the guide wire can be solid or tubular, as long as it is rigid torsionally so that it may transmit fully to the distal end a rotational motion imparted to the proximal end. The main wire has relatively little twist as its proximal end is rotated. Practically all rotation applied to the proximal end will be transmitted quickly to the very distal tip of the guide wire. Alternatively, the guide wire may be formed substantially from elongate helical springs.

As already indicated, the aortic arch in the human body may represent a challenge for transfemoral implantation of a self- or balloon-expandable heart valve stent with a heart valve prosthesis attached to it, since it has to be accessed during insertion through the aorta. When this is done, the catheter tip and the catheter shaft proximally connected to the catheter tip must undergo a change of direction of approximately 180° over a relatively small radius, usually about 50 mm, without causing injury or damage to the vessel wall. For aiding the bending of the catheter tip and the catheter shaft proximally connected to the catheter tip when passing through the aortic arch and for supporting the catheter tip in accessing the ascending aorta, the guide wire may have a specific structure such as to make a U turn in the aortic arch. Hence, the guide wire may be programmed such that the guide wire takes a U-shape bend.

In a preferred embodiment of the present disclosure, at least a distal section of the guide wire has a predefined curved configuration adapted to the curvature of the patient's aortic arch. The predefined curved configuration of at least the distal section of the guide wire is selected such as to push the catheter tip in the direction of the centre of the ascending aorta when the catheter tip is at least partly disposed about the distal section of the guide wire and transfemoral inserted into the patient's body.

In this respect, the guide wire has a double-function: On the one hand, the guide wire serves for guiding the catheter tip of the catheter system to an implantation site. On the other hand, the guide wire serves for positioning the catheter tip in the centre of the ascending aorta when the catheter tip has accessed the ascending aorta. Then, positioning arches or hoops of the stent accommodated in the catheter tip may be easily inserted into the pockets of the native heart valve of a patient so that the heart valve stent can be easily positioned.

In a preferred embodiment, at least the distal section of the guide wire exhibits a first predefinable shape before advancing the guide wire into the patient's vasculature and a second predefinable shape in the advanced state of said guide wire, wherein the second predefinable shape of the distal section of the guide wire corresponds to the predefined curved configuration of the distal section of the guide wire. For achieving this, the guide wire may consist at least partly of a shape memory material such that at least the distal section of the guide wire can transform from a temporary shape into a permanent shape under influence of an external

stimulus, wherein the temporary shape of the distal section of the guide wire corresponds to the first shape and the permanent shape of the distal section of the guide wire corresponds to the second shape.

A shape memory material, for example Nitinol, may be used as the material for at least the distal section of the guide wire. Such a shape memory material is preferably designed such that the guide wire can transform from a temporary shape into a permanent shape under the influence of an external stimulus. The temporary shape is thereby the first shape of the guide wire (i.e. the shape of the guide wire before inserting it into the patient's body), while the permanent shape is assumed in the second shape of the guide wire (i.e. in the inserted state of the guide wire). In particular, use of a shape memory material such as Nitinol, i.e. an equiatomic alloy of nickel and titanium, allows for a particularly gentle insertion procedure.

It is conceivable of course that other shape memory materials, for example shape-memory polymers, are used as the material for at least the distal section of the guide wire. At least parts of the guide wire may be formed by using, for example, a polymer composite exhibiting a crystalline or semi-crystalline polymer network having crystalline switching segments. On the other hand, an amorphous polymer network having amorphous switching segments is also conceivable.

When manufacturing the guide wire preferably made from a shape memory material, the permanent shape of the guide wire, i.e. the shape of the guide wire which is assumed in the inserted state of the guide wire, is formed. Once the desired shape has been formed, this shape is "fixed", this process being known as "programming". Programming may be effected by heating the guide wire, forming the guide wire into the desired shape and then cooling the guide wire. Programming may also be effected by forming and shaping the structure of the guide wire at lower temperature, this being known as "cold stretching." The permanent shape is thus saved, enabling the guide wire to be stored and implanted in a temporary, non-formed shape. If an external stimulus then acts on the stent structure, the shape memory effect is activated and the saved, permanent shape restored.

A particularly preferred embodiment provides for the external stimulus to be a definable switching temperature. It is thus conceivable that the material of the guide wire needs to be heated to a higher temperature than the switching temperature in order to activate the shape memory effect and thus regenerate the saved permanent shape of the guide wire. A specific switching temperature can be preset by the relevant selection of the chemical composition of the shape memory material.

It is particularly preferred to set the switching temperature to be in the range of between 10° C. and the patient's body temperature and preferably in the range of between 10° C. and room temperature (22° C.). Doing so is of advantage, especially with regard to the guide wire which needs to be inserted in a patient's body. Accordingly, all that needs to be ensured in this regard when inserting the guide wire is that the guide wire is warmed up to room temperature or the patient's body temperature (37° C.) at the site of implantation to activate the shape memory effect of the stent material.

Alternatively, the guide wire may be made from another material (for example a platinum-tungsten alloy) which allows that the distal region of the guide wire can be bent manually by the surgeon and will retain its bent configuration when relaxed. This enables the guide wire to be controllably steered by rotation of the guide wire to direct the curved distal end selectively into the aortic arch and into the ascending aorta. Rotational control of the guide wire may be enhanced by bending the proximal end of the wire to form somewhat of a handle.

In use, the surgeon may bend the distal region of the guide wire so that it will be biased toward and will assume somewhat of a curve when relaxed. When advanced through the patients artery the degree of resilience at the distal region of the wire is such that the wire will straighten and follow the path of the artery quite easily. A progressively increased flexibility resulting from, for example, a continuous taper at the distal region of the guide wire may enhance the ability of the guide wire to flex from the pre-bent biased curve and follow the path of the blood vessel.

When the distal end of the pre-bent, biased guide wire is at the descending aorta proximal of the aortic arch, the surgeon can steer it into the aortic arch and thereafter into the ascending arch by rotation of the guide wire by manipulating it from the proximal end.

Alternatively, the guide wire may be inserted into the patient's body by using a guide catheter. The guide catheter may comprise a guide catheter tube defining a lumen for receiving the guide wire. The guide catheter may serve for inserting the guide wire. Once the guide catheter is introduced through the femoral artery and the aortic arch and has reached the patient's aortic valve region, the guide wire is released from the guide catheter by removing the guide catheter whereas the guide wire remains in the patient's body. In this case, the guide wire exhibits its first predefinable shape before releasing the guide wire from the guide catheter and its second predefinable shape after releasing the guide wire from the guide catheter. As already indicated, the second predefinable shape of the distal section of the guide wire is selected such that the distal section of the guide wire pushes the catheter tip in the direction of the centre of the ascending aorta when the catheter tip is at least partly disposed about the distal section of the guide wire and transfemoral inserted into the patient's body.

According to one aspect of the present disclosure, at least the distal region of the guide wire is at least partly formed from a material having a high radiopacity. A relatively high degree of radiopacity of the distal region of the guide wire enhances fluoroscopic imaging of the guide wire as it is advanced through the patient's artery.

The procedure for using the guide wire in accordance with the present invention involves initial placement and location of the guide wire in the femoral artery and the aortic arch. Once the guide wire is in place the catheter tip with the catheter shaft of the catheter system then may be advanced over the guide wire to a point where the stent accommodated in the catheter tip is in the ascending aorta proximal to the native aortic heart valve. This can be verified fluoroscopically because of the highly radiopaque characteristic of the catheter tip and/or guide wire and also by injecting radiopaque dye through, for example, a lumen of the catheter system. For this reason, the catheter tip of the catheter system may be provided with radiopaque markers which also facilitate fluoroscopic monitoring of its progress and position.

In order to treat a heart valve stenosis and/or heart valve insufficiency in a patient, a medical device is disclosed. The medical device comprises an insertion system and an expandable heart valve stent accommodated in the catheter tip of the insertion system. While it is accommodated in the catheter tip of the insertion system, the stent adopts a first previously definable configuration. Outside the catheter tip or in the implanted state, however, the stent exists in a second previously definable configuration. The first configu-

ration of the stent corresponds to the folded-up state, while the stent exists in its expanded state in the second configuration.

A heart valve stent is used with the medical device, as described for example in the European Patent Application No. 07 110 318 or in the European Patent Application No. 08 151 963. In a preferred embodiment of the medical device, a heart valve stent is accordingly used which exhibits the following:

- a first retaining region, to which a heart valve prosthesis can be attached;
- an opposing, second retaining region with at least one retaining element, for example in the form of retaining eyes or in the form of retaining heads, whereby at least one retaining element of the stent can be put in releasable engagement with the stent holder of the catheter tip forming part of the insertion system;
- at least one retaining hoop, to which a heart valve prosthesis can be fastened; and
- at least one and preferably three positioning hoops, which are designed to engage in pockets of the native heart valve in the implanted state of the stent, thus to enable automatic positioning of the stent in the aorta of the patient.

In particular, an insertion system is proposed, with which an expandable heart valve stent with a heart valve prosthesis attached to this stent can be advanced to the implantation site in a particularly simple way, for example via the aorta of a patient being treated (transarterially or transfemorally). Preferably, during transarterial or transfemoral access by the catheter system, the whole free cross-section available within the aorta is not completely filled up, since the catheter tip provided at the distal end region of the catheter system, in which the stent can be accommodated with the heart valve prosthesis, can be made sufficiently small with respect to its external diameter.

The expandable heart valve stent with the heart valve prosthesis attached to it can be accommodated temporarily during implantation in the folded-up state in the catheter tip of the insertion system, which is provided at the distal end region of the catheter system. The catheter system may be of a length sufficient to allow the catheter tip provided at the distal end region of the catheter system to be guided through the aorta to the patient's heart by insertion at the patient's groin.

The insertion system designed for transarterial or transfemoral access is therefore suitable for inserting a heart valve stent with a heart valve prosthesis attached to it, transarterially or transfemorally into the body of the patient; for example, the catheter system of the insertion system is inserted with the catheter tip located at the distal end of the catheter system via puncture of the *A. femoris communis* (inguinal artery).

In particular, with the insertion system designed for transarterial or transfemoral access, the catheter system may be designed so that it is both kink-resistant and flexible such that a bending radius of up to 4 cm, and preferably up to 3 cm, can be realised, at least at the distal end region of the catheter system.

Preferred embodiments will be described with reference to the appended drawings below.

Of these:

FIG. **1**: an embodiment of an insertion system for transfemoral/transarterial insertion of an expandable heart valve stent in a part-sectioned side elevation;

FIG. **2**: an embodiment of a handle for an insertion system for transfemoral/transarterial insertion of an expandable heart valve stent in a part-sectioned side elevation;

FIG. **3***a*: an embodiment of an insertion system for transfemoral/transarterial insertion of a heart valve stent in a side elevation;

FIG. **3***b*: a side elevation of the transfemoral transarterial insertion system in accordance with FIG. **3***a* with a deflected catheter system;

FIG. **4**: a further embodiment of an insertion system for transfemoral/transarterial insertion of a heart valve stent in a side elevation;

FIG. **5**: a further embodiment of an insertion system for transfemoral/transarterial insertion of a heart valve stent in a side elevation;

FIG. **6***a-d*: side elevations of the transfemoral transarterial insertion system in accordance with FIG. **3***a* in its four previously defined functional states to illustrate the loading procedure of the insertion system

FIGS. **7***a-d*: side elevations of the transfemoral transarterial insertion system in accordance with FIG. **3***a* in its four previously defined functional states to illustrate the release procedure of a stent housed in the catheter tip of the insertion system;

FIG. **8**: an embodiment of a catheter tip for an insertion system for transfemoral/transarterial insertion of an expandable heart valve stent in a part-sectioned side elevation;

FIG. **9**: a further embodiment of a catheter tip for an insertion system for transfemoral/transarterial insertion of an expandable heart valve stent in a part-sectioned side elevation;

FIG. **10***a*: an exemplary embodiment of a catheter shaft for an insertion system for transfemoral/transarterial insertion of an expandable heart valve stent in a cross-sectional elevation;

FIG. **10***b*: a further exemplary embodiment of a catheter shaft for an insertion system for transfemoral/transarterial insertion of an expandable heart valve stent in a cross-sectional elevation;

FIG. **11**: a schematic view to illustrate a transfemoral/transarterial implantation procedure of a heart valve stent;

FIG. **12***a-c*: three-dimensional schematic part-sectioned view of the catheter tip of a transfemoral/trans-apical insertion system in different functional states to illustrate the implantation procedure of a heart valve stent mounted in the catheter tip;

FIG. **13***a-d*: side elevations of a further embodiment of a catheter tip for an insertion system for transfemoral/transarterial insertion of an expandable heart valve stent in its four previously defined functional states to illustrate the release procedure of a stent housed in the catheter tip of the insertion system; and

FIG. **13***e*: a side elevation of the embodiment of a catheter tip in accordance with FIG. **13***a-d* in its state after releasing a stent housed in the catheter tip and ready to be removed again from the body of the patient.

FIG. **11** shows schematically an example of how a transarterial or transfemoral access can be gained to the heart of a patient. In the illustration in accordance with FIG. **11**, a heart valve stent **150** is advanced with the aid of a insertion system **100** via the femoral artery to the aortic valve. Embodiments of an insertion system **100**, which is suitable for transarterial or transfemoral access, are described in the following.

In accordance with a preferred embodiment, an insertion system **100** has a catheter system **1** and a handle **70** connected to the proximal end section of the catheter system

1. As depicted, for example, in FIG. **1**, the catheter system **1** of the preferred embodiment comprises a catheter tip **10** having a seat portion for accommodating a stent to be inserted in its collapsed state and a stent holder **15** for releasably fixing the stent. The catheter system **1** further comprises a catheter shaft **30** for connecting the catheter tip **10** to the handle **70** of the insertion system **100**, the distal end section of the catheter shaft **30** being flexible enough such that the catheter tip **10** and the distal end section of the catheter shaft **30** may pass the aortic arch during insertion through the aorta of the patient.

The seat portion of the catheter tip **10** comprises a first sleeve-shaped member **11** and a second sleeve-shaped member **21**, the cross-section of the second sleeve-shaped member **21** are preferably identical to each other such that the first and second sleeve-shaped member **11**, **21** can completely enclosed a stent accommodated in the catheter tip **10**. In addition, the first and second sleeve-shaped members **11**, **21** are movable relative to each other and relative to the stent holder **15**.

For this purpose, first force transmitting means **31** with a distal end section connected to the first sleeve-shaped member **11** and a proximal end section connected to first operating means **71** of the handle **70** are provided. In addition, second force transmitting means **41** with a distal end section connected to the second sleeve-shaped member **21** and a proximal end section connected to second operating means **81** of the handle **70** are provided. When manipulating the first and/or second operating means **71**, **81** of the handle **70**, the first and/or second sleeve-shaped members **11**, **21** may be moved relative to each other and relative to the stent holder **15**.

As can be seen from FIG. **10***a* and FIG. **10***b*, the first force transmitting means **31** may be constituted by a first catheter tube **32** defining a first lumen and the second force transmitting means **41** is constituted by a second catheter tube **42** defining a second lumen. The second catheter tube **42** may have a cross-section less than the cross-section of the first catheter tube **32**. The first catheter tube **32** may be disposed concentrically and coaxially with the second catheter tube **42** and the second catheter tube **42** is received within the first lumen defined by the first catheter tube **32**.

Contrary to the first and second sleeve-shaped members **11**, **21** of the catheter tip **10**, however, the stent holder **15** of the catheter tip **10** is not moveable relative to the handle **70** of the insertion system **100**. Rather, the stent holder **15** is connected to the housing **70'** of the handle **70** by using a stent holder tube **62** having a distal end connected to the stent holder **15** and a proximal end connected to a body **70'** of the handle **70**.

Referring to FIG. **10***b*, the stent holder tube **62** may have a cross-section less than the cross-section of the first catheter tube **32**. In particular, the first catheter tube **32** may be disposed concentrically and coaxially with both, the second catheter tube **42** on the one hand and the stent holder tube **62** on the other hand. Preferably, the stent holder tube **62** has a cross-section less than the cross-section of the first catheter tube **32** and greater than the cross-section of the second catheter tube **42** such that the stent holder tube **62** is received within the first lumen defined by the first catheter tube **32** and the second catheter tube **42** is received within a passageway defined by the stent holder tube **62**. The passageway defined by the stent holder tube **62** has a diameter sufficient to accommodate the second catheter tube **42** such that the second catheter tube **42** is moveable relative to the stent holder tube **62**.

The second lumen defined by the second catheter tube **42** has a diameter sufficient to accommodate a guide wire **180**. The second catheter tube **42** may be made from a rigid material including, for example, nitinol, stainless steel or a rigid plastic material (see FIG. **10***b*). The material of the distal end section of the second catheter tube **42** may have an increased flexibility compared to the material of the proximal end section in order to allow the distal end section of the catheter shaft **30** to pass the aortic arch during insertion of the catheter tip **10**. For example, the guiding tube **52** may be a 17F-catheter tube and the first catheter tube **32** may be a 12F-catheter tube.

As can been seen, for example, from FIG. **9**, the distal end section of the second catheter tube **42** terminates in a soft catheter end tip **25** having an atraumatic shape. The soft catheter end tip **25** is provided with a channel aligned with the second lumen defined by the second catheter tube **42** such that a guide wire **180** accommodated within the second lumen of the second catheter tube **42** may pass through the channel of the soft catheter end tip **25**. The second sleeve-shaped member **21** of the catheter tip **10** is connected to the soft catheter end tip **25** such that the opened end of the second sleeve-shaped member **21** faces in the proximal direction opposite to the direction of the soft catheter end tip **25** and to the second catheter tube **42**.

According to the exemplary embodiment depicted in FIG. **10***b*, the stent holder tube **62** is made of a rigid material, for example, a rigid plastic material, stainless steel or nitinol. The distal end of the stent holder tube **62** terminates in the stent holder **15** which is also made of a rigid material, for example, a rigid plastic material or stainless steel. The passageway defined by the stent holder tube **62** is aligned with a channel which passes through the stent holder **15**. In this way, the second catheter tube **42** is accommodated in the passageway of the stent holder tube **62** and the channel of the stent holder **15** such as to be moveable relative to the stent holder tube **62** and the stent holder **15**.

The first catheter tube **32** is made of a bendable but inelastic material. For example, the first catheter tube **32** may be at least partly made of a braided or non-braided catheter tube. The first catheter tube **32** shall be adapted to transfer compression and tension forces from the first operating means **71** of the handle **70** to the first sleeve-shaped member **11** of the catheter tip **10** without overly changing its total length. The distal end of the first catheter tube **32** terminates at a flared section as a transition to the section defining the first sleeve-shaped member **11** of the catheter tip **10**.

As can be seen from FIG. **9**, the flared section and the first sleeve-shaped member **11** may be formed integrally and may be connected to the distal end section of the first catheter tube **31**. In addition, the flared section may constitute the first sleeve-shaped member **11** of the catheter tip **10**. The first sleeve-shaped member **11** and the flared section of the first catheter tube **31** may be all of the same material and originating from the same raw tube prior to a widening process so that the flared section and the first sleeve-shaped member **11** are the same elements.

Referring for example to FIG. **1**, the insertion system **100** according to the preferred embodiment further comprises a guiding tube **52** having a cross-section greater than the cross-section of the first catheter tube **32**. The guiding tube **52** defines a passageway and is disposed concentrically and coaxially with the first catheter tube **32**, the stent holder tube **62** and the second catheter tube **42** such that the first catheter tube **32** with the stent holder tube **62** and the second catheter tube **42** accommodated therein is at least partly accommo-

dated within the passageway defined by the guiding tube **52**, wherein the first catheter tube **32** is moveable relative to the guiding tube **52**. In particular, the guiding tube **52** terminates proximal to the catheter tip **10** wherein the cross-section of proximal end section of the guiding tube **52** shall be the same as or less than the cross-section of the flared section provided at the proximal end of the first catheter tube **32** so that a smooth transition from the first sleeve-shaped member **11** of the catheter tip **10** to the guiding tube **52** may be achieved (see FIG. **9**).

The proximal end section of the guiding tube **52** terminates distal to the handle **70**. The proximal end section of the guiding tube **52** may be detached disconnected from the handle **70** so that the handle **70** as well as the first and second catheter tubes **32**, **42** and the stent holder tube **62** together with catheter tip **10** may be moved relative to the guiding tube **52**.

The distal end of the guiding tube **52** is formed such that the flared section provided at the distal end section of the first catheter tube **32** may abut on the distal end of the guiding tube **52** without abrupt transition. The guiding tube **52** may be of a thin material such as to allow length deformation of the guiding tube **52** upon transfer of compression and tension forces. The material of the guiding tube **52**, however, shall have sufficient stiffness in order to mechanically avoid kinking of the flexible sections of the distal portion of the catheter shaft **30** during insertion of the catheter tip **10**.

The proximal end of the guiding tube **52** is releasably connectable to the body **70'** of the handle **70**. In this way, the guiding tube **52** may have a double-function:

In case, the proximal end of the guiding tube **52** is connected to the handle **70**, the guiding tube **52** serves as a distal extension of the body **70'** of the handle **70** relative to which the first and second operating means **71**, **81** are moveable for manipulating the first and second sleeve-shaped members **11**, **21** of the catheter tip **10**. Hence, the position of the stent holder **15** relative to the native heart valve of the patient may be changed by moving the guiding tube **52** connected to the handle **70**.

In case, the proximal end of the guiding tube **52** is not connected to the body **70'** of the handle **70**, the guiding tube **52** may serve as an introducer tube, i.e. as a portal for passing the catheter tip **10** of the catheter system **1** into the patient's body and up to the heart.

As depicted, for example, in FIG. **1**, an inlet port **53** may be provided at a proximal end section of the guiding tube **52** for injection of fluids into the guiding tube **52**. Furthermore, a check valve may be provided at the proximal end section of the guiding tube **52** to prevent fluid from leaking out of the guiding tube **52**.

A description is given in the following, with reference to FIGS. **1** to **10***b*, of the components of exemplary embodiments of insertion systems **100**, which are suitable for a transarterial or transfemoral access to the implantation location. During a transarterial or transfemoral access, the catheter tip **10** of the insertion system **100** is advanced, for example, via the aorta to the implantation site.

FIG. **1** shows a part-sectioned representation of an exemplary embodiment of an insertion system **100** designed for transfemoral or transarterial access.

As illustrated in FIG. **1**, an insertion system **100** according to the present disclosure may comprise a catheter system **1** and a handle **70** connected to the proximal end section of the catheter system **1**. The catheter system **1** comprises a catheter tip **10** and a catheter shaft **30** for connecting the catheter tip **10** to the handle **70**. The catheter tip **10** has a seat portion for accommodating a stent (see FIGS. **12***a-c*) in its collapsed state as well as a stent holder **15** for releasably fixing the stent.

The seat portion of the catheter tip **10** is constituted by a first sleeve-shaped member **11** and a second sleeve-shaped member **21**. As will be explained in more detail with reference to FIGS. **6***a-d* and FIGS. **7***a-d*, the sleeve-shaped members **11**, **21** of the catheter tip **10** are movable relative to each other and relative to the stent holder **15**.

The catheter shaft **30** comprises first force transmitting means **31**, second force transmitting means **41** and guiding means **51**. In accordance with the exemplary embodiment depicted in FIG. **1**, the first and second force transmitting means **41** **31**, **41** of the catheter system **1** are realized as flexible, elongated catheter tubes **32**, **42**. Each of the first and second catheter tubes **32**, **42** defines a separate lumen. In addition, the guiding means **51** is realized as guiding tube **52** defining a passageway within which the first and second catheter tubes **32**, **42** are received such as to be movable relative to the guiding tube **52**.

As can be seen in FIG. **1**, the guiding tube **52** has a distal end which terminates proximal to the catheter tip **10**. On the other hand, the first catheter tube **32** has a length which is the same as, or substantially similar to the length of the second catheter tube **42**. The first catheter tube **32** terminates at its distal end in a flared section as a transition to the section with wider cross-section defining the first sleeve-shaped member **11** of the catheter tip **10**. In particular, and as can be seen from the illustration in FIG. **9**, the wider section of the first catheter tube **32** is formed integrally with the distal end section of the first catheter tube **32**. The wider section has a length greater than the length of a collapsed stent to be accommodated in the catheter tip **10**.

As already mentioned, in the exemplary embodiment depicted in FIG. **1**, the first force transmitting means **31** of the catheter system **1** is constituted by a first catheter tube **32** defining a first lumen, wherein the second force transmitting means **41** is constituted by a second catheter tube **42** defining a second lumen. The second catheter tube **42** has a cross-section less than the cross-section of the first catheter tube **32**, wherein the first catheter tube **32** is disposed concentrically and coaxially with the second catheter tube **42**. The cross-section of the catheter tip **10**, however, is greater than or equal to the cross-section of the guiding tube **52**.

On the other hand, the guiding tube **52** has a cross-section which is greater than the cross-section of the part of the first catheter tube **32** which is received within the guiding tube **52**. The cross-section of the catheter tip **10**, however, is greater than the cross-section of the guiding tube **52**. Hence, the guiding tube **52** cannot be removed from the insertion system **100** without disconnecting the catheter system **1** from the handle **70**.

At the proximal end section of the guiding tube **52**, a check valve may be provided for preventing fluid from leaking out of the guiding tube **52**. Furthermore, an inlet port **53** may be provided at the proximal end section of the guiding tube **52** for injection of fluids into the guiding tube **52**. Hence, fluids such as saline solution may be injected through the inlet port **52** to flush the interior passageway of the guiding tube **52** and to reduce the incidence of blood dotting. A stopcock may be attached to the inlet port **53** to maintain the port **53** in a closed position when the port **53** is not being accessed to flush the passageway of the guiding tube **52**.

The guiding tube **52** is movable relative to the handle **70** and the first and second catheter tubes **32**, **42**. This provides a grip for the user who can hold the catheter shaft **30** at its

proximal end section during positioning of the catheter tip **10** and during manipulation of the sleeve-shaped element **11** of the catheter tip **10**. The user can hold the guiding tube **52**, and in particular the proximal end section of the guiding tube **52** for supporting the movement of the first sleeve-shaped element **11** of the catheter tip **10** relative to the handle **70** such that the outer sheath of the catheter system **1** need not be held by the user or kinked.

In the exemplary embodiment of the insertion system **100** depicted in FIG. **1**, a handle **70** is utilized, said handle **70** comprising first and a second operating means **71**, **81**, which are connected by means of corresponding first and second force transmission means **31**, **41** of the catheter shaft **30** to the first and second sleeve-shaped member **21***s* **11**, **21** of the catheter tip **10**. The first operating means **71** has a first pusher **73** which is functionally connected to the first slide **74**. The first slide **74** is guided in a first guide **72** in the longitudinal direction L of the handle **70**. The distal-side end of the first guide **72** defines the first stop **75** and the proximal-side end of the first guide **72** the second stop **76**, which define the overall longitudinal displacement that can be effected with the first operating means **71**. A locking element **77'** may be positioned between the distal-side and the proximal-side end of the first guide **72**, which defines the additional stop **77**.

The second operating means **81** of the handle **70** shown in FIG. **1** has a second pusher **83**, which is functionally connected to a second slide **84**. The second slide **84** is guided in a longitudinal guide (second guide **82**) between a first stop **85** and a second stop **86**. The second slide **84** is connected by means of the second force transmission means **41** with the second sleeve-shaped member **21** of the catheter tip **10**. On actuation of the second operating means **81**, the second slide **84** is moved in the longitudinal direction L of the handle **70** from the first stop **85** to the second stop **86**. This movement effects a longitudinal displacement of the second sleeve-shaped member **21** of the catheter tip **10** connected via the second force transmission means **41** with the second operating means **81**.

To prevent an unintended displacement of the second slide **84**, the second operating means **81** is equipped with a securing element **89**, which may connect the second slide **84** with the body **70'** of the handle **70** when in use. A longitudinal displacement of the second slide **84** to the second stop **86** is possible following removal or deactivation of the securing element **89**.

FIG. **2** shows a further embodiment of a handle **70** of an insertion system **100** designed for transfemoral or transarterial access in a part-sectioned side view. The construction and mode of operation of the first and second operating means **81** **71**, **81** of the embodiment of the handle **70** shown in FIG. **2** is comparable in structural and functional respects to the handle **70** as previously described with reference to FIG. **1**. Hence, elements in FIG. **2** that are generally similar to previously described elements have the same reference numbers compared with the reference numbers in FIG. **1** previously used for the similar elements.

In distinction to the handle **70** described with reference to FIG. **1**, however, the handle **70** in accordance with FIG. **2** is provided with a third operating means **96** in the form of a wheel, by means of which a flexural link region **34** of the catheter shaft **30** can be controlled. It is important to note, however, that the catheter shaft **30** is only optionally provided with such flexural link region **34**. Rather, the material of the distal end section of the catheter shaft **30** may have an increased flexibility compared to the material of the proximal end section in order to allow the distal end section of the catheter shaft to pass **30** the aortic arch during insertion of the catheter tip.

In the exemplary embodiment depicted in FIG. **2**, the third operating element **96** preferably has a detent device **100**, to allow a set deflection of the flexural link region **34** of the catheter shaft **30** to be fixed. For example, it is possible to provide a suitable catch mechanism on the hand wheel of the third operating means **96**, which cooperates with the body **70'** of the handle **70**. In particular, it is possible for the flexural link region **34** of the catheter shaft **30** to be connected to the third operating means **96** by way of a control wire **35** whereby, on an actuation of the third operating means **96** via the control wire **35** a tensile forces is exerted on the flexural link region **34**, which produces the deflection of the flexural link region **34** (see FIG. **3***b*).

However it is also possible, of course, to choose another embodiment as the third operating means **96** for deflecting a flexural link region **34** of the catheter shaft **30**, in case the catheter shaft **30** is provided with such a flexural link region **34**.

The handle **70** of the insertion system **100** designed for transarterial or transfemoral access may be provided with a pretensioning device, shown in FIG. **2**. With such a pretensioning device, a constant tensile force may be exerted via the second operating means **81** on the second sleeve-shaped member **21** of the catheter tip **10**, As shown in FIG. **2**, the pretensioning device may have a compression spring **97**, permanently stressed along its spring axis, which is prestressed between a first stop **97***a* connected to the body **70'** of the handle **70** and a second stop **97***b* connected to the proximal end region of the second operating means **81**. In this respect, a permanent, previously defined or definable tensile force is exerted on the second sleeve-shaped member **21** of the catheter tip **10**.

The pretensioning device implemented with the spring **97** in the embodiment in accordance with FIG. **2** may be advantageous when the catheter shaft **30** is bent during the implantation procedure, for example, when the catheter tip **10** of the insertion system **100** is inserted through the aorta. When the catheter shaft **30** is bent, the outer fibres of the catheter shaft **30** are shortened. This can be compensated appropriately with the aid of the pretensioning device. In detail, on bending of the flexural link region **34** relative to the neutral fibres of the catheter shaft **30** running along the longitudinal axis L, the outer fibres of the catheter shaft **30** radially spaced from the neutral fibres are shortened. Since the second force transmission means **41**, which connects the second operating means **81** with the second sleeve-shaped member **21** in the insertion system **100**, normally runs along the neutral fibre of the catheter shaft **30**, a bending contraction inevitably occurs when the catheter shaft **30** is bent, having the result that, despite fixing of the first operating means **71**, the first sleeve-shaped member **11** of the catheter tip **10** is displaced relative to the stent holder **15** in a proximal direction.

This longitudinal displacement of the first sleeve-shaped member **11** of the catheter tip **10** that takes place during the bending procedure is compensated with the aid of the prestressing device (spring **97**), since the spring **97** of the prestressing device exerts a constant tensile force on the second force transmission means **41** and therefore on the second sleeve-shaped member **21** of the catheter tip **10** and consequently constantly presses the distal-side end tip **25** of the catheter tip **10** against the distal-side end of the first sleeve-shaped member **11**. This enables the catheter tip **10** to remain completely closed even during a deflection of the

catheter shaft **30** effected, for example, when the catheter tip **10** is inserted through the aorta.

On actuation of the second operating means **81** of the handle **70**, it is necessary to press the second slide **84** against the prestress supplied by the spring **97** of the prestressing device on the second stop **86**.

It is important to note, however, that a prestressing device of the kind as described above is not mandatory for the insertion system as disclosed herein.

A further exemplary embodiment of an insertion system **100** designed for transarterial transfemoral access is shown in FIGS. **3***a, b*. Elements in FIGS. **3***a, b* that are generally similar to previously described elements have the same reference numbers compared with the reference numbers in FIGS. **1** and **2** previously used for the similar elements.

The insertion system **100** shown in FIGS. **3***a, b* comprises a catheter system **1** of the kind as previously described with reference to FIG. **1**, i.e. a catheter system **1** having a catheter tip **10** and a catheter shaft **30** which is provided with a first catheter tube **32** acting as first force transmitting means **31**, a second catheter tube **42** acting as second force transmitting means **41**, and a guiding tube **52** acting as guiding means **51**. Contrary to the catheter shaft **30** utilized in the exemplary embodiment of the insertion system **100** depicted in FIG. **1**, however, the catheter shaft **30** of the insertion system **100** shown in FIGS. **3***a, b* is provided with a flexural link region **34** of the kind as previously described with reference to FIG. **2**.

As will be described in the following, the insertion system **100** shown in FIGS. **3***a, b* is provided with a different embodiment of a handle **70** which is used in order to manipulate the first and second sleeve-shaped members **11**, **21** of the catheter tip **10**.

In relation to the handle **70** used with the insertion system **100** shown in FIG. **3***a*, it can be seen that the end region of the handle **70** is in the form of a turning mechanism **98** (rotatable means), with which the second force transmission means **41** of the catheter shaft **30** can be twisted with the distal-side end tip **25** and the second sleeve-shaped member **21** of the catheter tip **10** fastened to it about the longitudinal axis L of the catheter tip **10**. The second sleeve-shaped member **21** of the catheter tip **10** is connected by means of a loose bearing to the stent holder **15**, allowing transmission of a turning moment between the second sleeve-shaped member **21** and the stent holder **15**, without allowing transmission of any tensile or compression forces acting in the direction of the longitudinal axis L of the catheter tip **10**. Thus, when a turning movement of the second sleeve-shaped member **21** is induced with the turning mechanism **98**, the stent holder **15** also turns correspondingly about the longitudinal axis L.

The turning mechanism **98** preferably allows the stent holder **15** to twist through approximately 120°. Thus the rotation of a stent housed in the catheter tip **10**, and particularly the positioning hoops already released in the second functional state of the insertion system **100**, can be controlled, facilitating precise positioning of the already expanded positioning hoops of the stent in the pockets of the insufficient, native heart valve.

Preferably, the rotation movement of the stent holder **15** about the longitudinal axis L of the catheter tip **10** that can be effected with the turning mechanism **98** exhibits a previously definable, preferably small delay in reaction to a turning moment initiated by means of the turning mechanism **98**.

Further, the embodiment of the handle **70** shown in FIG. **3***a* is equipped with a third operating means **96** in the form of a wheel, with which a flexure/link **34**, preferably provided at the distal end region of the catheter shaft **30**, can be deflected.

The deflection of the distal end region of the catheter shaft **30** that can be effected with this flexural link region **34** is shown schematically in FIG. **3***b*. In detail, a device is provided for force transmission (control wire **35**—see FIG. **8**) which is connected on one side to the flexural link regions **34** preferably provided at the distal end region of the catheter shaft **30** and, on the other side, to the third operating means **96** of the handle **70** implemented in the embodiment shown in FIG. **3** as a hand wheel.

It is possible to implement the device for force transmission as a control wire **35**, which is passed through the inside of the first transmission means **31** and preferably at the distal end of the flexural link region **34** or at the proximal end of the catheter tip **10** (see FIG. **8**) to have a directed effect on the curvature of the flexural link region **34**. With the tensile forces that can be exerted on the flexural link region **34** with the aid of the control wire **35**, it is possible to obtain a defined curvature of the distal end region of the catheter shaft **30**. This is a particular advantage during transarterial/transfemoral access when navigating the aortic arch.

Further exemplary embodiments of an insertion system **100** which is suitable for transarterial/transfemoral access to the implantation location are shown in FIGS. **4** and **5**. Elements in FIGS. **4** and **5** that are generally similar to previously described elements have the same reference numbers compared with the reference numbers in FIGS. **1**, **2** and **3***a, b* previously used for the similar elements.

Compared with the exemplary embodiment depicted in FIGS. **1** and **2** as well as FIGS. **3***a, b*, the embodiments shown in FIGS. **4** and **5** differ first and foremost in relation to the implementation of the corresponding operating means **71**, **81** of the handle **70**.

The insertion system **100** in accordance with FIG. **4** has a handle **70** with which the first operating means **71**, which is used for manipulation of the first sleeve-shaped member **11** of the catheter tip **10**, is similar to a trigger of a revolver. The user such as a physician who carries out the treatment may hold the handle **70** at the grip **88**, while the first operating means **71** in the form of a trigger of a revolver is operated with the index finger of the hand holding it.

In the insertion system **100** shown in FIG. **5**, a handle **70** is used which corresponds in structural and functional respects to the handle **70** used with the insertion system **100** in FIG. **3** with the exception of the grip **88** provided in the embodiment in accordance with FIG. **3**.

A description is given in the following, with reference to FIGS. **6***a-d* and FIGS. **7***a-d*, of the functional coaction of the components of an insertion system **100**, which is suitable for a transarterial or transfemoral access to the implantation location. Elements in FIGS. **6***a* to **6***d* and FIGS. **7***a* to **7***d* that are generally similar to previously described elements have the same reference numbers compared with the reference numbers in FIGS. **1** to **5** previously used for the similar elements.

Reference is made to FIGS. **6***a* to **6***d* for illustrating the procedure for loading a stent into the catheter tip **10** of the insertion system **100** in FIGS. **7***a* to **7***d*, the stepwise release of a stent mounted in the catheter tip **10** of the insertion system **100** is illustrated.

It is important to note, however, that the procedure for loading a stent into the catheter tip **10** as depicted in FIGS. **6***a* to **6***d*, as well as the procedure for stepwise releasing of a stent mounted in the catheter tip **10** as depicted in FIGS.

7*a* to 7*d* also apply to the other exemplary embodiments of the transarterial transfemoral insertion system **100** disclosed herein.

The handle **70** for the transarterial J transfemoral insertion system **100** according to the illustration in FIGS. **6** and **7** has a wheel rotatably mounted in the handle **70** which is functionally connected to the first sleeve-shaped member **11** of the catheter tip **10** associated with the first operating means **71** via a corresponding first force transmission means **31**, so that force can be directly transmitted from the first operating means **71** in the form of the wheel to the first sleeve-shaped member **11** of the catheter tip **10**.

In detail, it is provided that, with the first operating means **71** of the handle **70** in accordance with FIG. **6** and FIG. **7**, the first operating means **71** in the form of the wheel can turn between a first stop and a second stop, in order to execute a definable longitudinal displacement stroke on the first sleeve-shaped member **11** of the catheter tip **10**. The first operating means **71** of the handle **70** is provided with a additional stop between the first and second stop which cooperates, on one side with the first stop and on the other up with the second stop so that, on actuation of the first operating means **71**, a longitudinal displacement of the first sleeve-shaped member **11** of the catheter tip **10** can be effected relative to the stent holder **15** of the catheter tip **10**, consisting of two defined separate steps.

With the first operating means **71** used in the form of a wheel, the additional stop associated with the first operating means **71** is in the form of a locking element **77'** positioned removably in the flow of force between the wheel and the first sleeve-shaped member **11** of the catheter tip **10**, interrupting direct force transmission from the wheel to the first sleeve-shaped member **11** of the catheter tip **10**. Alternatively, however, it is possible for the additional stop associated with the first operating means **71** to be in the form of a locking element restricting the free rotation of the wheel between the first and the second stop.

However, it is of course also possible in principle for the first operating means **71** of the handle **70** used with the insertion system **100** designed for transarterial transfemoral access not to be a wheel, but to be implemented as a pusher mechanism.

In relation to the handle **70** that is used with the embodiment of the insertion system **100**, for example in accordance with the illustrations in FIGS. **6** and **7**, it is provided that the second operating means **81** has a second slide **84** guided in a second guide **82** and functionally connected to a second pusher **83**. This second slide **84**, which is guided in the interior of the handle **70** and therefore cannot be seen in the view of FIGS. **6** and **7**, is functionally connected to the second sleeve-shaped member **21** of the catheter tip **10** associated with the second operating means **81** by means of a second force transmission means **41** so that, on actuation of the second operating means **81**, force is directly transmitted from the second slide **84** to the second sleeve-shaped member **21** of the catheter tip **10**.

The second operating means **81** can be displaced between a first position (Pos. 1) and a second position (Pos. 2) in the longitudinal direction of the handle **70**, whereby the longitudinal displacement stroke that can be thus effected via the second force transmission means **41** is transferred directly to the second sleeve-shaped member **21** of the catheter tip **10**. The first and second positions are each defined with the aid of a first and a second stop **85**, **86**.

A securing element **89** is provided, associated with the second operating means **81**, which is removably located on the second guide **82** and which blocks longitudinal displacement of the (second) slide **84** associated with the second operating means **81** when used.

The handle **70** which is used with the transarterial transfemoral insertion system **100** of the embodiment shown in FIGS. **6** and **7** further exhibits an optional grip **88**, which facilitates the operability of the handle **70** and in particular the operating conformity of the handle **70**. The grip **88** is preferably releasably connected to the body **70'** of the handle **70** and can optionally be fixed at different positions on the body **70'** of the handle **70**.

In relation to the construction of the catheter tip **10** which is used, for example, with the insertion system **100** shown in FIGS. **6** and **7** and which allows transarterial/transfemoral access of a stent housed in the catheter tip **10** to the implantation location, it can be seen from FIGS. **6** and **7** that the catheter tip **10** has a stent holder **15** for releasably fixing of, for example, the second retaining region of a stent that can be housed in the catheter tip **10**. The retaining elements **16** of the stent holder **15** in the form of a crown are provided at the proximal end of the stent holder **15**.

Further, the catheter tip **10** of the insertion system **100** designed for transarterial/transfemoral access comprises a mounting device for mounting a heart valve stent, where required, with a heart valve prosthesis fastened to it. In detail, the mounting device of the catheter tip **10** consists of a first sleeve-shaped member **11**, particularly for accommodating the positioning hoops of a stent, and a second sleeve-shaped member **21**, in particular for accommodating the heart valve prosthesis fastened to it, when required.

The first operating means **71** of the handle **70** co-operates in the embodiment according to FIGS. **6** and **7** with the first sleeve-shaped member **11** of the catheter tip **10** so that, on actuation of the first operating means **71**, by transfer of a defined longitudinal displacement stroke, a previously definable longitudinal displacement of the first sleeve-shaped member **11** can be effected relative to the stent holder **15**. On the other hand, with the insertion system **100** according to FIGS. **6** and **7**, the second operating means **81** of the handle **70** co-operates with the second sleeve-shaped member **21** of the catheter tip **10** so that, on actuation of the second operating means **81**, by transfer of a defined longitudinal displacement stroke, a previously definable longitudinal displacement of the second sleeve-shaped member **21** of the catheter tip **10** relative to the stent holder **15** can be effected.

The second sleeve-shaped member **21**, which is used to house the retaining hoops of the stent with, where required, the heart valve prosthesis fastened to them, is located at the distal end region of the catheter tip **10**, while the first sleeve-shaped member **11** is located between the second sleeve-shaped member **21** and the handle **70**.

In the insertion system **100** shown in FIGS. **6** and **7**, the second force transmission means **41**, which connects the second operating means **81** of the handle **70** to the second sleeve-shaped member **21** of the catheter tip **10**, is preferably in the form of an inner catheter running inside the interior of the catheter or tube system. The first force transmission means **31**, which connects the first operating means **71** of the handle **70** to the first sleeve-shaped member **11** of the catheter tip **10**, is in the form of an outer catheter, in the interior of which the first force transmission means **31** runs in the form of the inner catheter.

On actuation on the second operating means **81**, the second sleeve-shaped member **21** can be moved relative to the stent holder **15** in the longitudinal direction L of the catheter tip **10** in a distal direction, thus away from the handle **70**, while, on actuation of the first operating means **71** of the handle **70**, the first sleeve-shaped member **11** of the

catheter tip **10** can be moved relative to the stent holder **15** in the longitudinal direction L of the catheter tip **10** in a proximal direction, and thus towards the handle **70**.

The manipulations of the respective sleeve-shaped members **11**, **21** of the catheter tip **10** that can be effected on actuation of the respective operating means **71**, **81** with the insertion system **100** of 100 designed for transarterial/transfemoral access in accordance with FIGS. **6** and **7** are described in detail in the following, with reference in particular to FIGS. **7***a* to **7***d*.

An embodiment of a transarterial/transfemoral insertion system **100** is shown in its four different functional states in FIGS. **7***a* to **7***d*. In detail, the insertion system **100** is shown in its first functional state in FIG. **7***a*, in which the catheter shaft **30** with the catheter tip **10** and, where required, with the stent accommodated in it can be inserted into the patient transarterially or transfemorally and advanced via the aorta to the implantation site.

In the first functional state of the insertion system **100** in accordance with FIG. **7***a*, the catheter tip **10** is completely closed, whereby the two sleeve-shaped members **11**, **21** of the catheter tip **10** overlap telescopically. The respective diameters of the sleeve-shaped members **11**, **21** are chosen so that the folded-up retaining hoops of a stent, with the heart valve prosthesis fastened to them where required, can be housed in the second sleeve-shaped member **21**. The folded-up positioning hoops of the stent housed between the second sleeve-shaped member **21** and the first sleeve-shaped member **11** are held together in their folded form.

The second retaining region of the stent is shown in the first functional state of the insertion system **100**, as shown in FIG. **7***a*, with the stent holder **15** fixed at the proximal end of the catheter tip **10**. For this purpose, the retaining elements (retaining rings etc.) provided at the second retaining region of the stent are engaged with retaining elements **16** of the stent holder **15**.

The retaining elements **16** of the stent holder **15** are covered by the first sleeve-shaped member **11** of the catheter tip **10** in the first functional state shown in FIG. **7***a*, so that an engagement between retaining elements provided on the second retaining region of a stent and retaining elements **16** of the stent holder **15** would be possible.

The first functional state of the insertion system **100** shown in FIG. **1***a* is maintained during the transarterial insertion procedure. On reaching the implantation location, the insertion system **100** is transferred from the first functional state shown in FIG. **7***a* to the second functional state shown in FIG. **7***b*, by transferring the first operating means **71** (shown in the embodiment of the wheel in FIG. **7**) from the first position into the second position. The longitudinal displacement stroke transferred by actuation of the first operating means **71** to the first sleeve-shaped member **11** of the catheter tip **10** effects a displacement of the first sleeve-shaped member **11** relative to the stent holder **15** in the proximal direction, thus towards the handle **70**.

The longitudinal displacement stroke executed on the first sleeve-shaped member **11** of the catheter tip **10** during the transition from the first functional state (see FIG. **7***a*) to the second functional state (see FIG. **7***b*) by the first operating means **71** of the handle **70** via a corresponding first force transmission means **31** is previously defined so that the first sleeve-shaped member **11** is displaced relative to the stent holder **15** in the proximal direction just so far that the positioning hoops of a stent housed in the catheter tip **10** would be released, though the distal end of the first sleeve-shaped member **11** of the catheter tip **10** would still cover the retaining elements **16** of the stent holder **15**, so that the engagement between the retaining elements provided at the second retaining region of the stent and the retaining elements **16** of the stent holder **15** would be secure.

Since the second sleeve-shaped member **21** is not manipulated during the transition from the first functional state into the second functional state, the first retaining region of a stent housed in the catheter tip **10** with the heart valve prosthesis fastened to it would continue to be housed in its folded together state in the sleeve-shaped element of the second sleeve-shaped member **21**.

The positioning hoops of a stent housed in the catheter tip **10** released in the second functional state of the insertion system **100** are opened as a result of the radial forces acting on them and can thus be positioned in the pockets of the insufficient native heart valve. Following appropriate positioning of the positioning hoops of the stent in the pockets of the native heart valve, the insertion system **100** is transferred from the second functional state shown in FIG. **7***b* into the third functional state shown in FIG. **7***c*. This is done my manipulation of the second operating means **81**, after the securing element **89** associated with the second operating means **81** has been removed.

On actuation of the second operating means **81**, the second sleeve-shaped member **21** of the catheter tip **10** associated with the second operating means **81** is moved relative to the stent holder **15** by a previously established longitudinal displacement stroke defined with the second operating means **81** in a distal direction, thus away from the handle **70**. The longitudinal displacement stroke acting on the second sleeve-shaped member **21** is chosen so that the sleeve-shaped member **21** no longer covers the first retaining region of a stent housed in the catheter tip **10** with the heart valve prosthesis fastened to it, where required, and thus releases the first retaining region of the stent Due to the action of the radial forces, the distal retaining region of the stent with the heart valve prosthesis attached to it, where required, unfolds completely.

Since the first operating means **71** of the handle **70** and the associated first sleeve-shaped member **11** of the catheter tip **10** are not manipulated during the transition from the second functional state in accordance with FIG. **7***b* into the third functional state in accordance with FIG. **7***c*, the distal end region of the first sleeve-shaped member **11** continues to cover the retaining elements **16** of the stent holder **15**, so that the engagement between the retaining elements of a stent housed in the catheter tip **10** and the retaining elements **16** of the stent holder **15** is secure and the proximal retaining region of the stent is in its folded-up state. This anchorage of the stent to the catheter tip **10** of the insertion system **100** allows an explantation of a stent that is already partially unfolded by returning the insertion system **100** from the third functional state, by appropriate manipulation of the second operating means **81** of the handle **70**, to the second functional state and then by suitable actuation of the first operating means **71** transfer to the first functional state.

If an explantation of the stent with the heart valve prosthesis attached to it, where required, is unnecessary, the insertion system **100** is transferred from the third functional state shown in FIG. **7***c* into the fourth functional state shown in FIG. **7***d*, by turning the first operating means **71** of the handle **70** further from the second position to the third position after removal of the securing element **79** (locking element). This manipulation of the first operating means **71** that can be effected after removal of the securing element **79** results in a further defined movement of the first sleeve-shaped member **11** relative to the stent holder **15** of the catheter tip **10** in a proximal direction, thus towards the

handle **70**. The longitudinal displacement stroke executed on the first sleeve-shaped member **11** is chosen so that the distal end of the first sleeve-shaped member **11** no longer covers the retaining elements **16** of the stent holder **15**, as a result of which an engagement between the retaining elements of a stent housed in the catheter tip **10** and the retaining elements **16** of the stent holder **15** can be released, which would also lead to a complete release of the second retaining region of the stent and a complete separation of the stent from the catheter tip **10** and correspondingly to a complete unfolding of the stent.

The four functional states of the insertion system **100** designed for transarterial/transfemoral access, previously described with reference to FIGS. **7***a* to **7***d*, are shown in reverse order in FIGS. **6***a* to **6***d* to clarify the procedure for loading a stent into the catheter tip **10** of the insertion system **100**. Comparison between FIGS. **6***a* to **6***d* and FIGS. **7***a* to **7***d* show that the insertion system **100** can be loaded with a heart valve stent by transferring the insertion system **100**, starting from its fourth functional state in accordance with FIG. **6***a* (see FIG. **7***d*), into its third functional state in accordance with FIG. **6***b* (see FIG. **7***c*) after a stent has been positioned between the stent holder **15** on the second sleeve-shaped member **21** with its first retaining region in the direction of the second sleeve-shaped member **21**. Then the remaining functional states of the insertion system **100** are taken up in steps until the insertion system **100** shown in FIG. **6***d* is finally in its first functional state with the closed catheter tip **10**.

Reference is made to FIG. **9** for describing an exemplary embodiment of the catheter tip **10**. Elements in FIG. **9** that are generally similar to previously described elements have the same reference numbers compared with the reference numbers in FIGS. **1** to **7** previously used for the similar elements.

An exemplary embodiment of a catheter shaft **30** is described in the following, with reference to the illustration in FIG. **9**. This catheter shaft **30** can be used with an insertion system **100** designed for transarterial or transfemoral access.

In detail, FIG. **9** shows an exemplary embodiment of a shaft for an insertion system **100** in a cross-sectional elevation.

The catheter shaft **30** exhibits a first force transmission means **31** in the form of a first catheter tube **32**, whereby this first catheter tube **32** is used to connect the first operating means **71** of the handle **70** to the first sleeve-shaped member **11** of the catheter tip **10**. As can be seen in particular from the illustration in FIG. **1**, the first force transmission means **31** implemented as a first catheter tube **32** may be clamped between a screw cap **74'** and the first slide **74** of the first operating means **71** and consequently is permanently connected to the first slide **74**. The distal-side end region of the first catheter tube **32** merges into the first sleeve-shaped member **11** of the catheter tip **10** in the form of the stent sheath.

The second force transmission means **41** of the catheter shaft **30** used with an insertion system **100** designed for transarterial or transfemoral access is preferably implemented as a second catheter tube **42**. The proximal-side end region of the second catheter tube **42** is connected to the second operating means **81** of the handle **70**. The distal-side end region of the second catheter tube **42** is connected to the catheter end tip **25** of the catheter tip **10**. The second sleeve-shaped member **21** of the catheter tip **10** is permanently connected by means of its distal-side end to the end tip **25** of the catheter tip **10** so that, on actuation of the second operating means **81** via the force transmission means **41** in the form of the second catheter tube **42**, a tensile or compressive force can be transmitted to the second sleeve-shaped member **21** of the catheter tip **10**.

The exemplary embodiment of the catheter tip **10** further comprises a stent holder **15** at the proximal end section of the catheter tip **10**. The stent holder **15** has a passageway extending there through. The distal end section of the second force transmitting means **41** (second catheter tube **42**) passes through the passageway of the stent holder **15** and terminates at the second sleeve-shaped member **21**.

The respective sleeve-shaped members **11**, **21** of the catheter tip **10** can be manipulated by corresponding operating means **71**, **81** of a handle **70** (not shown in FIG. **9**). In detail, the first sleeve-shaped member **11** of the catheter tip **10** is connected with a first operating means **71** of a handle **70** by using a first force transmitting means **31**. On the other hand, the second sleeve-shaped member **21** of the catheter tip **10** is connected to a second operating means **81** of the handle **70** by using a second force transmitting means **41**. In a preferred embodiment of the catheter shaft **30**, the first force transmitting means **31** is constituted by a first catheter tube **32** defining a first lumen, wherein the second force transmitting means **41** is constituted by a second catheter tube **42** defining a second lumen. The second catheter tube **42** has a cross-section less than the cross-section of the first catheter tube **32**, wherein the first catheter tube **32** is disposed concentrically and coaxially with the second catheter tube **42**.

As shown in FIG. **9**, the distal end section of the second catheter tube **42** passes through the opened front face of the second sleeve-shaped member **21** and terminates in a cone-shaped end tip **25** of the catheter system **1**, wherein the base of this cone-shaped end tip **25** defines the distal front face of the second sleeve-shaped member **21**.

The end tip **25** of the catheter system **1** is preferably a soft catheter end tip, for example a soft polymeric catheter end tip.

At its distal end, the first catheter tube **32** terminates after an intermediate flared section in a section with wider cross-section defining the first sleeve-shaped member **11** of the catheter tip **10**. As can be seen from FIG. **9**, the flared section is formed integrally with the distal end section of the first catheter tube **32**. The flared section has a length greater than the length of a collapsed stent to be accommodated in the catheter tip **10**, wherein the difference in the length between the flared section and the stent in its collapsed state represents the length of the stent holder **15**.

The catheter shaft **30**, which is connected to the catheter tip **10** depicted in FIG. **9**, also comprises a guiding tube **52** of the kind as previously described with reference to the exemplary embodiment depicted in FIG. **1**.

The distal end of the guiding tube **52** terminates proximal to the catheter tip **10**. The guiding tube **52** defines a passageway within which the first and second catheter tube **42** **32**, **42** are received such as to be movable relative to the guiding tube **52**.

The distal end of the guiding tube **52** may be tapered such that it abuts the first catheter tube **32** in one of its possible positions on the catheter shaft **30**.

Reference is made to FIG. **10***a*, which is a cross-sectional view of a catheter shaft **30** according to an exemplary embodiment.

As can be seen from the illustration in FIG. **10***a*, the second force transmission means **41** in the form of the second catheter tube **42** runs along the neutral fibre of the catheter shaft **30** inside the first catheter tube **32**. The space

between the first catheter tube **32** and the second catheter tube **42** may be filled with a filler material, so that a filler body **40** is formed. The filler material is preferably a relatively elastic plastic material to allow the catheter shaft **30** to bend overall. The filler body **40** is used for connecting the stent holder **15** of the catheter tip **10** to the body **70'** of the handle **70**.

Alternatively, a stent holder tube **62** may be used for connecting the stent holder **15** of the catheter tip **10** to the body **70** of the handle **70**. The stent holder tube **62** may have a distal end connected to the stent holder **15**, a proximal end connected to the body **70'** of the handle **70** and a passageway extending through the stent holder tube **62**. Preferably, the stent holder tube **62** has a cross-section less than the cross-section of the first catheter tube **32** and greater than the cross-section of the second catheter tube **42**, wherein the first catheter tube **32** is disposed concentrically and coaxially with the stent holder tube **62** thereby accommodating the stent holder tube **52** such that the first catheter tube **32** is moveable relative to the stent holder tube **62**. The passageway of the stent holder tube **62** shall have a diameter sufficient to accommodate the second catheter tube **42** such that the second catheter tube **42** is moveable relative to the stent holder tube **62**.

As depicted in FIG. **1**, the filler body **40** (or the stent holder tube **62**) may be connected by means of a fixing **87** to the body **70'** of the handle **70**. The proximal-side end region of the stent holder **15** attaches at the distal-side end region of the filler body **40** (see FIG. **8**). The connection between the stent holder **15** and the filler body **40** is preferably chosen so that it allows rotation of the stent holder **15** relative to the filler body **40**. This is especially necessary for control of the rotation of the positioning hoops of the already partially released stent during the implantation procedure (see FIG. **12***a*).

As an alternative, the complete catheter system **1** can be rotated for appropriate positioning of a stent connected with the catheter tip **10** and, in particular the positioning hoops of an already partially released stent during the implantation procedure. This is possible due to an appropriate transmission of torque and the flexibility of the catheter system **1**.

In case, a stent holder tube **62** is used for connecting the stent holder **15** of the catheter tip **10** to the body **70'** of the handle **70**, the stent holder tube **62** may be rotatable relatively to the first and second catheter tubes **32**, **42** about the longitudinal axis L of the catheter system **1**. This will be described later in more detail with reference to the exemplary embodiment depicted in FIG. **10***b*.

On the other hand, the second force transmission means **41** in the form of the second catheter tube **42** can be turned about the longitudinal direction L, for example, by means of a rotatable cap **98** which may be provided at the proximal end region of the handle **70**. This rotary movement is transferred from the second catheter tube **42** direct to the end tip **25** of the catheter tip **10** and thus to the second sleeve-shaped member **21** of the catheter tip **10**.

It is particularly preferred that the second catheter tube **42** runs through the body of the stent holder **15** and cooperates with the stent holder **15** with the aid of a suitable toothing, to transmit a turning moment exerted by means of the rotary cap of the handle **70** on the second catheter tube **42** to the stent holder **15**, while tensile or compression forces acting in the longitudinal direction L of the catheter tip **10** are not transmitted from the second catheter tube **42** to the stent holder **15**.

As can also be seen in the illustration in FIG. **10***a*, a least one fluid channel **43** may be provided in the filler body **40** of the catheter shaft **30**, connected at its proximal-side end to an injection adapter **99***b* (see FIG. **2**) and at its distal-side end correspondingly to the catheter tip **10**, consequently ensuring supply of fluid to the catheter tip **10** and draining of fluid from the catheter tip **10**.

Furthermore, a channel may be provided in the filler body **40** for accommodating a control wire (control wire **35**—see FIG. **8**), with an operating means may cooperate with a flexural link region, in case the catheter shaft **30** is provided with such a flexural link region (see FIG. **3** and FIG. **2**). In the illustration in FIG. **8**, the distal-side end of a control wire **35** is fixed to the proximal-side end region of the stent holder **15**.

Reference is made to FIG. **10***b*, which is a cross-sectional view of a catheter shaft **30** according to an alternative exemplary embodiment.

According to the embodiment depicted in FIG. **10***b*, the first force transmitting means **31** may be constituted by a first catheter tube **32** defining a first lumen and the second force transmitting means **41** is constituted by a second catheter tube **42** defining a second lumen. The second catheter tube **42** may have a cross-section less than the cross-section of the first catheter tube **32**. The first catheter tube **32** may be disposed concentrically and coaxially with the second catheter tube **42** and the second catheter tube **42** is received within the first lumen defined by the first catheter tube **32**.

A stent holder tube **62** is provided for connecting the stent holder **15** to the handle **70**, said stent holder tube **62** having a distal end connected to the stent holder **15** and a proximal end connected to a body **70'** of the handle **70**.

As can be seen from FIG. **10***b*, the stent holder tube **62** may have a cross-section less than the cross-section of the first catheter tube **32**. In particular, the first catheter tube **32** may be disposed concentrically and coaxially with both, the second catheter tube **42** on the one hand and the stent holder tube **62** on the other hand. Preferably, the stent holder tube **62** has a cross-section less than the cross-section of the first catheter tube **32** and greater than the cross-section of the second catheter tube **42** such that the stent holder tube **62** is received within the first lumen defined by the first catheter tube **32** and the second catheter tube **42** is received within a passageway defined by the stent holder tube **62**. The passageway defined by the stent holder tube **62** has a diameter sufficient to accommodate the second catheter tube **42** such that the second catheter tube **42** is moveable relative to the stent holder tube **62**.

The second lumen defined by the second catheter tube **42** has a diameter sufficient to accommodate a guide wire **180**. The second catheter tube **42** may be made from a rigid material including, for example, nitinol, stainless steel or a rigid plastic material. The material of the distal end section of the second catheter tube **42** may have an increased flexibility compared to the material of the proximal end section in order to allow the distal end section of the catheter shaft **30** to pass the aortic arch during insertion of the catheter tip **10**. For example, the guiding tube **52** may be a 17F-catheter tube and the first catheter tube **32** may be a 12F-catheter tube.

According to the exemplary embodiment depicted in FIG. **10***b*, the stent holder tube **62** is made of a rigid material, for example, a rigid plastic material, stainless steel or nitinol. The distal end of the stent holder tube **62** terminates in the stent holder **15** which is also made of a rigid material, for example, a rigid plastic material or stainless steel. The passageway defined by the stent holder tube **62** is aligned with a channel which passes through the stent holder **15**. In

this way, the second catheter tube **42** is accommodated in the passageway of the stent holder tube **62** and the channel of the stent holder **15** such as to be moveable relative to the stent holder tube **62** and the stent holder **15**.

The embodiments of the insertion system **100** designed for transarterial/transfemoral access may have a first injection adapter **99***a* at the proximal end of the handle **70**. This first injection adapter **99***a* is used for flushing the insertion system **100** and as outlet of a guide wire **180**, with the aid of which the actual introduction of the catheter shaft **30** with the catheter tip **10** provided at the distal end of the catheter shaft **30** into the body of the patient is simplified. The catheter shaft **30**, the catheter tip **10** and the handle **70** are thereby threaded into the guide wire **180** and pushed along it, for example into the aorta and to the heart of the patient.

In the embodiments of the insertion system **100** designed for transarterial/transfemoral access, a second injection adapter **99***b* may further be provided, by means of which a liquid coolant etc. can be passed, for example, via the fluid channels **43** (see FIG. **10***a*) formed in the interior of the catheter shaft **30** to the catheter tip **10**. With the aid of such a liquid coolant, a stent accommodated in the catheter tip **10** can be appropriately cooled while the catheter tip **10** is being advanced to the implantation location, as long as the insertion system **100** is in its first functional state, in which the catheter tip **10** is completely enclosed by the telescopically arranged sleeve-shaped members **11** and **21**.

The provision of cooling that can be produced with the second injection adapter **99***b* for the stent accommodated in the catheter tip **10** is a particular advantage when a shape memory material is used as stent material and when the stent can deform under the effect of an external stimulus from a temporary form to a permanent form, whereby the temporary form exists in the first configuration of the stent (in the folded-up state, when the stent is accommodated in the catheter tip **10**) and the permanent form exists in the second configuration of the stent (in the expanded state of the stent after release of the stent from the catheter tip **10**).

In the embodiments of the insertion system **100** previously described, the guiding tube **52** is preferably made from a material allowing the guiding tube **52** to be capable of traversing a tortuous pathway in the body of the patient without kinking. For example, the guiding tube **52** may include an inner lubricious liner, an outer polymeric jacket, and a coil reinforcement between the inner and outer layers. In addition, it is preferred when at least on radiopaque band or member is incorporated within the guiding tube's material to allow precise location of the distal end of the guiding tube **52** for positioning accuracy.

On the other hand, the first and second catheter tubes **32**, **42** of the catheter shaft **30** are preferably made from flexible, sterilizable materials. These materials may include, for example, polyurethane, silicone, polyvinyl chloride (PVC) nylon and/or polyether block amide, e.g. Pebax®. Furthermore, the first catheter tube **32** and/or second catheter tube **42** are/is at least partly made from a less rigid material than the guiding tube **52**. In an exemplary embodiment, the first catheter tube **32** and/or the second catheter tube **42** are/is at least partly made of a braided wire construction. In addition, the stent holder tube **62** may also be at least partly made of a braided wire construction.

Individual features of different embodiments of this disclosure may be combined in any suitable manner.

A preferred embodiment of a medical device for treatment of a heart valve stenosis and/or heart valve insufficiency in a patient is described in the following with reference to FIGS. **12***a* to **12***c*. As depicted, the medical device exhibits an insertion system **100** designed for transarterial transfemoral access, as has been described in detail previously, for example, with reference to FIGS. **1** to **10**.

In addition to the insertion system **100**, the medical device has an expandable heart valve stent **150** mounted in the catheter tip **10** of the insertion system **100**, to which a heart valve prosthesis **160** to be implanted is fastened. In the first functional state, not shown, the stent **150** exhibits a first, previously definable configuration, in which it is in its folded-together state. On the other hand, the stent **150** is designed to adopt a second previously definable configuration in the implanted state, in which it exists in its expanded state.

Through the use of the insertion system **100** described above, during the implantation procedure, the stent **150** is transferred sequentially, following a previously definable sequence of events in steps from its first previously defined configuration into its second previously defined configuration.

In detail, the stent **150** that is used with the medical device in accordance with the depiction in FIGS. **12***a* to **12***c* exhibits a first retaining region, to which the heart valve prosthesis **160** is attached. Further, the stent **150** comprises a second retaining region with three retaining elements **151**, each in the configuration of retaining rings, which can be brought in to a releasable engagement with the retaining elements **16** of the stent holder **15** provided in the catheter tip **10**.

In addition, the stent **150** has three retaining hoops **153** to accommodate the heart valve prosthesis **160** and three positioning hoops **154** for automatic positioning of the stent **150** at the implantation site, whereby the respective positioning hoops **154** of the stent **150** are designed in functional and structural respects to engage the pockets **170** of the native heart valve during the implantation procedure and in the implanted state of the stent **150**, in particular from the second functional state of the insertion system **100**. In detail, each positioning hoop **154** and its associated retaining hoop **153** has an essentially U or V-shaped structure, which is closed towards the distal end of the stent **150**.

The stent **150**, which together with the insertion system **100** forms the basis of the medical device, is especially suitable for insertion into the body of a patient with the aid of the insertion system **100** with minimal invasiveness. The distinctive feature of the stent **150** is that the three positioning hoops **154** of the stent **150** undertake the function of automatic positioning of the stent **150** with the heart valve prosthesis **160** attached to it in the aorta of the patient. The positioning hoops **154** have radiused head sections, which engage in the pockets **170** of the insufficient heart valve to be replaced by the heart valve prosthesis during positioning of the stent **150** at the implantation site. The provision of a total of three positioning hoops **154** takes care of the necessary positioning accuracy in the rotary direction.

In this state shown in **12***a*, the catheter tip **10** and the catheter shaft **30** of the transarterial or transfemoral insertion system **100** has been inserted by a puncture of the groin artery of the patient and the catheter tip **10** has been advanced to the implantation site with the aid of a guide wire **180**. In detail, the insertion system **100** to be used is shown already in its second functional state in FIG. **12***a*. The second functional state of the insertion system **100** designed for transarterial or transfemoral access has been described previously, for example with reference to FIG. **7***b*.

In the second functional state, the first sleeve-shaped member **11** of the catheter tip **10** has already moved by a first predetermined amount of movement in a proximal direction,

and thus towards the handle **70**, leading to a release of the positioning hoops **154** of the stent **150**. These already expanded positioning hoops **154** of the stent **150** shown in FIG. **12***a* are positioned—where necessary by a suitable rotation of the stent holder **15** of the catheter tip **10**—in the pockets **170** of the native heart valve position. After positioning of the positioning hoops **154** in the pockets **170** of the native heart valve is complete, the insertion system **100** is transferred from its second functional state (see FIG. **7***b*) into its third functional state (see FIG. **7***c*).

The manner in which the insertion system **100** is transferred into its third functional state has been described previously, for example with reference to FIG. **7***c*, FIG. **12***b* shows the insertion system **100** in accordance with FIG. **12***a*, in which the second sleeve-shaped member **21** has been displaced in a distal direction so that the first retaining region of the stent **150** with the retaining hoops **153** and the heart valve prosthesis **160** attached to them are released. These components are opened as a result of the radial forces attacking them, whereby the old heart valves are clamped between the positioning hoops **154** and the retaining hoops **153**.

After the functioning of the heart valve prosthesis **160** has been checked, the insertion system **100** is then transferred from its third functional state into its fourth functional state, as has previously been described, for example with reference to FIG. **7***d*. FIG. **12** shows the effect of the transfer of the insertion system **100** into its fourth functional state on the heart valve prosthesis **160** and the stent **150**.

In detail, it can be seen that, in the fourth functional state of the insertion system **100**, the first sleeve-shaped member **11** of the catheter tip **10** has been displaced further in a proximal direction, as a result of which the anchorage of the retaining elements **151** on the second retaining region of the stent **150** is released. This has the result that that the second retaining region of the stent **150** can also expand and press against the vessel wall.

Finally, the catheter tip **10** and the catheter shaft **30** of the insertion system **100** are removed again from the body of the patient.

When the heart valve stent **150** is implanted, the old (insufficient) heart valve is pressed against the vessel wall at the same time due to the self-expanding characteristic of the stent **150**, as can be seen in particular in FIG. **12***c*. In particular, the semilunar heart valves of the insufficient, native heart valve are damped between the positioning hoops **154** and the retaining hoops **153** because of the expansion of the stent **150**, in addition to which the heart valve prosthesis **160** located on the first retaining region of the stent **150** is optimally positioned and is stably anchored.

The disclosed solutions provide an improved insertion system **100** with the stent mountable in the catheter tip **10** of the insertion system **100**. The stent may be inserted transarterially by the special insertion system **100** and can be optimally positioned, so that a heart valve prosthesis sewn on the first retaining region of the stent can undertake the function of the insufficient or stenosed native heart valve. The radial forces developed due to the self-expanding characteristic of the stent ensure a secure anchoring in the area of the aorta. The catheter system **1** of the insertion system **100** is preferably an 18 to 21F introducer, which is compatible with 21F-insertion tubes and a 0.035" guide wire **180**. The length of the catheter system **1** for transarterial access should be at least 100 cm. The optionally provided flexural link region at the distal region of the catheter system **1** is preferably approximately 30 cm.

A further embodiment of a catheter tip **10** for an insertion system for transfemoral/transarterial insertion of an expandable heart valve stent is shown in its four different functional states in FIGS. **13***a* to **13***d*. In detail, the catheter tip **10** is shown in its first functional state in FIG. **13***a*, in which the catheter shaft with the catheter tip **10** and, where required, with the stent accommodated in it can be inserted into the patient transarterially or transfemorally and advanced via the aorta to the implantation site.

In the first functional state of the catheter tip **10** in accordance with FIG. **13***a*, the catheter tip **10** is completely closed, whereby the two sleeve-shaped members **11**, **21** of the catheter tip **10** abut. In this embodiment, the two sleeve-shaped members **11**, **21** of the catheter tip **10** have an equal outer cross-section diameter, thereby not forming a step in the state depicted in FIG. **13***a*. The respective inner diameters of the sleeve-shaped members **11**, **21** are chosen so that the folded-up retaining hoops of a stent, with the heart valve prosthesis fastened to them where required, can be housed in the second sleeve-shaped member **21**. The folded-up positioning hoops of the stent housed between the second sleeve-shaped member **21** and the first sleeve-shaped member **11** are held together in their folded form.

In the first functional state of the catheter tip **10**, as shown in FIG. **13***a*, the second retaining region of the stent is fixed with the stent holder **15** at the proximal end of the catheter tip **10**. For this purpose, the retaining elements (retaining rings etc.) provided at the second retaining region of the stent are engaged with retaining elements **16** of the stent holder **15**.

The retaining elements **16** of the stent holder **15** are covered by the first sleeve-shaped member **11** of the catheter tip **10** in the first functional state shown in FIG. **13***e*, so that an engagement between retaining elements provided on the second retaining region of a stent and retaining elements **16** of the stent holder **15** would be possible.

The first functional state of the catheter tip **10** shown in FIG. **13***e* is maintained during the transarterial insertion procedure. On reaching the implantation location, the catheter tip **10** is transferred from the first functional state shown in FIG. **13***a* to the second functional state shown in FIG. **13***b*, by transferring the first operating means of the handle (first operating means **71** shown in the embodiment of the wheel in FIG. **7**) from the first position into the second position. The longitudinal displacement stroke transferred by actuation of the first operating means **71** to the first sleeve-shaped member **11** of the catheter tip **10** effects a displacement of the first sleeve-shaped member **11** relative to the stent holder **15** in the proximal direction, thus towards the handle **70**.

The longitudinal displacement stroke executed on the first sleeve-shaped member **11** of the catheter tip **10** during the transition from the first functional state (see FIG. **13***a*) to the second functional state (see FIG. **13***b*) by the first operating means **71** of the handle **70** via a corresponding first force transmission means **31** is previously defined so that the first sleeve-shaped member **11** is displaced relative to the stent holder **15** in the proximal direction just so far that the positioning hoops of a stent housed in the catheter tip **10** would be released, though the distal end of the first sleeve-shaped member **11** of the catheter tip **10** would still cover the retaining elements **16** of the stent holder **15**, so that the engagement between the retaining elements provided at the second retaining region of the stent and the retaining elements **16** of the stent holder **15** would be secure.

Since the second sleeve-shaped member **21** is not manipulated during the transition from the first functional state into the second functional state, the first retaining region of a

stent housed in the catheter tip **10** with the heart valve prosthesis fastened to it would continue to be housed in its folded together state in the sleeve-shaped element of the second sleeve-shaped member **21**.

The positioning hoops of a stent housed in the catheter tip **10** released in the second functional state of the catheter tip **10** are opened as a result of the radial forces acting on them and can thus be positioned in the pockets of the insufficient native heart valve. Following appropriate positioning of the positioning hoops of the stent in the pockets of the native heart valve, the catheter tip **10** is transferred from the second functional state shown in FIG. **13***b* into the third functional state shown in FIG. **13***c*. This is done my manipulation of the second operating means **81** of the handle, after the securing element **89** associated with the second operating means **81** has been removed.

On actuation of the second operating means **81** of the handle, the second sleeve-shaped member **21** of the catheter tip **10** associated with the second operating means **81** is moved relative to the stent holder **15** by a previously established longitudinal displacement stroke defined with the second operating means **81** in a distal direction, thus away from the handle **70**. The longitudinal displacement stroke acting on the second sleeve-shaped member **21** is chosen so that the sleeve-shaped member **21** no longer covers the first retaining region of a stent housed in the catheter tip **10** with the heart valve prosthesis fastened to it, where required, and thus releases the first retaining region of the stent. Due to the action of the radial forces, the distal retaining region of the stent with the heart valve prosthesis attached to it, where required, unfolds completely.

Since the first operating means **71** of the handle **70** and the associated first sleeve-shaped member **11** of the catheter tip **10** are not manipulated during the transition from the second functional state in accordance with FIG. **13***b* into the third functional state in accordance with FIG. **13***c*, the distal end region of the first sleeve-shaped member **11** continues to cover the retaining elements **16** of the stent holder **15**, so that the engagement between the retaining elements of a stent housed in the catheter tip **10** and the retaining elements **16** of the stent holder **15** is secure and the proximal retaining region of the stent is in its folded-up state. This anchorage of the stent to the catheter tip **10** of the insertion system **100** allows an explantation of a stent that is already partially unfolded by returning the catheter tip **10** from the third functional state, by appropriate manipulation of the second operating means **81** of the handle **70**, to the second functional state and then by suitable actuation of the first operating means **71** transfer to the first functional state.

If an explantation of the stent with the heart valve prosthesis attached to it, where required, is unnecessary, the catheter tip **10** is transferred from the third functional state shown in FIG. **13***c* into the fourth functional state shown in FIG. **13***d*, by turning the first operating means **71** of the handle **70** further from the second position to the third position after removal of the securing element **79** (locking element). This manipulation of the first operating means **71** that can be effected after removal of the securing element **79** results in a further defined movement of the first sleeve-shaped member **11** relative to the stent holder **15** of the catheter tip **10** in a proximal direction, thus towards the handle **70**. The longitudinal displacement stroke executed on the first sleeve-shaped member **11** is chosen so that the distal end of the first sleeve-shaped member **11** no longer covers the retaining elements **16** of the stent holder **15**, as a result of which an engagement between the retaining elements of a stent housed in the catheter tip **10** and the retaining elements **16** of the stent holder **15** can be released, which would also lead to a complete release of the second retaining region of the stent and a complete separation of the stent from the catheter tip **10** and correspondingly to a complete unfolding of the stent.

In the embodiment of the catheter tip **10** depicted in FIGS. **13***a-e*, a stent holder tube **62** is used for connecting the stent holder **15** of the catheter tip **10** to the body **70'** of the handle **70**. The stent holder tube **62** has a distal end connected to the stent holder **15**, a proximal end connected to the body **70'** of the handle **70** and a passageway extending through the stent holder tube **62**. In addition, an extension portion **62'** of the stent holder tube **62** is provided, said extension portion extending from the distal end of the stent holder **15** to a support section **63**. The support section **63** may be a tapered portion which is completely accommodated in the second sleeve-shaped member **21** when the catheter tip **10** is in its first and second functional state (cf. FIGS. **13***a, b*).

Preferably, the stent holder tube **62** and its extension **62'** have a cross-section less than the cross-section of the first catheter tube **32** and greater than the cross-section of the second catheter tube **42** (not shown in FIGS. **13***a-e*), wherein the first catheter tube **32** is disposed concentrically and coaxially with the stent holder tube **62** thereby accommodating the stent holder tube **62** such that the first catheter tube **32** is moveable relative to the stent holder tube **62**. The passageway of the stent holder tube **62** shall have a diameter sufficient to accommodate the second catheter tube **42** such that the second catheter tube **42** is moveable relative to the stent holder tube **62**.

FIG. **13***e* shows a side elevation of the embodiment of the catheter tip **10** in accordance with FIG. **13***a-d*, whereby the catheter tip **10** is in its state after releasing a stent housed in the catheter tip **10** and ready to be removed again from the body of the patient. In this state of the catheter tip **10**, the first sleeve-shaped member **11** is pushed by manipulation of the first operating means **71** of the handle **70** such that the first sleeve-shaped member **11** is in its most distal position, in which the distal end of the first sleeve-shaped member **11** abuts against the proximal end of the second sleeve-shaped member **21** without any gap or step there between. For securing this gap and step free state, the distal end of the first sleeve-shaped members **11** is supported by the already mentioned support section **63**.

The disclosed solution is not limited to the preferred embodiment described in the attached drawings. On the contrary, combinations of the individual features described in detail are also possible.

List of reference numerals

1	catheter system
10	catheter tip
11	first sleeve-shaped member
15	stent holder
16	retaining elements
21	second sleeve-shaped member
25	catheter end tip
30	catheter shaft
31	first force transmission means
32	first catheter tube
34	flexural link region
36	channel
35	control wire
40	filler body
41	second force transmission means
42	second catheter tube
43	fluid channels
51	guiding means

-continued

List of reference numerals	
52	guiding tube
53	inlet port
62	stent holder tube
62'	extension of stent holder tube
63	support means
70	handle
70'	body of the handle
71	first operating means
72	first guide
73	first pusher
74	first slide
74'	screw cap
75	first stop
75	second stop
77	additional stop
77'	locking element
79	securing element
81	second operating means
82	second guide
83	second pusher
84	second slide
85	first stop
86	second stop
87	fixing
88	grip
89	securing element
96	third operating means
97	compression spring
97a	first stop
97b	second stop
98	turning mechanism/rotatable cap
99a	first injection adapter
99b	second injection adapter
100	insertion system
150	stent
151	retaining elements
153	retaining hoops
154	positioning hoops
160	heart valve prosthesis
170	pockets of native heart valve
180	guiding wire
L	longitudinal direction of insertion system 100

What is claimed is:

1. A delivery system for introducing an expandable stent having a distal end and a proximal end into a heart of a patient, the delivery system comprising a distal end portion comprising:

a catheter tube;

an end support coupled to a distal end of the catheter tube, a proximal surface of the end support being tapered;

a stent holder comprising an outer surface that is tapered, the stent holder positioned at the distal end portion and configured to directly mate with a proximal end of the expandable stent such that a distal end of the expandable stent is disposed closer to the end support than the proximal end of the expandable stent; and

a sheath movable relative to each of the catheter tube and the stent holder;

a handle at a proximal end of the delivery system, the handle configured to manipulate at least the stent holder,

wherein the distal end portion of the delivery system is configured to house the expandable stent comprising at least two positioning arches in a collapsed configuration such that the expandable stent is releasably engaged with the stent holder at the proximal end of the expandable stent,

wherein the handle comprises at least one actuator for sequentially releasing the expandable stent from the distal end portion, and

wherein the at least one actuator is configured to permit the at least two positioning arches to expand while at least a portion of the expandable stent remains in the collapsed configuration.

2. The delivery system of claim **1**, wherein the distal end portion further comprises an end tip that is cone-shaped.

3. The delivery system of claim **1**, wherein the catheter tube defines a lumen configured to receive a guidewire.

4. The delivery system of claim **1**, further comprising a shaft positioned between the handle and the distal end portion, wherein the shaft is flexible thereby permitting the distal end portion to navigate the aortic arch.

5. The delivery system of claim **1**, wherein the handle is configured to rotate the distal end portion about a longitudinal axis of the distal end portion.

6. The delivery system of claim **1**, wherein the stent holder is configured to releasably engage retaining elements extending from a proximal end of the expandable stent.

7. The delivery system of claim **1**, wherein the distal end portion comprises at least one radiopaque marker for positioning the distal end portion in the aortic valve.

8. A method for introducing an expandable stent having a distal end and a proximal end into a heart of a patient, the method comprising:

advancing a distal end portion of a delivery system through an aortic arch of a patient towards an aortic valve of the patient, the distal end portion comprising:

a catheter tube;

an end support coupled to a distal end of the catheter tube and comprising a proximal surface that is tapered;

a stent holder comprising an outer surface that is tapered, the stent holder positioned at the distal end portion and configured to directly mate with a proximal end of the expandable stent such that a distal end of the expandable stent is disposed closer to the end support than the proximal end of the expandable stent; and

a sheath movable relative to each of the catheter tube and the stent holder;

a handle at a proximal end of the delivery system, the handle configured to manipulate at least the stent holder and comprising at least one actuator for sequentially releasing the expandable stent from the distal end portion;

introducing the distal end portion through the aortic valve, wherein the expandable stent comprises at least two positioning arches and is housed in the distal end portion in a collapsed configuration such that the expandable stent is releasably engaged with the stent holder at the proximal end of the expandable stent;

manipulating the at least one actuator of the handle to permit the at least two positioning arches to expand while at least a portion of the expandable stent remains in the collapsed configuration; and

releasing the expandable stent from the stent holder to cause the expandable stent to transition to an expanded configuration within the aortic valve.

9. The method of claim **8**, wherein releasing the expandable stent comprises manipulating the stent holder using the handle to release the expandable stent.

10. The method of claim **8**, wherein the delivery system further comprising a flexible shaft positioned between the handle and the distal end portion, and further comprising using the handle to cause the flexible shaft to bend to navigate the aortic arch.

11. The method of claim **8**, further comprising sequentially releasing the expandable stent from the distal end portion using the handle.

12. The method of claim **8**, further comprising rotating the distal end portion about a longitudinal axis of the distal end portion using the handle.

13. The method of claim **12**, further comprising aligning the expandable stent with the aortic valve.

14. The method of claim **8**, wherein releasing the expandable stent from the stent holder comprises releasing retaining elements extending from a proximal end of the expandable stent.

15. The method of claim **8**, wherein the distal end portion further comprises at least one radiopaque marker, and further comprising visualizing the distal end portion in the aortic valve using the at least one radiopaque marker.

* * * * *