US 20250280923A1

(19) United States
(12) Patent Application Publication
Durflinger et al.
(10) Pub. No.: US 2025/0280923 A1
(43) Pub. Date: Sep. 11, 2025

(54) **SOLE STRUCTURE FOR ARTICLE OF FOOTWEAR**

(71) Applicant: **NIKE, Inc.**, Beaverton, OR (US)

(72) Inventors: **Nate Durflinger**, Beaverton, OR (US); **Christopher J. Lyke**, Portland, OR (US)

(73) Assignee: **NIKE, Inc.**, Beaverton, OR (US)

(21) Appl. No.: **19/214,646**

(22) Filed: **May 21, 2025**

Related U.S. Application Data

(63) Continuation of application No. 18/408,398, filed on Jan. 9, 2024, which is a continuation of application No. 17/393,271, filed on Aug. 3, 2021, now Pat. No. 11,896,080.

(60) Provisional application No. 63/064,534, filed on Aug. 12, 2020.

Publication Classification

(51) **Int. Cl.**

A43B 13/18	(2006.01)
A43B 13/14	(2006.01)
A43B 13/20	(2006.01)

(52) **U.S. Cl.**

CPC ***A43B 13/186*** (2013.01); ***A43B 13/14*** (2013.01); ***A43B 13/185*** (2013.01); ***A43B 13/20*** (2013.01)

(57) **ABSTRACT**

A sole structure for an article of footwear comprises a cushioning element including a first material and a cradle including a second material. The cradle is attached to the cushioning element and includes a first plate disposed against the cushioning element and a second plate spaced apart from the cushioning element, the second plate including an aperture. The sole structure additionally includes a bladder disposed within the cradle and including a first portion contacting the first plate and a second portion extending through the aperture of the second plate.

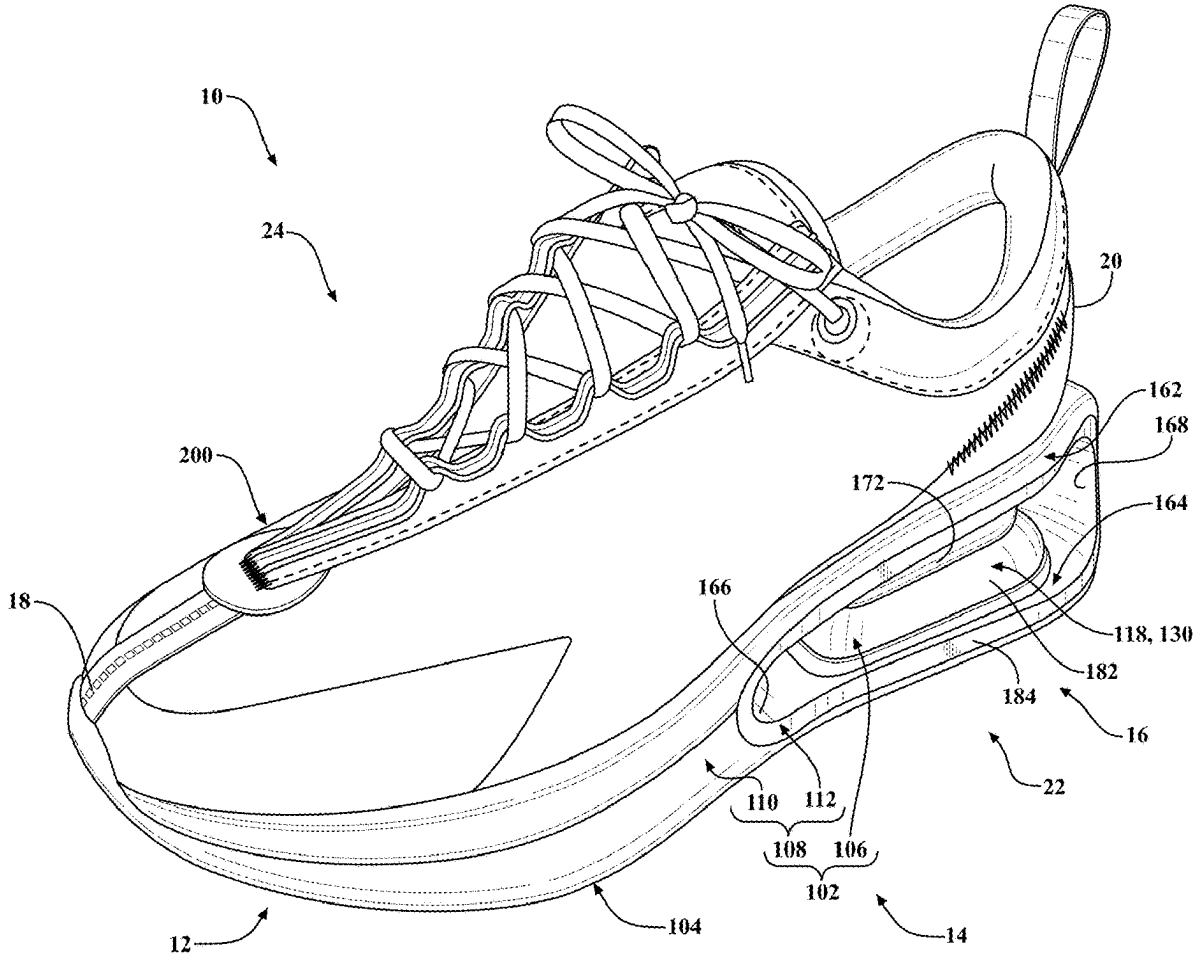

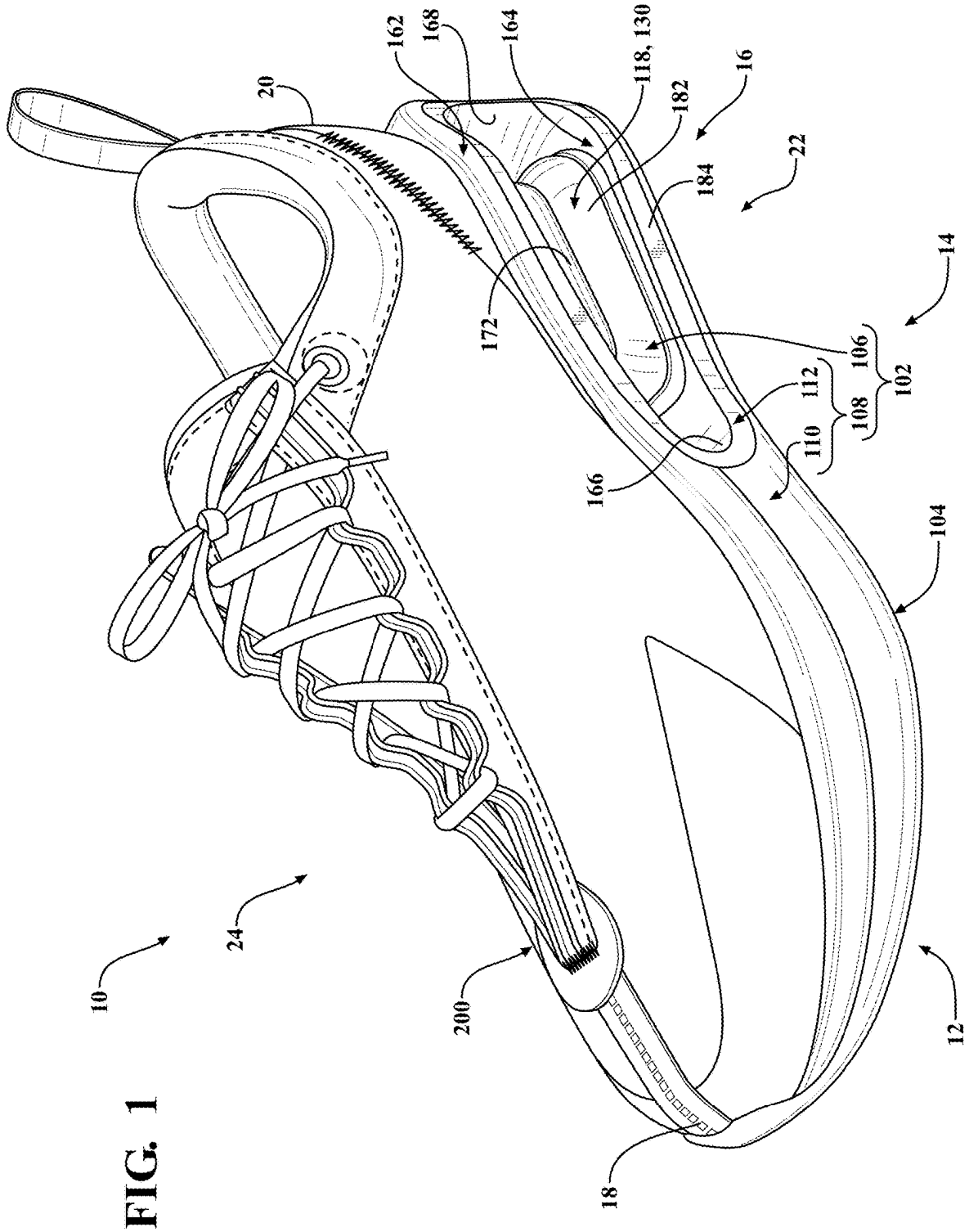
10
12
14
16
18
20
22
24
102
104
106
108
110
112
118, 130
162
164
166
168
172
182
184
200

FIG. 1

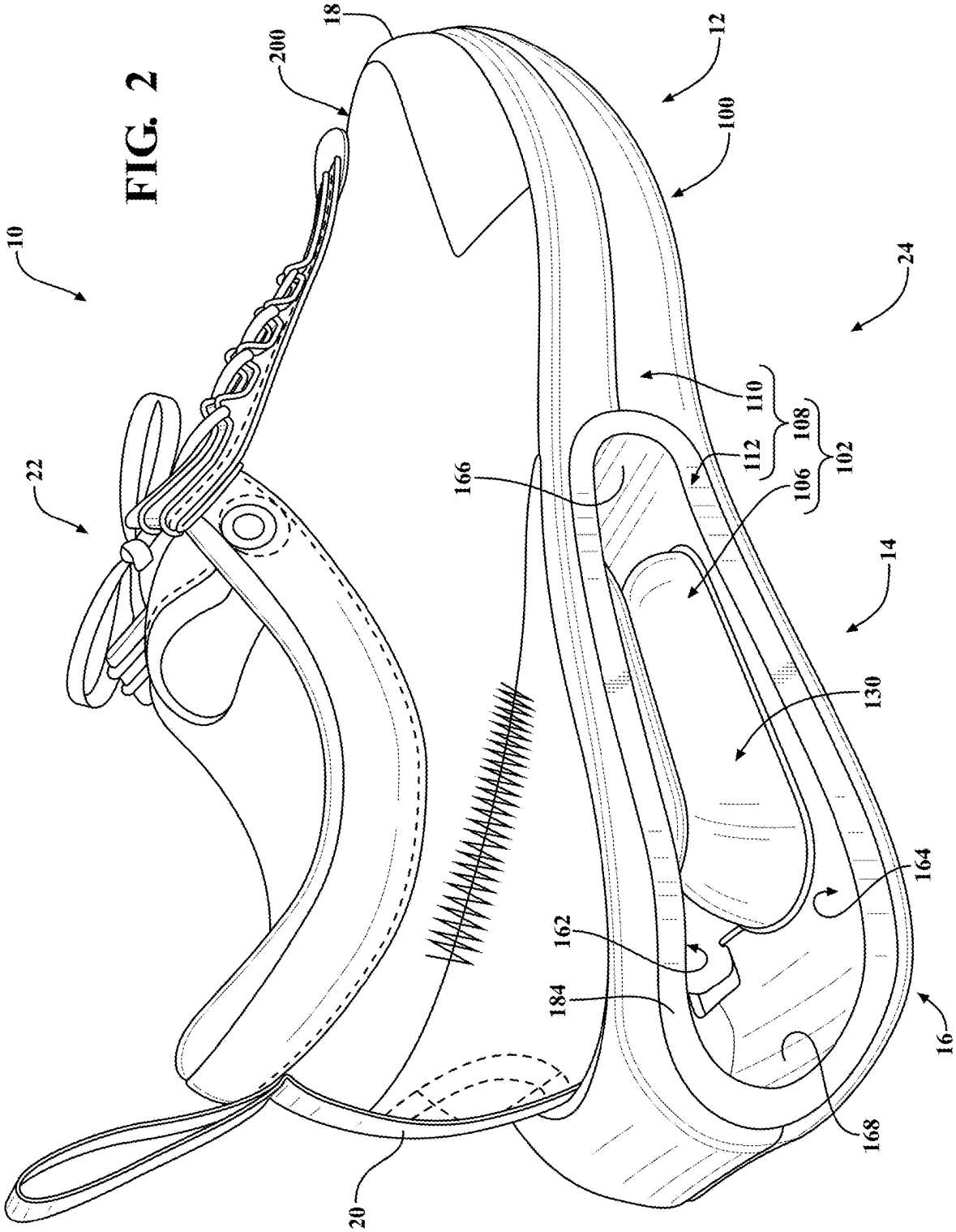
10
22
200
18
12
100
24
110
108
112
102
106
166
14
130
164
162
184
16
168
20

FIG. 2

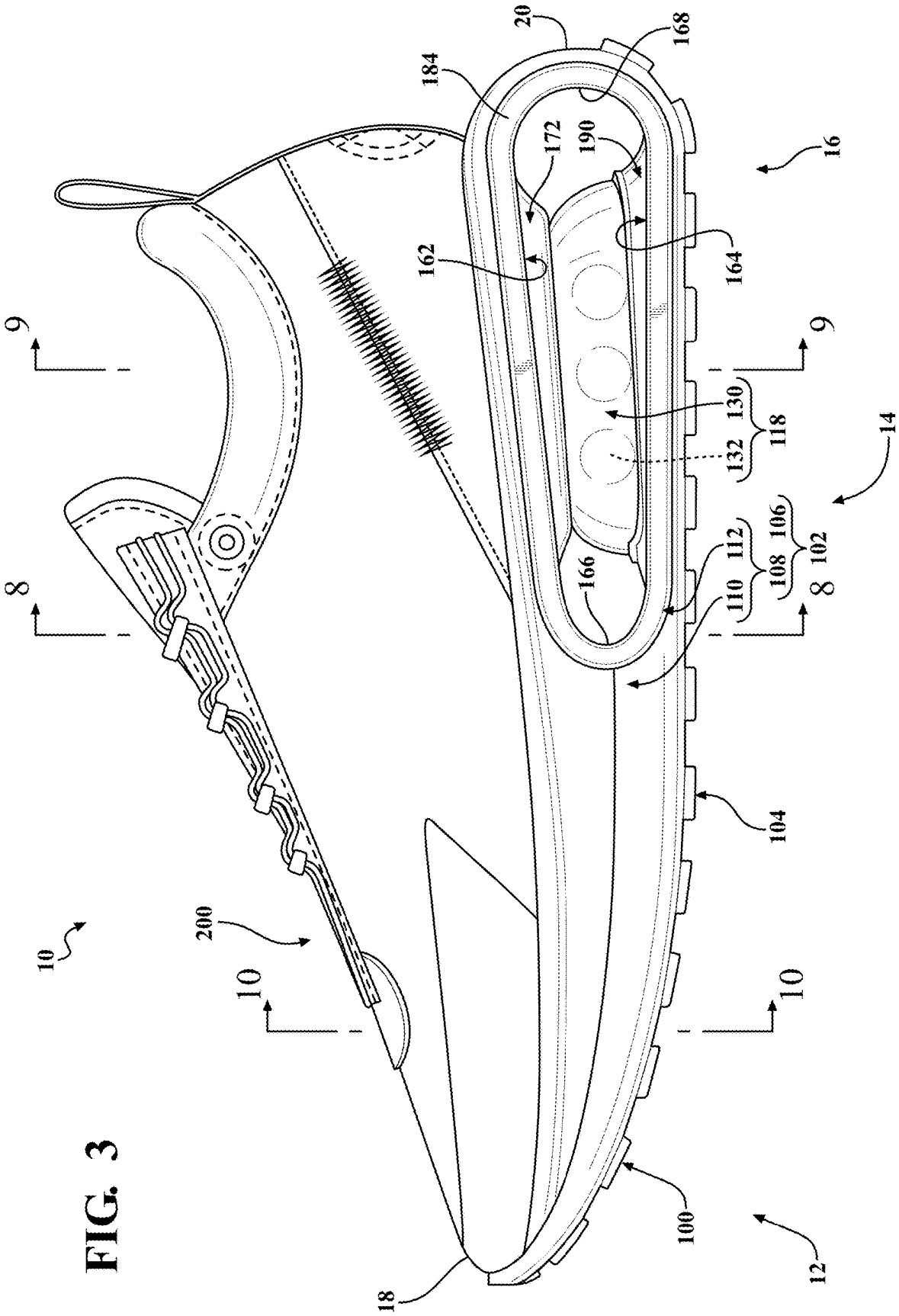
20
168
184
172
190
16
162
164
9
9
130
118
132
14
106
112
102
108
166
110
8
8
104
200
10
10
10
100
12
18

FIG. 3

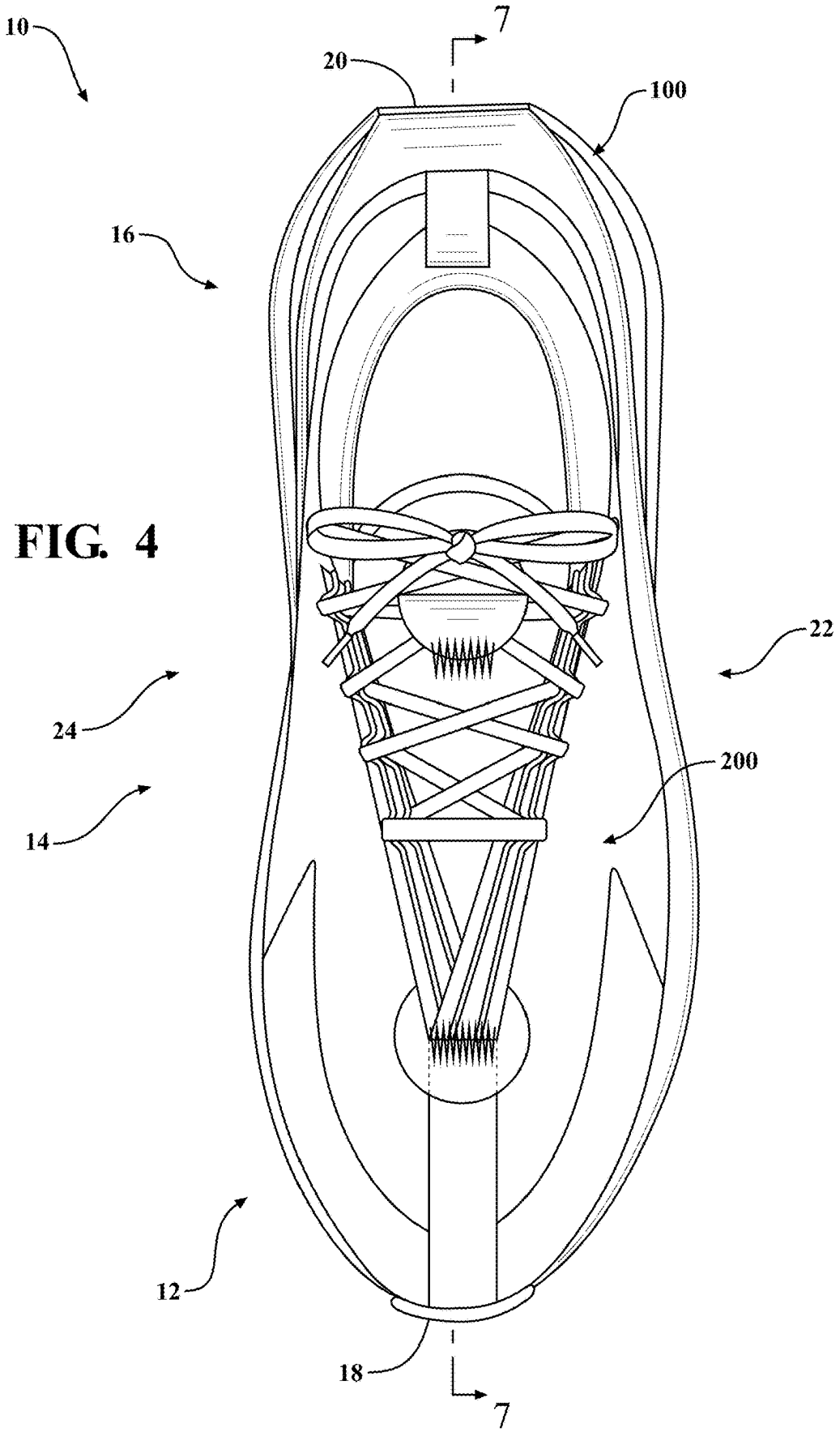

FIG. 4

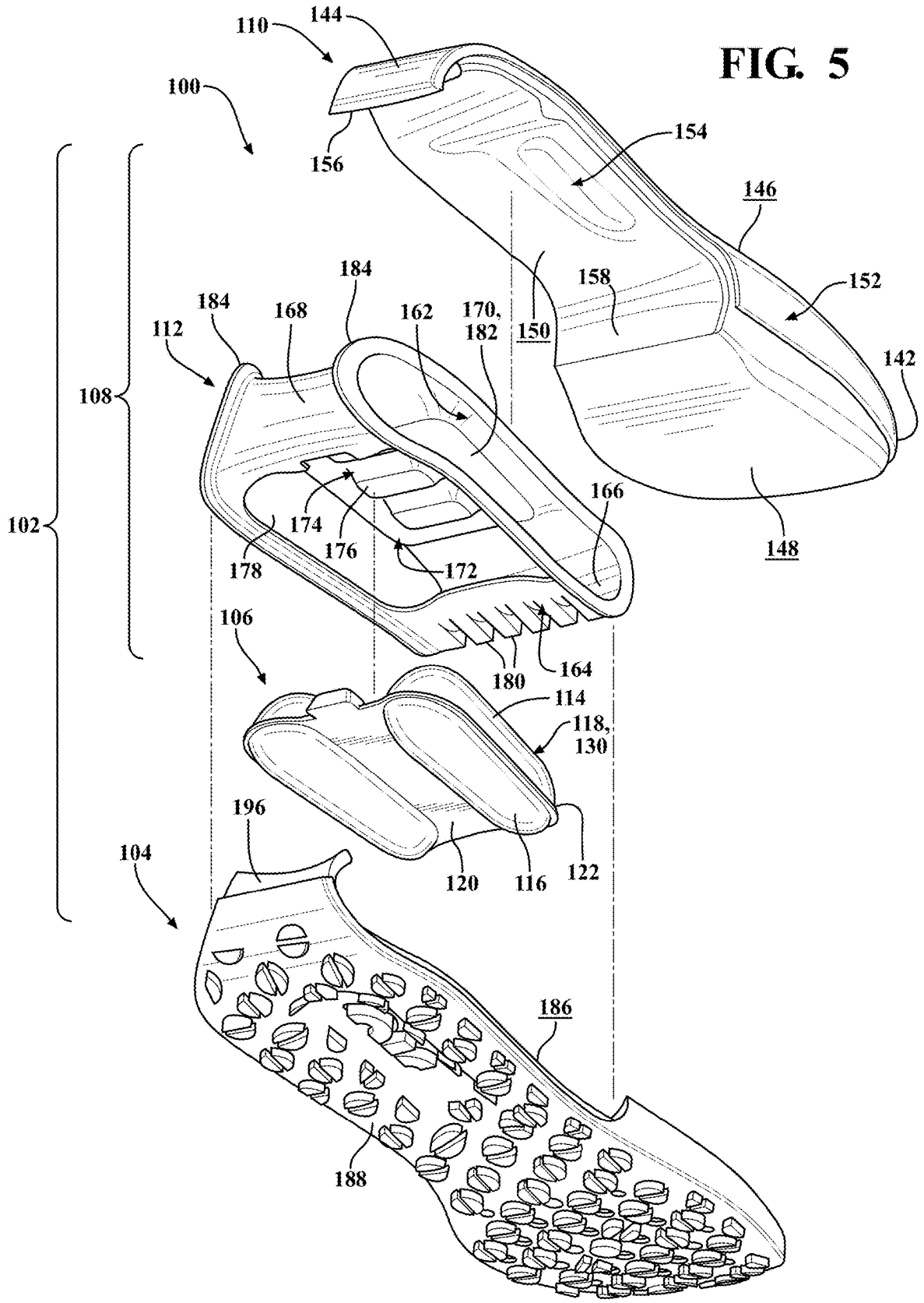
110
144
100
156
154
146
152
158
150
142
148
184
184
168
162
170,
182
112
108
102
174
176
178
172
166
106
180
164
114
118,
130
196
104
120
116
122
186
188

FIG. 5

FIG. 6

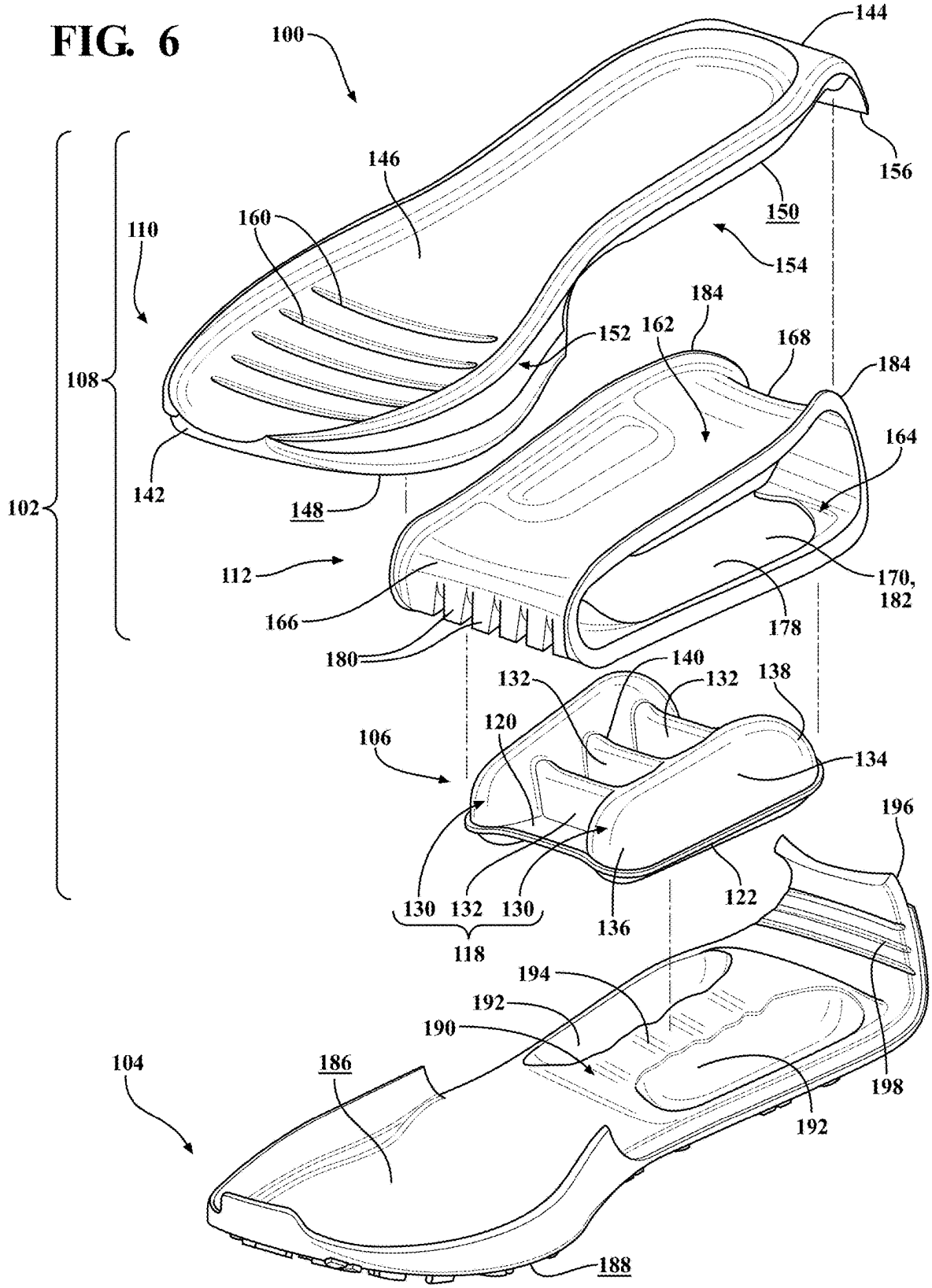
100
144
156
146
150
160
110
154
184
152
162
168
184
108
164
142
148
102
112
170,
182
166
178
180
140
132
132
138
120
106
134
196
130
132
130
122
136
118
194
192
190
104
186
198
192
188

FIG. 7

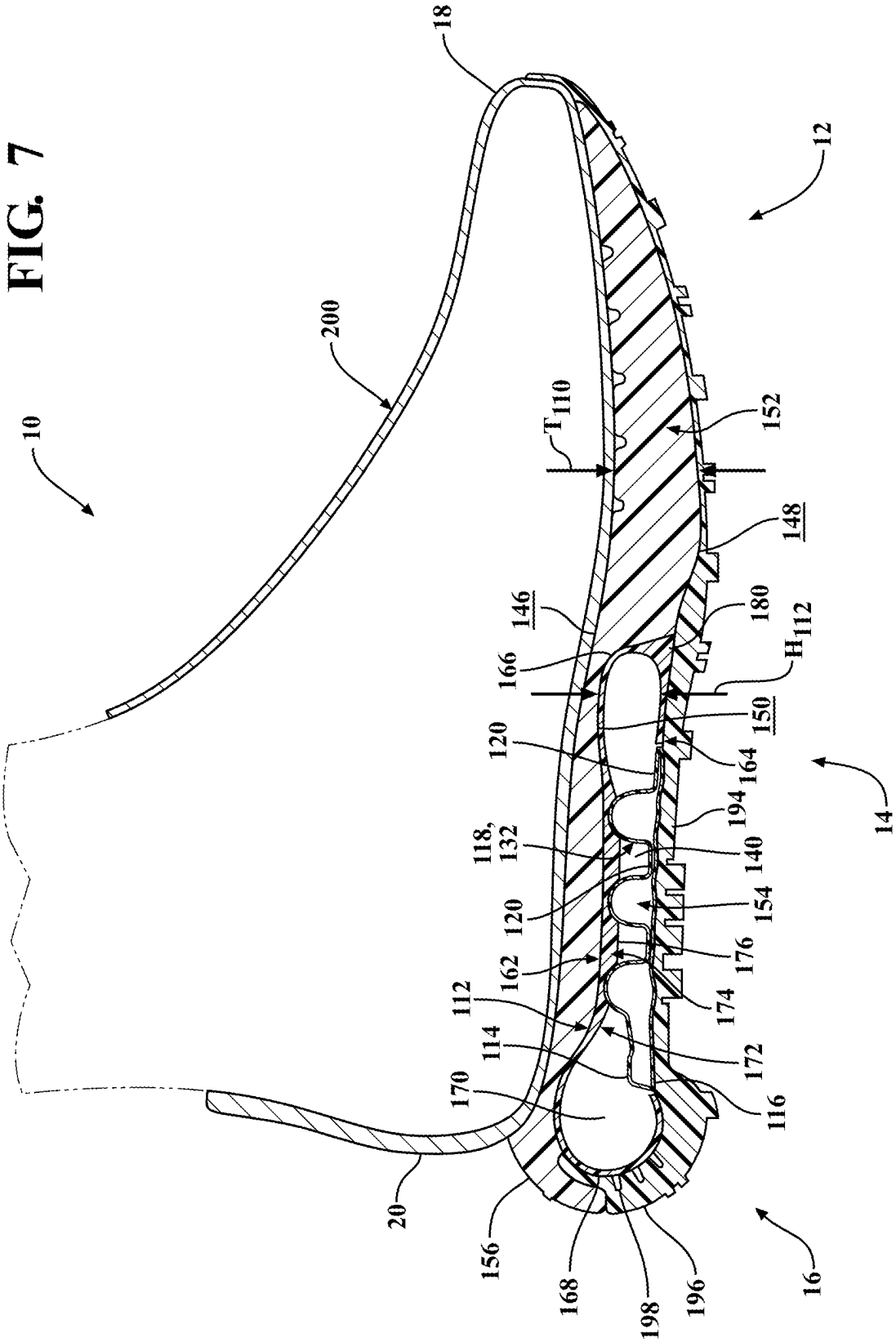
10
12
14
16
18
20
200
T_{110}
152
148
146
180
H_{112}
166
150
120
164
194
118,
132
140
120
154
176
162
174
112
172
114
170
116
156
168
198
196

FIG. 8

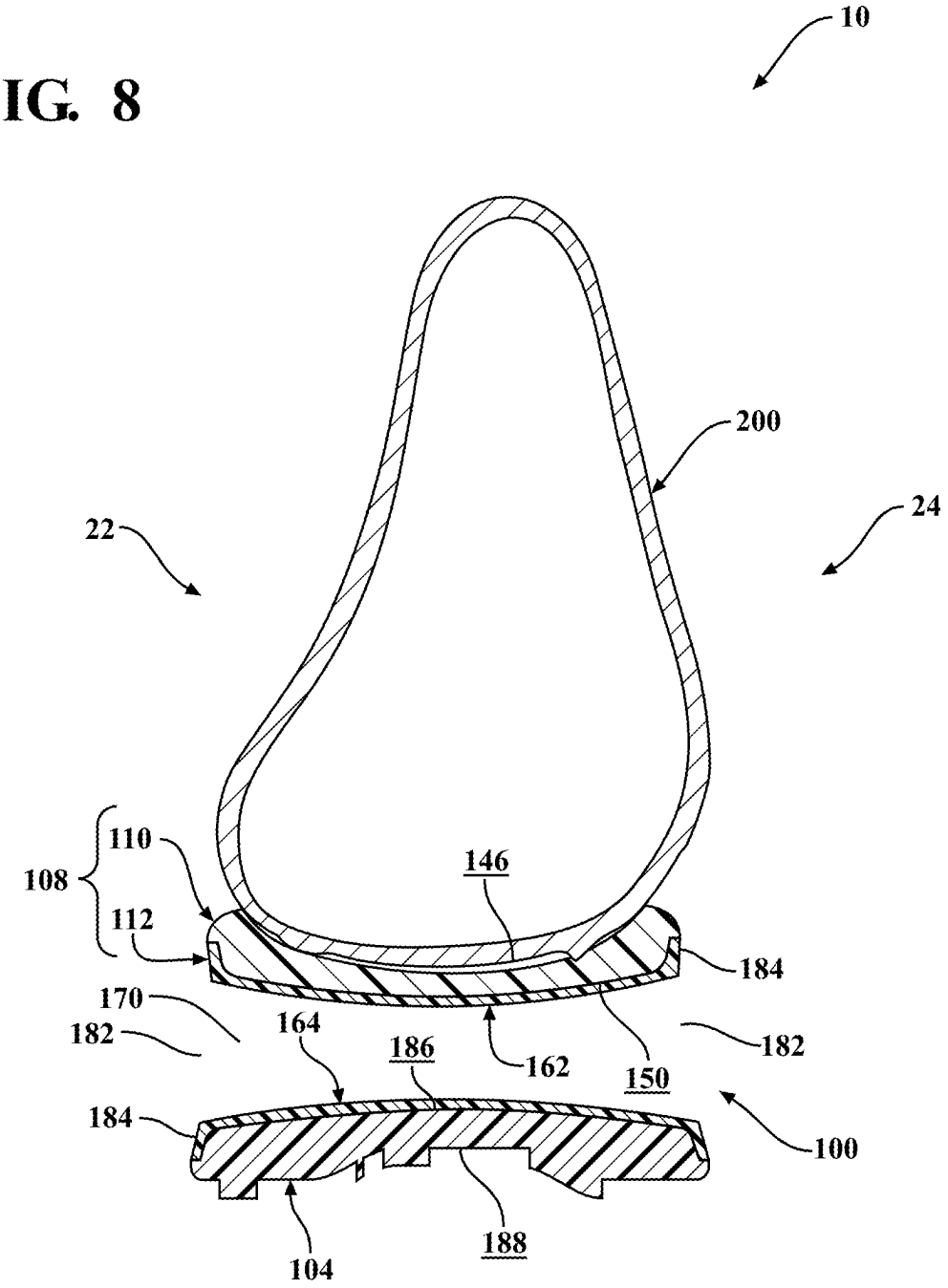
10
200
22
24
108
110
112
146
184
170
182
164
186
162
150
182
184
100
104
188

FIG. 9

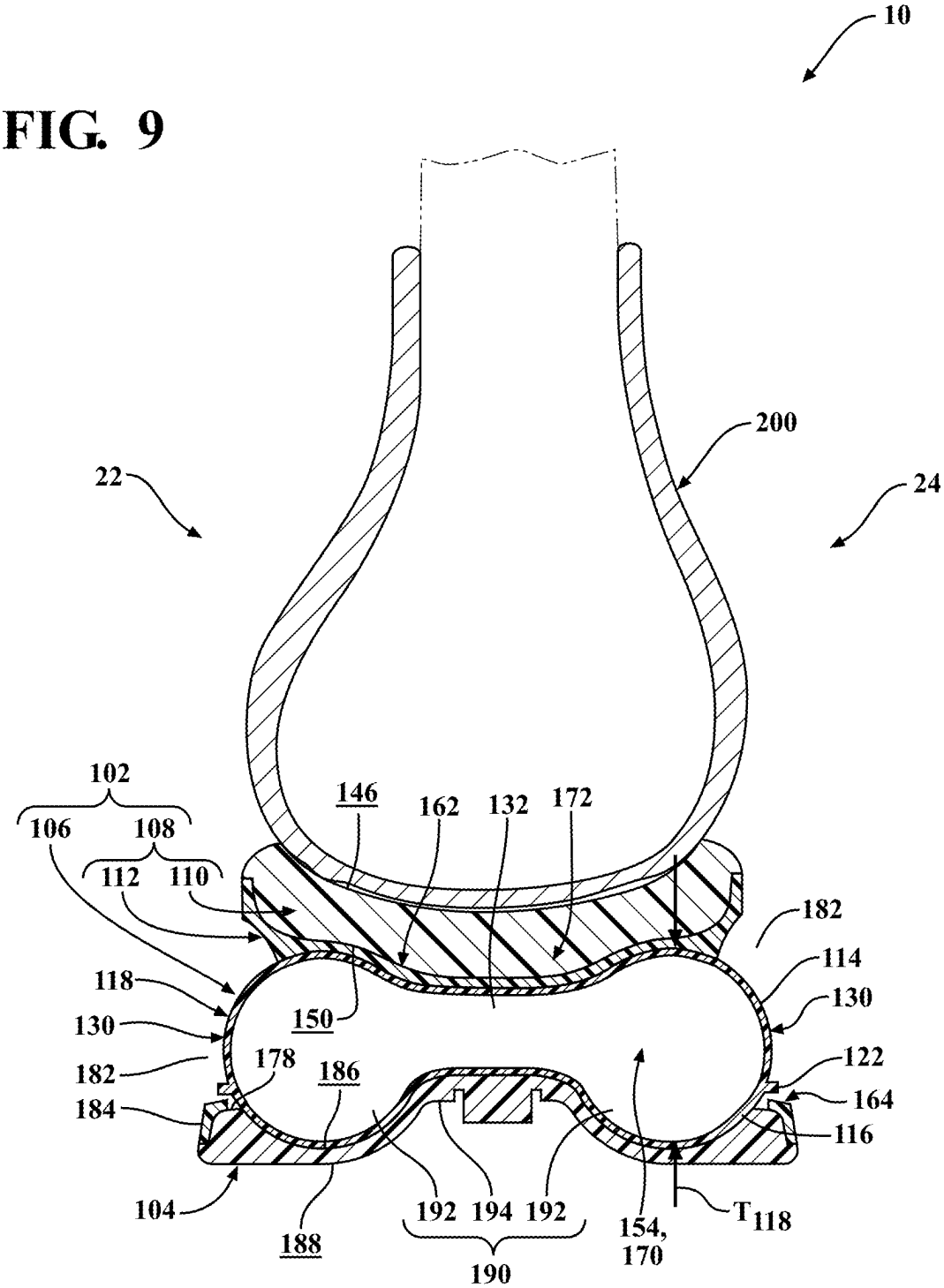
10
200
22
24
102
106
108
112
110
146
162
132
172
182
114
118
130
150
130
122
182
178
186
164
184
116
104
192
194
192
154,
170
T118
188
190

FIG. 10

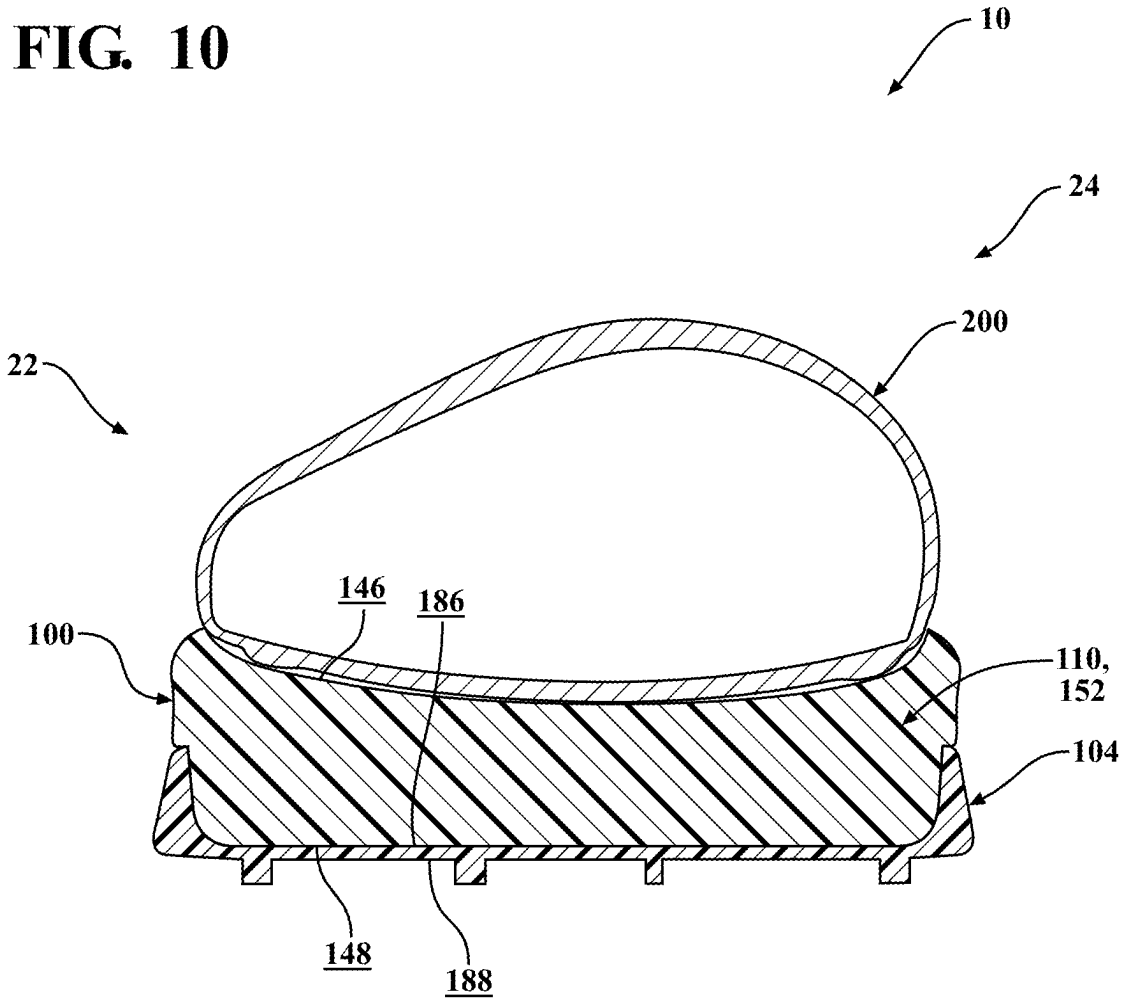

FIG. 11

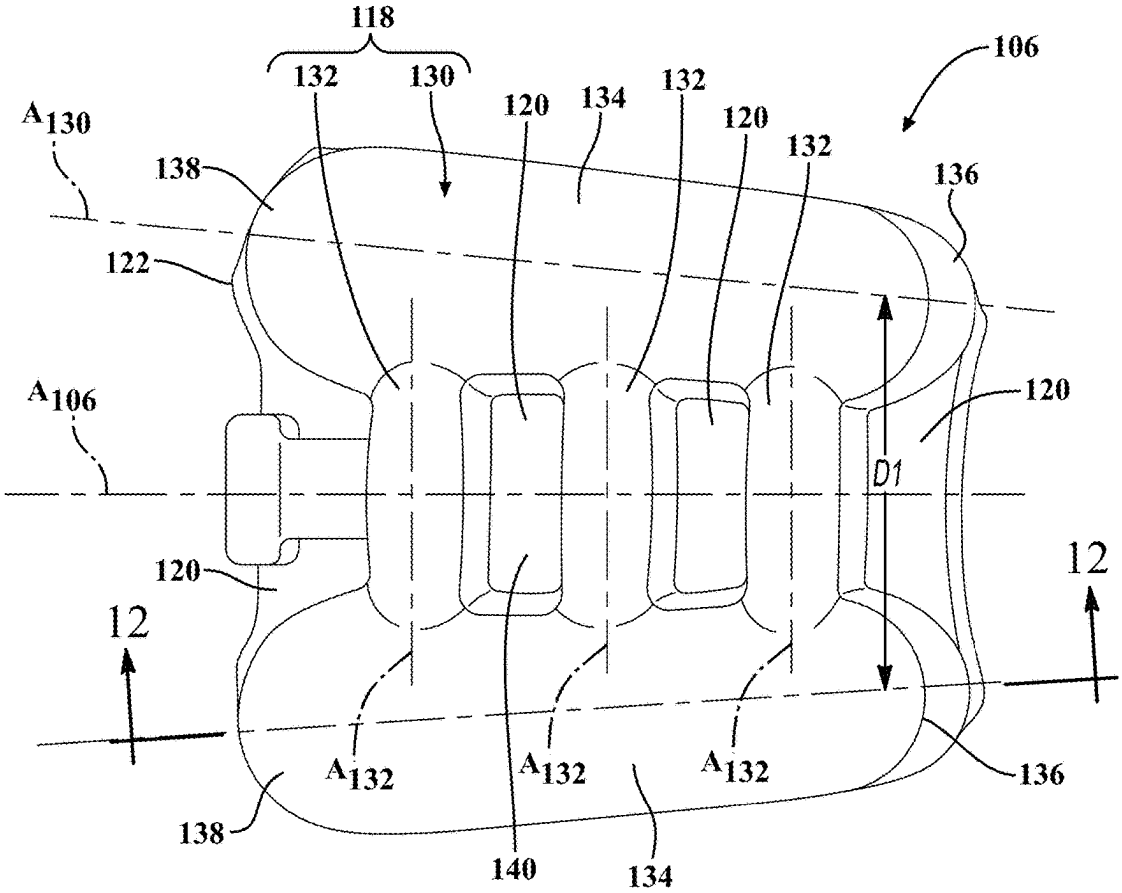
118
132
130
120
134
132
120
132
106
A130
138
136
122
A106
120
D1
120
12
12
A132
A132
A132
136
138
140
134

FIG. 12

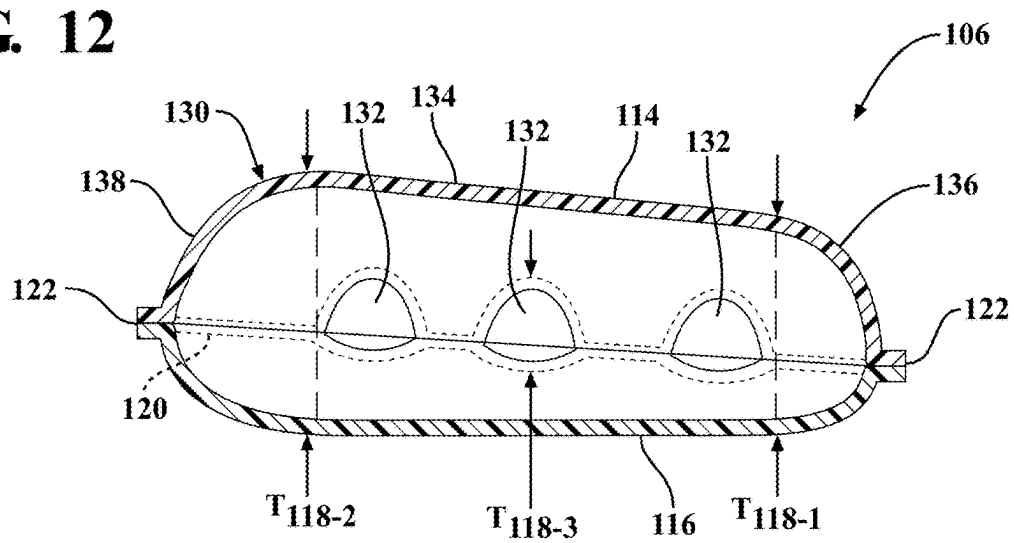
106
130
132
134
132
114
132
138
136
122
122
120
T118-2
T118-3
116
T118-1

SOLE STRUCTURE FOR ARTICLE OF FOOTWEAR

CROSS REFERENCE TO RELATED APPLICATIONS

[0001] This application is a continuation of U.S. application Ser. No. 18/408,398, filed on Jan. 9, 2024, which is a continuation of U.S. application Ser. No. 17/393,271, filed on Aug. 3, 2021, which claims priority under 35 U.S.C. § 119(e) to U.S. Provisional Application No. 63/064,534, filed on Aug. 12, 2020. The disclosures of these prior applications are considered part of the disclosure of this application and are hereby incorporated by reference in their entirety.

FIELD

[0002] The present disclosure relates generally to a sole structure for an article of footwear.

BACKGROUND

[0003] This section provides background information related to the present disclosure, which is not necessarily prior art.

[0004] Articles of footwear conventionally include an upper and a sole structure. The upper may be formed from any suitable material(s) to receive, secure, and support a foot on the sole structure. The upper may cooperate with laces, straps, or other fasteners to adjust the fit of the upper around the foot. A bottom portion of the upper, proximate to a bottom surface of the foot, attaches to the sole structure.

[0005] Sole structures generally include a layered arrangement extending between a ground surface and the upper. One layer of the sole structure includes an outsole that provides abrasion-resistance and traction with the ground surface. The outsole may be formed from rubber or other materials that impart durability and wear-resistance, as well as enhance traction with the ground surface. Another layer of the sole structure includes a midsole disposed between the outsole and the upper. The midsole provides cushioning for the foot and may be partially formed from a polymer foam material that compresses resiliently under an applied load to cushion the foot by attenuating ground-reaction forces. The midsole may incorporate a fluid-filled bladder to provide cushioning to the foot by compressing resiliently under an applied load to attenuate ground-reaction forces. Sole structures may also include a comfort-enhancing insole or a sockliner located within a void proximate to the bottom portion of the upper and a strobel attached to the upper and disposed between the midsole and the insole or sockliner.

[0006] Midsoles employing bladders typically include a bladder formed from two barrier layers of polymer material that are sealed or bonded together. The bladders may contain air, and are designed with an emphasis on balancing support for the foot and cushioning characteristics that relate to responsiveness as the bladder resiliently compresses under an applied load.

DRAWINGS

[0007] The drawings described herein are for illustrative purposes only of selected configurations and are not intended to limit the scope of the present disclosure.

[0008] FIG. **1** is a lateral side perspective view of an article of footwear in accordance with principles of the present disclosure;

[0009] FIG. **2** is a medial side perspective view of the article of footwear of FIG. **1**;

[0010] FIG. **3** is a lateral side elevation view of the article of footwear of FIG. **1**;

[0011] FIG. **4** is a top plan view of the article of footwear of FIG. **1**;

[0012] FIG. **5** is a bottom perspective exploded view of a sole structure of the article of footwear of FIG. **1**;

[0013] FIG. **6** is a top perspective exploded view of the sole structure of FIG. **5**;

[0014] FIG. **7** is a cross-sectional view of the article of footwear of FIG. **1**, taken along Line **7-7** of FIG. **4**;

[0015] FIG. **8** is a cross-sectional view of the article of footwear of FIG. **1**, taken along Line **8-8** of FIG. **3**;

[0016] FIG. **9** is a cross-sectional view of the article of footwear of FIG. **1**, taken along Line **9-9** of FIG. **3**;

[0017] FIG. **10** is a cross-sectional view of the article of footwear of FIG. **1**, taken along Line **10-10** of FIG. **3**;

[0018] FIGS. **11** is a top plan view of a bladder of a sole structure in accordance with principles of the present disclosure; and

[0019] FIG. **12** is a cross-sectional view of the bladder of FIG. **11**, taken along Line **12-12** of FIG. **11**.

[0020] Corresponding reference numerals indicate corresponding parts throughout the drawings.

DETAILED DESCRIPTION

[0021] Example configurations will now be described more fully with reference to the accompanying drawings. Example configurations are provided so that this disclosure will be thorough, and will fully convey the scope of the disclosure to those of ordinary skill in the art. Specific details are set forth such as examples of specific components, devices, and methods, to provide a thorough understanding of configurations of the present disclosure. It will be apparent to those of ordinary skill in the art that specific details need not be employed, that example configurations may be embodied in many different forms, and that the specific details and the example configurations should not be construed to limit the scope of the disclosure.

[0022] The terminology used herein is for the purpose of describing particular exemplary configurations only and is not intended to be limiting. As used herein, the singular articles "a," "an," and "the" may be intended to include the plural forms as well, unless the context clearly indicates otherwise. The terms "comprises," "comprising," "including," and "having," are inclusive and therefore specify the presence of features, steps, operations, elements, and/or components, but do not preclude the presence or addition of one or more other features, steps, operations, elements, components, and/or groups thereof. The method steps, processes, and operations described herein are not to be construed as necessarily requiring their performance in the particular order discussed or illustrated, unless specifically identified as an order of performance. Additional or alternative steps may be employed.

[0023] When an element or layer is referred to as being "on," "engaged to," "connected to," "attached to," or "coupled to" another element or layer, it may be directly on, engaged, connected, attached, or coupled to the other element or layer, or intervening elements or layers may be present. In contrast, when an element is referred to as being "directly on," "directly engaged to," "directly connected to," "directly attached to," or "directly coupled to" another

element or layer, there may be no intervening elements or layers present. Other words used to describe the relationship between elements should be interpreted in a like fashion (e.g., "between" versus "directly between," "adjacent" versus "directly adjacent," etc.). As used herein, the term "and/or" includes any and all combinations of one or more of the associated listed items.

[0024] The terms first, second, third, etc. may be used herein to describe various elements, components, regions, layers and/or sections. These elements, components, regions, layers and/or sections should not be limited by these terms. These terms may be only used to distinguish one element, component, region, layer or section from another region, layer or section. Terms such as "first," "second," and other numerical terms do not imply a sequence or order unless clearly indicated by the context. Thus, a first element, component, region, layer or section discussed below could be termed a second element, component, region, layer or section without departing from the teachings of the example configurations.

[0025] In one configuration, a sole structure for an article of footwear is provided and comprises a cushioning element including a first material and a cradle including a second material. The cradle is attached to the cushioning element and includes a first plate disposed against the cushioning element and a second plate spaced apart from the cushioning element, the second plate including an aperture. The sole structure additionally includes a bladder disposed within the cradle and including a first portion contacting the first plate and a second portion extending through the aperture of the second plate.

[0026] The sole structure may include one or more of the following optional features. For example, an outsole may be disposed adjacent to the second plate on an opposite side of the cradle from the cushioning element. In this configuration, the second portion of the bladder may contact the outsole. Additionally or alternatively, the second plate may surround the second portion of the bladder.

[0027] In one configuration, the first plate and the second plate may partially define a receptacle extending continuously through the cradle from a first side to a second side. The cradle may include an arcuate first end support connecting the first plate and the second plate at a first end of the cradle. The first end support may be spaced apart from the bladder. Additionally or alternatively, the cradle may include an arcuate second end support connecting the first plate and the second plate at a second end of the cradle. The first end support and the second end support may be spaced apart from the bladder. The first end support may be a different size than the second end support.

[0028] In another configuration, a sole structure for an article of footwear is provided and comprises a cushioning element, a cradle received by the cushioning element and defining a receptacle extending continuously through the cradle from a first side of the sole structure to a second side of the sole structure, and a bladder including a first portion disposed within the receptacle and a second portion extending through the cradle.

[0029] The sole structure may include one or more of the following optional features. In one configuration, an outsole may be disposed on an opposite side of the cradle from the cushioning element. In this configuration, the second portion of the bladder may contact the outsole through the cradle.

[0030] In one configuration, the cradle may include a first plate surrounding the second portion of the bladder. A second plate may be spaced apart from the first plate. In this configuration, the first portion of the bladder may contact the second plate.

[0031] The cradle may include an arcuate first end support connecting the first plate and the second plate at a first end of the cradle. The first end support may be spaced apart from the bladder. Additionally or alternatively, the cradle may include an arcuate second end support connecting the first plate and the second plate at a second end of the cradle. The first end support and the second end support may be spaced apart from the bladder. The first end support may be a different size than the second end support.

[0032] Referring to FIGS. **1-10**, an article of footwear **10** is provided, which includes a sole structure **100** and an upper **200** attached to the sole structure **100**. The article of footwear **10** may be divided into one or more regions. The regions may include a forefoot region **12**, a mid-foot region **14**, and a heel region **16**. The forefoot region **12** corresponds to the phalanges and the metatarsophalangeal joint (i.e., "the ball") of the foot. The mid-foot region **14** may correspond with an arch area of the foot, and the heel region **16** may correspond with rear portions of the foot, including a calcaneus bone. The footwear **10** may further include an anterior end **18** associated with a forward-most point of the forefoot region **12**, and a posterior end **20** corresponding to a rearward-most point of the heel region **16**. A longitudinal axis A_{10} of the footwear **10** extends along a length of the footwear **10** from the anterior end **18** to the posterior end **20**, and generally divides the footwear **10** into a lateral side **22** and a medial side **24**, as shown in FIG. **5**. Accordingly, the lateral side **22** and the medial side **24** respectively correspond with opposite sides of the footwear **10** and extend through the regions **12**, **14**, **16**.

[0033] With reference to FIGS. **1-3**, the sole structure **100** includes a midsole **102** configured to provide cushioning characteristics to the sole structure **100**, and an outsole **104** configured to provide a ground-engaging surface of the article of footwear **10**. Unlike conventional sole structures, the midsole **102** of the sole structure **100** may be formed compositely and include a plurality of subcomponents for providing desired forms of cushioning and support throughout the sole structure **100**. For example, the midsole **102** may be described as including a bladder **106** and a chassis **108**, where the chassis **108** is configured to be attached to the upper **200** and provides an interface between the upper **200**, the bladder **106**, and the outsole **104**.

[0034] Generally, the bladder **106** of the sole structure **100** is supported within the heel region **16** of the chassis **108** and is configured to attenuate forces associated with impacts in the heel region **16**. The bladder **106** of the midsole **102** includes an opposing pair of barrier layers **114**, **116**, which are joined to each other at discrete locations to define a chamber **118**, a web area **120**, and a peripheral seam **122**. In the illustrated embodiment, the barrier layers **114**, **116** include a first, upper barrier layer **114** and a second, lower barrier layer **116**. Alternatively, the chamber **118** can be produced from any suitable combination of one or more barrier layers, as described in greater detail below.

[0035] In some implementations, the upper barrier layer **114** and the lower barrier layer **116** cooperate to define a geometry (e.g., thicknesses, width, and lengths) of the chamber **118**. For example, the web area **120** and the

peripheral seam **122** may cooperate to bound and extend around the chamber **118** to seal the fluid (e.g., air) within the chamber **118**. Thus, the chamber **118** is associated with an area of the bladder **106** where interior surfaces of the upper and lower barrier layers **114**, **116** are not joined together and, thus, are separated from one another.

[0036] As shown in FIGS. **7** and **9**, a space formed between opposing interior surfaces of the upper and lower barrier layers **114**, **116** defines an interior void of the chamber **118**. Similarly, exterior surfaces of the upper and lower barrier layers **114**, **116** define an exterior profile of the chamber **118**. Thicknesses T_{118} of the chamber **118** are defined by the distance between the upper and lower barrier layers **114**, **116** of the bladder **106**.

[0037] As best shown in FIG. **11**, the chamber **118** includes a plurality of segments **130**, **132** that cooperate to provide characteristics of responsiveness and support to the midsole **102**. Particularly, the segments **130**, **132** may be described as including a pair of cushions **130** on opposite sides of the bladder **106**, which are connected (i.e., in fluid communication) with each other by one or more conduits **132**. When assembled to in the sole structure **100**, the cushions **130** of the chamber **118** are configured to be at least partially exposed along a peripheral edge of the sole structure **100**.

[0038] Referring to FIG. **7**, each of the cushions **130** includes tubular body **134**, a first terminal end **136** disposed at a first end of the tubular body **134**, and a second terminal end **138** disposed at an opposite end of the tubular body **134** from the first terminal end **136**. The tubular body **134** defines a substantially circular cross section that extends along a longitudinal axis A_{130} of the cushion **130**. As shown, the thickness T_{118} of the chamber **118** increases continuously along the longitudinal axis A_{130} from a first thickness $T_{118\text{-}1}$ at the first terminal end **136** to a second thickness $T_{118\text{-}2}$ at the second terminal end **138**. Thus, the thickness of the chamber **118** may be described as tapering along the direction from the second terminal end **138** to the first terminal end **136**.

[0039] As shown in FIG. **12**, the first terminal end **136** and the second terminal end **138** of each cushion **130** are substantially dome-shaped, and each includes compound curvatures associated with the respective upper and lower barrier layers **114**, **116**. For example, the first terminal end **136** of each cushion **130** is formed where an end portion of the upper barrier layer **114** converges with and is joined to the lower barrier layer **116** at the peripheral seam **122** to enclose an anterior end of the tubular body **134**. Referring still to FIG. **12**, the second terminal end **138** of each cushion **130** is formed where another end portion of the upper barrier layer **114** converges with and is joined to the lower barrier layer **116** at the peripheral seam **122** to enclose the opposite end of the tubular body **134**.

[0040] As provided above, each of the cushions **130** defines a respective longitudinal axis A_{130} that extends from the first terminal end **136** to the second terminal end **138**. As best shown in FIG. **11**, the cushions **130** are spaced apart from each other along a direction transverse to the longitudinal axes A_{106} of the bladder **106**. Accordingly, when the bladder **106** is assembled within the sole structure **100**, the cushions **130** are spaced apart from each other along a lateral direction of the article of footwear **10** such that a first one of the cushions **130** extends along the lateral side **22** and a second one of the cushions **130** extends along the medial side **24**. Furthermore, the longitudinal axes A_{130} of the cushions **130** converge with each other and with the longitudinal axis A_{10} of the article of footwear **10** along the direction from the posterior end **20** to the anterior end **18**. Accordingly, a lateral distance D**1** between the cushions **130** is greater at the second terminal ends **138** than at the first terminal ends **136**.

[0041] With continued reference to FIGS. **11** and **12**, the chamber **118** further includes at least one conduit **132** extending between and fluidly coupling the cushions **130**. In the illustrated example, the chamber **118** includes a plurality of the conduits **132** connecting the tubular bodies **134** of the cushions **130** to each other. The conduits **132** each extend along respective longitudinal axes A_{132} that are transverse to the longitudinal axes A_{130} of the cushions **130**. As best shown in FIGS. **11** and **12**, the conduits **132** include a first conduit **132** extending between the tubular bodies **134** of the cushions **130** adjacent to the first terminal ends **136**, a second conduit **132** extending between the tubular bodies **134** of the cushions **130** adjacent to the second terminal ends **138**, and a third conduit **132** disposed between the first conduit **132** and the second conduit **132** and connecting intermediate portions of the tubular bodies **134**. Accordingly, the first conduit **132** and the second conduit **132** are disposed on opposite sides of the third conduit **132**.

[0042] As best shown in FIGS. **9** and **12**, the conduits **132** are defined by the cooperation of the upper barrier layer **114** and the lower barrier layer **116**. As shown in FIG. **12**, the upper barrier layer **114** and the lower barrier layer **116** are formed to provide a plurality of semi-cylindrically shaped conduits **132**, each having a substantially similar third thickness $T_{118\text{-}3}$ that is less than the first thickness $T_{118\text{-}1}$ and the second thickness $T_{118\text{-}2}$ of the cushions **130**. A profile of each of the conduits **132** is substantially defined by the upper barrier layer **114**, whereby the upper barrier layer **114** is molded to define a curved upper portion of each conduit **132** while the lower barrier layer **116** is provided as substantially flat lower portion of each of the conduits **132**. Although the lower barrier layer **114** is initially provided in a substantially flat state, the lower barrier layer **116** may bulge from the web area **120** when the chamber **118** is pressurized and the lower barrier layer **116** is biased apart from the upper barrier layer **114**, as illustrated in FIG. **7**.

[0043] With reference to FIGS. **7** and **11**, the web area **120** is formed at a bonded region of the upper barrier layer **114** and the lower barrier layer **116**, and extends between and connects each of the segments **130**, **132** of the chamber **118**. Particularly, the web area **120** includes an anterior portion extending between and connecting the first terminal ends **136** of the respective cushions **130**, and defining a first terminal edge at an anterior end of the bladder **106**. A posterior portion of the web area **120** extends between and connects the second terminal ends **138** of the cushions **130**, and forms a second terminal edge at a posterior end of the bladder **106**. Intermediate portions of the web area **120** extend between and connect adjacent ones of the conduits **132** and the cushions **130**. Accordingly, the intermediate portions of the web area **120** may be completely surrounded by the chamber **118**. In the illustrated example, the web area **120** is disposed vertically intermediate with respect to the overall thickness T_{118} of the fluid-filled chamber **118**.

[0044] In the illustrated example, the web area **120** and the cushions **130** of the chamber **118** cooperate to define an upper pocket **140** on a first side of the bladder **106** associated

with the upper barrier layer **114**. Here, the conduits **132** may be disposed within the upper pocket **140** to form an alternating series of bulges and recesses along a length of the upper pocket **140**. As described in greater detail below, the chassis **108** may include one or more features configured to mate with the upper pocket **140** when the sole structure **100** is assembled. For instance, the chassis **108** may include indentations and protrusions configured to engage the bulges and recesses formed by the conduits **132** of the bladder **106**.

[0045] As used herein, the term "barrier layer" (e.g., barrier layers **114**, **116**) encompasses both monolayer and multilayer films. In some embodiments, one or both of barrier layers **114**, **116** are each produced (e.g., thermoformed or blow molded) from a monolayer film (a single layer). In other embodiments, one or both of barrier layers **114**, **116** are each produced (e.g., thermoformed or blow molded) from a multilayer film (multiple sublayers). In either aspect, each layer or sublayer can have a film thickness ranging from about 0.2 micrometers to about be about 1 millimeter. In further embodiments, the film thickness for each layer or sublayer can range from about 0.5 micrometers to about 500 micrometers. In yet further embodiments, the film thickness for each layer or sublayer can range from about 1 micrometer to about 100 micrometers.

[0046] One or both of barrier layers **114**, **116** can independently be transparent, translucent, and/or opaque. For example, the upper barrier layer **114** may be transparent, while the lower barrier layer **116** is opaque. As used herein, the term "transparent" for a barrier layer and/or a fluid-filled chamber means that light passes through the barrier layer in substantially straight lines and a viewer can see through the barrier layer. In comparison, for an opaque barrier layer, light does not pass through the barrier layer and one cannot see clearly through the barrier layer at all. A translucent barrier layer falls between a transparent barrier layer and an opaque barrier layer, in that light passes through a translucent layer but some of the light is scattered so that a viewer cannot see clearly through the layer.

[0047] Barrier layers **114**, **116** can each be produced from an elastomeric material that includes one or more thermoplastic polymers and/or one or more cross-linkable polymers. In an aspect, the elastomeric material can include one or more thermoplastic elastomeric materials, such as one or more thermoplastic polyurethane (TPU) copolymers, one or more ethylene-vinyl alcohol (EVOH) copolymers, and the like.

[0048] As used herein, "polyurethane" refers to a copolymer (including oligomers) that contains a urethane group (—N(C═O)O—). These polyurethanes can contain additional groups such as ester, ether, urea, allophanate, biuret, carbodiimide, oxazolidinyl, isocynaurate, uretdione, carbonate, and the like, in addition to urethane groups. In an aspect, one or more of the polyurethanes can be produced by polymerizing one or more isocyanates with one or more polyols to produce copolymer chains having (—N(C═O)O—) linkages.

[0049] Examples of suitable isocyanates for producing the polyurethane copolymer chains include diisocyanates, such as aromatic diisocyanates, aliphatic diisocyanates, and combinations thereof. Examples of suitable aromatic diisocyanates include toluene diisocyanate (TDI), TDI adducts with trimethyloylpropane (TMP), methylene diphenyl diisocyanate (MDI), xylene diisocyanate (XDI), tetramethylxylylene diisocyanate (TMXDI), hydrogenated xylene diisocyanate (HXDI), naphthalene 1,5-diisocyanate (NDI), 1,5-tetrahydronaphthalene diisocyanate, para-phenylene diisocyanate (PPDI), 3,3'-dimethyldipheny 1-4, 4'-diisocyanate (DDDI), 4,4'-dibenzyl diisocyanate (DBDI), 4-chloro-1,3-phenylene diisocyanate, and combinations thereof. In some embodiments, the copolymer chains are substantially free of aromatic groups.

[0050] In particular aspects, the polyurethane polymer chains are produced from diisocynates including HMDI, TDI, MDI, H12 aliphatics, and combinations thereof. In an aspect, the thermoplastic TPU can include polyester-based TPU, polyether-based TPU, polycaprolactone-based TPU, polycarbonate-based TPU, polysiloxane-based TPU, or combinations thereof.

[0051] In another aspect, the polymeric layer can be formed of one or more of the following: EVOH copolymers, poly (vinyl chloride), polyvinylidene polymers and copolymers (e.g., polyvinylidene chloride), polyamides (e.g., amorphous polyamides), amide-based copolymers, acrylonitrile polymers (e.g., acrylonitrile-methyl acrylate copolymers), polyethylene terephthalate, polyether imides, polyacrylic imides, and other polymeric materials known to have relatively low gas transmission rates. Blends of these materials as well as with the TPU copolymers described herein and optionally including combinations of polyimides and crystalline polymers, are also suitable.

[0052] The barrier layers **114**, **116** may include two or more sublayers (multilayer film) such as shown in Mitchell et al., U.S. Pat. No. 5,713,141 and Mitchell et al., U.S. Pat. No. 5,952,065, the disclosures of which are incorporated by reference in their entirety. In embodiments where the barrier layers **114**, **116** include two or more sublayers, examples of suitable multilayer films include microlayer films, such as those disclosed in Bonk et al., U.S. Pat. No. 6,582,786, which is incorporated by reference in its entirety. In further embodiments, barrier layers **114**, **116** may each independently include alternating sublayers of one or more TPU copolymer materials and one or more EVOH copolymer materials, where the total number of sublayers in each of barrier layers **114**, **116** includes at least four (4) sublayers, at least ten (10) sublayers, at least twenty (20) sublayers, at least forty (40) sublayers, and/or at least sixty (60) sublayers.

[0053] The chamber **118** can be produced from the barrier layers **114**, **116** using any suitable technique, such as thermoforming (e.g. vacuum thermoforming), blow molding, extrusion, injection molding, vacuum molding, rotary molding, transfer molding, pressure forming, heat sealing, casting, low-pressure casting, spin casting, reaction injection molding, radio frequency (RF) welding, and the like. In an aspect, barrier layers **114**, **116** can be produced by co-extrusion followed by vacuum thermoforming to produce an inflatable chamber **118**, which can optionally include one or more valves (e.g., one way valves) that allows the chamber **118** to be filled with the fluid (e.g., gas).

[0054] The chamber **118** can be provided in a fluid-filled (e.g., as provided in footwear **10**) or in an unfilled state. The chamber **118** can be filled to include any suitable fluid, such as a gas or liquid. In an aspect, the gas can include air, nitrogen (N_2), or any other suitable gas. In other aspects, the chamber **118** can alternatively include other media, such as pellets, beads, ground recycled material, and the like (e.g., foamed beads and/or rubber beads). The fluid provided to the chamber **118** can result in the chamber **118** being

pressurized. Alternatively, the fluid provided to the chamber **118** can be at atmospheric pressure such that the chamber **118** is not pressurized but, rather, simply contains a volume of fluid at atmospheric pressure.

[0055] The chamber **118** desirably has a low gas transmission rate to preserve its retained gas pressure. In some embodiments, the chamber **118** has a gas transmission rate for nitrogen gas that is at least about ten (10) times lower than a nitrogen gas transmission rate for a butyl rubber layer of substantially the same dimensions. In an aspect, the chamber **118** has a nitrogen gas transmission rate of 15 cubic-centimeter/square-meter·atmosphere·day ($cm^3/m^2 \cdot atm \cdot day$) or less for an average film thickness of 500 micrometers (based on thicknesses of barrier layers **114**, **116**). In further aspects, the transmission rate is 10 $cm^3/m^2 \cdot atm \cdot day$ or less, 5 $cm^3/m^2.atm \cdot day$ or less, or 1 $cm^3/m^2 \cdot atm \cdot day$ or less.

[0056] In some implementations, the upper and lower barrier layers **114**, **116** are formed by respective mold portions each defining various surfaces for forming depressions and pinched surfaces corresponding to locations where the web area **120** and/or the peripheral seam **122** are formed when the upper barrier layer **114** and the lower barrier layer **116** are joined and bonded together. In some implementations, adhesive bonding joins the upper barrier layer **114** and the lower barrier layer **116** to form the web area **120** and the peripheral seam **122**. In other implementations, the upper barrier layer **114** and the lower barrier layer **116** are joined to form the web area **120** and the peripheral seam **122** by thermal bonding. In some examples, one or both of the barrier layers **114**, **116** are heated to a temperature that facilitates shaping and melding. In some examples, the barrier layers **114**, **116** are heated prior to being located between their respective molds. In other examples, the mold may be heated to raise the temperature of the barrier layers **114**, **116**. In some implementations, a molding process used to form the fluid-filled chamber **118** incorporates vacuum ports within mold portions to remove air such that the upper and lower barrier layers **114**, **116** are drawn into contact with respective mold portions. In other implementations, fluids such as air may be injected into areas between the upper and lower barrier layers **114**, **116** such that pressure increases cause the barrier layers **114**, **116** to engage with surfaces of their respective mold portions.

[0057] In the illustrated example, the chassis **108** extends continuously from the anterior end **18** to the posterior end **20**, and is configured to receive and support the bladder **106** therein. As shown, the chassis **108** is formed as a composite structure including a cushioning element **110** and a cradle **112** received at least partially within the cushioning element **110**. As discussed below, the cradle **112** is configured to receive and support the bladder **106** within the heel region **16** of the cushioning element **110**. While the cushioning element **110** and the cradle **112** of the illustrated example are shown as separate components that cooperate to form the chassis **108**, in some examples the chassis **108** may be formed as a unitary body.

[0058] The cushioning element **110** is formed of a first material, and extends continuously from a first end **142** at the anterior end **18** of the sole structure **100** to a second end **144** at the posterior end **20** of the sole structure **100**. The cushioning element **110** includes a top surface **146** extending continuously from the first end **142** to the second end **144**, which defines a footbed of the chassis **108**. The cushioning element **110** further includes a bottom surface **148** formed on an opposite side of the cushioning element **110** from the top surface **146**. A distance from the top surface **146** to the bottom surface **148** defines an overall thickness T_{110} (FIG. **7**) of the cushioning element **110**. As best shown in FIGS. **5** and **6**, the cushioning element **110** further includes a recessed surface **150** offset from the bottom surface **148** towards the top surface **146**.

[0059] As shown, the aforementioned surfaces **146**, **148**, **150** of the cushioning element **110** cooperate to define a support member **152** in the forefoot region **12** and a recess **154** in the heel region **16**. In the illustrated example, the cushioning element **110** further includes an upper posterior lip **156** depending from the recessed surface **150** at the second end **144** of the cushioning element **110**, which cooperates with a corresponding portion of the outsole **104** to enclose the cradle **112** at the posterior end **20** of the sole structure **100**, as described in greater detail below.

[0060] The support member **152** of the cushioning element **110** is formed between the top surface **146** and the bottom surface **148**, and extends continuously from the first end **142** of the cushioning element **110** to an end wall **158** in the mid-foot region **14**. Accordingly, the support member **152** provides cushioning and support characteristics of the chassis **108** in the forefoot region, beneath the phalanges and the ball of the foot. Optionally, the support member **152** may include one or more flexions **160** to improve flexibility of the support member **152**. In the illustrated example, the flexions **160** are embodied as a series grooves **160** formed in the top surface **146**, where each of the grooves **160** extends across the forefoot region **12** in a direction from the lateral side **22** to the medial side **24**.

[0061] With continued reference to FIG. **5**, the recess **154** is defined, in part, by the recessed surface **150**. In the illustrated example, the recess **154** is bounded on opposite ends by the end wall **158** in the mid-foot region **14** and by the lip **156** at the posterior end **20** of the sole structure **100**. Accordingly, the recess **154** extends from the mid-foot region **14** to the posterior end **20**. A depth of the recess **154**, defined by the offset distance from the bottom surface **148** to the recessed surface **150**, corresponds to a height of the cradle **112**. Accordingly, when the cradle **112** is received within the recess **154** the bottom portion of the cradle **112** is flush with the bottom surface **148** of the cushioning element **110** to provide a continuous support surface along the bottom of the chassis **108**.

[0062] As described above, the cushioning element **110** is formed of a resilient polymeric material, such as foam or rubber, to impart properties of cushioning, responsiveness, and energy distribution to the foot of the wearer. Example resilient polymeric materials for the cushioning element **110** may include those based on foaming or molding one or more polymers, such as one or more elastomers (e.g., thermoplastic elastomers (TPE)). The one or more polymers may include aliphatic polymers, aromatic polymers, or mixtures of both; and may include homopolymers, copolymers (including terpolymers), or mixtures of both.

[0063] In some aspects, the one or more polymers may include olefinic homopolymers, olefinic copolymers, or blends thereof. Examples of olefinic polymers include polyethylene, polypropylene, and combinations thereof. In other aspects, the one or more polymers may include one or more ethylene copolymers, such as, ethylene-vinyl acetate (EVA) copolymers, EVOH copolymers, ethylene-ethyl acrylate

copolymers, ethylene-unsaturated mono-fatty acid copolymers, and combinations thereof.

[0064] In further aspects, the one or more polymers may include one or more polyacrylates, such as polyacrylic acid, esters of polyacrylic acid, polyacrylonitrile, polyacrylic acetate, polymethyl acrylate, polyethyl acrylate, polybutyl acrylate, polymethyl methacrylate, and polyvinyl acetate; including derivatives thereof, copolymers thereof, and any combinations thereof.

[0065] In yet further aspects, the one or more polymers may include one or more ionomeric polymers. In these aspects, the ionomeric polymers may include polymers with carboxylic acid functional groups, sulfonic acid functional groups, salts thereof (e.g., sodium, magnesium, potassium, etc.), and/or anhydrides thereof. For instance, the ionomeric polymer(s) may include one or more fatty acid-modified ionomeric polymers, polystyrene sulfonate, ethylene-methacrylic acid copolymers, and combinations thereof.

[0066] In further aspects, the one or more polymers may include one or more styrenic block copolymers, such as acrylonitrile butadiene styrene block copolymers, styrene acrylonitrile block copolymers, styrene ethylene butylene styrene block copolymers, styrene ethylene butadiene styrene block copolymers, styrene ethylene propylene styrene block copolymers, styrene butadiene styrene block copolymers, and combinations thereof.

[0067] In further aspects, the one or more polymers may include one or more polyamide copolymers (e.g., polyamide-polyether copolymers) and/or one or more polyurethanes (e.g., cross-linked polyurethanes and/or thermoplastic polyurethanes). Alternatively, the one or more polymers may include one or more natural and/or synthetic rubbers, such as butadiene and isoprene.

[0068] When the resilient polymeric material is a foamed polymeric material, the foamed material may be foamed using a physical blowing agent which phase transitions to a gas based on a change in temperature and/or pressure, or a chemical blowing agent which forms a gas when heated above its activation temperature. For example, the chemical blowing agent may be an azo compound such as azodicarbonamide, sodium bicarbonate, and/or an isocyanate.

[0069] In some embodiments, the foamed polymeric material may be a crosslinked foamed material. In these embodiments, a peroxide-based crosslinking agent such as dicumyl peroxide may be used. Furthermore, the foamed polymeric material may include one or more fillers such as pigments, modified or natural clays, modified or unmodified synthetic clays, talc glass fiber, powdered glass, modified or natural silica, calcium carbonate, mica, paper, wood chips, and the like.

[0070] The resilient polymeric material may be formed using a molding process. In one example, when the resilient polymeric material is a molded elastomer, the uncured elastomer (e.g., rubber) may be mixed in a Banbury mixer with an optional filler and a curing package such as a sulfur-based or peroxide-based curing package, calendared, formed into shape, placed in a mold, and vulcanized.

[0071] In another example, when the resilient polymeric material is a foamed material, the material may be foamed during a molding process, such as an injection molding process. A thermoplastic polymeric material may be melted in the barrel of an injection molding system and combined with a physical or chemical blowing agent and optionally a crosslinking agent, and then injected into a mold under conditions which activate the blowing agent, forming a molded foam.

[0072] Optionally, when the resilient polymeric material is a foamed material, the foamed material may be a compression molded foam. Compression molding may be used to alter the physical properties (e.g., density, stiffness and/or durometer) of a foam, or to alter the physical appearance of the foam (e.g., to fuse two or more pieces of foam, to shape the foam, etc.), or both.

[0073] The compression molding process desirably starts by forming one or more foam preforms, such as by injection molding and foaming a polymeric material, by forming foamed particles or beads, by cutting foamed sheet stock, and the like. The compression molded foam may then be made by placing the one or more preforms formed of foamed polymeric material(s) in a compression mold, and applying sufficient pressure to the one or more preforms to compress the one or more preforms in a closed mold. Once the mold is closed, sufficient heat and/or pressure is applied to the one or more preforms in the closed mold for a sufficient duration of time to alter the preform(s) by forming a skin on the outer surface of the compression molded foam, fuse individual foam particles to each other, permanently increase the density of the foam(s), or any combination thereof. Following the heating and/or application of pressure, the mold is opened and the molded foam article is removed from the mold.

[0074] With continued reference to FIGS. **1-5**, the cradle **112** is received within the recess **154** of the cushioning element **110**, and cooperates with the cushioning element **110** and the outsole **104** to support the bladder **106**. In the illustrated example, the cradle **112** includes a top plate **162** and a bottom plate **164** connected to each other at opposite ends of the cradle **112** by a first end support **166** and a second end support **168**. When the sole structure **100** is assembled, the top plate **162** is received against the recessed surface **150** of the cushioning element **110**. Here, the first end support **166** of the cradle **112** is disposed adjacent to and faces the end wall **158** of the recess **154**, while the second end support **168** is adjacent to and faces the lip **156** of the cushioning element **110** at the posterior end **20** of the sole structure **100**. As best shown in FIG. **3**, the cradle **112** extends beyond the upper **200** at the posterior end **20** such that the second end support **168** is positioned behind a posterior end of the upper **200**, thereby providing a cantilevered configuration at the posterior end **20** of the article of footwear **10**. The plates **162**, **164** and end supports **166**, **168** cooperate to define an internal receptacle **170** configured to receive the bladder **106** therein when the sole structure **100** is assembled.

[0075] As shown, the top plate **162** extends from the first end support **166** to the second end support **168** and defines an upper portion of the receptacle **170**. The top plate **162** includes a projection **172** extending from an interior surface of the top plate **162** into the receptacle **170**. Generally, the projection **172** is configured to at least partially mate with the pocket **140** formed by the upper barrier layer **114** of the bladder **106**. As shown, the projection **172** includes a plurality of ribs **174** arranged in series along a direction from the first end support **166** to the second end support **168**. Each of the ribs **174** extends from the projection **172** to a distal end **176** facing the bottom plate **164**. Here, the ribs **174** are configured to be received between adjacent ones of the conduits **132** of the bladder **106**. Accordingly, sides of the

ribs **174** may be concave to receive corresponding convex portions of the conduits **132**. As best shown in the cross-sectional view of FIG. **7**, the ribs **174** may not extend fully between the conduits **132**, such that the distal ends **176** are spaced apart from the web area **120** when the sole structure **100** is assembled.

[0076] The bottom plate **164** also extends from the first end support **166** to the second end support **168** and defines a lower portion of the receptacle **170**. However, as best shown in FIGS. **5** and **6**, the bottom plate **164** includes an aperture **178** formed therethrough, which provides an opening into the receptacle **170** for receiving the bladder **106**. The aperture **178** has a peripheral profile corresponding to a peripheral profile of the bladder **106**. As shown in FIGS. **7** and **9**, when the sole structure **100** is assembled, the bladder **106** may sit within the aperture **178** so that the perimeter of the aperture **178** surrounds the perimeter of the bladder **106**.

[0077] As shown in FIGS. **5** and **6**, the top plate **162** and the bottom plate **164** are connected to each other at opposite ends of the cradle **112** by the end supports **166**, **168**. Each of the end supports **166**, **168** has an arcuate cross-sectional shape, and forms a semi-cylindrical shape at each end of the cradle **112**. The arcuate shape of each end support **166**, **168** forms a resilient structure at each end of the cradle **112**, which allows the plates **162**, **164** to be compressed towards each other. The end supports **166**, **168** may have different radiuses to provide different spring rates at each end of the cradle **112**.

[0078] An overall height H_{112} (FIG. **7**) of the cradle **112** is defined as the distance from the top plate **162** to the bottom plate **164**. In the illustrated example, the height H_{112} of the cradle **112** at each of the end supports **166**, **168** corresponds to a radius of the respective end support **166**, **168**. As shown, the first end support **166** has a smaller radius than the second end support **168** such that the height H_{112} of the cradle increases along the direction from the first end support **166** to the second end support **168**. Accordingly, the cradle **112** may have a smaller height H_{112} at the first end support **166** than at the second end support **168** to form a wedge-shaped cradle **112** in the heel region **16**.

[0079] Optionally, the first end support **166** may include a plurality of buttresses **180** for providing longitudinal stability and stiffness to the cradle **112**. In the illustrated example, the buttresses **180** are formed as a series of teeth **180** projecting from a lower portion of the first end support **166**. Each tooth includes a front side extending tangentially from a forward-most point of the first end support **166** and a bottom side formed flush with the bottom plate **162**. Thus, sides of the buttresses **180** intersect with each other adjacent to the outsole **104** to provide the lower portion of the first end support **166** with increased thickness. In use, the buttresses **180** provide longitudinal stiffness to the end support **166**. Accordingly, the buttresses **180** may minimize deformation when forces are applied to the top plate **162** in a direction towards the anterior end **18**, such as when stopping or landing during forward motion.

[0080] As provided above, the plates **162**, **164** and the end supports **166**, **168** cooperate to define the receptacle **170** of the cradle **112** for receiving the bladder **106** therein. As shown, the respective edges of the plates **162**, **164** and the supports **166**, **168** may cooperate to define openings **182** into the receptacle **170** on opposite sides of the cradle **112**. In other words, the receptacle **170** extends continuously through the cradle **112** from the lateral side **22** to the medial side **24**. In some examples, each opening **182** may be circumscribed by a flange **184** extending outwardly (i.e., away from the opening **182**) from the edges of the plates **162**, **164** and the end supports **166**, **168**. Accordingly, the flanges **184** extend outwardly around each side of the cradle **112** and may receive the cushioning element **110** and the outsole **104** therebetween to secure a lateral position of the cradle **112** in the sole structure **100**.

[0081] With reference to FIGS. **5** and **6**, the outsole **104** includes an inner surface **186** facing the midsole **102** and an exterior surface **188** defining a ground-engaging surface of the sole structure **100**. The outsole **104** may include a socket **190** formed on the inner surface **186**, which is configured to receive a lower portion (e.g., the lower barrier layer **116**) of the bladder **106** when the sole structure **100** is assembled. As shown in FIG. **6**, the socket **190** includes a pair of channels **192** formed on opposite sides of an elongate central protuberance **194**. Each of the channels **192** is configured to receive a lower portion of one of the cushions **130**. Accordingly, the channels **192** have a profile and arrangement corresponding to the shape (e.g., elongate with rounded ends) and arrangement (e.g., converging) of the cushions **130**.

[0082] The protuberance **194** of the socket **190** is configured to be received between the lower portions of the cushions **130**, adjacent to the web area **120**. As shown in FIG. **9**, the protuberance **194** contacts the lower barrier layer **116** along the web area **120** and is formed along the inner surface **186** by a portion of the outsole **104** that is indented between the channels **192**. As such, the protuberance **194** may form a depression in the exterior surface **188** of the outsole **104** between the cushions **130** of the bladder **106**. In use, the web area **120** and the protuberance **194** may provide a trampoline-like response between the cushions **130** of the bladder **106** when the heel region **16** is compressed by the heel of the foot.

[0083] The outsole **104** further includes a lower lip **196** configured to cooperate with the upper lip **156** of the cushioning element **110** to encompass the second end support **168** of the cradle **112**. As best shown in the cross-sectional view of FIG. **7**, the lower lip **196** extends upwardly from the outsole **104** and around a lower portion of the second end support **168** of the cradle **112**. In the illustrated example, the distal end of the upper lip **156** partially overlaps the distal end of the lower lip **196** to form a lap joint between the lips **156**, **196**. Optionally, the lower lip **196** may include a plurality of flexions **198** formed in the inner surface **186** of the outsole **104**. The flexions **198** of the lower lip **196** are configured as grooves extending across a width of the outsole **104**, which allow the lower lip **196** to be conformed to the outer surface of the second end support **168**.

[0084] As set forth above, the components of the sole structure **100** cooperate to form a pressure-responsive shock-absorber in the heel region **16** of the sole structure **100**. Here, the bladder **106** is constrained between the top plate **162** and the socket **190** of the outsole **104**. Accordingly, the bladder **106** provides cushioning and support along an intermediate portion of the cradle **112**. As best shown in FIG. **3**, the ends **136**, **138** of the cushions **130** are spaced apart from the end supports **166**, **168** of the cradle **112**. As provided above, the end supports **166**, **168** are arcuate in shape and, as such, are configured to bend or flex when the top plate **162** and the bottom plate **164** are compressed

towards each other. Accordingly, the end supports **166**, **168** provide supplementary support and cushioning to the bladder **106** in the heel region **16**. In some examples, the end supports **166**, **168** may be resilient structures that provide a responsive reaction to the foot after compression, similar to a spring.

[0085] While the chassis **108** and bladder **106** provide cushioning properties in the heel region **16**, the support member **152** provides cushioning and support in the forefoot region **12**. In some instances, the material of the cushioning element **110** may provide different performance characteristics than the chassis **108** and bladder **106**. For example, the support member **152** may provide localized, micro-level cushioning along the forefoot region **12** where the foot includes more joints, while the cradle provides more general, macro-level cushioning at the heel region **16** where the calcaneus bone is located.

[0086] The upper **200** is attached to the sole structure **100** and includes interior surfaces that define an interior void configured to receive and secure a foot for support on sole structure **100**. The upper **200** may be formed from one or more materials that are stitched or adhesively bonded together to form the interior void. Suitable materials of the upper may include, but are not limited to, mesh, textiles, foam, leather, and synthetic leather. The materials may be selected and located to impart properties of durability, air-permeability, wear-resistance, flexibility, and comfort.

[0087] The following Clauses provide exemplary configurations for an article of footwear, a bladder for an article of footwear, or a sole structure for an article of footwear described above.

[0088] Clause 1. A sole structure for an article of footwear, the sole structure comprising a cushioning element including a first material, a cradle including a second material, attached to the cushioning element, and including a first plate disposed against the cushioning element and a second plate spaced apart from the cushioning element, the second plate including an aperture, and a bladder disposed within the cradle and including a first portion contacting the first plate and a second portion extending through the aperture of the second plate.

[0089] Clause 2. The sole structure of Clause 1, further comprising an outsole disposed adjacent to the second plate on an opposite side of the cradle from the cushioning element.

[0090] Clause 3. The sole structure of Clause 2, wherein the second portion of the bladder contacts the outsole.

[0091] Clause 4. The sole structure of any of the preceding Clauses, wherein the second plate surrounds the second portion of the bladder.

[0092] Clause 5. The sole structure of any of the preceding Clauses, wherein the first plate and the second plate partially define a receptacle extending continuously through the cradle from a first side to a second side.

[0093] Clause 6. The sole structure of Clause 5, wherein the cradle includes an arcuate first end support connecting the first plate and the second plate at a first end of the cradle.

[0094] Clause 7. The sole structure of Clause 6, wherein the first end support is spaced apart from the bladder.

[0095] Clause 8. The sole structure of Clause 6, wherein the cradle includes an arcuate second end support connecting the first plate and the second plate at a second end of the cradle.

[0096] Clause 9. The sole structure of Clause 8, wherein the first end support and the second end support are spaced apart from the bladder.

[0097] Clause 10. The sole structure of Clause 8, wherein the first end support is a different size than the second end support.

[0098] Clause 11. A sole structure for an article of footwear, the sole structure comprising a cushioning element, a cradle received by the cushioning element and defining a receptacle extending continuously through the cradle from a first side of the sole structure to a second side of the sole structure, and a bladder including a first portion disposed within the receptacle and a second portion extending through the cradle.

[0099] Clause 12. The sole structure of Clause 11, further comprising an outsole disposed on an opposite side of the cradle from the cushioning element.

[0100] Clause 13. The sole structure of Clause 12, wherein the second portion of the bladder contacts the outsole through the cradle.

[0101] Clause 14. The sole structure of any of the preceding Clauses, wherein the cradle includes a first plate surrounding the second portion of the bladder.

[0102] Clause 15. The sole structure of Clause 14, wherein the cradle includes a second plate spaced apart from the first plate, the first portion of the bladder contacting the second plate.

[0103] Clause 16. The sole structure of Clause 15, wherein the cradle includes an arcuate first end support connecting the first plate and the second plate at a first end of the cradle.

[0104] Clause 17. The sole structure of Clause 16, wherein the first end support is spaced apart from the bladder.

[0105] Clause 18. The sole structure of Clause 16, wherein the cradle includes an arcuate second end support connecting the first plate and the second plate at a second end of the cradle.

[0106] Clause 19. The sole structure of Clause 18, wherein the first end support and the second end support are spaced apart from the bladder.

[0107] Clause 20. The sole structure of Clause 18, wherein the first end support is a different size than the second end support.

[0108] The foregoing description has been provided for purposes of illustration and description. It is not intended to be exhaustive or to limit the disclosure. Individual elements or features of a particular configuration are generally not limited to that particular configuration, but, where applicable, are interchangeable and can be used in a selected configuration, even if not specifically shown or described. The same may also be varied in many ways. Such variations are not to be regarded as a departure from the disclosure, and all such modifications are intended to be included within the scope of the disclosure.

What is claimed is:

1. A sole structure for an article of footwear, the sole structure comprising:

a cushioning element extending from a first end in a forefoot region of the sole structure to a second end in a heel region of the sole structure;

an outsole spaced apart from the cushioning element to define a gap between the cushioning element and the outsole and defining a ground-engaging surface of the

sole structure, the outsole extending from a first end in the forefoot region to a second end in the heel region; and

a cradle disposed within the gap and defining an arcuate surface facing a posterior end of the sole structure, the second end of the cushioning element extending over the arcuate surface to define a first portion of a posterior surface of the sole structure.

2. The sole structure of claim **1**, wherein the second end of the outsole extends over the arcuate surface to define a second portion of the posterior surface of the sole structure.

3. The sole structure of claim **1**, wherein the second end of the outsole opposes the second end of the cushioning element at the arcuate surface.

4. The sole structure of claim **1**, wherein the second end of the outsole abuts the second end of the cushioning element along the arcuate surface.

5. The sole structure of claim **1**, wherein the arcuate surface of the cradle is formed as a first semi-circular end support extending between an upper plate and a lower plate of the cradle.

6. The sole structure of claim **5**, wherein the cradle further comprises a second semi-circular end support disposed at an anterior end of the cradle, the upper plate and the lower plate extending between and joining the first semi-circular end support and the second semi-circular end support.

7. The sole structure of claim **1**, wherein the cradle defines a receptacle extending from a medial side of the sole structure to a lateral side of the sole structure, the arcuate surface being disposed at a posterior end of the receptacle.

8. The sole structure of claim **7**, further comprising a bladder disposed within the receptacle.

9. The sole structure of claim **8**, wherein the arcuate surface of the cradle is spaced apart from the bladder.

10. The sole structure of claim **1**, wherein the cushioning element and the outsole cooperate to enclose the arcuate surface of the cradle at the posterior end of the sole structure.

11. A sole structure for an article of footwear, the sole structure comprising:

a cushioning element extending from a first end in a forefoot region of the sole structure to a second end in a heel region of the sole structure;

an outsole spaced apart from the cushioning element to define a gap between the cushioning element and the outsole and defining a ground-engaging surface of the sole structure, the outsole extending from a first end in the forefoot region to a second end in the heel region; and

a cradle disposed within the gap and defining an arcuate surface facing a posterior end of the sole structure, the second end of the outsole extending over the arcuate surface to define a first portion of a posterior surface of the sole structure.

12. The sole structure of claim **11**, wherein the second end of the cushioning element extends over the arcuate surface to define a second portion of the posterior surface of the sole structure.

13. The sole structure of claim **11**, wherein the second end of the cushioning element opposes the second end of the outsole at the arcuate surface.

14. The sole structure of claim **11**, wherein the second end of the outsole abuts the second end of the cushioning element along the arcuate surface.

15. The sole structure of claim **11**, wherein the arcuate surface of the cradle is formed as a first semi-circular end support extending between an upper plate and a lower plate of the cradle.

16. The sole structure of claim **15**, wherein the cradle further comprises a second semi-circular end support disposed at an anterior end of the cradle, the upper plate and the lower plate extending between and joining the first semi-circular end support and the second semi-circular end support.

17. The sole structure of claim **11**, wherein the cradle defines a receptacle extending from a medial side of the sole structure to a lateral side of the sole structure, the arcuate surface being disposed at a posterior end of the receptacle.

18. The sole structure of claim **17**, further comprising a bladder disposed within the receptacle.

19. The sole structure of claim **18**, wherein the arcuate surface of the cradle is spaced apart from the bladder.

20. The sole structure of claim **11**, wherein the cushioning element and the outsole cooperate to enclose the arcuate surface of the cradle at the posterior end of the sole structure.

* * * * *