US012414282B2

(12) **United States Patent**
Liaw

(10) **Patent No.: US 12,414,282 B2**
(45) **Date of Patent: Sep. 9, 2025**

(54) **SEMICONDUCTOR DEVICE**

(71) Applicant: **Taiwan Semiconductor Manufacturing Company, Ltd.**, Hsinchu (TW)

(72) Inventor: **Jhon-Jhy Liaw**, Zhudong Township, Hsinchu County (TW)

(73) Assignee: **Taiwan Semiconductor Manufacturing Company, Ltd.**, Hsin-Chu (TW)

(*) Notice: Subject to any disclaimer, the term of this patent is extended or adjusted under 35 U.S.C. 154(b) by 444 days.

(21) Appl. No.: **18/149,402**

(22) Filed: **Jan. 3, 2023**

(65) **Prior Publication Data**

US 2024/0224489 A1 Jul. 4, 2024

(51) **Int. Cl.**
H10B 10/00 (2023.01)

(52) **U.S. Cl.**
CPC ***H10B 10/125*** (2023.02)

(58) **Field of Classification Search**
CPC H10B 10/125; H10B 10/12; H10D 89/10
USPC 365/185.07
See application file for complete search history.

(56) **References Cited**

U.S. PATENT DOCUMENTS

8,009,463 B2 8/2011 Liaw
8,189,368 B2 * 5/2012 Liaw H10D 86/011 365/230.05
8,315,084 B2 11/2012 Liaw et al.
8,675,397 B2 3/2014 Liaw
8,995,176 B2 3/2015 Liaw
9,099,172 B2 8/2015 Liaw
9,209,247 B2 12/2015 Colinge et al.
9,236,267 B2 1/2016 De et al.
9,373,386 B2 6/2016 Liaw
9,412,817 B2 8/2016 Yang et al.
9,412,828 B2 8/2016 Ching et al.
9,418,728 B2 8/2016 Liaw
9,472,618 B2 10/2016 Oxland
9,502,265 B1 11/2016 Jiang et al.
9,520,482 B1 12/2016 Chang et al.
9,536,738 B2 1/2017 Huang et al.
9,576,814 B2 2/2017 Wu et al.
(Continued)

OTHER PUBLICATIONS

U.S. Appl. No. 17/671,288, filed Feb. 14, 2022.

Primary Examiner — Fernando Hidalgo
(74) *Attorney, Agent, or Firm* — Cooper Legal Group, LLC

(57) **ABSTRACT**

Semiconductor devices with dual-port memory cells are provided. First inverter includes first pull-up transistor, and first and second pull-down transistors connected in parallel. Second inverter includes second pull-up transistor, and third and fourth pull-down transistors connected in parallel. First and second pass-gate transistors are coupled to the first inverter to form a first port. Third and fourth pass-gate transistors are coupled to the second inverter to form a second port. First and second pass-gate transistors and the first and third pull-down transistors share first continuous active region. The third and fourth pass-gate transistors and the second and fourth pull-down transistors share a second continuous active region. The first and second pull-up transistors and first and second isolation transistors share a third continuous active region. Gates of the first and second isolation transistors are electrically connected to VDD line. Sources of the first and second isolation transistors are floating.

20 Claims, 26 Drawing Sheets

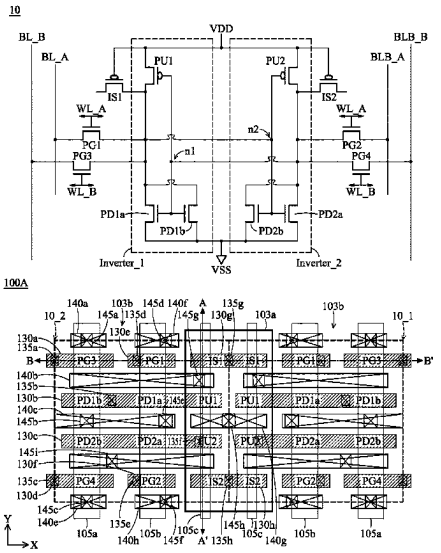

(56) **References Cited**

U.S. PATENT DOCUMENTS

9,608,116	B2	3/2017	Ching et al.	
9,613,953	B2	4/2017	Liaw	
9,646,974	B1	5/2017	Liaw	
9,773,545	B2	9/2017	Liaw	
9,793,273	B2	10/2017	Liaw	
9,805,985	B2	10/2017	Liaw	
9,824,747	B2	11/2017	Liaw	
9,858,985	B2 *	1/2018	Liaw	G11C 8/16
9,916,893	B2	3/2018	Liaw	
10,170,480	B2	1/2019	Liaw	
2002/0181273	A1 *	12/2002	Nii	G11C 11/412 365/154
2011/0222332	A1 *	9/2011	Liaw	H10B 10/12 365/156
2015/0009750	A1 *	1/2015	Schaefer	H10B 10/00 365/156
2019/0206469	A1 *	7/2019	Trinh Quang	G11C 11/1673
2020/0027869	A1 *	1/2020	Yeh	H10B 10/00
2021/0202498	A1 *	7/2021	Liaw	H01L 21/02603
2023/0013845	A1 *	1/2023	Liaw	H10D 89/10

* cited by examiner

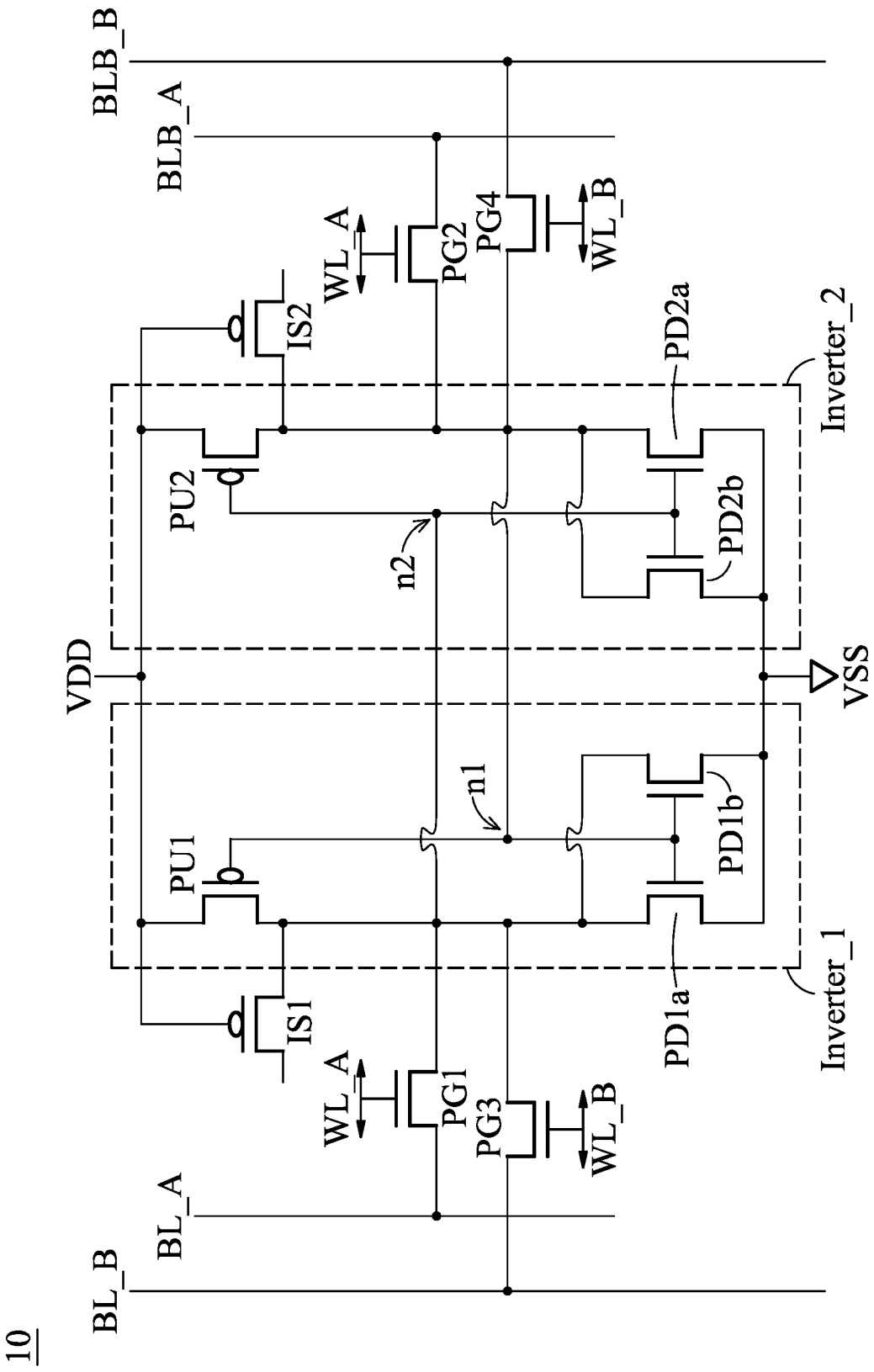
10
BL_B
BL_A
BLB_A
BLB_B
WL_A
WL_B
PG1
PG2
PG3
PG4
IS1
IS2
PU1
PU2
PD1a
PD1b
PD2a
PD2b
n1
n2
VDD
VSS
Inverter_1
Inverter_2

FIG. 1

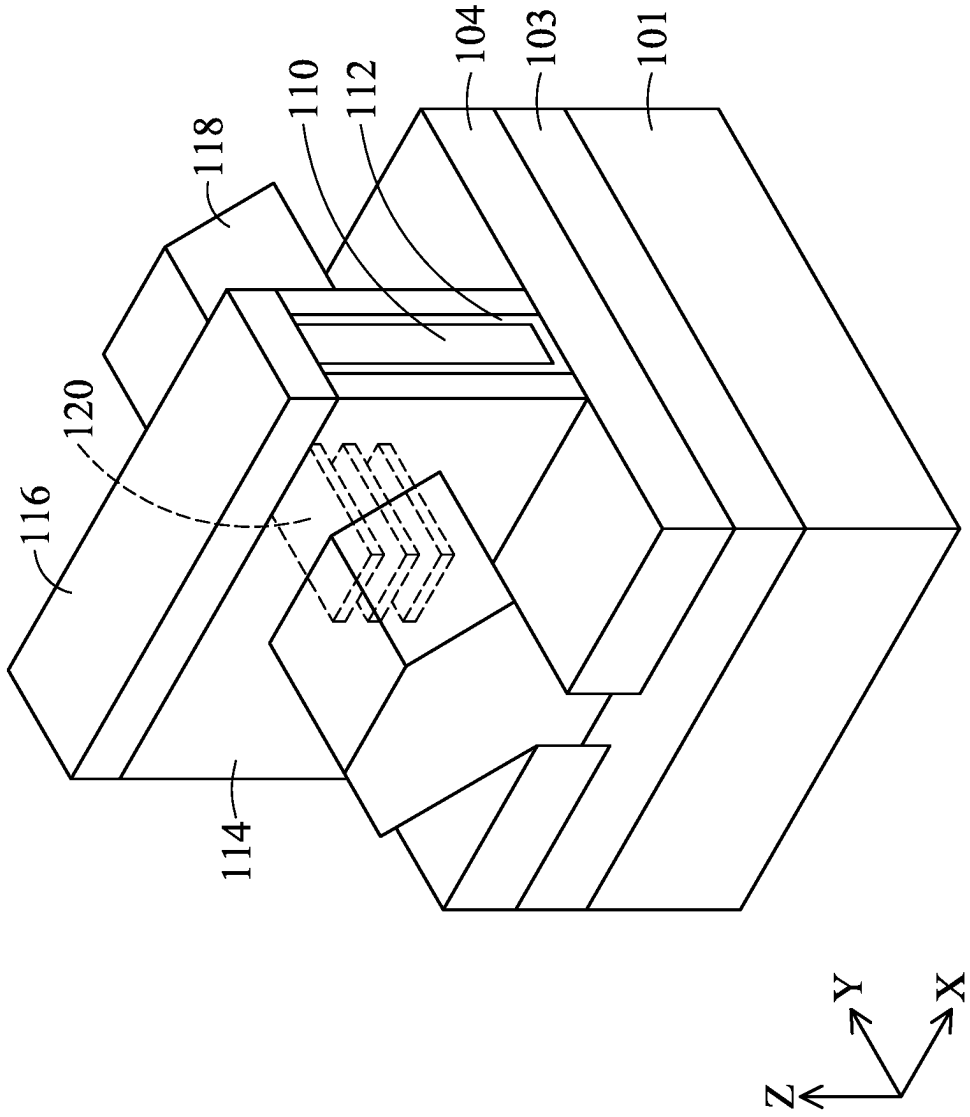

FIG. 2

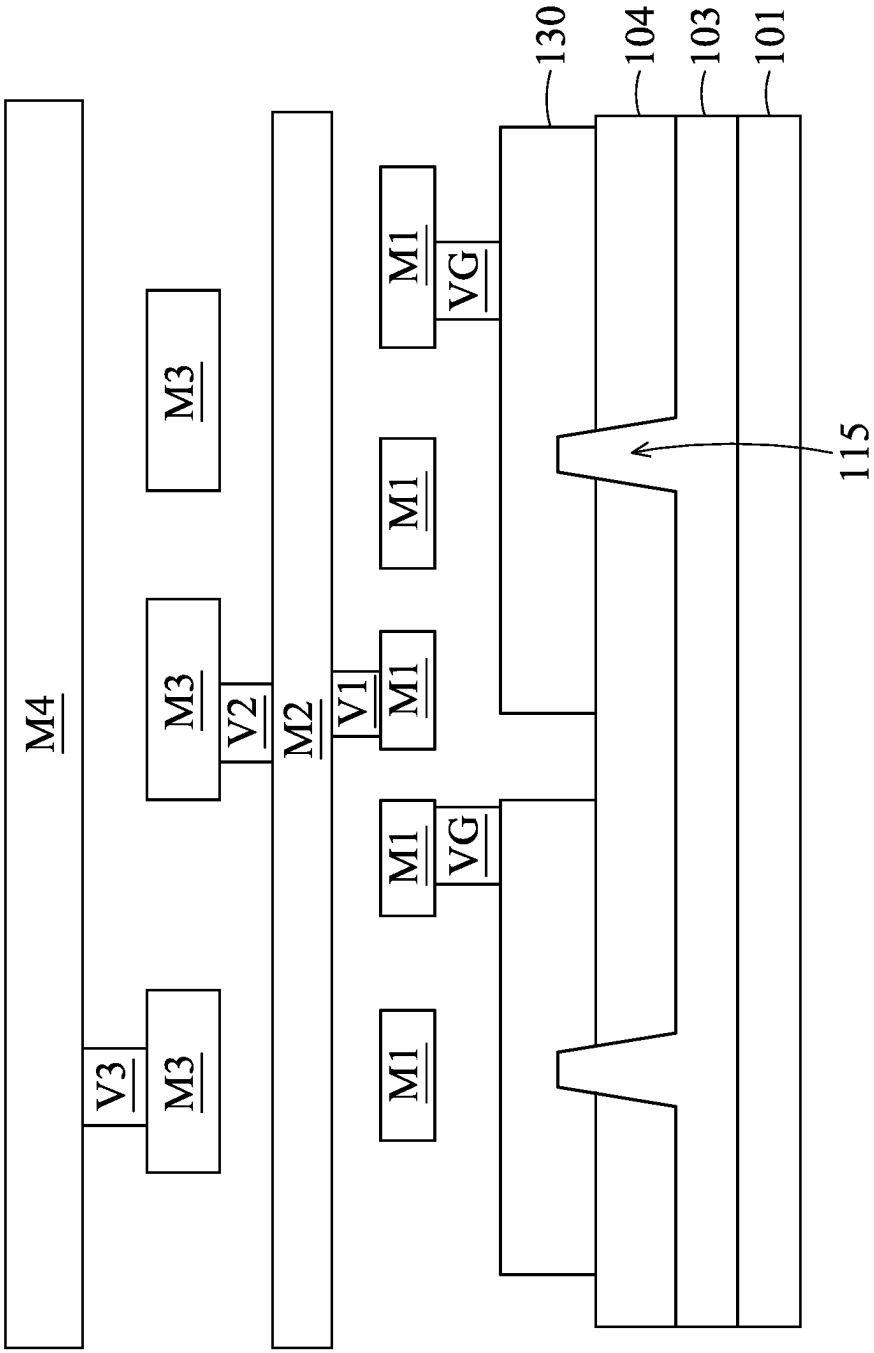

FIG. 3

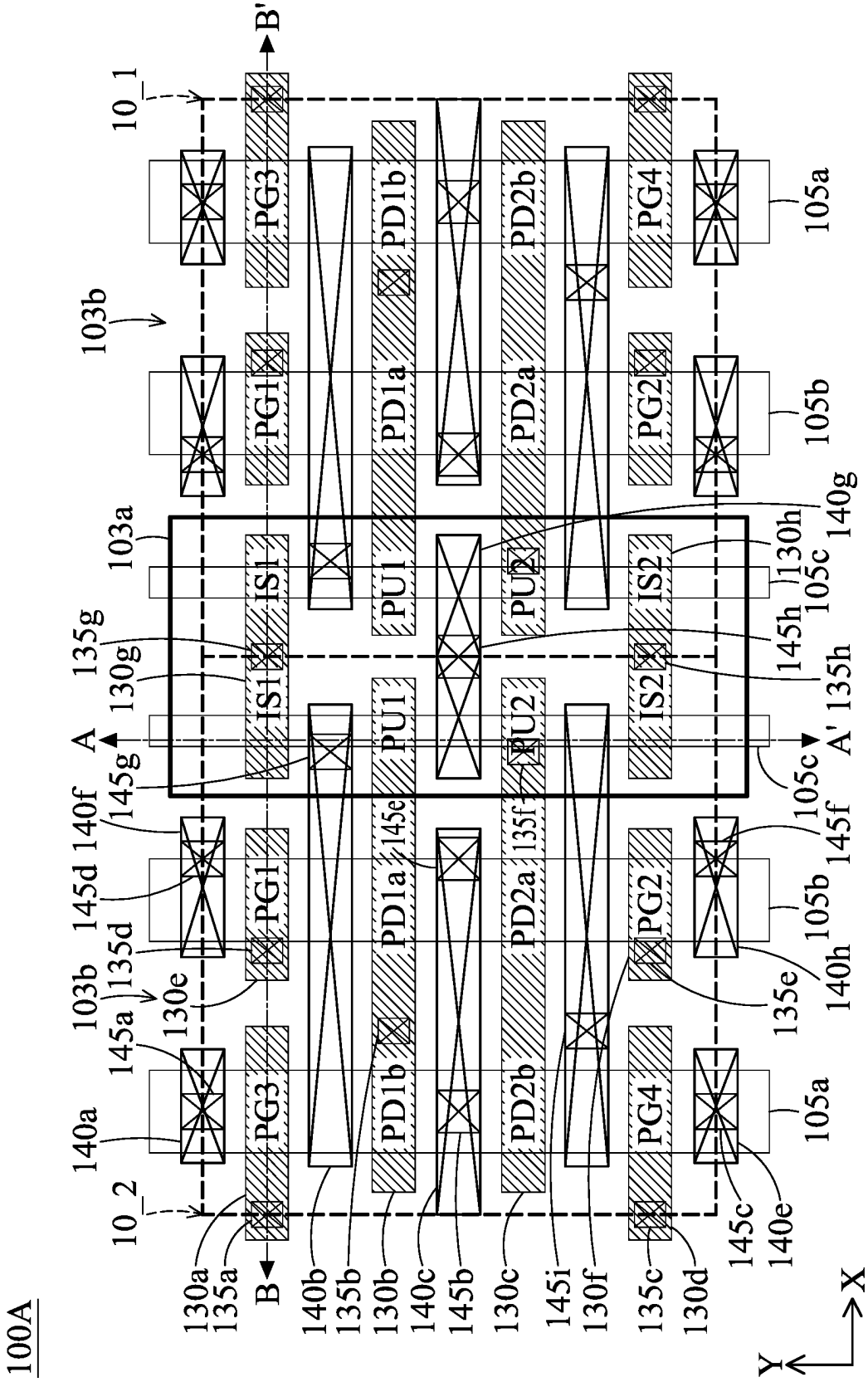
100A
10_1
10_2
103a
103b
A
A'
B
B'
X
Y
PG1
PG2
PG3
PG4
PD1a
PD1b
PD2a
PD2b
PU1
PU2
IS1
IS2
105a
105b
105c
130a
130b
130c
130d
130e
130f
130g
130h
135a
135b
135c
135d
135e
135f
135g
135h
140a
140b
140c
140d
140e
140f
140g
140h
145a
145b
145c
145d
145e
145f
145g
145h
145i

FIG. 4A

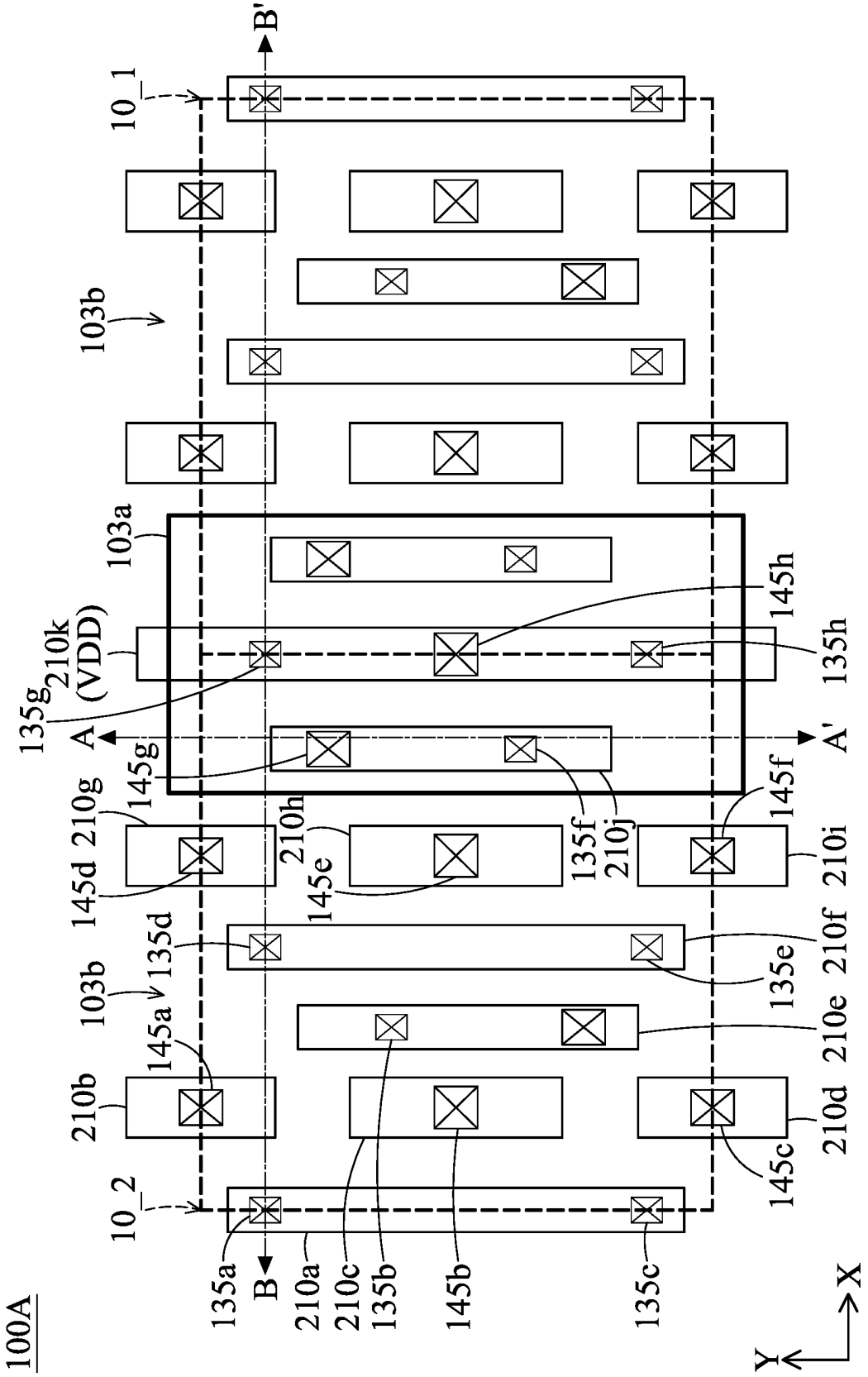
100A
10_1
10_2
B'
B
A
A'
103a
103b
103b
210k
(VDD)
135g
145g
145h
135h
210g
145d
210h
145e
135f
210j
145f
210i
135d
210f
135e
210e
145a
210b
210d
145c
135a
210a
210c
135b
145b
135c
X
Y

FIG. 4B

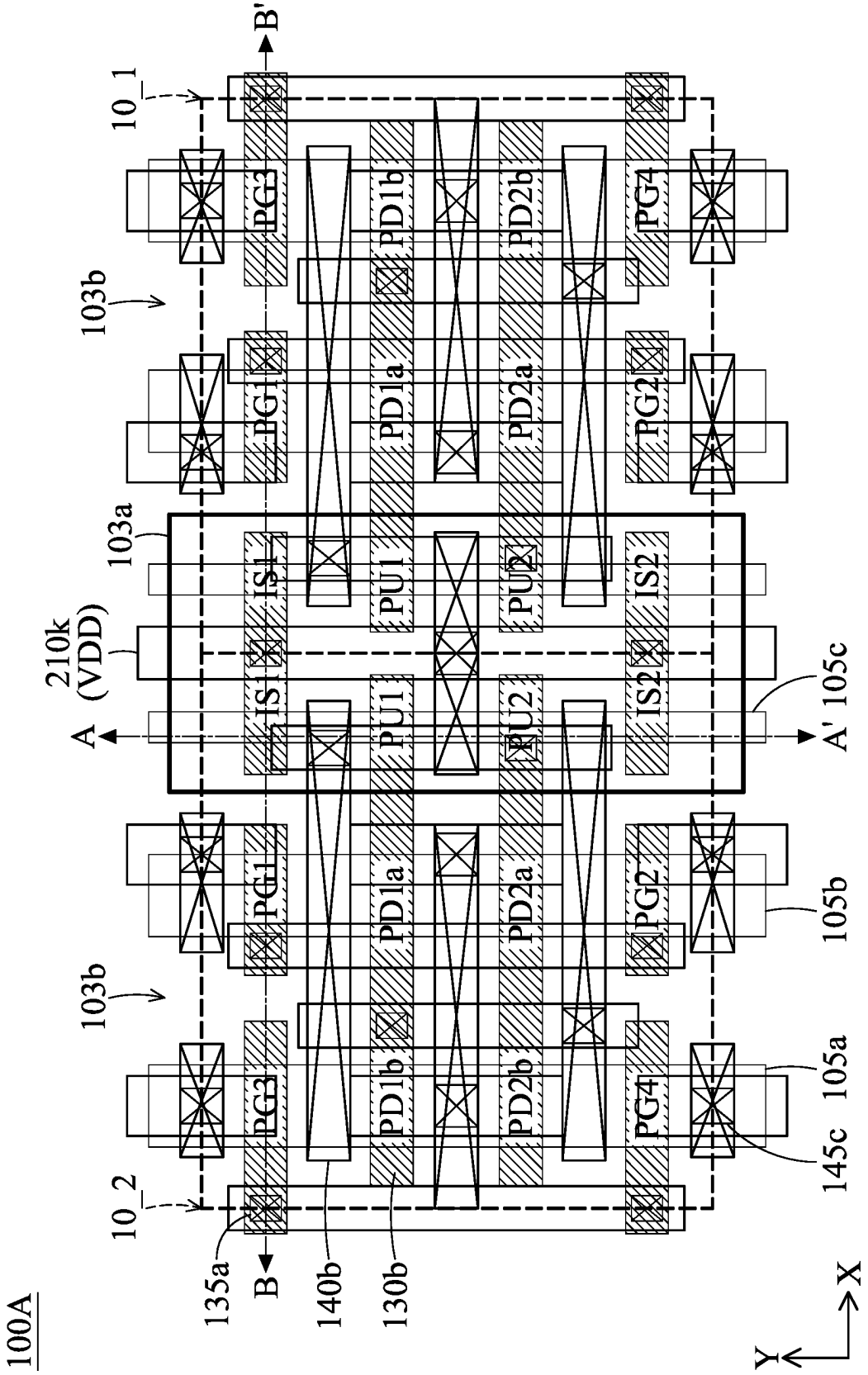
100A
10_1
10_2
B'
B
A
A'
103a
103b
103b
210k
(VDD)
PG3
PG1
PG1
PG3
PD1b
PD1a
PD1a
PD1b
PD2b
PD2a
PD2a
PD2b
PG4
PG2
PG2
PG4
IS1
IS1
IS2
IS2
PU1
PU1
PU2
PU2
135a
140b
130b
145c
105a
105b
105c
X
Y

FIG. 4C

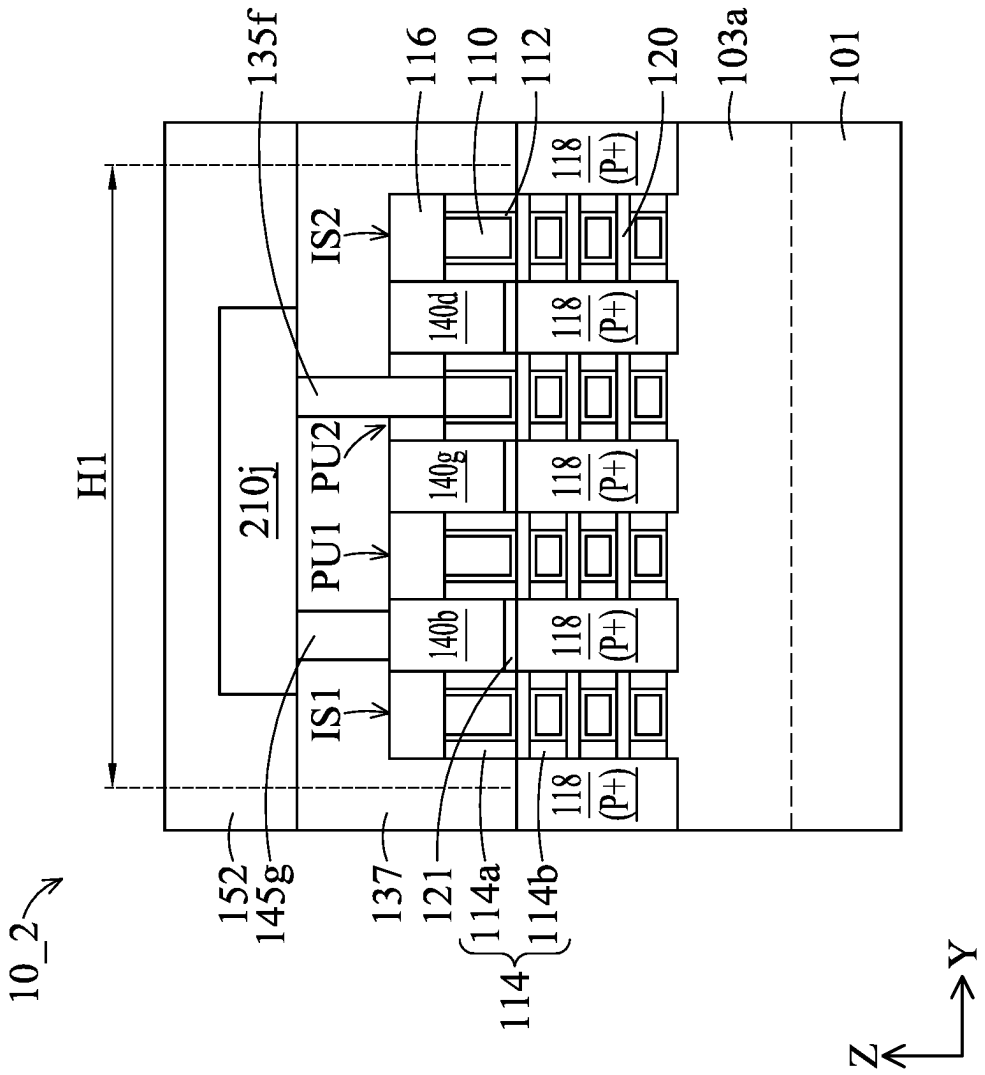
10_2
152
145g
137
121
114a
114b
114
135f
H1
210j
IS1
PU1
PU2
IS2
140b
140g
140d
116
110
112
118
(P+)
120
103a
101
Z
Y

FIG. 5A

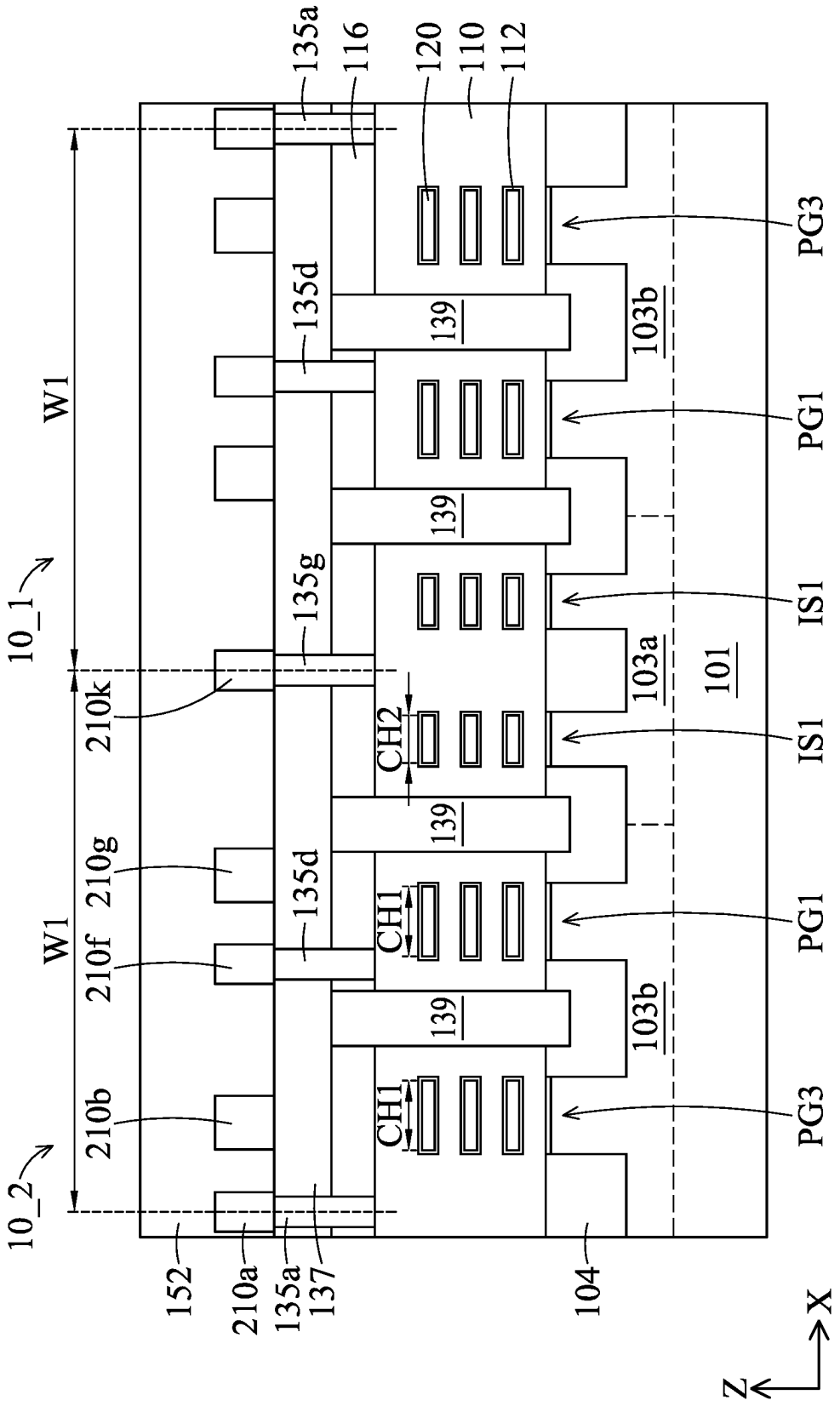
135a
116
120
110
112
PG3
135d
139
103b
W1
PG1
139
10_1
135g
IS1
210k
103a
101
CH2
IS1
139
210g
135d
CH1
PG1
W1
210f
139
103b
210b
CH1
PG3
10_2
152
210a
135a
137
104
Z
X

FIG. 5B

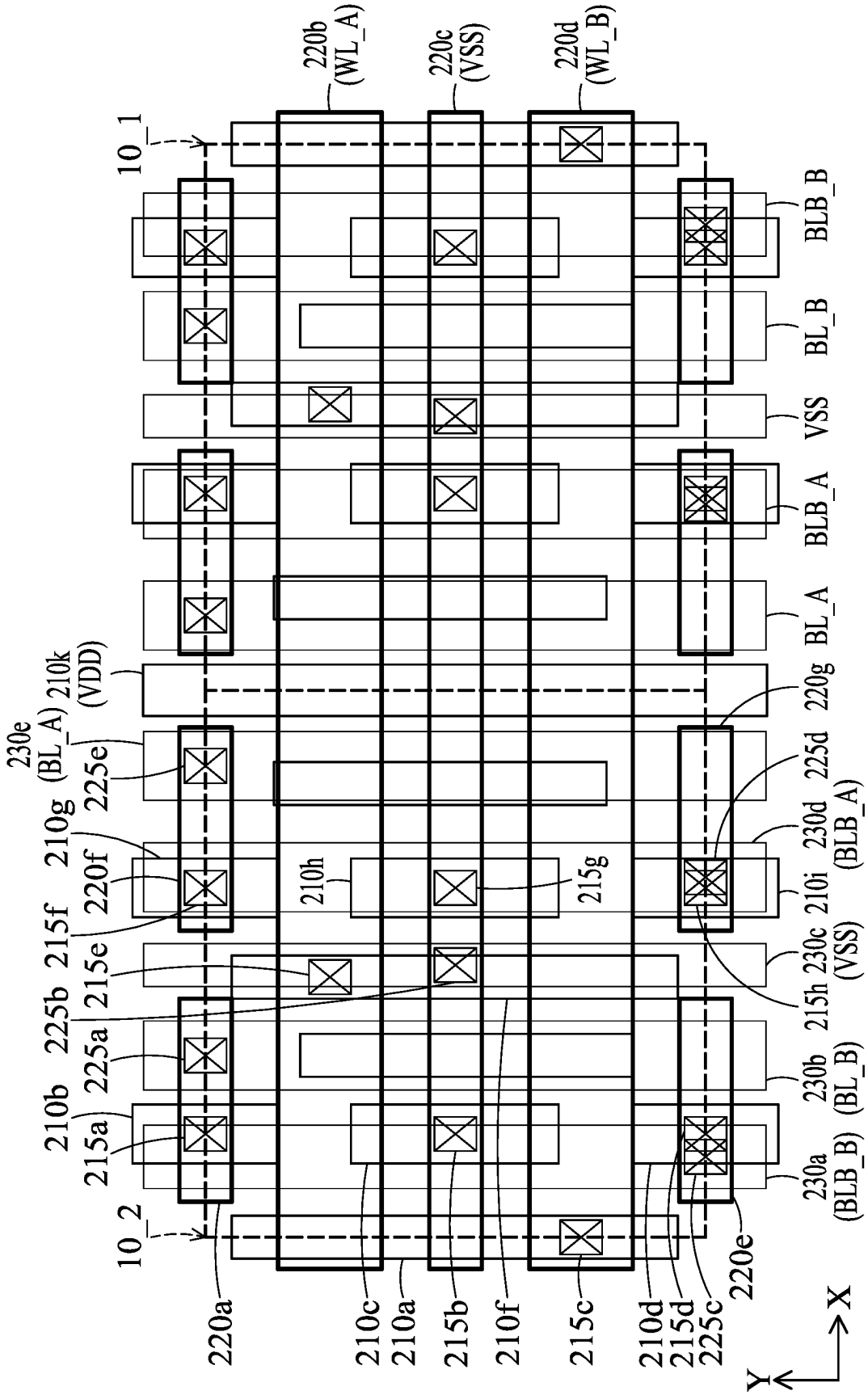
220b (WL_A)
220c (VSS)
220d (WL_B)
10_1
10_2
BLB_B
BL_B
VSS
BLB_A
BL_A
210k (VDD)
230e (BL_A)
225e
210g
220f
215f
225b
215e
225a
210b
215a
210h
215g
220g
225d
230d (BLB_A)
210i
230c (VSS)
215h
230b (BL_B)
230a (BLB_B)
220a
210c
210a
215b
210f
215c
210d
215d
225c
220e
X
Y

FIG. 6

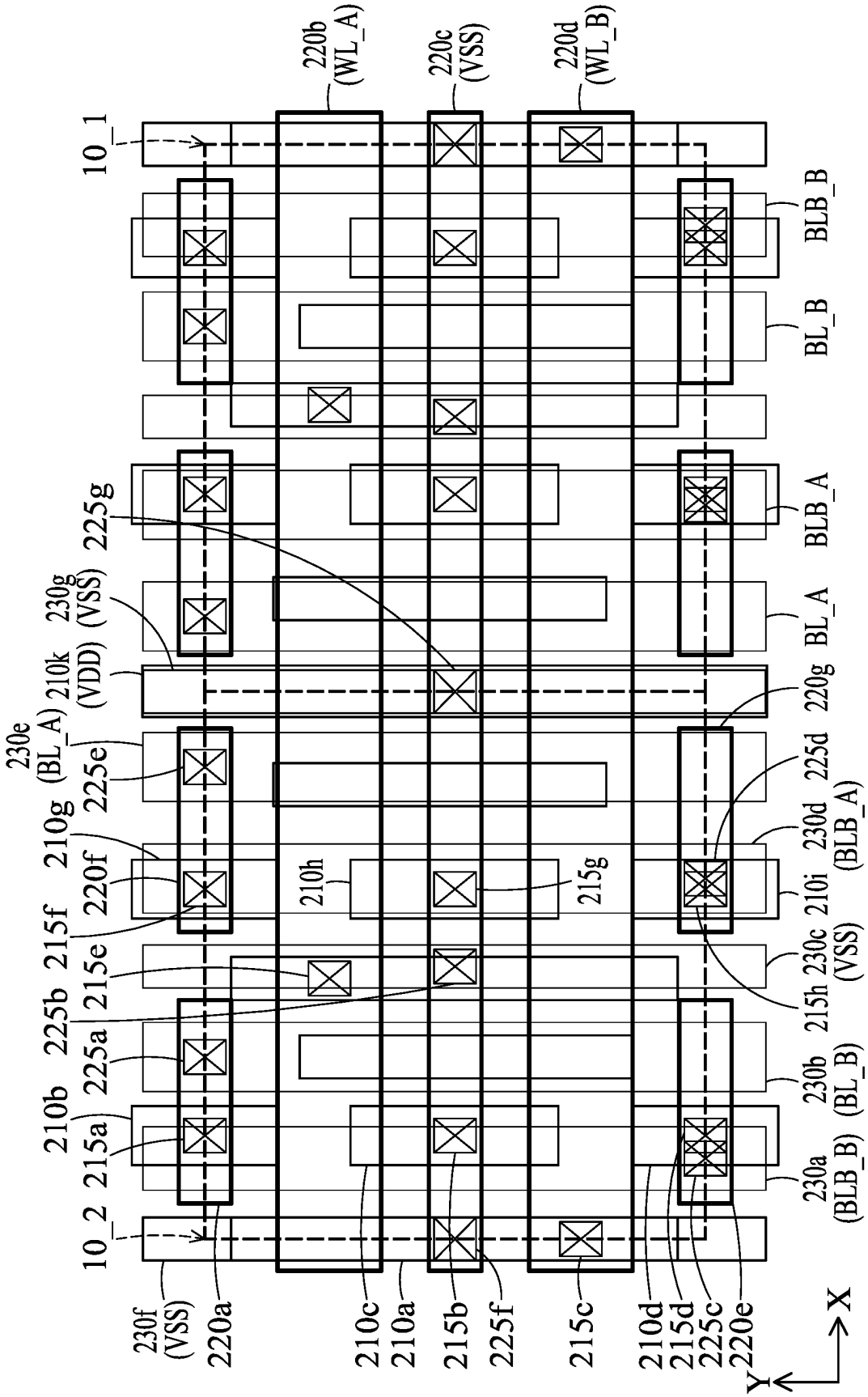
10_1
10_2
220b (WL_A)
220c (VSS)
220d (WL_B)
BLB_B
BL_B
BLB_A
BL_A
225g
230g (VSS)
210k (VDD)
230e (BL_A)
225e
210g
220f
215f
225b
215e
225a
210b
215a
230f (VSS)
220a
210c
210a
215b
225f
215c
210d
215d
225c
220e
210h
215g
220g
225d
230d (BLB_A)
210i
230c (VSS)
215h
230b (BL_B)
230a (BLB_B)
X
Y

FIG. 7

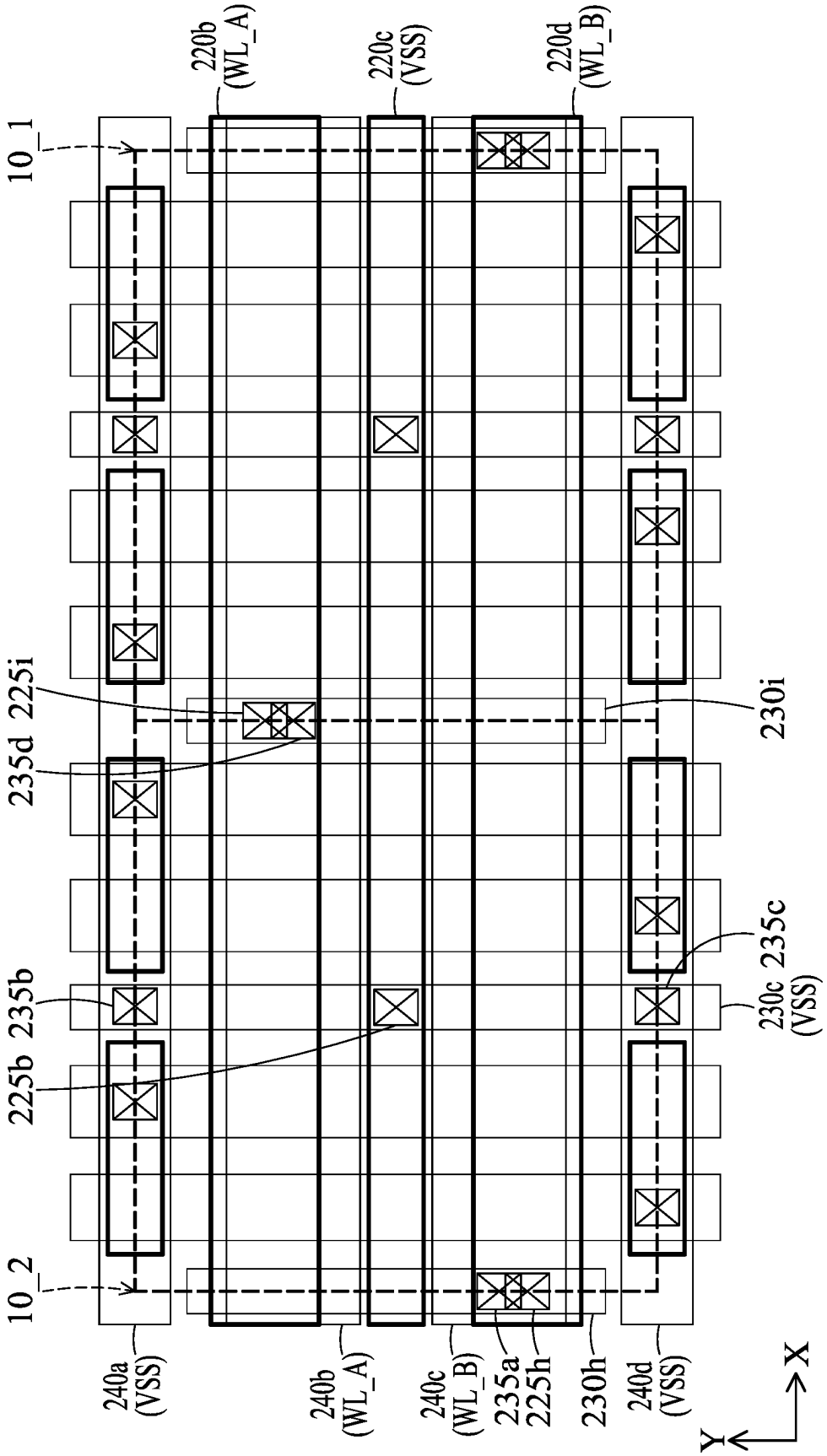
10_1
10_2
220b (WL_A)
220c (VSS)
220d (WL_B)
225i
235d
230i
235b
225b
235c
230c (VSS)
240a (VSS)
240b (WL_A)
240c (WL_B)
235a
225h
230h
240d (VSS)
X
Y

FIG. 8

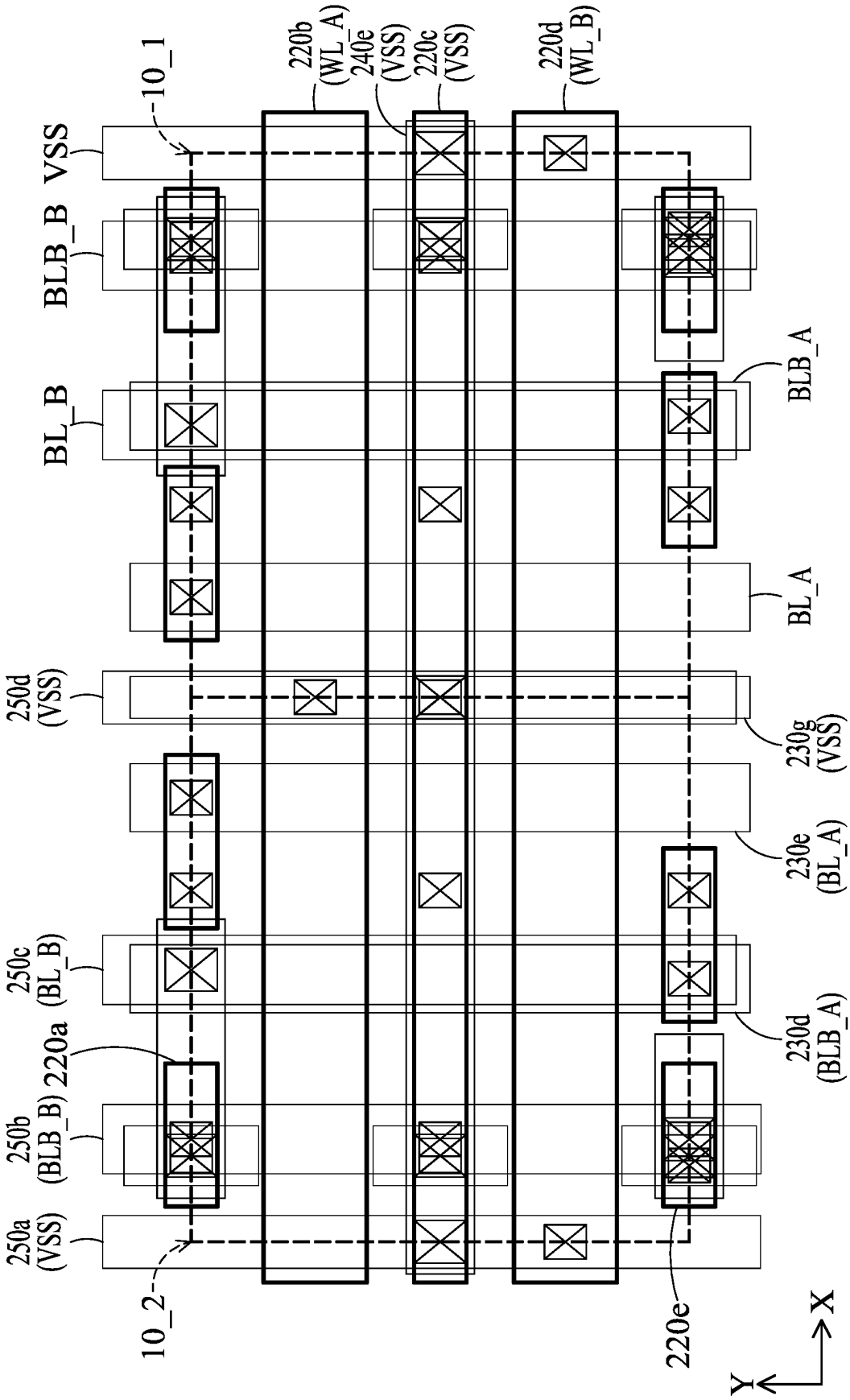
10_1
220b (WL_A)
240e (VSS)
220c (VSS)
220d (WL_B)
VSS
BLB_B
BL_B
BLB_A
BL_A
250d (VSS)
230g (VSS)
230e (BL_A)
250c (BL_B)
230d (BLB_A)
220a
250b (BLB_B)
250a (VSS)
10_2
220e
X
Y

FIG. 9

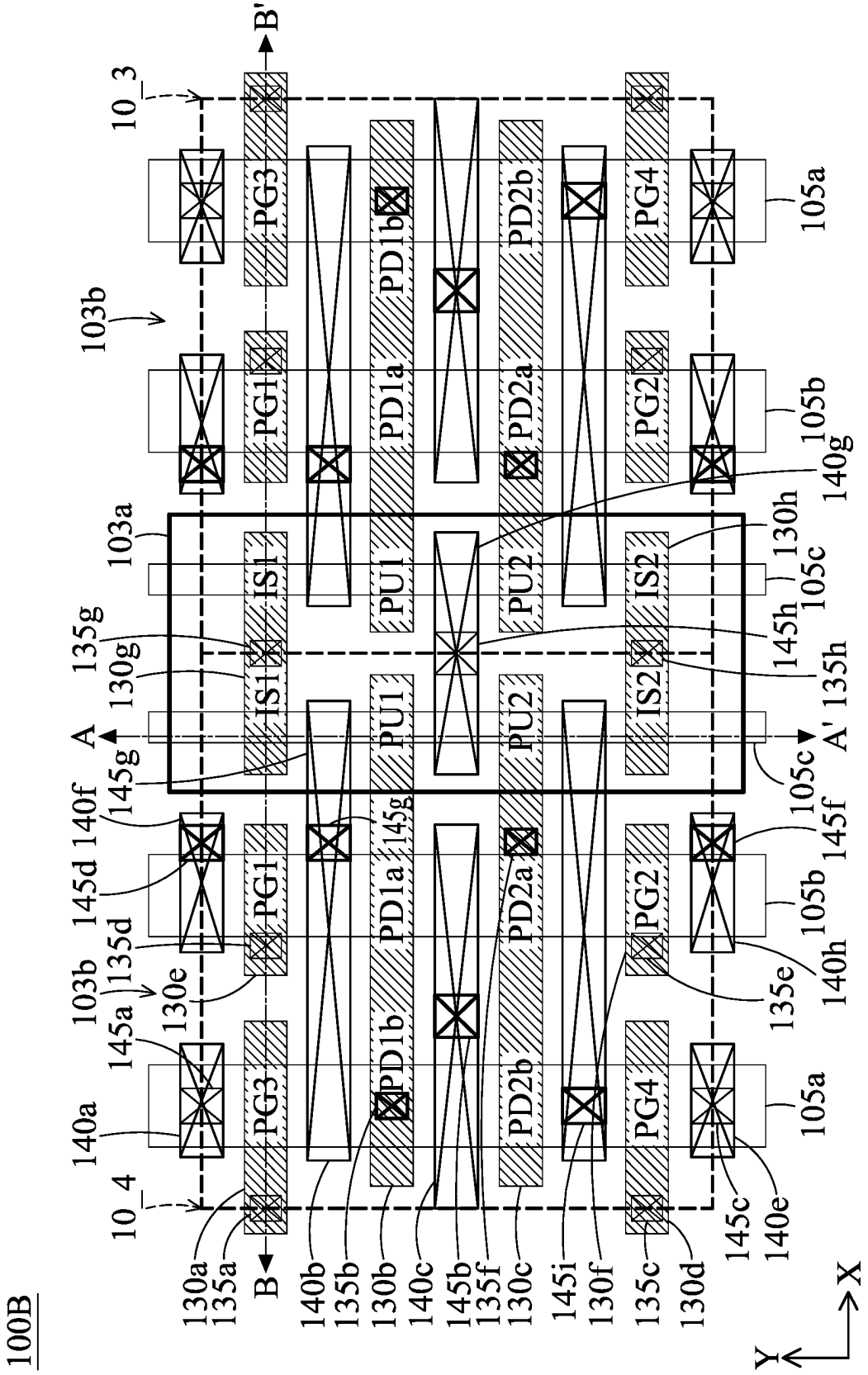
100B
10_3
10_4
103a
103b
A
A'
B
B'
X
Y
PG1
PG2
PG3
PG4
PD1a
PD1b
PD2a
PD2b
PU1
PU2
IS1
IS2
105a
105b
105c
130a
130b
130c
130d
130e
130f
130g
130h
135a
135b
135c
135d
135e
135f
135g
135h
140a
140b
140c
140d
140e
140f
140g
140h
145a
145b
145c
145d
145f
145g
145h
145i

FIG. 10A

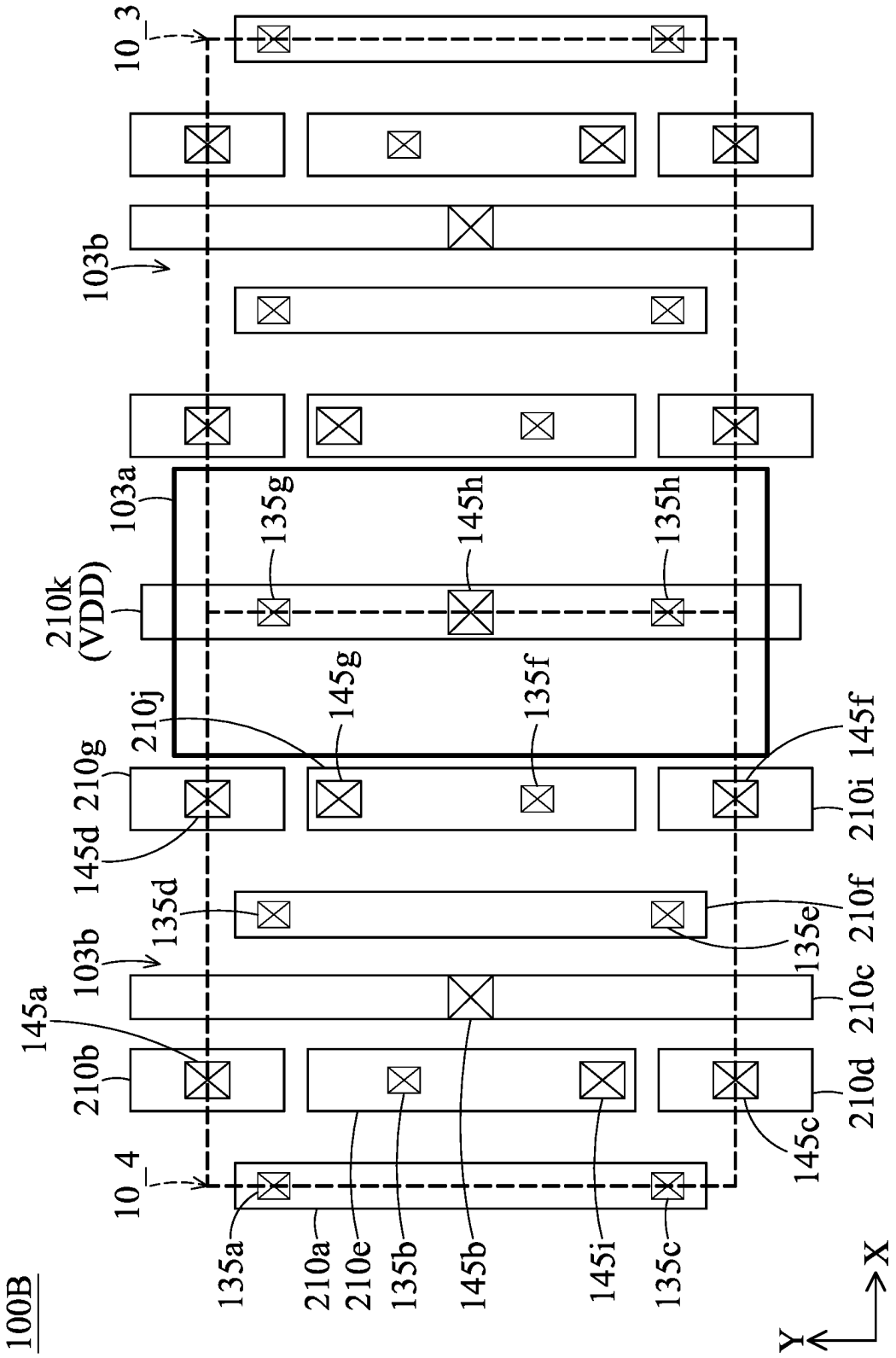
100B
10_3
10_4
103a
103b
210k
(VDD)
210j
210g
210b
210a
210e
210c
210d
210i
210f
135a
135b
135c
135d
135e
135f
135g
135h
145a
145b
145c
145d
145f
145g
145h
145i
X
Y

FIG. 10B

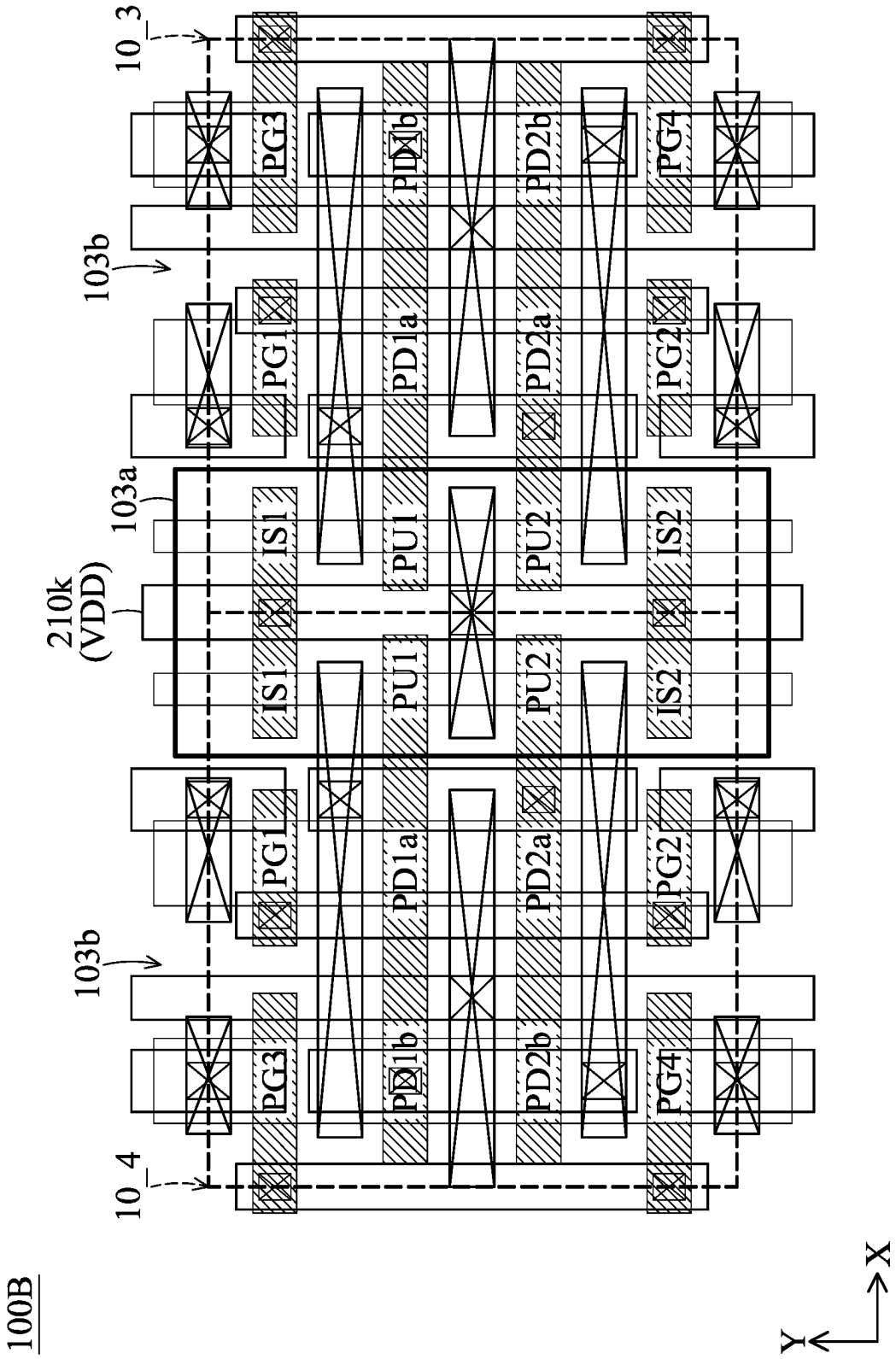
100B
10_4
103b
PG3
PD1b
PD2b
PG4
PG1
PD1a
PD2a
PG2
103a
IS1
PU1
PU2
IS2
210k
(VDD)
IS1
PU1
PU2
IS2
PG1
PD1a
PD2a
PG2
103b
PG3
PD1b
PD2b
PG4
10_3
Y
X

FIG. 10C

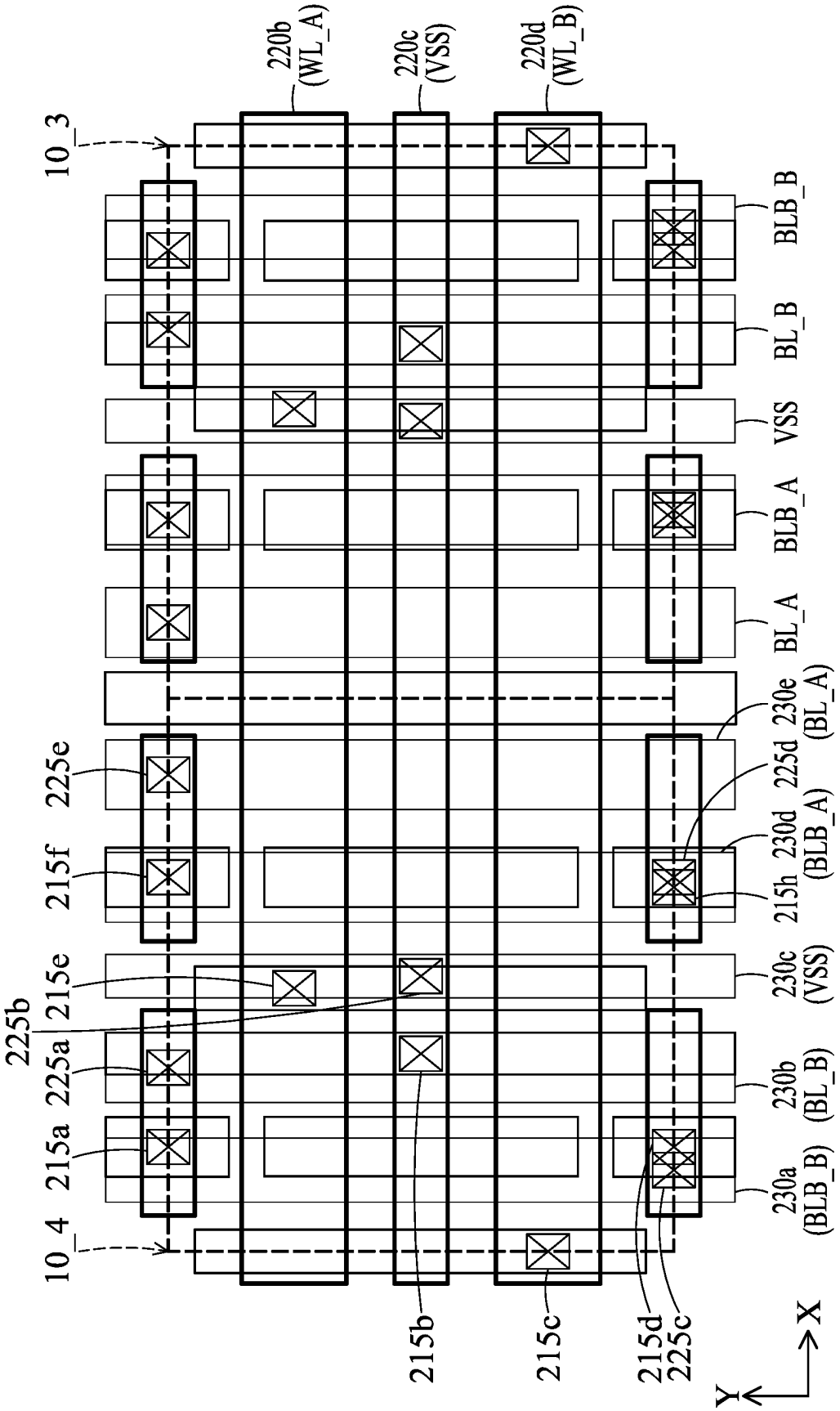
220b (WL_A)
220c (VSS)
220d (WL_B)
10_3
10_4
BLB_B
BL_B
VSS
BLB_A
BL_A
230e (BL_A)
225d
230d (BLB_A)
215h
230c (VSS)
230b (BL_B)
230a (BLB_B)
225e
215f
215e
225b
225a
215a
215b
215c
215d
225c
X
Y

FIG. 11

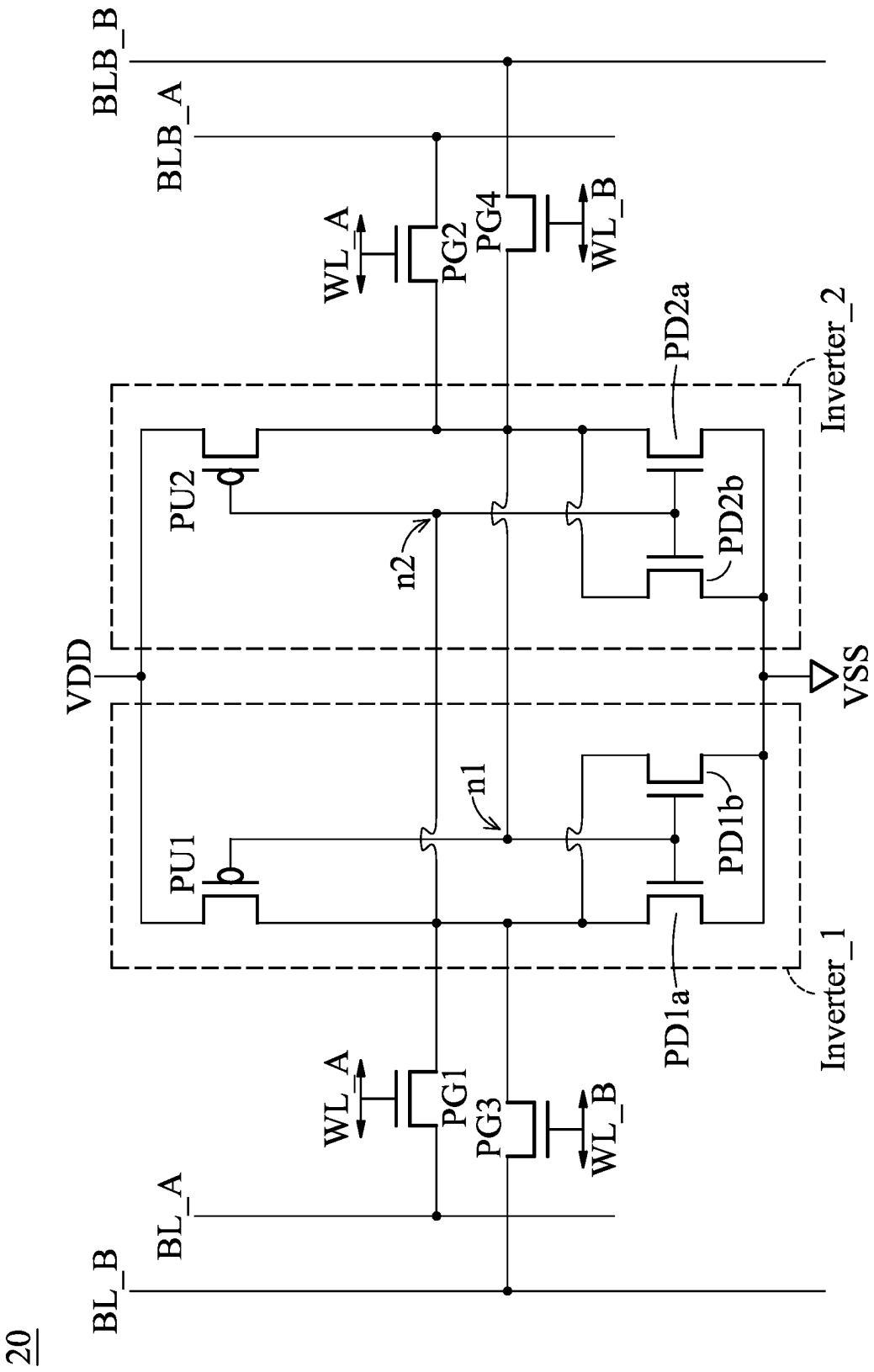
20
BL_B
BL_A
BLB_A
BLB_B
WL_A
PG1
PG3
WL_B
WL_A
PG2
PG4
WL_B
PU1
PU2
n1
n2
PD1a
PD1b
PD2a
PD2b
VDD
VSS
Inverter_1
Inverter_2

FIG. 12

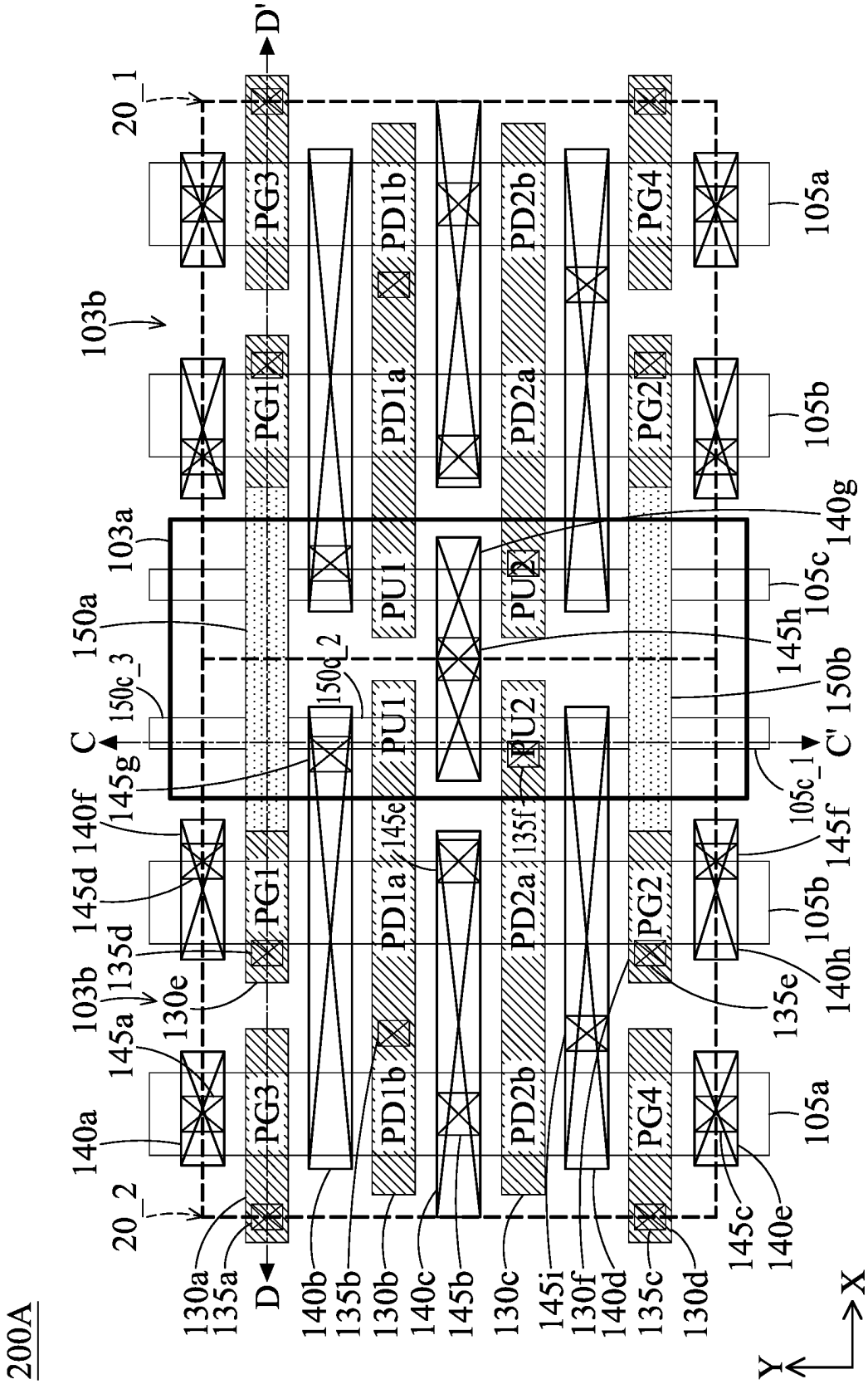
200A
20_1
20_2
D
D'
C
C'
X
Y
PG1
PG2
PG3
PG4
PD1a
PD1b
PD2a
PD2b
PU1
PU2
103a
103b
105a
105b
105c
105c_1
150a
150b
150c_2
150c_3
130a
130b
130c
130d
130e
135a
135b
135c
135d
135e
135f
140a
140b
140c
140d
140e
140f
140g
140h
145a
145b
145c
145d
145e
145f
145g
145h
145i

FIG. 13A

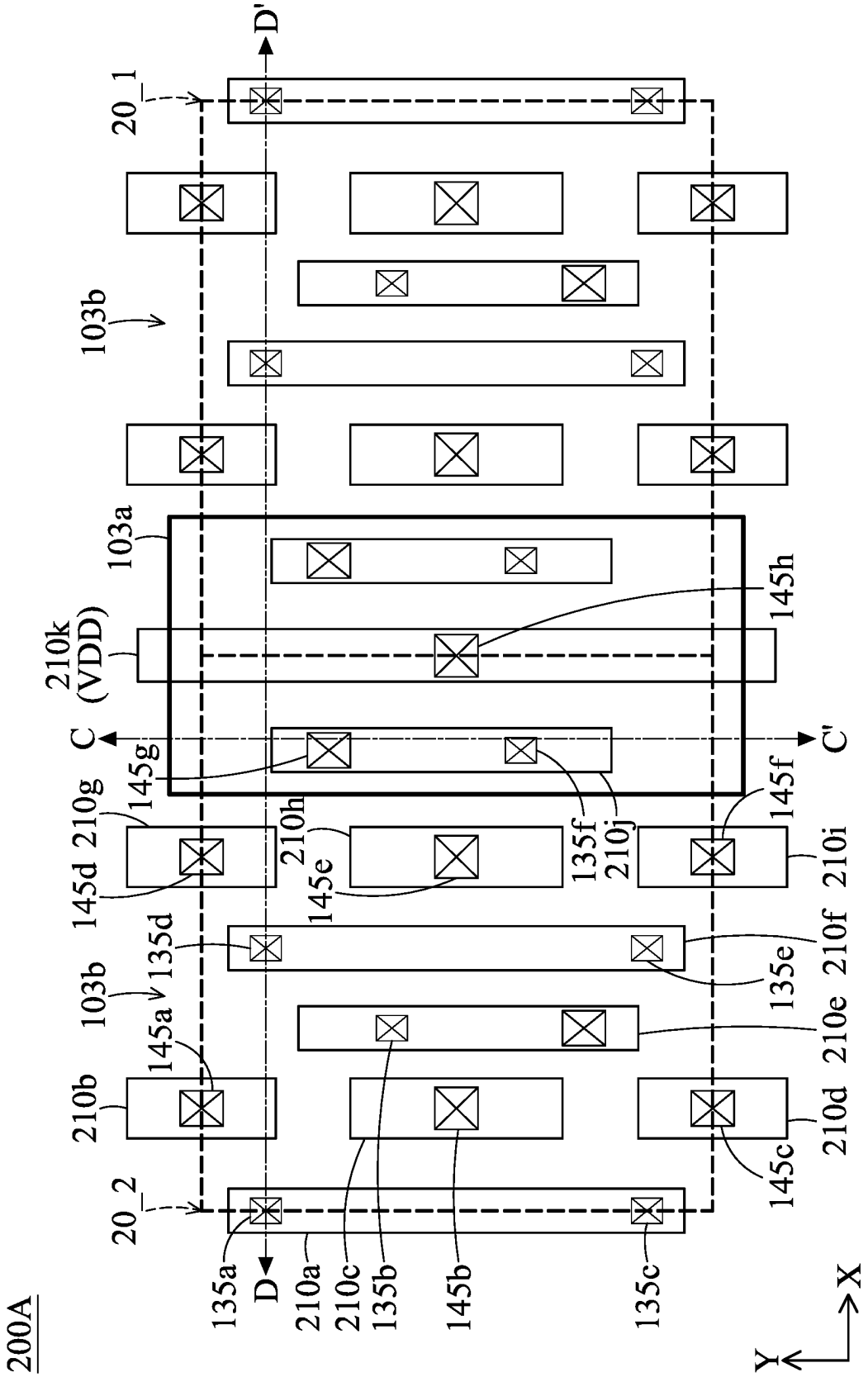
200A
20_1
20_2
D
D'
C
C'
X
Y
103a
103b
103b
210k
(VDD)
210b
210a
210c
210d
210e
210f
210g
210h
210i
210j
135a
135b
135c
135d
135e
135f
145a
145b
145c
145d
145e
145f
145g
145h

FIG. 13B

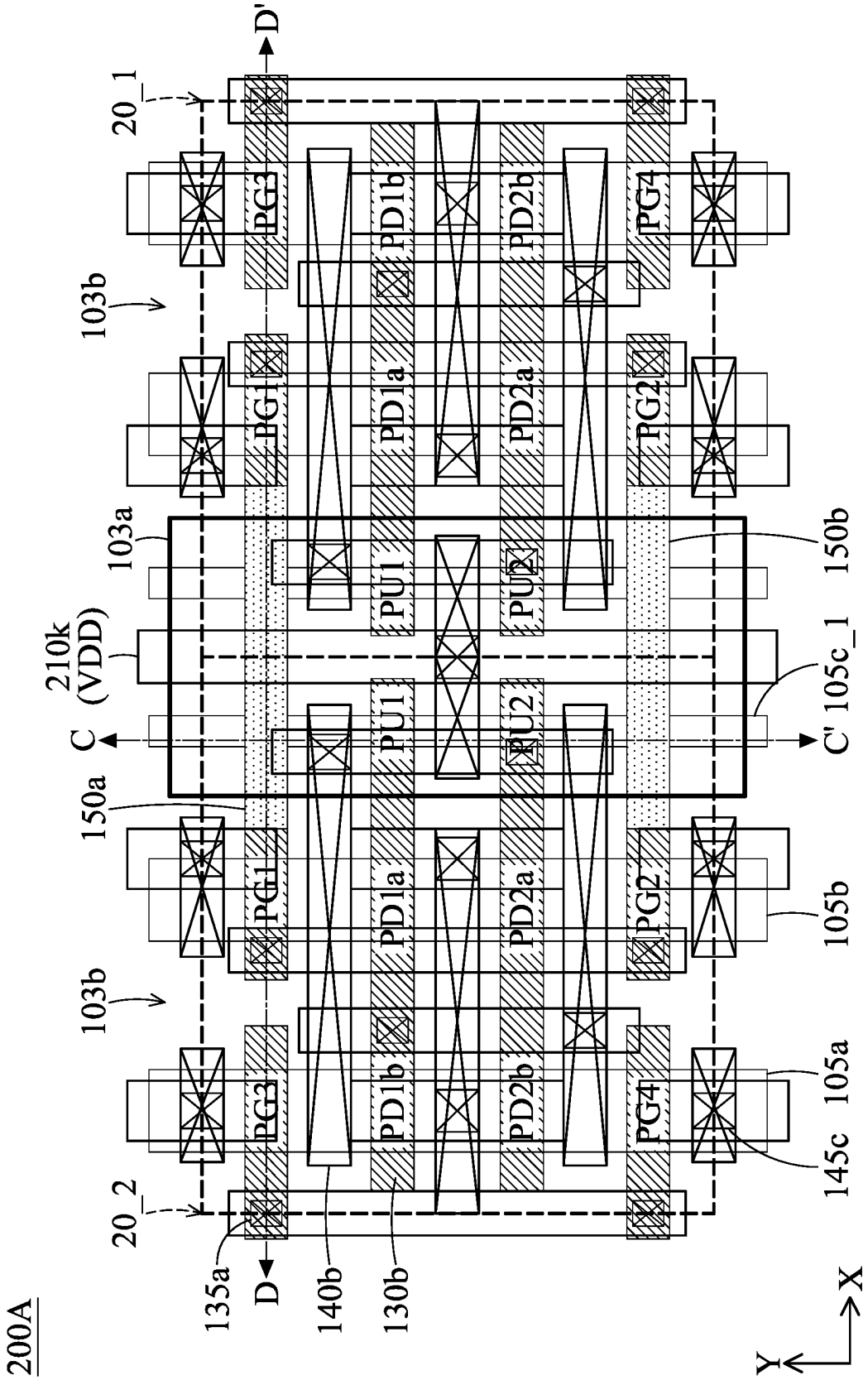
200A
20_1
20_2
D
D'
C
C'
103a
103b
210k
(VDD)
150a
150b
105a
105b
105c_1
145c
135a
140b
130b
PG1
PG2
PG3
PG4
PD1a
PD1b
PD2a
PD2b
PU1
PU2
X
Y

FIG. 13C

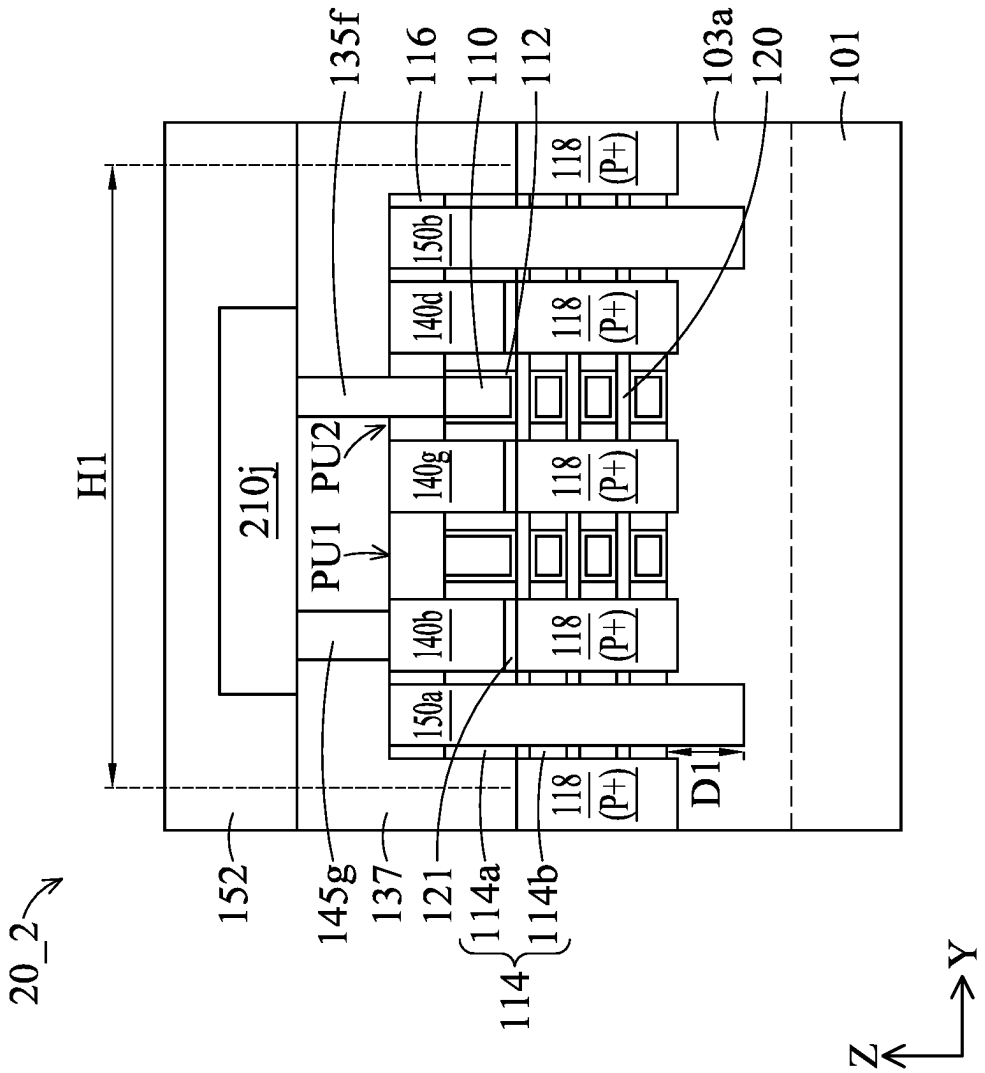
20_2
152
145g
137
121
114a
114b
114
135f
116
110
112
103a
120
101
H1
210j
PU1
PU2
150a
140b
140g
140d
150b
118
(P+)
D1
Z
Y

FIG. 14A

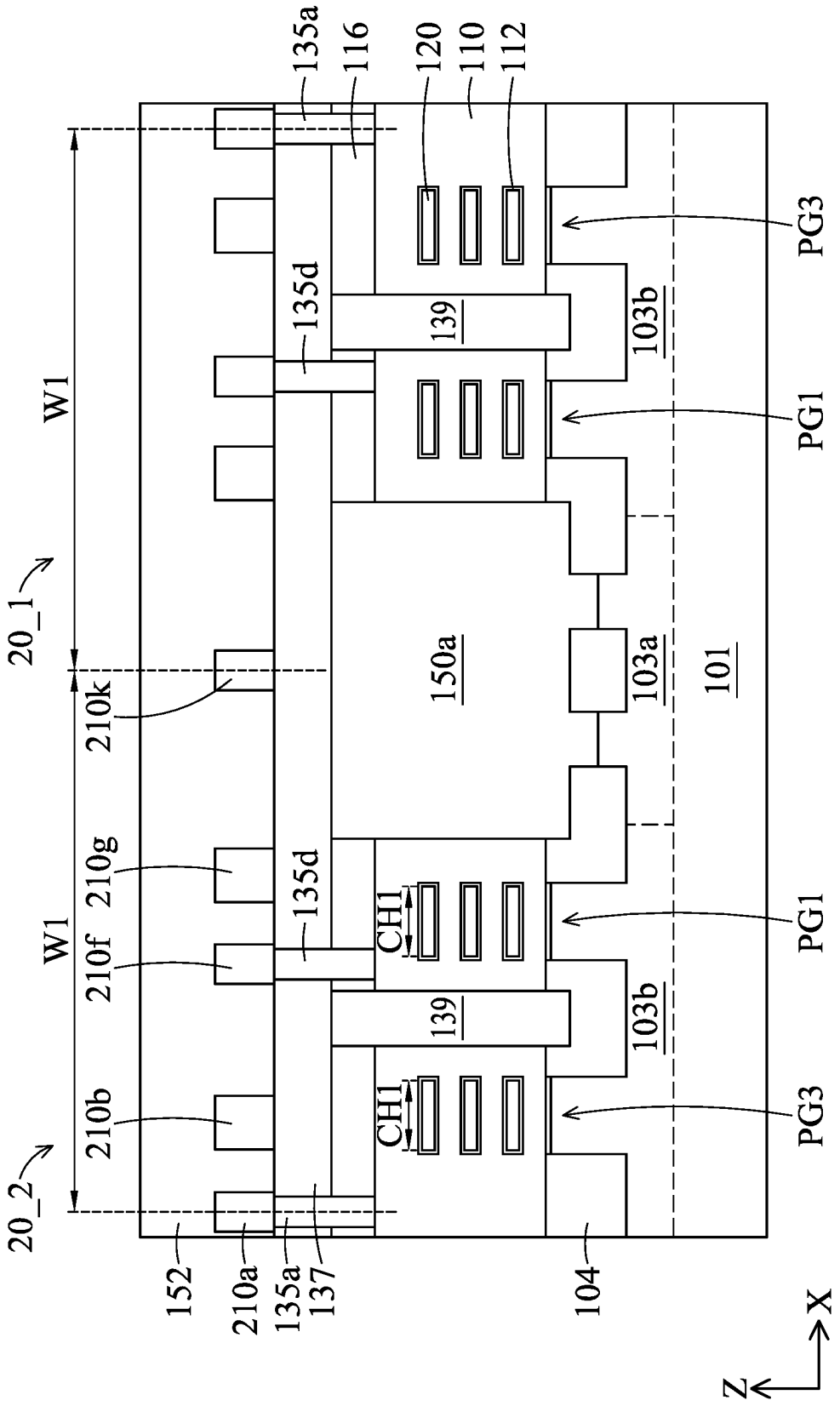
135a
116
120
110
112
PG3
135d
139
103b
PG1
W1
20_1
150a
103a
101
210k
210g
135d
CH1
PG1
W1
210f
139
103b
210b
CH1
PG3
20_2
152
210a
135a
137
104
Z
X

FIG. 14B

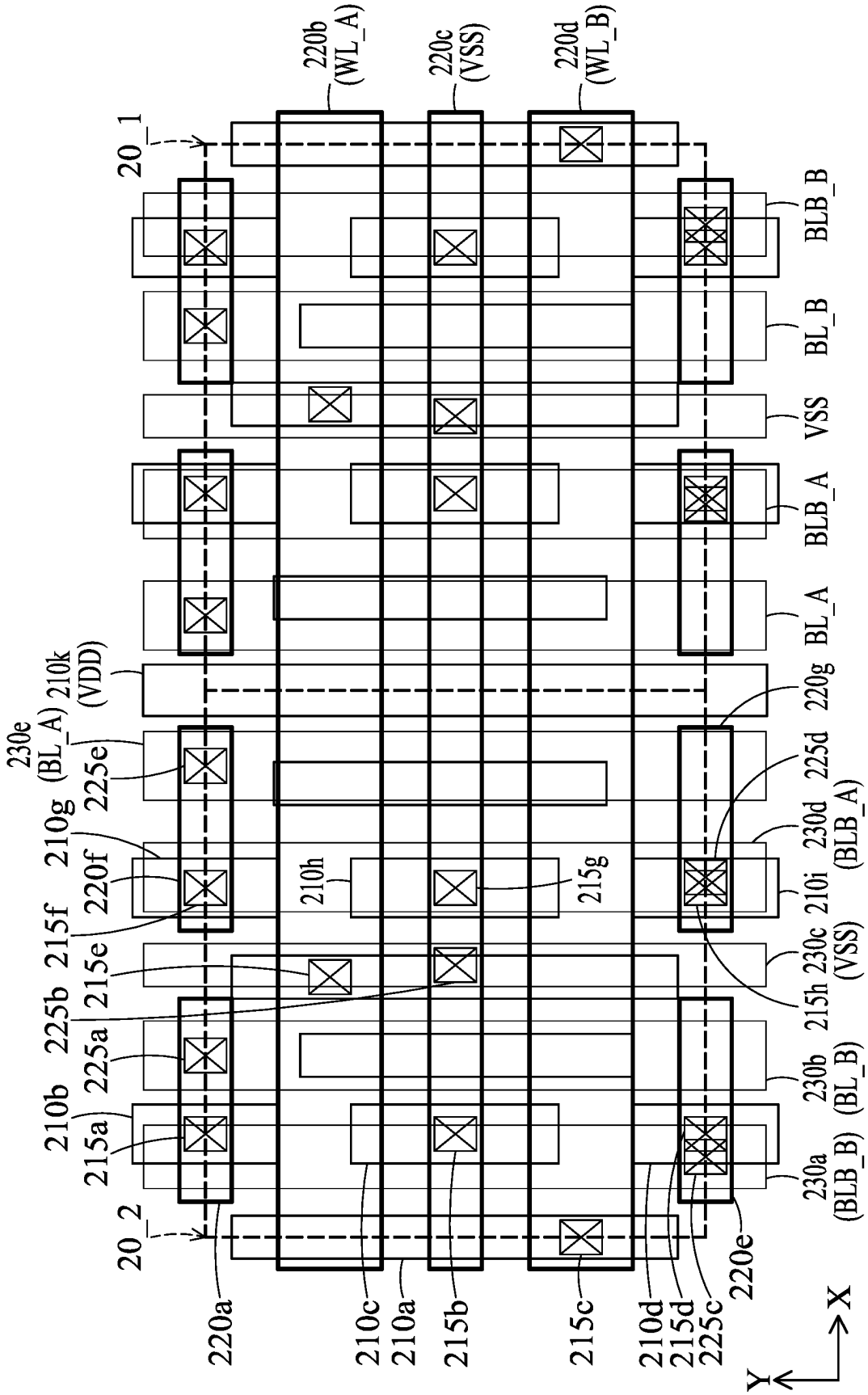
220b (WL_A)
220c (VSS)
220d (WL_B)
20_1
20_2
BLB_B
BL_B
VSS
BLB_A
BL_A
210k (VDD)
230e (BL_A)
225e
210g
220f
215f
225b
215e
225a
210b
215a
210h
215g
220g
225d
230d (BLB_A)
210i
230c (VSS)
215h
230b (BL_B)
230a (BLB_B)
220a
210c
210a
215b
215c
210d
215d
225c
220e
X
Y

FIG. 15

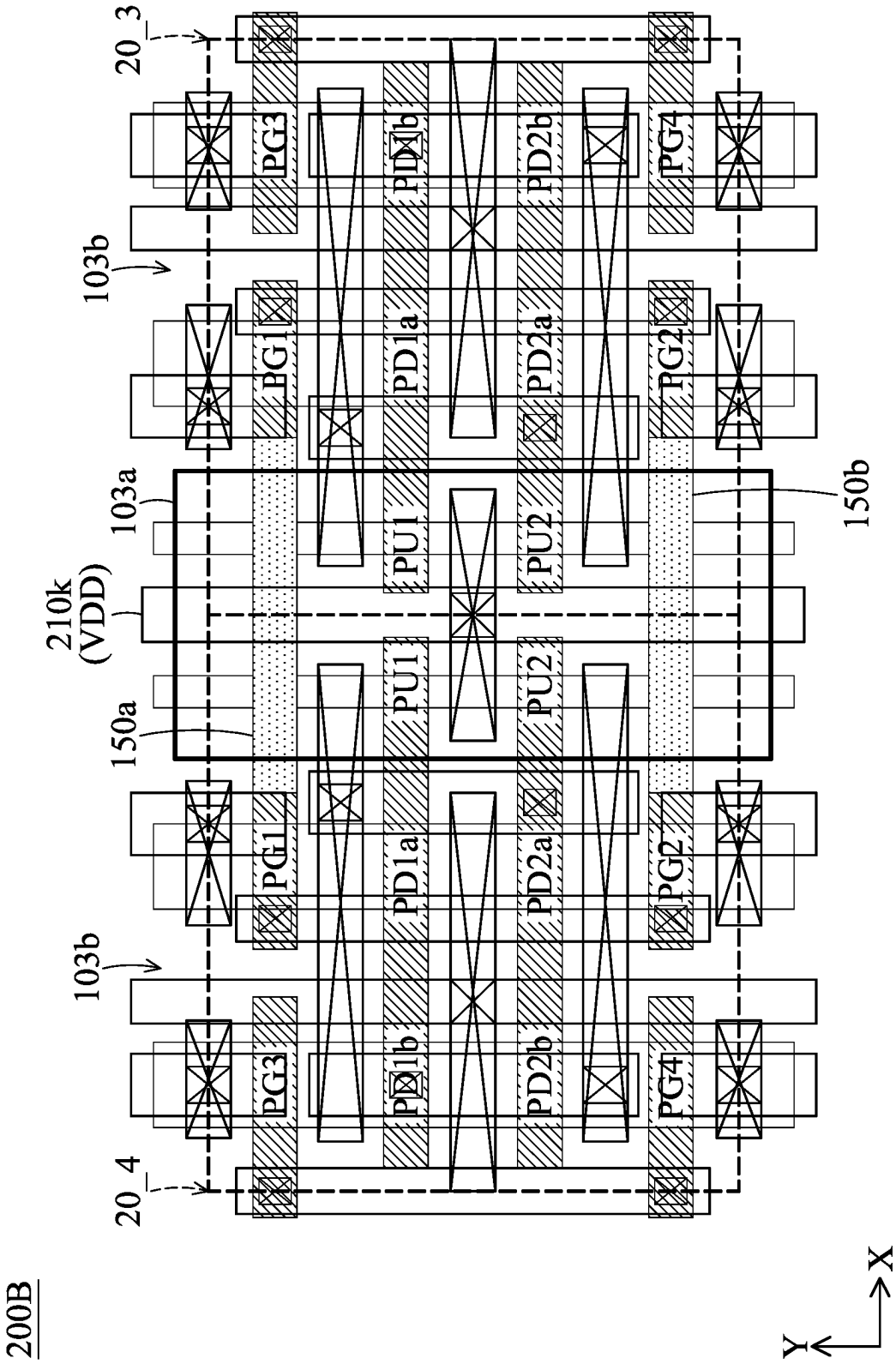
200B
20_3
20_4
103b
103a
210k
(VDD)
150a
150b
PG1
PG2
PG3
PG4
PD1a
PD1b
PD2a
PD2b
PU1
PU2
X
Y

FIG. 16

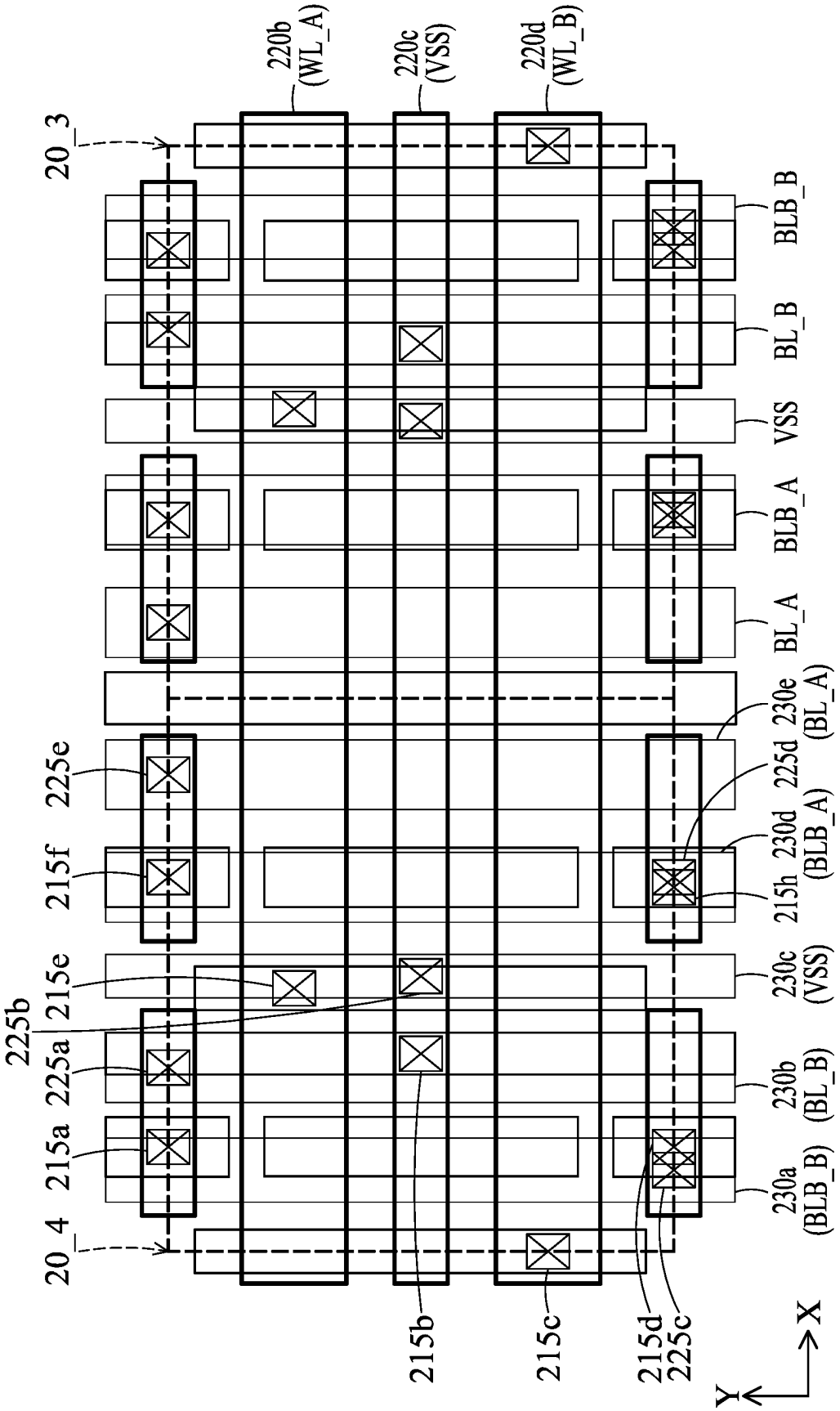
220b (WL_A)
220c (VSS)
220d (WL_B)
20_3
20_4
BLB_B
BL_B
VSS
BLB_A
BL_A
230e (BL_A)
225d
230d (BLB_A)
215h
230c (VSS)
230b (BL_B)
230a (BLB_B)
225e
215f
215e
225b
225a
215a
215b
215c
215d
225c
X
Y

FIG. 17

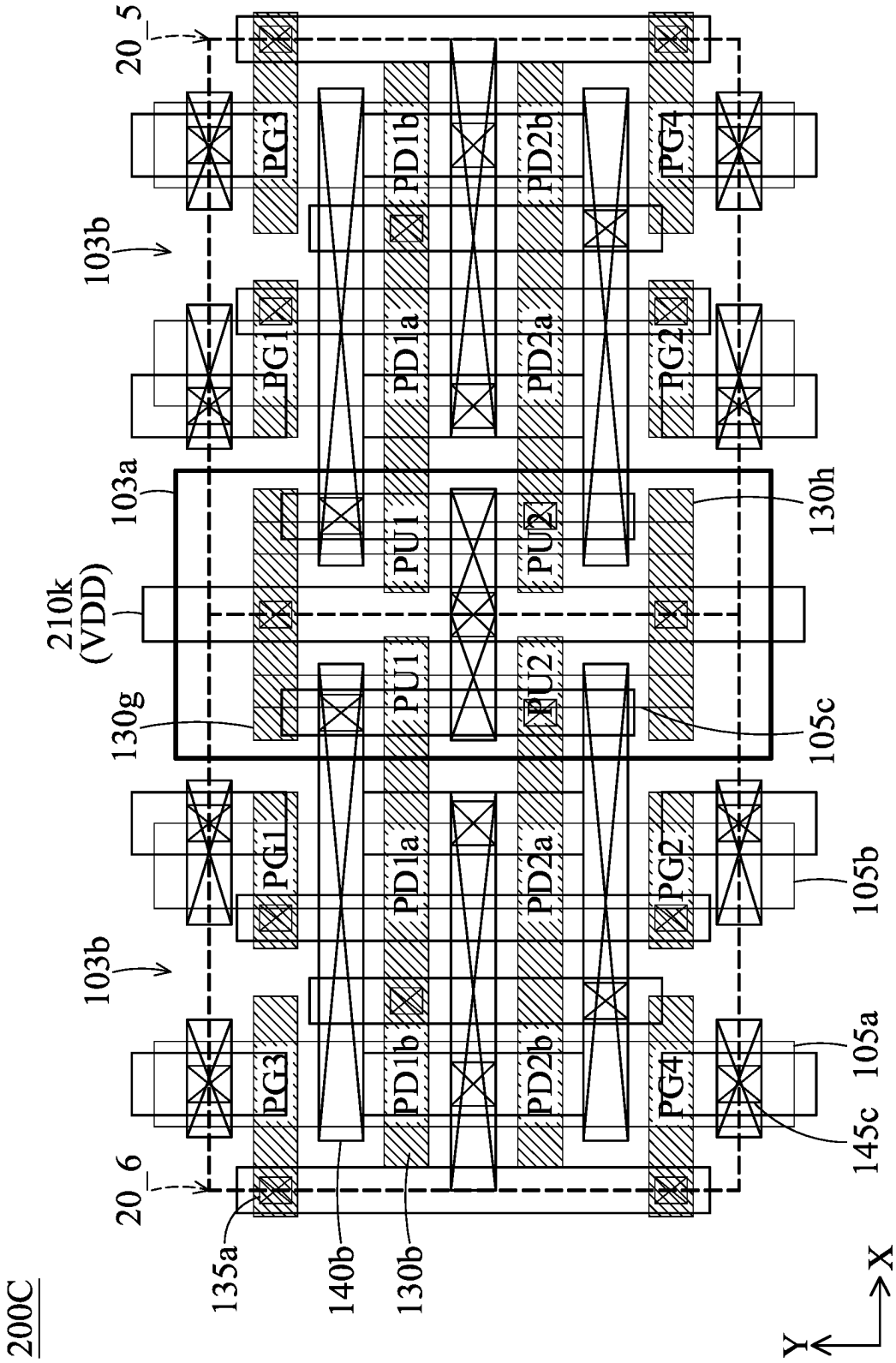
200C
20_5
20_6
103b
103a
210k
(VDD)
130g
PG1
PG2
PG3
PG4
PD1a
PD1b
PD2a
PD2b
PU1
PU2
130h
105c
105b
105a
145c
135a
140b
130b
X
Y

FIG. 18

SEMICONDUCTOR DEVICE

BACKGROUND

The semiconductor integrated circuit (IC) industry has experienced rapid growth. Technological advances in IC materials and design have produced generations of ICs where each generation has smaller and more complex circuits than the previous generation. However, these advances have increased the complexity of processing and manufacturing ICs and, for these advances to be realized, similar developments in IC processing and manufacturing are needed. In the course of IC evolution, functional density (i.e., the number of interconnected devices per chip area) has generally increased while geometric size (i.e., the smallest component that can be created using a fabrication process) has decreased.

Static Random Access Memory (SRAM) is commonly used in integrated circuits. SRAM cells have the advantageous feature of being able to hold data without the need to refresh. With the increasingly demanding requirements on the speed of integrated circuits, the read speed and write speed of SRAM cells have also become more important. With increased down-scaling of the already very small SRAM cells, however, such requests are difficult to achieve.

BRIEF DESCRIPTION OF THE DRAWINGS

Aspects of the present disclosure are best understood from the following detailed description when read with the accompanying figures. It should be noted that, in accordance with the standard practice in the industry, various nodes are not drawn to scale. In fact, the dimensions of the various nodes may be arbitrarily increased or reduced for clarity of discussion.

FIG. **1** shows a memory cell, in accordance with some embodiments of the disclosure.

FIG. **2** shows a perspective view of an exemplary GAA transistor.

FIG. **3** shows a cross sectional view of a semiconductor device, in accordance with some embodiments of the disclosure.

FIG. **4**A shows a top view of the memory cells in a semiconductor device, with depictions of the components under the first metal layer of FIG. **3**, in accordance with some embodiments of the disclosure.

FIG. **4**B shows a top view of the memory cells of FIG. **4**A, with depictions of the components in the first metal layer.

FIG. **4**C shows a top view of the memory cells of FIG. **4**A, with depictions of the components under and in the first metal layer.

FIG. **5**A shows a cross sectional view of the semiconductor device along a line A-A' in FIGS. **4**A through **4**C, in accordance with some embodiments of the disclosure.

FIG. **5**B shows a cross sectional view of the semiconductor device along a line B-B' in FIGS. **4**A through **4**C, in accordance with some embodiments of the disclosure.

FIG. **6** shows a top view of the semiconductor structure including the memory cells, with depictions of the components between the first and third metal layers, in accordance with some embodiments of the disclosure.

FIG. **7** shows a top view of the semiconductor structure including the memory cells, with depictions of the components between the first and third metal layers, in accordance with some embodiments of the disclosure.

FIG. **8** shows a top view of the semiconductor structure including the memory cells, with depictions of the components in and over the second metal layer, in accordance with some embodiments of the disclosure.

FIG. **9** shows a top view of the semiconductor structure including the memory cells, with depictions of the components in and over the second metal layer, in accordance with some embodiments of the disclosure.

FIG. **10**A shows a top view of the memory cells in a semiconductor device, with depictions of the components under the first metal layer of FIG. **3**, in accordance with some embodiments of the disclosure.

FIG. **10**B shows a top view of the memory cells of FIG. **10**A, with depictions of the components in the first metal layer.

FIG. **10**C shows a top view of the memory cells of FIG. **10**A, with depictions of the components under and in the first metal layer.

FIG. **11** shows a top view of the semiconductor structure including the memory cells, with depictions of the components between the first and third metal layers, in accordance with some embodiments of the disclosure.

FIG. **12** shows a memory cell, in accordance with some embodiments of the disclosure.

FIG. **13**A shows a top view of the memory cells in a semiconductor device, with depictions of the components under the first metal layer of FIG. **3**, in accordance with some embodiments of the disclosure.

FIG. **13**B shows a top view of the memory cells of FIG. **13**A, with depictions of the components in the first metal layer.

FIG. **13**C shows a top view of the memory cells of FIG. **13**A, with depictions of the components under and in the first metal layer.

FIG. **14**A shows a cross sectional view of the semiconductor device along a line C-C' in FIGS. **13**A through **13**C, in accordance with some embodiments of the disclosure.

FIG. **14**B shows a cross sectional view of the semiconductor device along a line D-D' in FIGS. **13**A through **13**C, in accordance with some embodiments of the disclosure.

FIG. **15** shows a top view of the semiconductor structure including the memory cells, with depictions of the components between the first and third metal layers, in accordance with some embodiments of the disclosure.

FIG. **16** shows a top view of the memory cells in a semiconductor device, with depictions of the components under and in the first metal layer.

FIG. **17** shows a top view of the semiconductor structure including the memory cells, with depictions of the components between the first and third metal layers, in accordance with some embodiments of the disclosure.

FIG. **18** shows a top view of the memory cells in a semiconductor device, with depictions of the components under and in the first metal layer.

DETAILED DESCRIPTION

The following disclosure provides many different embodiments, or examples, for implementing different nodes of the subject matter provided. Specific examples of components and arrangements are described below to simplify the present disclosure. These are, of course, merely examples and are not intended to be limiting. In some embodiments, the formation of a first node over or on a second node in the description that follows may include embodiments in which the first and the second nodes are formed in direct contact, and may also include embodiments in which additional nodes may be formed between the first and the second nodes, such that the first and the second

nodes may not be in direct contact. In addition, the present disclosure may repeat reference numerals and/or letters in the various examples. This repetition is for the purpose of simplicity and clarity and does not in itself dictate a relationship between the various embodiments and/or configurations discussed.

Some variations of the embodiments are described. Throughout the various views and illustrative embodiments, like reference numbers are used to designate like elements. It should be understood that additional operations can be provided before, during, and/or after a disclosed method, and some of the operations described can be replaced or eliminated for other embodiments of the method.

Furthermore, spatially relative terms, such as "beneath," "below," "lower," "above," "upper" and the like, may be used herein for ease of description to describe one element or feature's relationship to another element or feature as illustrated in the figures. The spatially relative terms are intended to encompass different orientations of the device in use or operation in addition to the orientation depicted in the figures. The apparatus may be otherwise oriented (rotated 90 degrees or at other orientations) and the spatially relative descriptors used herein may likewise be interpreted accordingly.

Various semiconductor structures of integrated circuits (ICs) are provided in accordance with various exemplary embodiments. Some variations of some embodiments are discussed. Throughout the various views and illustrative embodiments, like reference numbers are used to designate like elements.

In an IC, each memory includes multiple memory cells arranged in multiple rows and multiple columns of a memory array. In some embodiments, the memory cells have the same circuit configuration and the same semiconductor structure. In some embodiments, the memory cell may be a bit cell of SRAM.

FIG. **1** shows a memory cell **10**, in accordance with some embodiments of the disclosure. In this embodiment, the memory cell **10** is a dual-port (DP) SRAM bit cell. The dual-port SRAM device formed by the dual-port SRAM bit cells allows parallel operation, such as 1R (read), 1 W (write), or 2R (read) in one cycle, and therefore has higher bandwidth than a single port SRAM device.

The memory cell **10** includes a pair of cross-coupled inverters Inverter-**1** and Inverter-**2**, a first port (port-A), a second port (port-B), and two isolation transistors IS**1** and IS**2**. The inverters Inverter-**1** and Inverter-**2** are cross-coupled between the data nodes n**2** and n**1**, and form a latch circuit.

The first port includes the pass-gate transistors PG**1** and PG**2**, and the second port includes the pass-gate transistors PG**3** and PG**4**. The pass-gate transistor PG**1** is coupled between a bit line BL_A and the data node n**2**, and the pass-gate transistor PG**2** is coupled between a complementary bit line BLB_A and the data node n**1**, wherein the complementary bit line BLB_A is complementary to the bit line BL_A. The gates of the pass-gate transistors PG**1** and PG**2** are coupled to the word line WL_A. The pass-gate transistor PG**3** is coupled between a bit line BL_B and the data node n**2**, and the pass-gate transistor PG**4** is coupled between a complementary bit line BLB_B and the data node n**1**, wherein the complementary bit line BLB_B is complementary to the bit line BL_B. The gates of the pass-gate transistors PG**3** and PG**4** are coupled to the word line WL_B.

The drain of the isolation transistor IS**1** is coupled to the data node n**2**, and the source of the isolation transistor IS**1** is floating. Moreover, the drain of the isolation transistor IS**2** is coupled to the data node n**1**, and the source of the isolation transistor IS**2** is floating. The gates of the isolation transistors IS**1** and IS**2** are coupled to the supply voltage VDD. In such embodiment, the isolation transistors IS**1** and IS**2** are formed without extra cost or area for the memory cells.

The inverter Inverter-**1** includes a pull-up transistor PU**1** and the pull-down transistors PD**1***a* and PD**1***b*, and the pull-down transistors PD**1***a* and PD**1***b* are connected in parallel. The drain of the pull-up transistor PU**1** and the drains of the pull-down transistors PD**1***a* and PD**1***b* are coupled to the data node n**2** connecting the pass-gate transistors PG**1** and PG**3**. The gates of the pull-up transistor PU**1** and the pull-down transistors PD**1***a* and PD**1***b* are coupled to the data node n**1** connecting the pass-gate transistors PG**2** and PG**4**. Furthermore, the source of the pull-up transistor PU**1** is coupled to the power supply VDD, and the sources of the pull-down transistors PD**1***a* and PD**1***b* are coupled to a ground VSS.

The inverter Inverter-**2** includes a pull-up transistor PU**2** and the pull-down transistors PD**2***a* and PD**2***b*, and the pull-down transistors PD**2***a* and PD**2***b* are connected in parallel. The drain of the pull-up transistor PU**2** and the drains of the pull-down transistors PD**2***a* and PD**2***b* are coupled to the data node n**1** connecting the pass-gate transistors PG**2** and PG**4**. The gates of the pull-up transistor PU**2** and the pull-down transistors PD**2***a* and PD**2***b* are coupled to the data node n**2** connecting the pass-gate transistors PG**1** and PG**3**. Furthermore, the source of the pull-up transistor PU**2** is coupled to the power supply VDD, and the sources of the pull-down transistors PD**2***a* and PD**2***b* are coupled to a ground VSS.

The drain of the isolation transistor IS**1** is coupled to the data node n**2**, and the drain of the isolation transistor IS**2** is coupled to the data node n**1**. The sources of the isolation transistors IS**1** and IS**2** are depicted as floating. In some embodiments, the sources of the isolation transistors IS**1** and IS**2** may be coupled to respective isolation transistors IS**1**/IS**2** in adjacent memory cells **10**. The gates of the isolation transistors IS**1** and IS**2** are coupled to the power supply VDD, thus the isolation transistors IS**1** and IS**2** are turned off by the power supply VDD.

In the memory cell **10**, the pass-gate transistors PG**1**, PG**2**, PG**3** and PG**4** and the pull-down transistors PD**1***a*, PD**1***b*, PD**2***a* and PD**2***b* are N-type transistors, and the pull-up transistors PU**1** and PU**2** and the isolation transistors IS**1** and IS**2** are P-type transistors. The P-type transistors and the N-type transistors are formed by the MOSFET devices including bulk planar MOSFETs, or bulk fin-structure (3D) MOSFETs, or bulk multiple-fin MOSFETs in one device, or SOI planar MOSFETs, or SOI fin-structure (3D) MOSFETs, or SOI multiple-fin MOSFETs in one device, or nano-wire gate all around (GAA) MOSFETs, or nano-sheet GAA MOSFETs, or vertically stacked multiple channels (sheets) GAA MOSFETs, or combination thereof.

The nanostructure transistor (e.g. nanosheet transistor, nanowire transistor, multi-bridge channel, nano-ribbon FET, GAA transistor structures may be patterned by any suitable method. For example, the structures may be patterned using one or more photolithography processes, including double-patterning or multi-patterning processes. Generally, double-patterning or multi-patterning processes combine photolithography and self-aligned processes, allowing patterns to be created that have, for example, pitches smaller than what is otherwise obtainable using a single, direct photolithography process. For example, in one embodiment, a sacrificial layer is formed over a substrate and patterned using a photolithography process. Spacers are formed alongside the

patterned sacrificial layer using a self-aligned process. The sacrificial layer is then removed, and the remaining spacers may then be used to pattern the GAA structure.

FIG. **2** shows a perspective view of an exemplary GAA transistor. The GAA transistor includes a substrate **101**. The substrate **101** may contains a semiconductor material, such as bulk silicon (Si). In some other embodiments, the substrate **101** may include other semiconductors such as germanium (Ge), silicon germanium (SiGe), or a III-V semiconductor material. Example III-V semiconductor materials may include gallium arsenide (GaAs), indium phosphide (InP), gallium phosphide (GaP), gallium nitride (GaN), gallium arsenide phosphide (GaAsP), aluminum indium arsenide (AlInAs), aluminum gallium arsenide (AlGaAs), gallium indium phosphide (GaInP), and indium gallium arsenide (InGaAs). The substrate **101** may also include an insulating layer, such as a silicon oxide layer, to have a silicon-on-insulator (SOI) structure or a germanium-on-insulator (GOI) structure. In some embodiments, after the resultant GAA transistor is formed, the substrate **101** may be removed by a suitable process (e.g., a chemical mechanical polishing (CMP) process) for forming back-side interconnections.

The GAA transistor also includes one or more nanostructures **120** (dash lines) extending in the Y-direction and vertically arranged (or stacked) in a Z-direction. More specifically, the nanostructures **120** are spaced from each other in the Z-direction. In some embodiments, the nanostructures **120** may also be referred to as channels, channel layers, nanosheets, or nanowires. The nanostructures **120** may include a semiconductor material, such as silicon, germanium, silicon carbide, silicon phosphide, gallium arsenide, gallium phosphide, indium phosphide, indium arsenide, and/or indium antimonide, silicon germanium (SiGe), SiPC, GaAsP, AlInAs, AlGaAs, GaInAs, GaInP, and/or GaInAsP. In some embodiments, the nanostructures **120** include silicon for N-type GAA transistors. In other embodiments, the nanostructures **120** include silicon germanium for P-type GAA transistors. In some embodiments, the nanostructures **120** are all made of silicon, and the type of GAA transistors depend on work function metal layer wrapping around the nanostructures **120**.

The GAA transistor further includes a gate structure including a gate electrode **110** and a gate dielectric layer **112**. The gate dielectric layer **112** wraps around the nanostructures **120** and the gate electrode **110** wraps around the gate dielectric layer **112** (not shown). The gate electrode **110** may include polysilicon or work function metal. The work function metal includes TiN, TaN, TiAl, TiAlN, TaAl, TaAlN, TaAlC, TaCN, WNC, Co, Ni, Pt, W, combinations thereof, or other suitable material.

In some embodiments, the gate electrode **110** may include a capping layer, a barrier layer, an n-type work function metal layer, a p-type work function metal layer, and a fill material (not shown). In some embodiments, the P-type transistors and the N-type transistors are formed by the same work function material. In some embodiments, the P-type transistors and the N-type transistors are made of different work function materials.

The gate dielectric layer **112** may include dielectric materials, such as silicon oxide, silicon nitride, silicon oxynitride, dielectric material(s) with high dielectric constant (high-k), or a combination thereof. Examples of high-k dielectric materials include TiO_2, HfZrO, Ta_2O_3, $HfSiO_4$, ZrO_2, $ZrSiO_2$, LaO, AlO, ZrO, TiO, Ta_2O_5, Y_2O_3, $SrTiO_3$ (STO), $BaTiO_3$ (BTO), BaZrO, HfLaO, HfSiO, LaSiO, AlSiO, HfTaO, HfTiO, $(Ba,Sr)TiO_3$ (BST), Al_2O_3, Si_3N_4, oxynitrides (SiON), combinations thereof, or other suitable material.

The gate spacers **114** are on sidewalls of the gate dielectric layer **112** and over the nanostructures **120** (not shown). The gate spacers **114** may include multiple dielectric materials and be selected from a group consisting of silicon nitride (Si_3N_4), silicon oxide (SiO_2), silicon carbide (SiC), silicon oxycarbide (SiOC), silicon oxynitride (SiON), silicon oxycarbon nitride (SiOCN), carbon doped oxide, nitrogen doped oxide, porous oxide, air gap, or a combination thereof. In some embodiments, the gate spacers **114** may include a single layer or a multi-layer structure.

The gate top dielectric layer **116** is over the gate dielectric layer **112**, the gate electrode **110**, and the nanostructures **120**. The gate top dielectric layer **116** is used for contact etch protection layer. The material of gate top dielectric layer **116** is selected from a group consisting of oxide, SiOC, SiON, SiOCN, nitride base dielectric, metal oxide dielectric, Hf oxide (HfO_2), Ta oxide (Ta_2O_5), Ti oxide (TiO_2), Zr oxide (ZrO_2), Al oxide (Al_2O_3), Y oxide (Y_2O_3), combinations thereof, or other suitable material. The thickness of the gate top dielectric layer **116** about 2 nm to about 60 nm.

The GAA transistor further includes epitaxially-grown materials **118**. As shown in FIG. **2**, two epitaxially-grown materials **118** are on opposite sides of the gate structure. The epitaxially-grown materials **118** serve as the source/drain features of the GAA transistor. Therefore, the epitaxially-grown materials **118** may also be referred to as source/drain, source/drain features, or source/drain nodes. In some embodiments, for an N-type GAA transistor, the epitaxially-grown materials **118** may include SiP, SiC, SiPC, SiAs, Si, or a combination thereof. In some embodiments, for a P-type GAA transistor, the epitaxially-grown materials **118** may include SiGe, SiGeC, Ge, Si, a boron-doped SiGe, boron and carbon doped SiGe, or a combination thereof.

The nanostructures **120** (dash lines) extends in the Y-direction to connect two epitaxially-grown materials **118**. Such the nanostructures **120** and the epitaxially-grown materials **118** connected continuously with each other may be collectively referred to as an active area.

Isolation feature **104** is over the substrate **101** and under the gate dielectric layer **112**, the gate electrode **110**, and the gate spacers **114**. The isolation feature **104** is used for isolating the GAA transistor from other devices. In some embodiments, the isolation feature **104** may include different structures, such as shallow trench isolation (STI) structure, deep trench isolation (DTI) structure. Therefore, the isolation feature **104** is also referred as to as a STI feature or DTI feature.

FIG. **3** shows a cross sectional view of a semiconductor device, in accordance with some embodiments of the disclosure. In the semiconductor device, one or more memory cells **10** as illustrated in the disclosure are formed. In such embodiment, the memory cells **10** includes the FinFET transistors. Furthermore, some components of the semiconductor device are not depicted for clarity of FIG. **3**.

The semiconductor device includes a well region **103** over the substrate **101**. In some embodiments, the well region **103** is a P-type well region, and the material of the P-type well region includes Si with Boron (B) doping. In some embodiments, the well region **103** is an N-type well region, and the material of the N-type well region includes Si with Phosphorus (P) doping. The fins **115** form the active regions over the well region **103**, and the gate structures **130** are formed over the fins **115**.

The gate vias VG are formed over and connected to the gate structures **130** (e.g., the gate structures). Isolation feature **104** is over the well region **103** and under the gate structure **130**. The isolation feature **104** is used for isolating the fin **115** of a transistor from other devices. In some embodiments, the isolation feature **104** may include different structures, such as shallow trench isolation (STI) structure, deep trench isolation (DTI) structure. Therefore, the isolation feature **104** is also referred as to as a STI feature or DTI feature.

The semiconductor device further includes the vias V**1**, V**2**, and V**3** and the metal lines M**1**, M**2**, M**3** and M**4** in an inter-metal dielectric (IMD). In some embodiments, the IMD may be multilayer structure, such as one or more dielectric layers. The metal lines M**1**, M**2**, M**3** and M**4** are formed in respective conductive layers, which are also referred to as metal layers. Moreover, the vias VG, V**0** (not shown), V**1**, V**2**, and V**3** are formed in respective via layers over the gate structures **130**.

In FIG. **3**, the conductive layers of the semiconductor device include a first metal layer having first conductive features (e.g., the metal lines M**1**), a second metal layer having second conductive features (e.g., the metal lines M**2**), a third metal layer having third conductive features (e.g., the metal lines M**3**), and a fourth metal layer having fourth conductive features (e.g., the metal lines M**4**). The first metal layer is the lowest metal layer.

The via layers of semiconductor device include a base via layer having the vias V**0** (not shown) and the vias VG, a first via layer having the vias V**1**, a second via layer having the vias V**2**, and a third via layer having the vias V**3**. The vias V**0** and the vias VG are arranged to connect at least some of the conductive structures (contacts) and the gate structures **130** with corresponding first metal lines M**1**. The vias V**1** are arranged to connect at least some first metal lines M**1** with the corresponding second metal lines M**2**. The vias V**2** are arranged to connect at least some second metal lines M**2** with the corresponding third metal lines M**3**. The vias V**3** are arranged to connect at least some third metal lines M**3** with the corresponding fourth metal lines M**4**.

FIG. **3** is used as to demonstrate the spatial relationship among various metal layers and via layers. In some embodiments, the numbers of conductive features at various layers are not limited to the example depicted in FIG. **3**. In some embodiments, there are one or more metal layers and one or more via layers over the fourth metal lines M**4**.

FIG. **4**A shows a top view of the memory cells **10_1** and **10_2** in a semiconductor device **100**A, with depictions of the components under the first metal layer of FIG. **3**, in accordance with some embodiments of the disclosure. FIG. **4**B shows a top view of the memory cells **10_1** and **10_2** of FIG. **4**A, with depictions of the components in the first metal layer. FIG. **4**C shows a top view of the memory cells **10_1** and **10_2** of FIG. **4**A, with depictions of the components under and in the first metal layer.

In FIGS. **4**A through **4**C, the same components in the memory cells **10_1** and **10_2** are given the same reference numbers, and the detailed description thereof is thus omitted. Furthermore, the memory cells **10_1** and **10_2** are arranged in the same row of the memory array, and the memory cell **10_1** is in contact with the adjacent memory cell **10_2**.

The memory cells **10_1** and **10_2** are an implementation of the dual-port memory cell **10** depicted in FIG. **1**. That is, each of the memory cells **10_1** and **10_2** is a 12T SRAM cell with twelve (12) transistors, including two pass-gate transistors PG**1** and PG**2** of the first port, two pass-gate transistors PG**3** and PG**4** of the second port, two pull-up transistors PU**1** and PU**2**, fourth pull-down transistors PD**1***a*, PD**1***b*, and PD**2***a* and PD**2***b*, and two isolation transistors IS**1** and IS**2**. In such embodiment, the transistors in the memory cells **10_1** and **10_2** are gate-all-around field effect transistors (GAA FETs). The boundaries of the memory cells **10_1** and **10_2** are indicated by dashed lines.

The memory cells **10_1** and **10_2** are joined along a center line extending along the Y-direction. In other words, the memory cells **10_1** and **10_2** are arranged in mirror symmetry along the Y-direction. It is noted that the illustration of the cells **10_1** and **10_2** is for the purposes of demonstrating the highly symmetric nature of the SRAM cells of the present disclosure and how two adjacent SRAM cells share the same N-type well region **103***a*. Thus, cell stability and device matching are improved, so as to increase the chip speed and achieve lower power supply for the memory device.

Each of the SRAM cells **10_1** and **10_2** includes a cell height H**1** along the Y direction and a cell width W**1** along the X direction. In such embodiment, the cell height H**1** spans over a total of 4 gate structures and is measured at about 4 gate pitches. Each gate pitch includes a gate length along the Y direction and a gate spacing between two adjacent gate structures along the Y direction.

In each of the memory cells **10_1** and **10_2**, the 12 transistors are formed upon 3 continuous active regions (or oxide definition (OD) regions). Furthermore, each of the memory cells **10_1** and **10_2** includes a substrate (not labeled) having the P-type well region **103***b* and the N-type well region **103***a*. Each of the memory cells **10_1** and **10_2** includes the active regions **105***a*, **105***b* and **105***c* extending along the Y direction. The active regions **105***a* and **105***b* are formed in the P-type well region **103***b*, and the active region **105***c* is formed in the N-type well region **103***a*. In some embodiments, the active regions **105***a*, **105***b* and **105***c* are formed by single fin or multiple fins.

As described above, the memory cells **10_1** and **10_2** have a symmetrical configuration. To simplify the description, only the memory cell **10_2** is used for description.

In the memory cell **10_2**, the gate structure **130***a* engages the active region **105***a* to form the pass-gate transistor PG**3**. The gate structure **130***b* engages the active region **105***a* to form the pull-down transistor PD**1***b*. The gate structure **130***c* engages the active region **105***a* to form the pull-down transistor PD**2***b*. The gate structure **130***d* engages the active region **105***a* to form the pass-gate transistor PG**4**. The gate structures **130***a* and **130***d* are electrically connected to the metal line **210***a* through the gate vias **135***a* and **135***c*, respectively.

Furthermore, the gate structure **130***e* engages the active region **105***b* to form the pass-gate transistor PG**1**. The gate structure **130***b* engages the active region **105***b* to form the pull-down transistor PD**1***a*. The gate structure **130***c* engages the active region **105***b* to form the pull-down transistor PD**2***a*. The gate structure **130***f* engages the active region **105***b* to form the pass-gate transistor PG**2**. The gate structures **130***e* and **130***f* are electrically connected to the metal line **210***f* through the gate vias **135***d* and **135***e*, respectively.

Moreover, the gate structure **130***g* engages the active region **105***c* to form the isolation transistor IS**1**. The gate structure **130***b* engages the active region **105***c* to form the pull-up transistor PU**1**. The gate structure **130***c* engages the active region **105***c* to form the pull-up transistor PU**2**. The gate structure **130***h* engages the active region **105***c* to form the isolation transistor IS**2**. The gate structures **130***g* and

130*h* are electrically connected to the metal line 210*k* through the gate vias 135*g* and 135*h*, respectively.

In the semiconductor device 100A, the gate structures 130*g* and 130*h* are shared by the memory cells 10_1 and 10_2. Furthermore, in each of the memory cells 10_1 and 10_2, the pull-down transistors PD1*a* and PD1*b* and the pull-up transistor PU1 share the gate structure 130*b*, and the pull-down transistors PD2*a* and PD2*b* and the pull-up transistor PU2 share the gate structure 130*c*. Furthermore, the gate structure 130*b* corresponds to the data node n2, and the gate structure 130*c* corresponds to the data node n1.

The pull-up transistors PU1 and PU2 are formed in the continuous active region 105*c*, so as to improve device mismatch and Ion (turned-on current) boost and avoid length of diffusion (LOD) effect for the pull-up transistors PU1 and PU2. Compared with the discontinuous active region, the semiconductor device 100A has lower N-Well resistance for soft error rate (SER) and latch up performance improvement. Thus, N-well strapping frequency of the semiconductor device 100A can extend to decrease the memory array area.

In the memory cells 10_1 and 10_2, the pull-down transistors PD1*b* and PD2*b* are disposed between the pass-gate transistors PG3 and PG4 on the P-type well region 103*b*, and the pull-down transistors PD1*a* and PD2*a* are disposed between the pass-gate transistors PG1 and PG2 on the P-type well region 103*b*. Furthermore, the pull-up transistors PU1 and PU2 are disposed between the isolation transistors IS1 and IS2 on the N-type well region 103*a*.

In the memory cell 10_2, the source/drain contacts 140*a* through 140*h* and the gate structures 130*a* through 130*h* extend in the X-direction. The metal lines 210*a* through 210*k* are formed in the first metal layer and extend in the Y direction. The source/drain contacts 140*a* through 140*h* are configured to connect the source/drain regions of the transistors. Source/drain region(s) may refer to a source or a drain, individually or collectively dependent upon the context.

In the memory cell 10_2, the source/drain contacts 140*a* and 140*b* overlap the active region 105*a* and correspond to source and drain of the pass-gate transistor PG3. The source/drain contact 140*a* is electrically connected to the metal line 210*b* through the via 145*a*. Furthermore, the source/drain contacts 140*b* and 140*c* overlap the active region 105*a* and correspond to the drain and source of the pull-down transistor PD1*b*. The source/drain contact 140*b* is electrically connected to the gate structure 130*c* through the via 145*g*, the metal line 210*j*, and the gate via 135*f* in sequence. The metal line 210*j* is a local connection line configured to form an electrical connection between the source/drain contact 140*b* and the gate structure 130*c*. The source/drain contact 140*c* is electrically connected to the metal lines 210*c* and 210*h* through the via 145*b* and 145*e*, respectively. The source/drain contacts 140*d* and 140*c* overlap the active region 105*a* and correspond to the drain and source of the pull-down transistor PD2*b*. The source/drain contact 140*d* is electrically connected to the gate structure 130*b* through the via 145*i*, the metal line 210*e*, and the gate via 135*b* in sequence. The metal line 210*e* is a local connection line configured to form an electrical connection between the source/drain contact 140*d* and the gate structure 130*b*. The source/drain contacts 140*d* and 140*e* overlap the active region 105*a* and correspond to source and drain of the pass-gate transistor PG4. The source/drain contact 140*e* is electrically connected to the metal line 210*d* through the via 145*c*.

The source/drain contacts 140*f* and 140*b* overlap the active region 105*b* and correspond to source and drain of the pass-gate transistor PG1. The source/drain contact 140*f* is electrically connected to the metal line 210*g* through the via 145*d*. Furthermore, the source/drain contacts 140*b* and 140*c* overlap the active region 105*b* and correspond to the drain and source of the pull-down transistor PD1*a*. The source/drain contacts 140*d* and 140*c* overlap the active region 105*a* and correspond to the drain and source of the pull-down transistor PD2*a*. The source/drain contacts 140*d* and 140*h* overlap the active region 105*b* and correspond to source and drain of the pass-gate transistor PG2. The source/drain contact 140*h* is electrically connected to the metal line 210*i* through the via 145*f*.

The source/drain contact 140*b* overlaps the active region 105*c* and correspond to drain of the isolation transistor IS1. Furthermore, the source/drain contacts 140*b* and 140*g* overlap the active region 105*c* and correspond to the drain and source of the pull-up transistor PU1. The source/drain contact 140*g* is electrically connected to the metal line 210*k* through the via 145*h*. The source/drain contacts 140*d* and 140*g* overlap the active region 105*c* and correspond to the drain and source of the pull-up transistor PU2. The source/drain contact 140*d* overlaps the active region 105*c* and correspond to drain of the isolation transistor IS2.

In the semiconductor device 100A, the source/drain contact 140*b* is a longer contact electrically connected the drains of the pass-gate transistors PG1 and PG3, the pull-down transistors PD1*a* and PD1*b*, the pull-up transistor PU1 and the isolation transistor IS1. Similarly, the source/drain contact 140*d* is a longer contact electrically connected the drains of the pass-gate transistors PG2 and PG4, the pull-down transistors PD2*a* and PD2*b*, the pull-up transistor PU2 and the isolation transistor IS2.

As described above, the memory cell 10_1 has a configuration mirrored-identical to the memory cell 10_2. Thus, the configuration of the metal lines and the source/drain contacts of the twelve transistors in the memory cell 10_1 is similar to that of the twelve transistors in the memory cell 10_2.

The metal line 210*k* functions as the VDD line (or VDD conductor) for the memory cells 10_1 and 10_2. In this embodiment, the VDD line is shared by the memory cells 10_1 and 10_2. For example, the metal line 210*k* is disposed at the right boundary of the memory cell 10_2. Moreover, the memory cells arranged in the same columns as memory cells 10_1 and 10_2 share the same VDD line through the metal line 210*k*.

The metal line 210*d* functions as a landing pad (or a landing line) of the complementary bit line BLB_B for the memory cell 10_2, and the metal line 210*i* functions as a landing pad of the complementary bit line BLB_A for the memory cell 10_2. The landing pads of the complementary bit lines BLB_A and BLB_B are shared by the memory cell adjacent to the memory cell 10_2 in the same column. For example, the metal lines 210*d* and 210*i* are disposed at the bottom boundary of the memory cell 10_2. The metal line 210*b* functions as a landing pad of the bit line BL_B for the memory cell 10_2, and the metal line 210*g* functions as a landing pad of the bit line BL_A for the memory cell 10_2. The landing pads of the bit lines BL_A and BL_B are shared by the memory cell adjacent to the memory cell 10_2 in the same column. For example, the metal lines 210*b* and 210*g* are disposed at the top boundary of the memory cell 10_2.

The metal line 210*f* functions as a landing pad of the word line WL_A for the memory cell 10_2, and the metal line 210*a* functions as a landing pad of the word line WL_B for the memory cell 10_2. The landing pad of the word line

WL_B is shared by the memory cell adjacent to the memory cell **10_2** in the same row. For example, the metal line **210***a* is disposed at the left boundary of the memory cell **10_2**. The metal lines **210***c* and **210***h* function as the landing pads of the VSS line for the memory cell **10_2**.

In the first metal layer, the metal lines **210***b*, **210***c* and **210***d* are arranged on a first straight line along the Y direction, and the metal line **210***e* is arranged on a second straight line along the Y direction. The metal line **210***f* is arranged on a third straight line along the Y direction. The metal lines **210***g*, **210***h* and **210***i* are arranged on a fourth straight line along the Y direction. The metal line **210***j* is arranged on a fifth straight line along the Y direction. In such embodiments, the first through fifth straight lines are arranged between the left boundary and the right boundary of the memory cell **10_2** in sequence. Furthermore, only the fifth straight line is disposed over the N-type well region **103***a*.

The memory cells **10_1** and **10_2** have a rectangular shape with a cell width W**1** measurable along the X direction and a cell height H**1** measurable along the Y direction. In some embodiments, a memory macro is formed but repeating and abutting memory cells having a configuration identical or mirrored-identical to the memory cells **10_1** and **10_2**. Moreover, the cell width W**1** is also referred to as a cell pitch along the X direction, and the cell height H**1** is also referred to as a cell pitch along the Y direction.

FIG. **5**A shows a cross sectional view of the semiconductor device **100**A along a line A-A' in FIGS. **4**A through **4**C, in accordance with some embodiments of the disclosure. As described above, the memory cell **10_2** has a cell height (or cell pitch) H**1** measurable in the Y-direction. In FIG. **5**A, the cross sectional view of the pull-up transistors PU**1** and PU**2** and the isolation transistors IS**1** and IS**2** are illustrated, and the pull-up transistors PU**1** and PU**2** and the isolation transistors IS**1** and IS**2** are P-type GAA FETs.

FIG. **5**B shows a cross sectional view of the semiconductor device **100**A along a line B-B' in FIGS. **4**A through **4**C, in accordance with some embodiments of the disclosure. In FIG. **5**B, the cross sectional view of the pass-gate transistors PG**1** and PG**3** and the isolation transistor IS**1** of the memory cell **10_1** and **10_2** are illustrated, and the pass-gate transistors PG**1** and PG**2** are N-type GAA FETs, and the isolation transistors IS**1** are P-type GAA FETs.

As shown in FIGS. **5**A and **5**B, the gate top dielectric layers **116** are over the gate structures **130***a* through **130***h*, the gate spacers **114**, and the nanostructures **120**. The material of the gate top dielectric layers **116** is discussed above.

The gate spacers **114** are on sidewalls of the gate structures **130***a* through **130***h*, as shown in FIG. **5**A. The gate spacers **114** may include the top spacers **114***a* and the inner spacers **114***b*. The top spacers **114***a* are over the nanostructures **120** and on top sidewalls of the gate structures **130***a* through **130***h*. The top spacers **114***a* may include multiple dielectric materials and be selected from a group consist of SiO_2, Si_3N_4, carbon doped oxide, nitrogen doped oxide, porous oxide, air gap, or a combination thereof. The inner spacers may include a dielectric material having higher K value (dielectric constant) than the top spacers and be selected from a group consisting of silicon nitride (Si_3N_4), silicon oxide (SiO_2), silicon carbide (SiC), silicon oxycarbide (SiOC), silicon oxynitride (SiON), silicon oxycarbon nitride (SiOCN), air gap, or a combination thereof.

The nanostructures **120** are wrapped by the gate structures **130***a* through **130***h* to serve as channels or channel layers of the transistors in the memory cell. In FIGS. **5**A and **5**B, each GAA transistor has three nanostructures **120** vertically arranged (or stacked) in the Z-direction. In other embodiments, each GAA transistor has the more or less nanostructures **120** vertically arranged (or stacked) in the Z-direction, e.g., the number of nanostructures **120** may be 2 to 10.

In the memory cell, the active regions **105***a* through **105***c* may have different widths in the X direction. In some embodiments, the widths of the active regions **105***a* through **105***c* are determined according to the channel width corresponding to the respective nanostructures **120**. As shown in FIG. **5**B, the nanostructures **120** of the pass-gate transistors PG**1** and PG**3** have a channel width CH**1** in the X direction, and the nanostructures **120** of the isolation transistors IS**1** have a channel width CH**2** in the X direction. In such embodiments, the channel width CH**2** is less than the channel width CH**1** (i.e., CH**2**<CH**1**). Moreover, the gate end dielectrics **139** are formed on opposite sides of the gate electrode **110**.

Each source/drain feature **118** is disposed between two adjacent gate structures and contact the nanostructures **120** of the transistors, as shown in FIG. **5**A. Therefore, each source/drain feature **118** is shared by two adjacent gate structures. In some embodiments, the source/drain features **118** may be also referred to as common source/drain features. As described above, the source/drain features **118** is formed by the epitaxially-grown materials discussed above. For an N-type GAA transistor, the epitaxially-grown materials **118** may include the materials with N-type conductivity, such as SiP, SiC, SiPC, SiAs, Si, or a combination thereof. For a P-type GAA transistor, the epitaxially-grown materials **118** may include the materials with P-type conductivity, such as SiGe, SiGeC, Ge, Si, a boron-doped SiGe, boron and carbon doped SiGe, or a combination thereof.

The silicide features **121** are formed between the source/drain contacts **140***a* through **140***h* and the source/drain features **118**. The silicide features **121** may include titanium silicide (TiSi), nickel silicide (NiSi), tungsten silicide (WSi), nickel-platinum silicide (NiPtSi), nickel-platinum-germanium silicide (NiPtGeSi), nickel-germanium silicide (NiGeSi), ytterbium silicide (YbSi), platinum silicide (PtSi), iridium silicide (IrSi), erbium silicide (ErSi), cobalt silicide (CoSi), or other suitable compounds.

The dielectric feature **137** may be an inter-layer dielectric (ILD), and the dielectric feature **152** may be an inter-metal dielectric (IMD). The dielectric features **137** and **152** may include one or more dielectric layers including dielectric materials, such as tetraethylorthosilicate (TEOS) oxide, undoped silicate glass, or doped silicon oxide such as borophosphosilicate glass (BPSG), fluoride-doped silica glass (FSG), phosphosilicate glass (PSG), boron doped silicon glass (BSG), a low-k dielectric material, other suitable dielectric material, or a combination thereof.

In some embodiments, the materials of the source/drain contact, the vias and metal lines in the memory cell are selected from a group consisting of titanium (Ti), titanium nitride (TiN), tantalum (Ta), tantalum nitride (TaN), titanium aluminum nitride (TiAlN), tungsten nitride (WN), tungsten (W), cobalt (Co), molybdenum (Mo), ruthenium (Ru), platinum (Pt), aluminum (Al), copper (Cu), other conductive materials, or a combination thereof.

In FIG. **5**A, the metal line **210***j* extends in the Y direction and overlap the pull-up transistors PU**1** and PU**2**. The metal line **210***j* is electrically connected to the source/drain contact **140***b* through the via **145***g* and electrically connected to the gate structure (e.g., the gate structure **130***c*) of the pull-up transistor PU**2**.

In FIG. **5**B, the metal line **210***a* is electrically connected to the gate structure (e.g., the gate structure **130***a*) of the pass-gate transistor PG**3** through the gate via **135***a*, the metal line **210***f* is electrically connected to the gate structure (e.g., the gate structure **130***e*) of the pass-gate transistor PG**1** through the gate via **135***d*. Furthermore, the metal line **210***k* is electrically connected to the gate structure (e.g., the gate structure **130***g*) of the isolation transistor IS**1** through the gate via **135***g*.

FIG. **6** shows a top view of the semiconductor structure including the memory cells **10_1** and **10_2**, with depictions of the components between the first and third metal layers, in accordance with some embodiments of the disclosure. The metal lines **220***a* through **220***g* are formed in the second metal layer and extend in the X-direction. The metal lines **230***a* through **230***e* are formed in the third metal layer and extend in the Y-direction. As described above, the memory cells **10_1** and **10_2** have a symmetrical configuration. To simplify the description, only the memory cell **10_2** is used for description.

The metal line **220***b* is electrically connected to the metal line **210***f* through the via **215***e*, so as to electrically connect the gate structures of the pass-gate transistors PG**2** and PG**1**. The metal line **220***b* functions as the word line WL_A for the memory cells **10_1** and **10_2**. The metal line **220***d* is electrically connected to the metal line **210***a* through the via **215***c*, so as to electrically connect the gate structures of the pass-gate transistors PG**3** and PG**4**. The metal line **220***d* functions as the word line WL_B for the memory cells **10_1** and **10_2**. The metal line **220***c* is electrically connected to the metal line **210***c* through the via **215***b* and to the metal line **210***h* through the via **215***g*, so as to electrically connect the source/drain contact of the pull-down transistors PD**1***a*, PD**1***b*, PD**2***a* and PD**2***b*. The metal line **220***c* functions as the VSS line for the power mesh of the memory array. Furthermore, the word line WL_B is separated from the word line WL_A by the VSS line in the second metal layer.

The metal line **230***a* is electrically connected to the metal line **210***d* through the via **225***c*, the metal line **220***e*, and the via **215***d* in sequence, so as to electrically connect the source/drain contact of the pass-gate transistor PG**4**. The metal line **230***a* functions as the complementary bit line BLB_B for the memory cell **10_2**. The metal line **230***b* is electrically connected to the metal line **210***b* through the via **225***a*, the metal line **220***a*, and the via **215***a* in sequence, so as to electrically connect the source/drain contact of the pass-gate transistor PG**3**. The metal line **230***b* functions as the bit line BL_B for the memory cell **10_2**. The metal line **230***c* is electrically connected to the metal lines **210***c* and **210***h* through the via **225***b*, the metal line **220***c*, and the vias **215***b* and **215***g* in sequence, so as to electrically connect the source/drain contact of the pull-down transistors PD**1***a*, PD**1***b*, PD**2***a* and PD**2***b*. The metal line **230***c* functions as the VSS line for the memory cell **10_2**.

The metal line **230***d* is electrically connected to the metal line **210***i* through the via **225***d*, the metal line **220***g*, and the via **215***h* in sequence, so as to electrically connect the source/drain contact of the pass-gate transistor PG**2**. The metal line **230***d* functions as the complementary bit line BLB_A for the memory cell **10_2**. The metal line **230***e* is electrically connected to the metal line **210***g* through the via **225***e*, the metal line **220***f*, and the via **215***f* in sequence, so as to electrically connect the source/drain contact of the pass-gate transistor PG**1**. The metal line **230***e* functions as the bit line BL_A for the memory cell **10_2**.

In the second metal layer, the VSS line is arranged between the word lines WL_A and WL_B, and the word lines WL_A and WL_B are wider than the VSS line. In the third metal layer, the bit line BL_B is arranged between the complementary bit line BLB_B and the VSS line, and the complementary bit line BLB_A is arranged between the bit line BL_A and the VSS line. Moreover, the bit lines BL_A and BL_B and the complementary bit lines BLB_A and BLB_B are wider than the VSS line in the third metal layer.

FIG. **7** shows a top view of the semiconductor structure including the memory cells **10_1** and **10_2**, with depictions of the components between the first and third metal layers, in accordance with some embodiments of the disclosure. The configuration of the metal lines in FIG. **7** is similar to the configuration of the metal lines in FIG. **6**, and the difference between the metal lines of FIG. **6** and the metal lines of FIG. **7** is that the semiconductor structure of FIG. **7** further includes the metal lines **230***f* and **230***g* in the third metal layer.

The metal line **230***f* is electrically connected to the metal line **220***c* through the via **225***f*, and the metal line **230***g* is electrically connected to the metal line **220***c* through the via **225***g*. The metal lines **230***f* and **230***g* also function as the VSS line for the memory cell **10_2**. Therefore, the semiconductor structure of FIG. **7** includes more VSS lines for the power mesh of the memory array.

FIG. **8** shows a top view of the semiconductor structure including the memory cells **10_1** and **10_2**, with depictions of the components in and over the second metal layer, in accordance with some embodiments of the disclosure. The metal lines **240***a* through **240***d* are formed in the fourth metal layer and extend in the X-direction.

The metal line **240***a* is electrically connected to the metal line **230***c* through the via **235***b*, and the metal line **230***c* is further electrically connected to the metal line **240***d* through the via **235***c*. The metal lines **240***a* and **240***d* function as the VSS lines for the memory cells **10_1** and **10_2**. The metal line **240***b* is electrically connected to the metal line **220***b* through the via **235***d*, the metal line **230***i* of the third metal layer and the via **225***i* in sequence. Thus, the metal lines **240***b* and **220***b* function as the word line WL_A for the memory cells **10_1** and **10_2**. Similarly, the metal line **240***c* is electrically connected to the metal line **220***d* through the via **235***a*, the metal line **230***h* of the third metal layer and the via **225***h* in sequence. Thus, the metal lines **240***c* and **220***d* function as the word line WL_B for the memory cells **10_1** and **10_2**. In FIG. **8**, the double word lines WL_A and WL_B (e.g., the word lines in the second and fourth metal layers) are used so as to decrease the resistance of the word lines WL_A and WL_B.

FIG. **9** shows a top view of the semiconductor structure including the memory cells **10_1** and **10_2**, with depictions of the components in and over the second metal layer, in accordance with some embodiments of the disclosure. The metal lines **250***a* through **250***d* are formed in the fifth metal layer and extend in the Y-direction.

In FIG. **9**, the metal lines **250***a* and **250***d* are electrically connected the metal line **220***c* through the corresponding vias and the corresponding landing pads. The metal lines **250***a* and **250***d* function as the VSS line for the memory cell **10_2**. As described above, the metal line **230***d* functions as the complementary bit line BLB_A and the metal line **230***d* functions as the bit line BL_A for the memory cell **10_2**. Furthermore, the metal line **250***b* is electrically connected to the metal line **220***e* through the corresponding vias and the corresponding landing pads, and the metal line **250***c* is electrically connected to the metal line **220***a* through the corresponding vias and the corresponding landing pads. The metal line **250***b* functions as the complementary bit line

BLB_B and the metal line **250***c* functions as the bit line BL_B for the memory cell **10_2**. In such embodiment, the bit line BL_B and the complementary bit line BLB_B are arranged in the fifth metal layer, and the bit line BL_A and the complementary bit line BLB_A are arranged in the third metal layer. Thus, the line widths of the bit lines BL_A and BL_B and the complementary bit lines BLB_A and BLB_B are increased, thereby decreasing the resistance of the bit lines BL_A and BL_B and the complementary bit lines BLB_A and BLB_B.

FIG. **10**A shows a top view of the memory cells **10_3** and **10_4** in a semiconductor device **100**B, with depictions of the components under the first metal layer of FIG. **3**, in accordance with some embodiments of the disclosure. FIG. **10**B shows a top view of the memory cells **10_3** and **10_4** of FIG. **10**A, with depictions of the components in the first metal layer. FIG. **10**C shows a top view of the memory cells **10_3** and **10_4** of FIG. **10**A, with depictions of the components under and in the first metal layer.

The memory cells **10_3** and **10_4** are an implementation of the dual-port memory cell **10** depicted in FIG. **1**. That is, each of the memory cells **10_3** and **10_4** is a 12T SRAM cell with twelve (12) transistors, including two pass-gate transistors PG**1** and PG**2** of the first port, two pass-gate transistors PG**3** and PG**4** of the second port, two pull-up transistors PU**1** and PU**2**, fourth pull-down transistors PD**1***a*, PD**1***b*, and PD**2***a* and PD**2***b*, and two isolation transistors IS**1** and IS**2**. In such embodiment, the transistors in the memory cells **10_3** and **10_4** are GAA FETs. The boundaries of the memory cells **10_3** and **10_4** are indicated by dashed lines.

Components in the semiconductor device **100**A of FIGS. **4**A through **4**C that are the same or similar to those in the semiconductor device **100**B of FIGS. **10**A through **10**C are given the same reference numbers, and the detailed description thereof is thus omitted.

The configuration of the semiconductor device **100**B in FIG. **10**A is similar to the configuration of the semiconductor device **100**A in FIG. **4**A, and the difference between the semiconductor device **100**A of FIG. **4**A and the semiconductor device **100**B of FIG. **10**A is that the locations of the gate vias **135***b* and **135***f* and the vias **145***b*, **145***d*, **145***g*, **145***i* and **145***f* are changed. Thus, the configuration of the metal lines in the first metal layer are also changed.

In the first metal layer, the metal lines **210***b*, **210***e* and **210***d* are arranged on a first straight line along the Y direction, and the metal line **210***c* is arranged on a second straight line along the Y direction. The metal line **210***f* is arranged on a third straight line along the Y direction. The metal lines **210***g*, **210***j* and **210***i* are arranged on a fourth straight line along the Y direction. In such embodiments, the first through fourth straight lines are arranged between the left boundary and the right boundary of the memory cell **10_4** in sequence. Furthermore, the first through fourth straight lines are disposed over the P-type well region **103***b*. In such embodiment, only the metal line **210***k* is disposed over (i.e., directly above) the N-type well region **103***a* in the first metal layer.

FIG. **11** shows a top view of the semiconductor structure including the memory cells **10_3** and **10_4**, with depictions of the components between the first and third metal layers, in accordance with some embodiments of the disclosure. The configuration of the metal lines in the second and third metal layers of FIG. **11** are the same or similar to those in the second and third metal layers of FIG. **6**.

In FIG. **11**, the bit lines BL_A and BL_B and the complementary bit lines BLB_A and BLB_B are formed in the third metal layer, and the word lines WL_A and WL_B are formed in the second metal layer. In the second metal layer, the VSS line is arranged between the word lines WL_A and WL_B, and the word lines WL_A and WL_B are wider than the VSS line. In the third metal layer, the bit line BL_B is arranged between the complementary bit line BLB_B and the VSS line, and the complementary bit line BLB_A is arranged between the bit line BL_A and the VSS line. Moreover, the bit lines BL_A and BL_B and the complementary bit lines BLB_A and BLB_B are wider than the VSS line in the third metal layer. In some embodiments, the bit lines BL_A and BL_B and the complementary bit lines BLB_A and BLB_B have the same width.

In some embodiments, the semiconductor structure of FIG. **11** includes more VSS lines in the third metal layer for the power mesh of the memory array, such as the metal lines **230***f* and **230***g* in FIG. **7**. In some embodiments, the double word lines WL_A and WL_B (e.g., the word lines in the second and fourth metal layers in FIG. **8**) are used in the semiconductor structure of FIG. **11** so as to decrease the resistance of the word lines WL_A and WL_B. In some embodiments, the bit line BL_B and the complementary bit line BLB_B are arranged on a different metal layer from the bit line BL_A and the complementary bit line BLB_A, as shown in FIG. **9**.

FIG. **12** shows a memory cell **20**, in accordance with some embodiments of the disclosure. In this embodiment, the memory cell **20** is a dual-port (DP) SRAM bit cell. The memory cell **20** includes a pair of cross-coupled inverters Inverter-**1** and Inverter-**2**, and the pass-gate transistors PG**1**, PG**2**, PG**3** and PG**4**. The inverters Inverter-**1** and Inverter-**2** are cross-coupled between the data nodes n**2** and n**1**, and form a latch circuit. Compared with the memory cell **10** of FIG. **1**, the memory cell **20** is free of the isolation transistors IS**1** and IS**2**.

FIG. **13**A shows a top view of the memory cells **20_1** and **20_2** in a semiconductor device **200**A, with depictions of the components under the first metal layer of FIG. **3**, in accordance with some embodiments of the disclosure. FIG. **13**B shows a top view of the memory cells **20_1** and **20_2** of FIG. **13**A, with depictions of the components in the first metal layer. FIG. **13**C shows a top view of the memory cells **20_1** and **20_2** of FIG. **13**A, with depictions of the components under and in the first metal layer.

In FIGS. **13**A through **13**C, the same components in the memory cells **20_1** and **20_2** as the memory cells **10_1** and **10_2** of FIGS. **4**A through **4**C are given the same reference numbers, and the detailed description thereof is thus omitted. Furthermore, the memory cells **20_1** and **20_2** are arranged in the same row of the memory array, and the memory cell **20_1** is in contact with the adjacent memory cell **20_2**.

The memory cells **20_1** and **20_2** are an implementation of the dual-port memory cell **20** depicted in FIG. **12**. That is, each of the memory cells **20_1** and **20_2** is a 10T SRAM cell with ten (10) transistors, including two pass-gate transistors PG**1** and PG**2** of the first port, two pass-gate transistors PG**3** and PG**4** of the second port, two pull-up transistors PU**1** and PU**2**, and fourth pull-down transistors PD**1***a*, PD**1***b*, and PD**2***a* and PD**2***b*. In such embodiment, the transistors in the memory cells **20_1** and **20_2** are GAA FETs. The boundaries of the memory cells **20_1** and **20_2** are indicated by dashed lines.

The memory cells **20_1** and **20_2** are joined along a center line extending along the Y-direction. In other words, the memory cells **20_1** and **20_2** are arranged in mirror symmetry along the Y-direction. It is noted that the illustration of the cells **20_1** and **20_2** is for the purposes of demon-

strating the highly symmetric nature of the SRAM cells of the present disclosure and how two adjacent SRAM cells share the same N-type well region **103***a*. Thus, device stability and cell matching are improved, so as to increase the chip speed and achieve lower power supply for the memory device.

Each of the SRAM cells **20_1** and **20_2** includes a cell height H**1** along the Y direction and a cell width W**1** along the X direction. In such embodiment, the cell height H**1** spans over a total of 4 gate structures and is measured at about 4 gate pitches. Each gate pitch includes a gate length along the Y direction and a gate spacing between two adjacent gate structures along the Y direction.

In each of the memory cells **20_1** and **20_2**, the 10 transistors are formed upon 2 continuous active regions (or oxide definition (OD) regions) and 1 discontinuous active region. Furthermore, each of the memory cells **20_1** and **20_2** includes a substrate (not labeled) having the P-type well region **103***b* and the N-type well region **103***a*. Each of the memory cells **20_1** and **20_2** includes the active regions **105***a*, **105***b*, **105***c*_**1**, **105***c*_**2** and **105***c*_**3** extending along the Y direction. The active regions **105***a* and **105***b* are formed in the P-type well region **103***b*, and the active regions **105***c*_**1**, **105***c*_**2** and **105***c*_**3** are formed in the N-type well region **103***a*. In such embodiments, the active regions **105***a* and **105***b* are continuous, and the active regions **105***c*_**1**, **105***c*_**2** and **105***c*_**3** are discontinuous. Furthermore, no transistor is formed in the active regions **105***c*_**1** and **105***c*_**3**.

The configuration of the semiconductor device **100**A in FIGS. **4**A through **4**C is similar to the configuration of the semiconductor device **200**A in FIGS. **13**A through **13**C, and the difference between the semiconductor device **100**A and semiconductor device **200**A is that the semiconductor device **200**A includes the dielectric gate structures **150***a* and **150***b* extending in the X-direction.

The dielectric gate structures **150***a* and **150***b* are the isolation structures formed over the N-type well region **103***a*. The dielectric gate structure **150***a* is formed between the gate structures **130***e* of the pass-gate transistors PG**1** of the memory cells **20_1** and **20_2**. Furthermore, the dielectric gate structure **150***a* is in contact with the gate structures **130***e* of the pass-gate transistors PG**1** of the memory cells **20_1** and **20_2**. The dielectric gate structure **150***b* is formed between the gate structures **130***f* of the pass-gate transistors PG**2** of the memory cells **20_1** and **20_2**. Furthermore, the dielectric gate structure **150***b* is in contact with the gate structures **130***e* of the pass-gate transistors PG**2** of the memory cells **20_1** and **20_2**. The active region **105***c*_**3** is separated from the active region **105***c*_**2** by the dielectric gate structure **150***a*, and the active region **105***c*_**2** is separated from the active region **105***c*_**1** by the dielectric gate structure **150***b*. In other words, the active region **105***c*_**2** is surrounded (or sandwiched) by the dielectric gate structures **150***a* and **150***b*. The active region **105***c*_**2** with the dielectric gate structures **150***a* and **150***b* are used to improve both active line end shrink control problem and LOD effect for the pull-up transistors PU**1** and PU**2**.

In each of the memory cells **20_1** and **20_2**, the gate structure **130***b* engages the active region **105***c*_**2** to form the pull-up transistor PU**1**, and the gate structure **130***c* engages the active region **105***c*_**2** to form the pull-up transistor PU**2**. The pull-up transistors PU**1** and PU**2** are formed in the discontinuous active region **105***c*_**2**.

In some embodiments, the OD break region is formed by the dielectric gate structures **150***a* and **150***b*, and the dielectric gate structures **150***a* and **150***b* are dummy gate structures configured to break the channel region structure for isolating the drain of the pull-up transistors PU**1** and PU**2** from the adjacent memory cells. The OD break region is substantially a regular gate length dimension and has a trench depth that is deeper than the bottom channel region of the transistors a range of 15 nm to 150 nm.

FIG. **14**A shows a cross sectional view of the semiconductor device **200**A along a line C-C' in FIGS. **13**A through **13**C, in accordance with some embodiments of the disclosure. As described above, the memory cell **20_2** has a cell height (or cell pitch) H**1** measurable in the Y-direction. In FIG. **14**A, the cross sectional view of the pull-up transistors PU**1** and PU**2** are illustrated, and the pull-up transistors PU**1** and PU**2** are P-type GAA FETs.

FIG. **14**B shows a cross sectional view of the semiconductor device **200**A along a line D-D' in FIGS. **13**A through **13**C, in accordance with some embodiments of the disclosure. In FIG. **14**B, the cross sectional view of the pass-gate transistors PG**1** and PG**3** of the memory cell **20_1** and **20_2** are illustrated, and the pass-gate transistors PG**1** and PG**2** are N-type GAA FETs.

In FIGS. **14**A and **14**B, components that are similar to those in FIGS. **5**A and **5**B will be omitted. In the semiconductor device **200**A, the dielectric gate structures **150***a* and **150***b* are formed by removing the gate region (e.g., the gate structures **130***g* and **130***h* of the semiconductor device **100**A) and filling a dielectric material (e.g., a single layer, or multiple layers with various dielectric material) into the N-type well region **103***a*. In some embodiments, the dielectric gate structures **150***a* and **150***b* have the depth D**1** that is deeper than the bottom channel region of the transistors about 15 nm~150 nm.

FIG. **15** shows a top view of the semiconductor structure including the memory cells **20_1** and **20_2**, with depictions of the components between the first and third metal layers, in accordance with some embodiments of the disclosure. The metal lines **220***a* through **220***g* are formed in the second metal layer and extend in the X-direction. The metal lines **230***a* through **230***e* are formed in the third metal layer and extend in the Y-direction. As described above, the memory cells **20_1** and **20_2** have a symmetrical configuration.

Components in the semiconductor device **100**A of FIG. **6** that are the same or similar to those in the semiconductor device **100**B of FIG. **15** are given the same reference numbers, and the detailed description thereof is thus omitted.

In FIG. **15**, the bit lines BL_A and BL_B and the complementary bit lines BLB_A and BLB_B are formed in the third metal layer, and the word lines WL_A and WL_B are formed in the second metal layer. In the second metal layer, the VSS line is arranged between the word lines WL_A and WL_B, and the word lines WL_A and WL_B are wider than the VSS line. In the third metal layer, the bit line BL_B is arranged between the complementary bit line BLB_B and the VSS line, and the complementary bit line BLB_A is arranged between the bit line BL_A and the VSS line. Moreover, the bit lines BL_A and BL_B and the complementary bit lines BLB_A and BLB_B are wider than the VSS line in the third metal layer.

In some embodiments, the semiconductor structure of FIG. **15** includes more VSS lines in the third metal layer for the power mesh of the memory array, such as the metal lines **230***f* and **230***g* in FIG. **7**. In some embodiments, the double word lines WL_A and WL_B (e.g., the word lines in the second and fourth metal layers in FIG. **8**) are used in the semiconductor structure of FIG. **11** so as to decrease the resistance of the word lines WL_A and WL_B. In some

embodiments, the bit line BL_B and the complementary bit line BLB_B are arranged on a different metal layer from the bit line BL_A and the complementary bit line BLB_A, as shown in FIG. **9**.

FIG. **16** shows a top view of the memory cells **20_3** and **20_4** in a semiconductor device **200**B, with depictions of the components under and in the first metal layer. The memory cells **20_3** and **20_4** are an implementation of the dual-port memory cell **20** depicted in FIG. **12**. That is, each of the memory cells **20_3** and **20_4** is a 10T SRAM cell with ten (10) transistors, including two pass-gate transistors PG**1** and PG**2** of the first port, two pass-gate transistors PG**3** and PG**4** of the second port, two pull-up transistors PU**1** and PU**2**, and fourth pull-down transistors PD**1***a*, PD**1***b*, and PD**2***a* and PD**2***b*. In such embodiment, the transistors in the memory cells **20_3** and **20_4** are GAA FETs. The boundaries of the memory cells **20_3** and **20_4** are indicated by dashed lines.

Components in the semiconductor device **200**A of FIGS. **13**A through **13**C that are the same or similar to those in the semiconductor device **200**B of FIG. **16** are given the same reference numbers, and the detailed description thereof is thus omitted.

The configuration of the semiconductor device **200**B in FIG. **16** is similar to the configuration of the semiconductor device **200**A in FIG. **10**C, and the difference between the semiconductor device **200**A of FIG. **10**C and the semiconductor device **200**B of FIG. **16** is that the configuration of the metal lines in the first metal layer are changed. In such embodiment, only the metal line **210***k* is disposed over the N-type well region **103***a* in the first metal layer.

FIG. **17** shows a top view of the semiconductor structure including the memory cells **20_3** and **20_4**, with depictions of the components between the first and third metal layers, in accordance with some embodiments of the disclosure. The configuration of the metal lines in the second and third metal layers of FIG. **17** are the same or similar to those in the second and third metal layers of FIG. **15**.

In FIG. **17**, the bit lines BL_A and BL_B and the complementary bit lines BLB_A and BLB_B are formed in the third metal layer, and the word lines WL_A and WL_B are formed in the second metal layer. In the second metal layer, the VSS line is arranged between the word lines WL_A and WL_B, and the word lines WL_A and WL_B are wider than the VSS line. In the third metal layer, the bit line BL_B is arranged between the complementary bit line BLB_B and the VSS line, and the complementary bit line BLB_A is arranged between the bit line BL_A and the VSS line. Moreover, the bit lines BL_A and BL_B and the complementary bit lines BLB_A and BLB_B are wider than the VSS line in the third metal layer.

In some embodiments, the semiconductor structure of FIG. **11** includes more VSS lines in the third metal layer for the power mesh of the memory array, such as the metal lines **230***f* and **230***g* in FIG. **7**. In some embodiments, the double word lines WL_A and WL_B (e.g., the word lines in the second and fourth metal layers in FIG. **8**) are used in the semiconductor structure of FIG. **11** so as to decrease the resistance of the word lines WL_A and WL_B. In some embodiments, the bit line BL_B and the complementary bit line BLB_B are arranged on a different metal layer from the bit line BL_A and the complementary bit line BLB_A, as shown in FIG. **9**.

FIG. **18** shows a top view of the memory cells **20_5** and **20_6** in a semiconductor device **200**C, with depictions of the components under and in the first metal layer. The memory cells **20_5** and **20_6** are an implementation of the dual-port memory cell **20** depicted in FIG. **12**. That is, each of the memory cells **20_5** and **20_6** is a 10T SRAM cell with ten (10) transistors, including two pass-gate transistors PG**1** and PG**2** of the first port, two pass-gate transistors PG**3** and PG**4** of the second port, two pull-up transistors PU**1** and PU**2**, and fourth pull-down transistors PD**1***a*, PD**1***b*, and PD**2***a* and PD**2***b*. In such embodiment, the transistors in the memory cells **20_5** and **20_6** are GAA FETs. The boundaries of the memory cells **20_5** and **20_6** are indicated by dashed lines.

In FIG. **18**, the same components in the memory cells **20_5** and **20_6** as the memory cells **10_1** and **10_2** of FIGS. **4**A through **4**C are given the same reference numbers, and the detailed description thereof is thus omitted. Furthermore, the memory cells **20_5** and **20_6** are arranged in the same row of the memory array, and the memory cell **20_5** is in contact with the adjacent memory cell **20_6**.

The memory cells **20_5** and **20_6** are an implementation of the dual-port memory cell **20** depicted in FIG. **12**. That is, each of the memory cells **20_5** and **20_6** is a 10T SRAM cell with ten (10) transistors, including two pass-gate transistors PG**1** and PG**2** of the first port, two pass-gate transistors PG**3** and PG**4** of the second port, two pull-up transistors PU**1** and PU**2**, and fourth pull-down transistors PD**1***a*, PD**1***b*, and PD**2***a* and PD**2***b*. In such embodiment, the transistors in the memory cells **20_5** and **20_6** are GAA FETs. The boundaries of the memory cells **20_5** and **20_6** are indicated by dashed lines.

The memory cells **20_5** and **20_6** are joined along a center line extending along the Y-direction. In other words, the memory cells **20_5** and **20_6** are arranged in mirror symmetry along the Y-direction. It is noted that the illustration of the cells **20_5** and **20_6** is for the purposes of demonstrating the highly symmetric nature of the SRAM cells of the present disclosure and how two adjacent SRAM cells share the same N-type well region **103***a*. Thus, device stability and cell matching are improved, so as to increase the chip speed and achieve lower power supply for the memory device.

Each of the SRAM cells **20_5** and **20_6** includes a cell height H**1** along the Y direction and a cell width W**1** along the X direction. In such embodiment, the cell height H**1** spans over a total of 4 gate structures and is measured at about 4 gate pitches. Each gate pitch includes a gate length along the Y direction and a gate spacing between two adjacent gate structures along the Y direction.

In each of the memory cells **20_5** and **20_6**, the 10 transistors are formed upon 2 continuous active regions (or oxide definition (OD) regions) and 1 discontinuous active region. Furthermore, the active regions **105***a* and **105***b* are formed in the P-type well region **103***b*, and the active regions **105***c* is formed in the N-type well region **103***a*. In such embodiments, the active regions **105***a* and **105***b* are continuous, and the active region **105***c* is discontinuous.

The configuration of the semiconductor device **100**A in FIGS. **4**A through **4**C is similar to the configuration of the semiconductor device **200**C in FIG. **18**, and the difference between the semiconductor device **100**A and semiconductor device **200**C is that the semiconductor device **200**A includes the isolation structures formed by the gate structures **130***g* and **130***h*.

In FIG. **18**, no metal line is electrically connected to the gate structures **130***g* and **130***h*. In some embodiments, the OD break region is formed by the gate structures **130***g* and **130***h*, and the gate structures **130***g* and **130***h* are dummy gate structures configured to break the source/drain region and located between two dummy gate regions (or two adjacent memory cells) for isolating the drain of the pull-up transistors PU**1** and PU**2** from the adjacent memory cells. In such

embodiments, the gate structures **130***g* and **130***h* are disposed over the two opposite sides (or two opposite ends) of the active region **105***c*.

Embodiments of semiconductor devices are provided. The semiconductor devices include the dual-port memory cells arranged in a memory array. In each dual-port memory cell, the N-type transistors of the first port and a first inverter share a first continuous active region, the N-type transistors of the second port and a second inverter share a second continuous active region, and the P-type transistors share a third continuous active region. Therefore, the fewer active regions and fewer metal lines in each layer are used in the dual-port memory cells, and the dual-port memory cells have highly capability for cell scaling. Furthermore, the word line WL_A and WL_B are arranged in lower metal layer and the bit lines BL_A and BL_B and the complementary bit lines BLB_A and BLB_B are arranged in higher single or multiple metal layers, so as to obtain wider bit line dimension, thereby achieve high density and high speed product requirements for the memory.

In some embodiments, a semiconductor device is provided. The semiconductor device includes a dual-port memory cell. The dual-port memory cell includes a first inverter, a second inverter cross-coupled to the first inverter, first and second pass-gate transistors coupled to the first inverter to form a first port, third and fourth pass-gate transistors coupled to the second inverter to form a second port, a first isolation transistor and a second isolation transistor. The first inverter includes a first pull-up transistor, a first pull-down transistor, and a second pull-down transistor connected in parallel with the first pull-down transistor. The second inverter includes a second pull-up transistor, a third pull-down transistor, and a fourth pull-down transistor connected in parallel with the third pull-down transistor. The first isolation transistor has a drain coupled to the first pull-up transistor and the first and third pass-gate transistors. The second isolation transistor has a drain coupled to the second pull-up transistor and the second and fourth pass-gate transistors. The first and second pass-gate transistors and the first and third pull-down transistors share a first continuous active region extending in a first direction. The third and fourth pass-gate transistors and the second and fourth pull-down transistors share a second continuous active region extending in the first direction. The first and second pull-up transistors and the first and second isolation transistors share a third continuous active region extending in the first direction. The gates of the first and second isolation transistors are electrically connected to a VDD line of a first metal layer extending in the first direction, and the sources of the first and second isolation transistors are floating.

In some embodiments, a semiconductor device is provided. The semiconductor device includes a dual-port memory cell. The dual-port memory cell includes a first inverter, a second inverter, first and second pass-gate transistors coupled to the first inverter to form a first port, third and fourth pass-gate transistors coupled to the second inverter to form a second port. The first inverter includes a first pull-up transistor, a first pull-down transistor, and a second pull-down transistor connected in parallel with the first pull-down transistor. The second inverter includes a second pull-up transistor, a third pull-down transistor, and a fourth pull-down transistor connected in parallel with the third pull-down transistor. The first and second pass-gate transistors and the first and third pull-down transistors share a first continuous active region extending in a first direction. The third and fourth pass-gate transistors and the second and fourth pull-down transistors share a second continuous active region extending in the first direction. The first and second pull-up transistors share a discontinuous active region extending in the first direction. The discontinuous active region is surrounded by a first isolation structure and a second isolation structure extending in a second direction that is perpendicular to the first direction.

In some embodiments, a semiconductor device is provided. The semiconductor device includes a dual-port memory cell. The dual-port memory cell includes a first inverter, a second inverter, first and second pass-gate transistors coupled to the first inverter to form a first port, third and fourth pass-gate transistors coupled to the second inverter to form a second port, and first and second dummy gate structures extending in a second direction that is perpendicular to the first direction. The first inverter includes a first pull-up transistor, a first pull-down transistor, and a second pull-down transistor connected in parallel with the first pull-down transistor. The second inverter includes a second pull-up transistor, a third pull-down transistor, and a fourth pull-down transistor connected in parallel with the third pull-down transistor. The first and second pass-gate transistors and the first and third pull-down transistors share a first continuous active region extending in a first direction. The third and fourth pass-gate transistors and the second and fourth pull-down transistors share a second continuous active region extending in the first direction. The first and second pull-up transistors share a discontinuous active region extending in the first direction. The first and second dummy gate structures are disposed over two opposite sides of the discontinuous active region in the first direction.

The foregoing outlines nodes of several embodiments so that those skilled in the art may better understand the aspects of the present disclosure. Those skilled in the art should appreciate that they may readily use the present disclosure as a basis for designing or modifying other processes and structures for carrying out the same purposes and/or achieving the same advantages of the embodiments introduced herein. Those skilled in the art should also realize that such equivalent constructions do not depart from the spirit and scope of the present disclosure, and that they may make various changes, substitutions, and alterations herein without departing from the spirit and scope of the present disclosure.

What is claimed is:

1. A semiconductor device, comprising:

a dual-port memory cell, comprising:

a first inverter, comprising a first pull-up transistor, a first pull-down transistor, and a second pull-down transistor connected in parallel with the first pull-down transistor;

a second inverter cross-coupled to the first inverter, and comprising a second pull-up transistor, a third pull-down transistor, and a fourth pull-down transistor connected in parallel with the third pull-down transistor;

first and second pass-gate transistors coupled to the first inverter to form a first port;

third and fourth pass-gate transistors coupled to the second inverter to form a second port;

a first isolation transistor, having a drain coupled to the first pull-up transistor and the first and third pass-gate transistors; and

a second isolation transistor, having a drain coupled to the second pull-up transistor and the second and fourth pass-gate transistors,

wherein the first and second pass-gate transistors and the first and third pull-down transistors share a first continuous active region extending in a first direction,

wherein the third and fourth pass-gate transistors and the second and fourth pull-down transistors share a second continuous active region extending in the first direction,

wherein the first and second pull-up transistors and the first and second isolation transistors share a third continuous active region extending in the first direction,

wherein gates of the first and second isolation transistors are electrically connected to a VDD line of a first metal layer extending in the first direction, and sources of the first and second isolation transistors are floating.

2. The semiconductor device as claimed in claim **1**, wherein the dual-port memory cell further comprises:

a first source/drain contact extending in a second direction that is perpendicular to the first direction, and electrically connected to drains of the first and third pass-gate transistors, the first and second pull-down transistors, the first pull-up transistor and the first isolation transistor; and

a second source/drain contact extending in the second direction, and electrically connected to drains of the second and fourth pass-gate transistors, the third and fourth pull-down transistors, the second pull-up transistor and the second isolation transistor.

3. The semiconductor device as claimed in claim **2**, wherein the dual-port memory cell further comprises:

a first gate structure extending in the second direction and across the first, second and third continuous active regions, wherein the first gate structure is shared by the first pull-up transistor and the first and second pull-down transistors;

a second gate structure extending in the second direction and across the first, second and third continuous active regions, wherein the second gate structure is shared by the second pull-up transistor and the third and fourth pull-down transistors,

wherein the first and second gate structures are arranged between the first and second source/drain contacts.

4. The semiconductor device as claimed in claim **1**, wherein the dual-port memory cell further comprises:

a first word line landing pad and a second word line landing pad extending in the first direction,

wherein the first word line landing pad is electrically connected to gates of the first and second pass-gate transistors, and the second word line landing pad is electrically connected to gates of the third and fourth pass-gate transistors,

wherein the first and second word line landing pads are formed in the first metal layer.

5. The semiconductor device as claimed in claim **4**, wherein the VDD line is disposed at a first cell boundary of the dual-port memory cell, and the second word line landing pad is disposed at a second cell boundary of the dual-port memory cell, wherein the first cell boundary is opposite the second cell boundary, and the first word line landing pad is disposed between the second word line landing pad and the VDD line.

6. The semiconductor device as claimed in claim **1**, wherein the first and second continuous active regions are formed in a P-type well region, and the third continuous active region is formed in an N-type well region, wherein a width of the third continuous active region is less than the widths of the first and second continuous active regions in a second direction that is perpendicular to the first direction.

7. The semiconductor device as claimed in claim **6**, wherein in the first metal layer, only the VDD line is formed over the N-type well region.

8. The semiconductor device as claimed in claim **1**, wherein the dual-port memory cell further comprises:

a first word line formed in a second metal layer over the first metal layer and extending in a second direction that is perpendicular to the first direction;

a second word line formed in the second metal layer and extending in the second direction; and

a VSS line formed in the second metal layer and extending in the second direction,

wherein the first word line is electrically connected to the gates of the first and second pass-gate transistors, and the second word line is electrically connected to the gates of the third and fourth pass-gate transistors,

wherein the VSS line is electrically connected to the sources of the first, second, third and fourth pull-down transistors.

9. The semiconductor device as claimed in claim **8**, wherein the first word line is separated from the second word line by the VSS line, and the first and second word lines are wider than the VSS line.

10. The semiconductor device as claimed in claim **1**, wherein the dual-port memory cell further comprises:

a first bit line formed in a second metal layer over the first metal layer and extending in the first direction;

a second bit line formed in the second metal layer and extending in the first direction; and

a VSS line formed in the second metal layer and extending in the first direction,

wherein the VSS line is electrically connected to the sources of the first, second, third and fourth pull-down transistors,

wherein the first bit line is electrically connected to the first pass-gate transistor, and the second bit line is electrically connected to the third pass-gate transistor,

wherein the VSS line is disposed between the first and second bit lines, and the first and second bit lines are wider than the VSS line.

11. The semiconductor device as claimed in claim **10**, wherein the dual-port memory cell further comprises:

a first complementary bit line formed in the second metal layer and extending in the first direction; and

a second complementary bit line formed in the second metal layer and extending in the first direction,

wherein the first complementary bit line is electrically connected to the second pass-gate transistor, and the second complementary bit line is electrically connected to the fourth pass-gate transistor,

wherein the first complementary bit line is complementary to the first bit line, and the second complementary bit line is complementary to the second bit line,

wherein the second bit line is disposed between the VSS line and the second complementary bit line, and the first complementary bit line is disposed between the VSS line and the first bit line, and the first and second complementary bit lines and the first and second bit lines have the same width.

12. A semiconductor device, comprising:

a dual-port memory cell, comprising:

a first inverter, comprising a first pull-up transistor, a first pull-down transistor, and a second pull-down transistor connected in parallel with the first pull-down transistor;

a second inverter cross-coupled to the first inverter, and comprising a second pull-up transistor, a third pull-

down transistor, and a fourth pull-down transistor connected in parallel with the third pull-down transistor;

first and second pass-gate transistors coupled to the first inverter to form a first port; and

third and fourth pass-gate transistors coupled to the second inverter to form a second port;

wherein the first and second pass-gate transistors and the first and third pull-down transistors share a first continuous active region extending in a first direction,

wherein the third and fourth pass-gate transistors and the second and fourth pull-down transistors share a second continuous active region extending in the first direction,

wherein the first and second pull-up transistors share a discontinuous active region extending in the first direction,

wherein the discontinuous active region is surrounded by a first isolation structure and a second isolation structure extending in a second direction that is perpendicular to the first direction.

13. The semiconductor device as claimed in claim **12**, wherein each of the first and second isolation structures is formed by a dielectric gate structure.

14. The semiconductor device as claimed in claim **12**, wherein the first isolation structure is in contact with a gate structure of the first pass-gate transistor, and the second isolation structure is in contact with a gate structure of the second pass-gate transistor.

15. The semiconductor device as claimed in claim **12**, wherein the dual-port memory cell further comprises:

a first source/drain contact extending in the second direction, and electrically connected to drains of the first and third pass-gate transistors, the first and second pull-down transistors, and the first pull-up transistor; and

a second source/drain contact extending in the second direction, and electrically connected to drains of the second and fourth pass-gate transistors, the third and fourth pull-down transistors, and the second pull-up transistor.

16. The semiconductor device as claimed in claim **12**, wherein the first and second continuous active regions are formed in a P-type well region, and the discontinuous active region is formed in an N-type well region, wherein a width of the discontinuous active region is less than the widths of the first and second continuous active regions in the second direction.

17. The semiconductor device as claimed in claim **12**, wherein the dual-port memory cell further comprises:

a first word line extending in the second direction;

a second word line extending in the second direction; and

a VSS line extending in the second direction,

wherein the first word line, the second word line and the VSS line are formed in the same metal layer,

wherein the first word line is electrically connected to gates of the first and second pass-gate transistors, and the second word line is electrically connected to gates of the third and fourth pass-gate transistors,

wherein the VSS line is electrically connected to sources of the first, second, third and fourth pull-down transistors,

wherein the first word line is separated from the second word line by the VSS line, and the first and second word lines are wider than the VSS line.

18. A semiconductor device, comprising:

a dual-port memory cell, comprising:

a first inverter, comprising a first pull-up transistor, a first pull-down transistor, and a second pull-down transistor connected in parallel with the first pull-down transistor;

a second inverter cross-coupled to the first inverter, and comprising a second pull-up transistor, a third pull-down transistor, and a fourth pull-down transistor connected in parallel with the third pull-down transistor;

first and second pass-gate transistors coupled to the first inverter to form a first port;

third and fourth pass-gate transistors coupled to the second inverter to form a second port; and

first and second dummy gate structures extending in a second direction that is perpendicular to the first direction,

wherein the first and second pass-gate transistors and the first and third pull-down transistors share a first continuous active region extending in a first direction,

wherein the third and fourth pass-gate transistors and the second and fourth pull-down transistors share a second continuous active region extending in the first direction,

wherein the first and second pull-up transistors share a discontinuous active region extending in the first direction,

wherein the first and second dummy gate structures are disposed over two opposite sides of the discontinuous active region in the first direction.

19. The semiconductor device as claimed in claim **18**, wherein the dual-port memory cell further comprises:

a first source/drain contact extending in the second direction, and electrically connected to drains of the first and third pass-gate transistors, the first and second pull-down transistors, and the first pull-up transistor; and

a second source/drain contact extending in the second direction, and electrically connected to drains of the second and fourth pass-gate transistors, the third and fourth pull-down transistors, and the second pull-up transistor.

20. The semiconductor device as claimed in claim **19**, wherein the dual-port memory cell further comprises:

a first gate structure extending in the second direction and across the first and second continuous active regions and the discontinuous active region, wherein the first gate structure is shared by the first pull-up transistor and the first and second pull-down transistors;

a second gate structure extending in the second direction and across the first and second continuous active regions and the discontinuous active region, wherein the second gate structure is shared by the second pull-up transistor and the third and fourth pull-down transistors,

wherein the first and second gate structures are arranged between the first and second source/drain contacts.

* * * * *