US 20250275483A1

(19) United States
(12) Patent Application Publication
Hashemi et al.
(10) Pub. No.: US 2025/0275483 A1
(43) Pub. Date: Aug. 28, 2025

(54) **PERPENDICULAR SPIN-ORBIT TORQUE MAGNETIC RANDOM ACCESS MEMORY**

(71) Applicant: **International Business Machines Corporation**, Armonk, NY (US)

(72) Inventors: **Pouya Hashemi**, Purchase, NY (US); **Jonathan Zanhong Sun**, Shrub Oak, NY (US); **Daniel Worledge**, San Jose, CA (US)

(21) Appl. No.: **18/584,342**

(22) Filed: **Feb. 22, 2024**

Publication Classification

(51) **Int. Cl.**

H10N 50/20	(2023.01)
H10B 61/00	(2023.01)
H10N 50/01	(2023.01)
H10N 50/80	(2023.01)

(52) **U.S. Cl.**

CPC ***H10N 50/20*** (2023.02); ***H10B 61/00*** (2023.02); ***H10N 50/01*** (2023.02); ***H10N 50/80*** (2023.02)

(57) **ABSTRACT**

A SOT MRAM structure having a perpendicular magnetic free layer magnetization is provided The structure includes a spin conductor charge insulator layer having a horizontal portion and a vertical portion, and a spin conductor layer contacting the horizontal portion of the spin conductor charge insulator layer, and a first sidewall of the vertical portion of the spin conductor charge insulator layer. The structure further includes a MTJ structure having a magnetic free layer in direct physical contact with the spin conductor layer, a MTJ cap, a MRAM electrode-containing hard mask, and an I-shaped SOT channel located on a second sidewall of the vertical portion of the spin conductor charge insulator layer. The structure further includes a dielectric pillar located adjacent to, and in direct contact with, the I-shaped SOT channel.

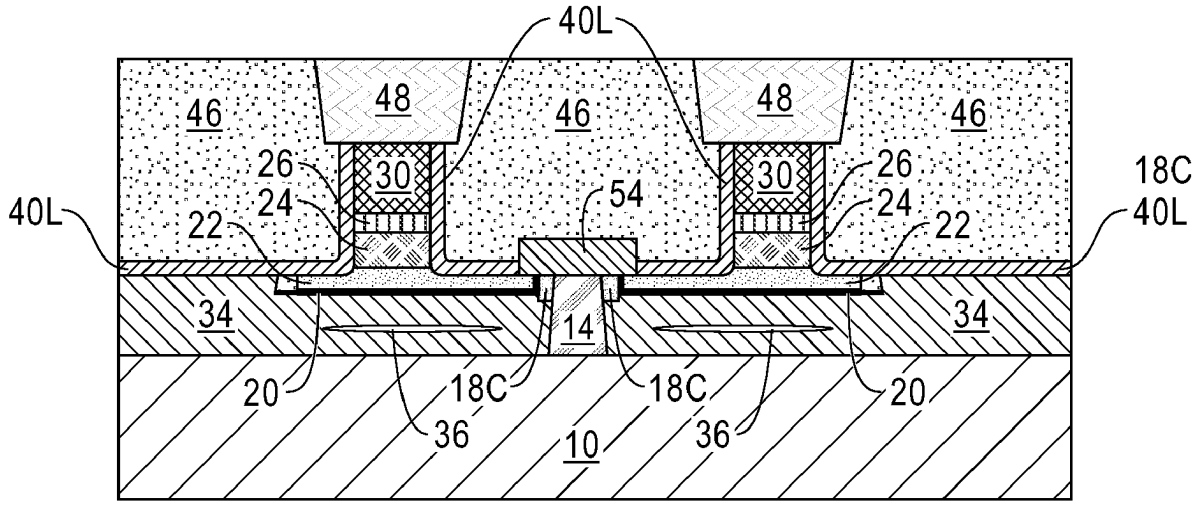

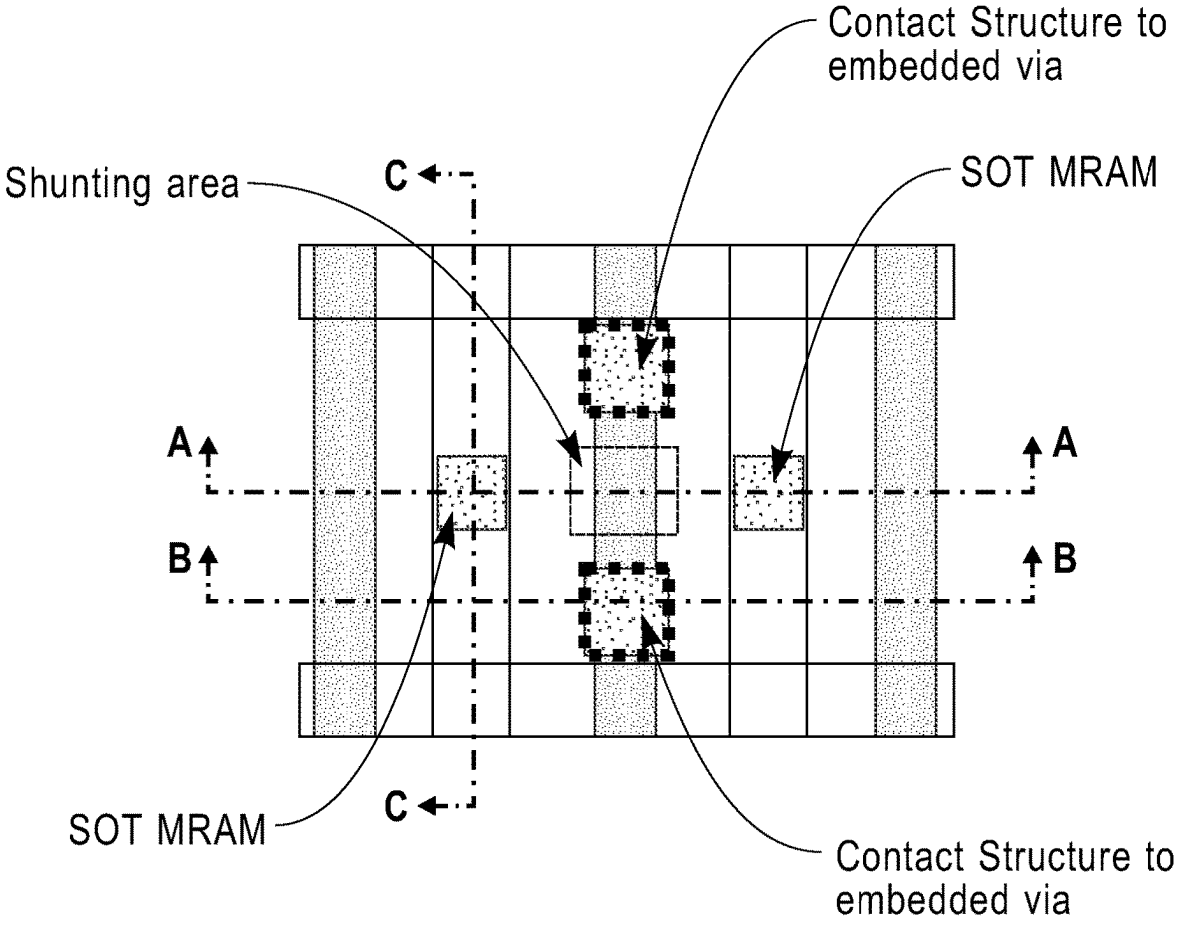
Contact Structure to embedded via
Shunting area
C
SOT MRAM
A
A
B
B
C
SOT MRAM
Contact Structure to embedded via

FIG. 1

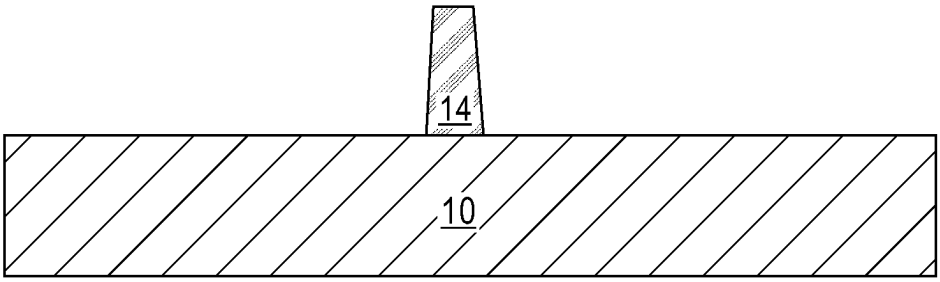

FIG. 2A

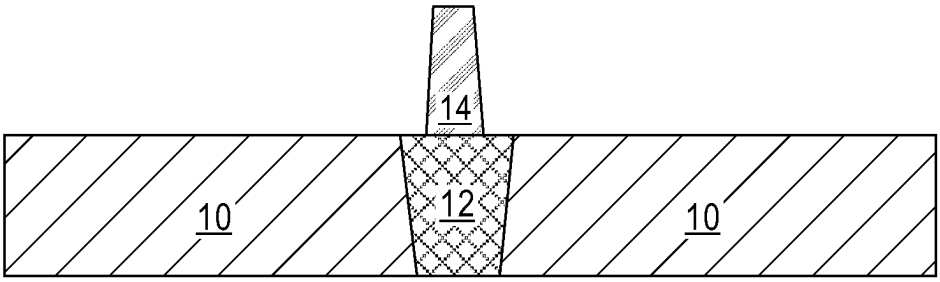

FIG. 2B

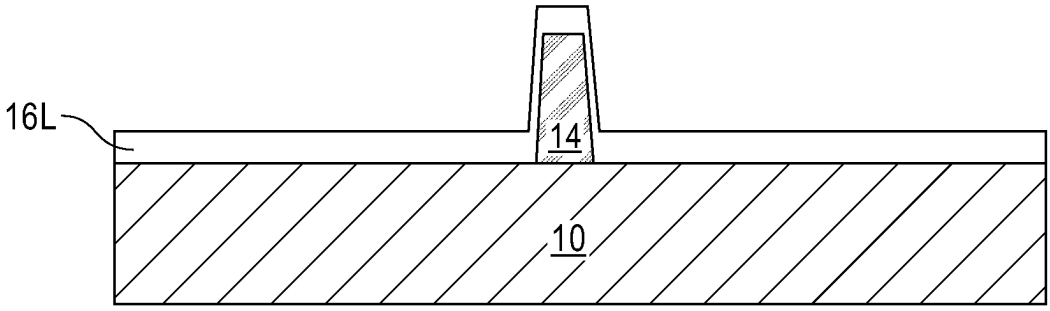

FIG. 3A

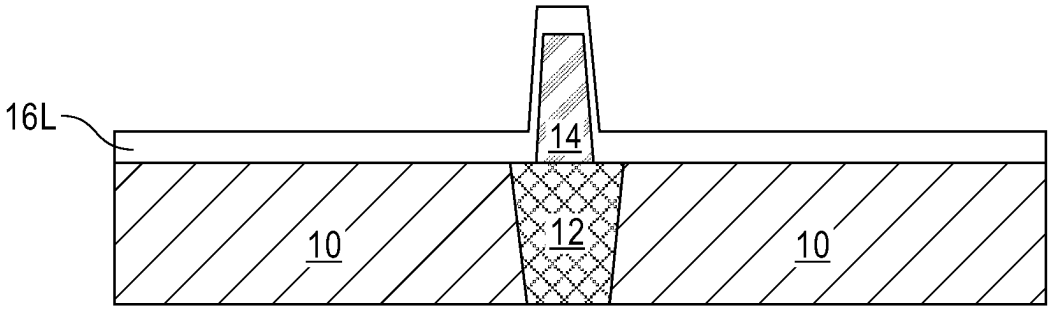

FIG. 3B

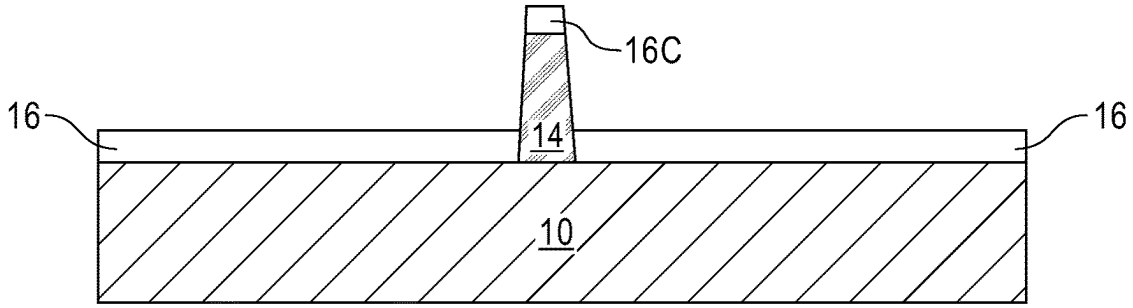

FIG. 4A

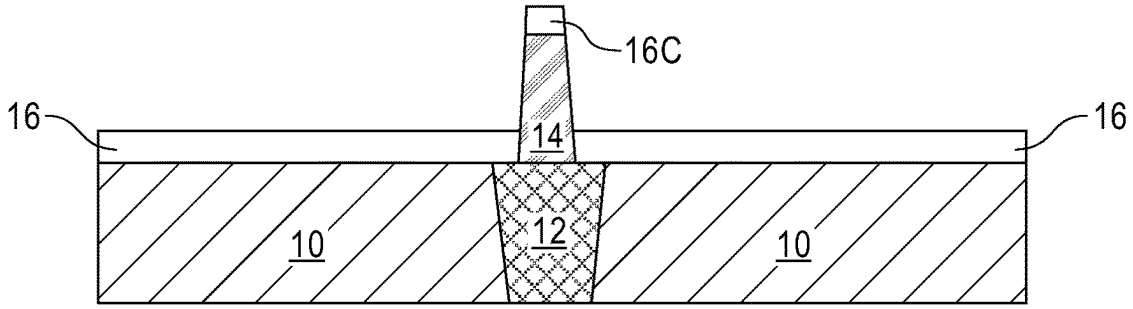

FIG. 4B

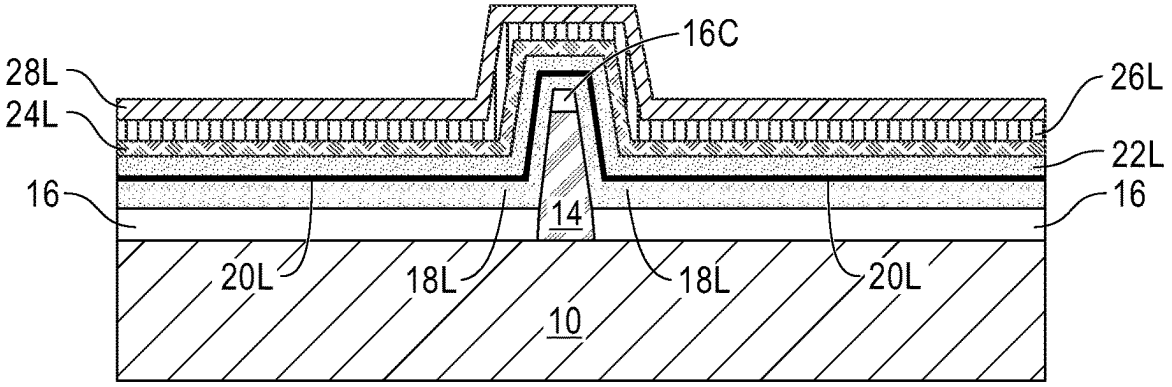

FIG. 5A

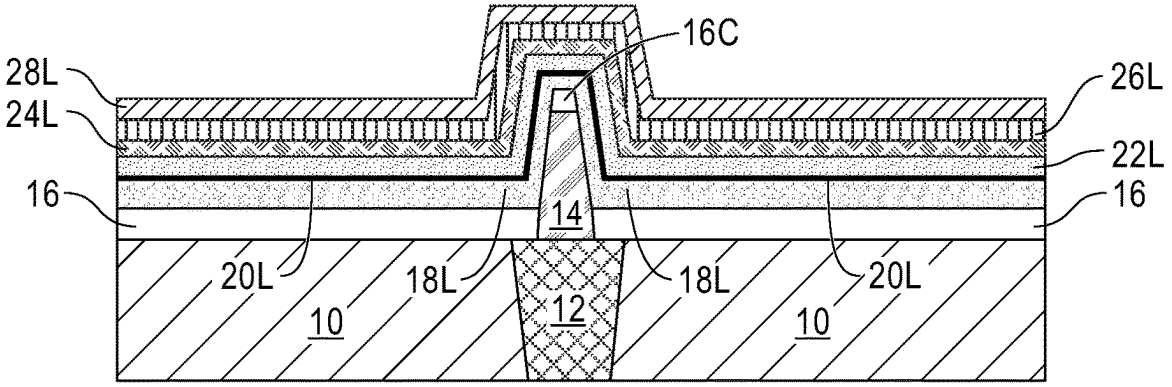

FIG. 5B

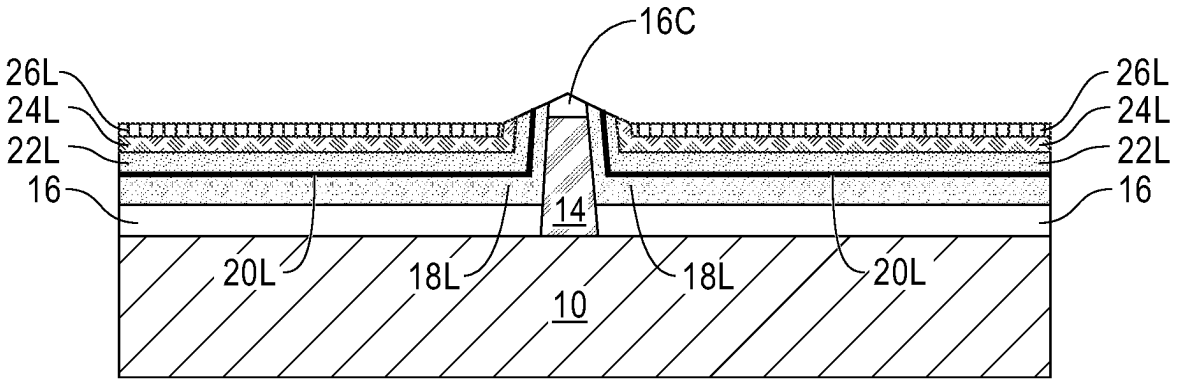

FIG. 6A

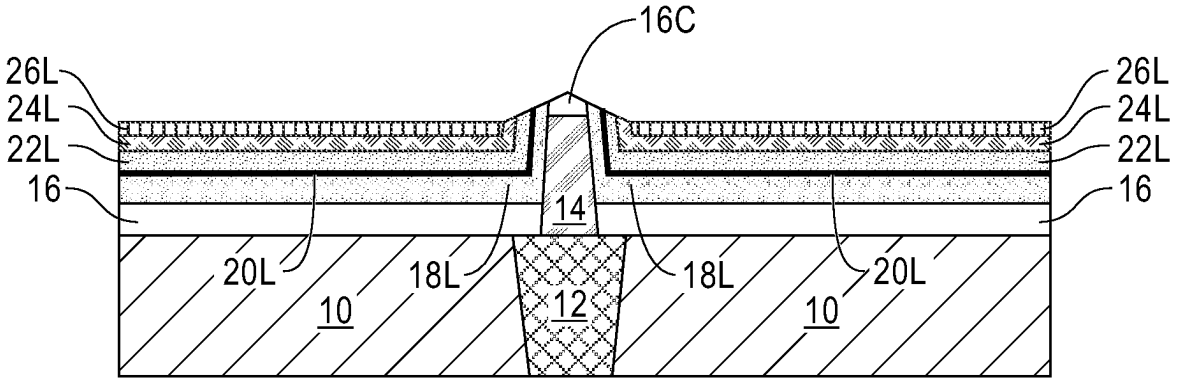

FIG. 6B

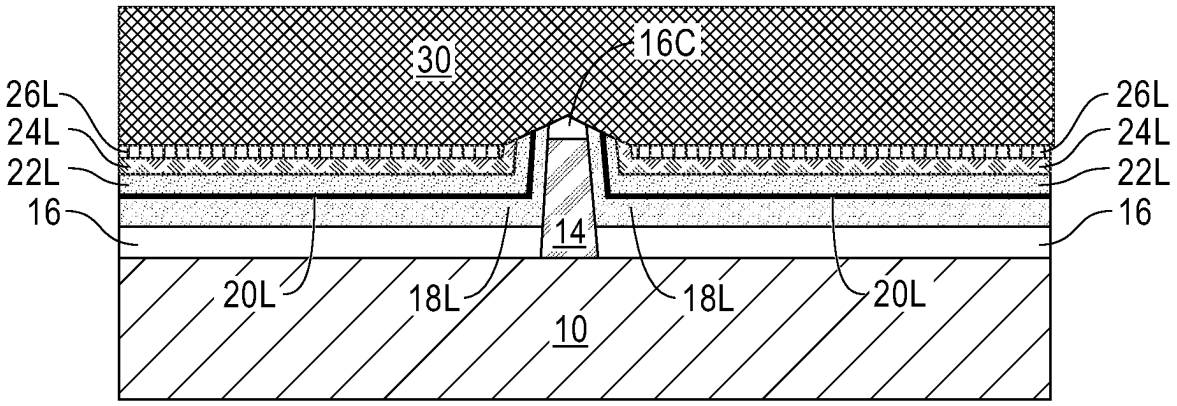

FIG. 7A

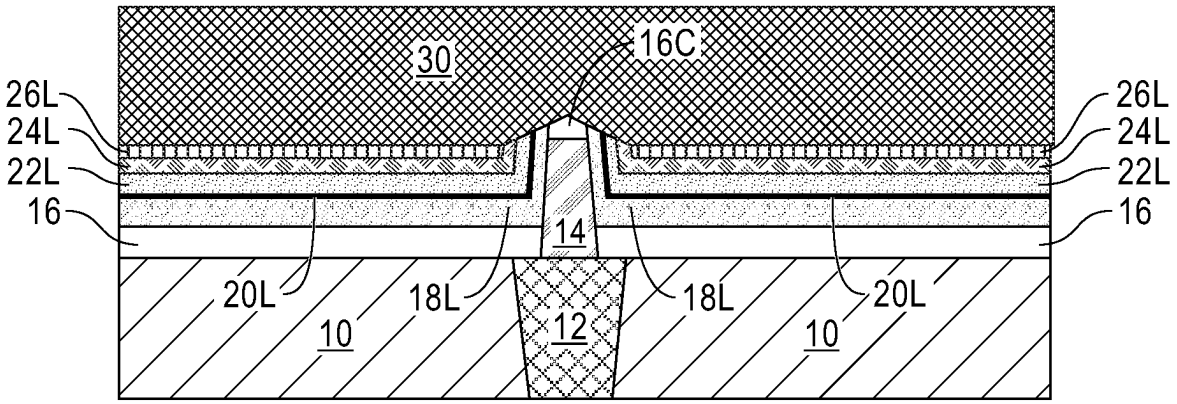

FIG. 7B

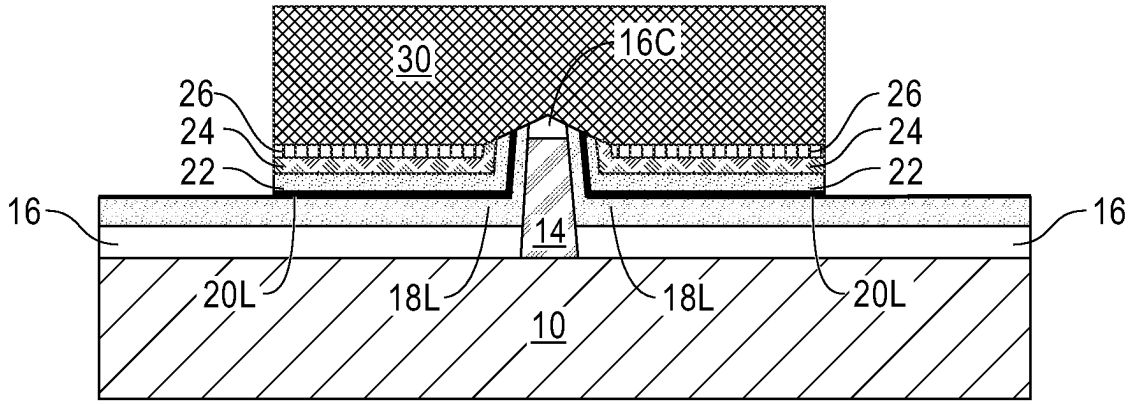

FIG. 8A

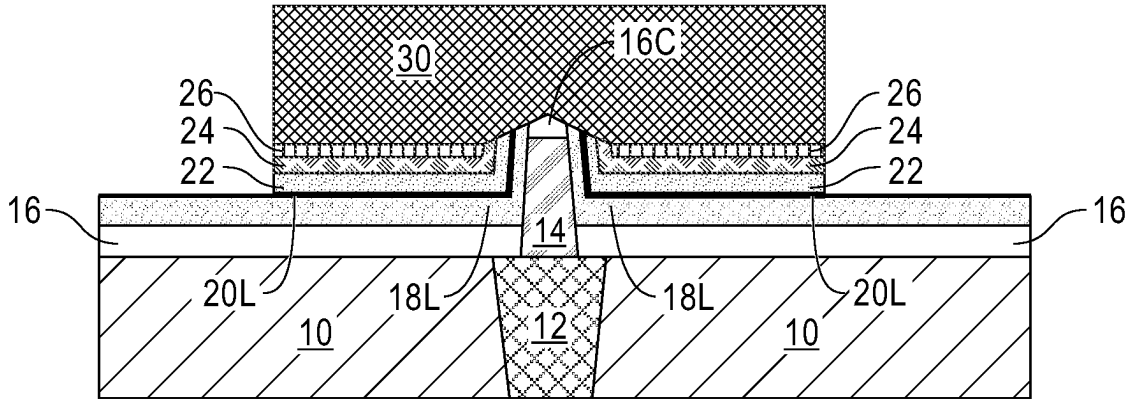

FIG. 8B

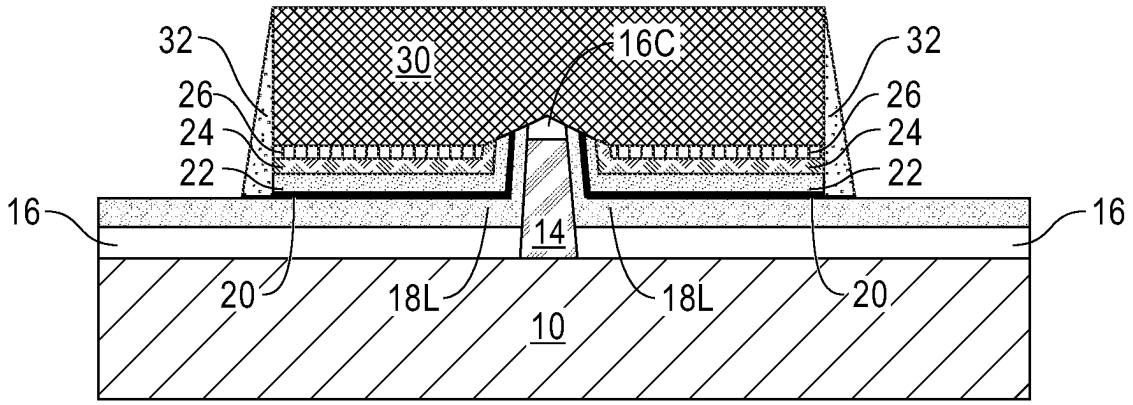

FIG. 9A

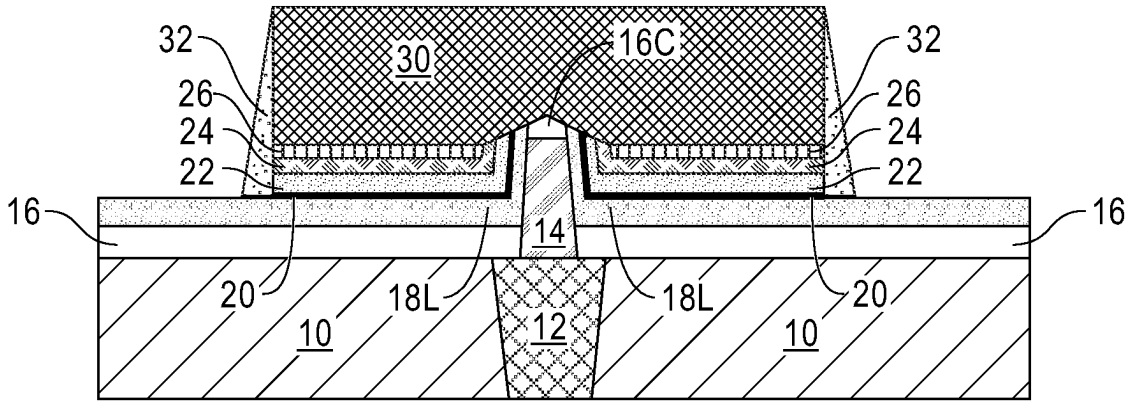

FIG. 9B

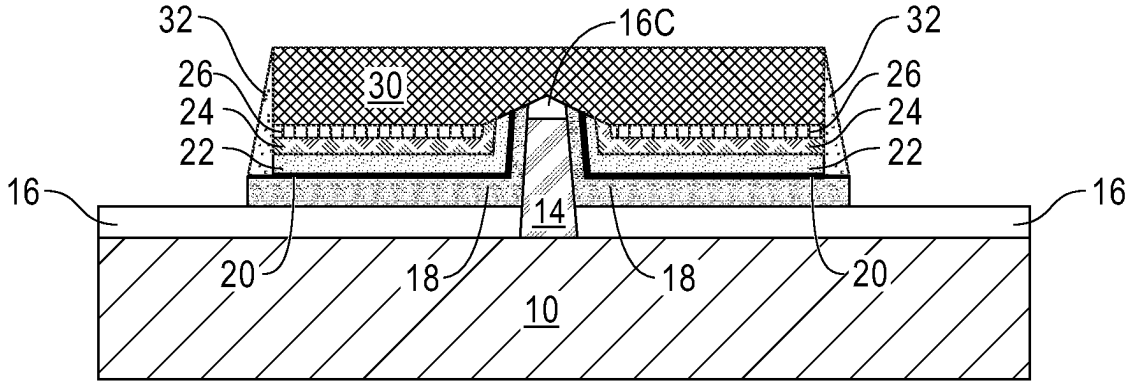

FIG. 10A

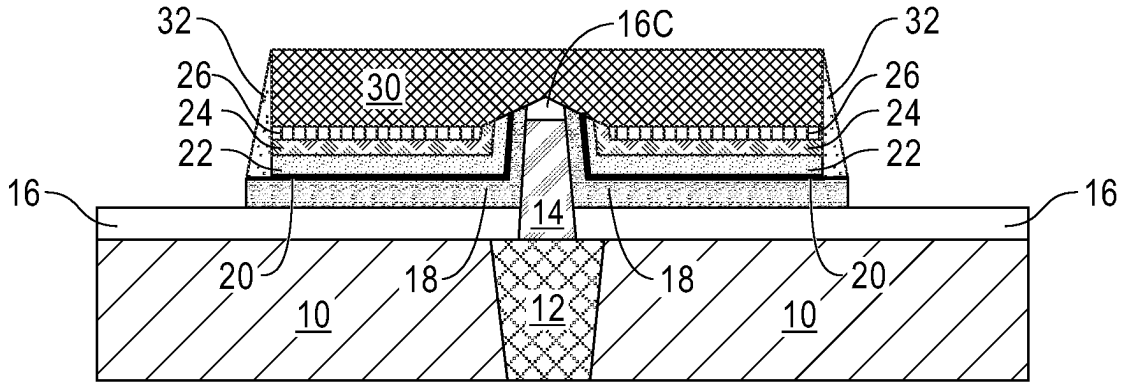

FIG. 10B

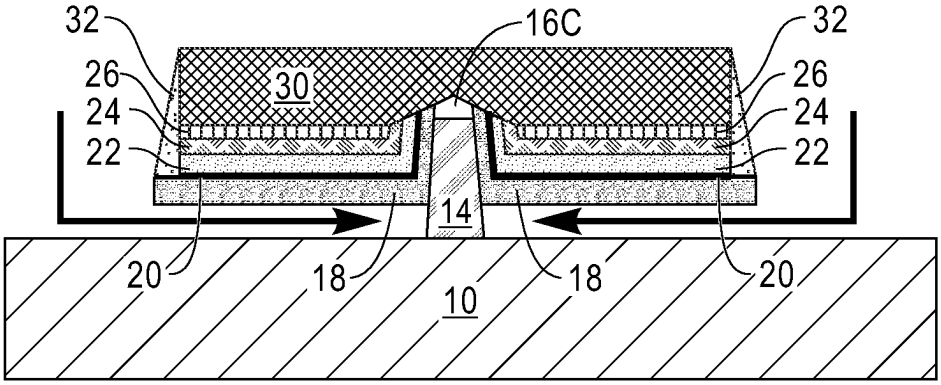

FIG. 11A

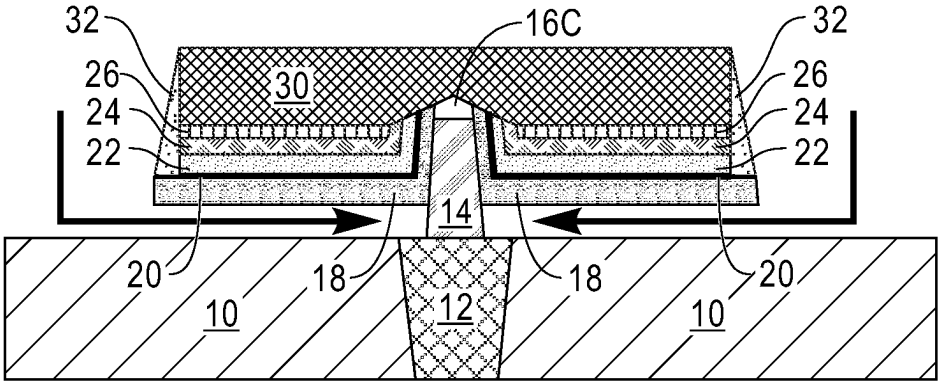

FIG. 11B

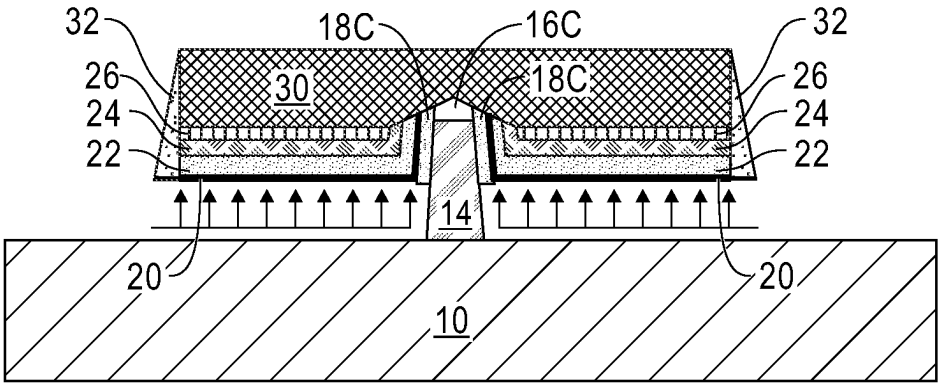

FIG. 12A

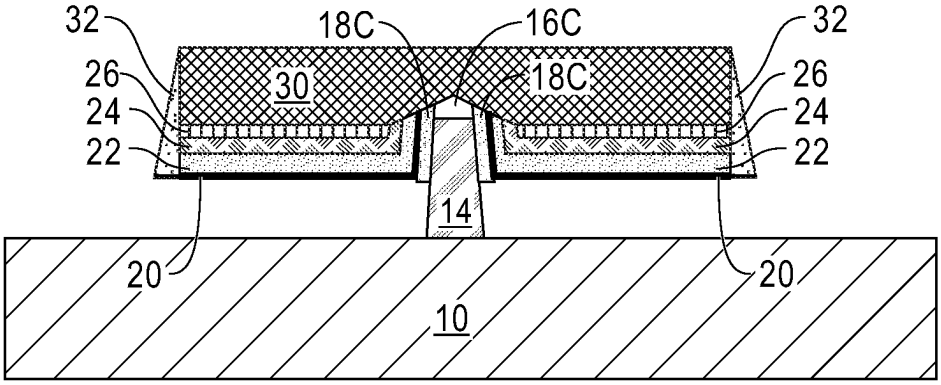

FIG. 12B

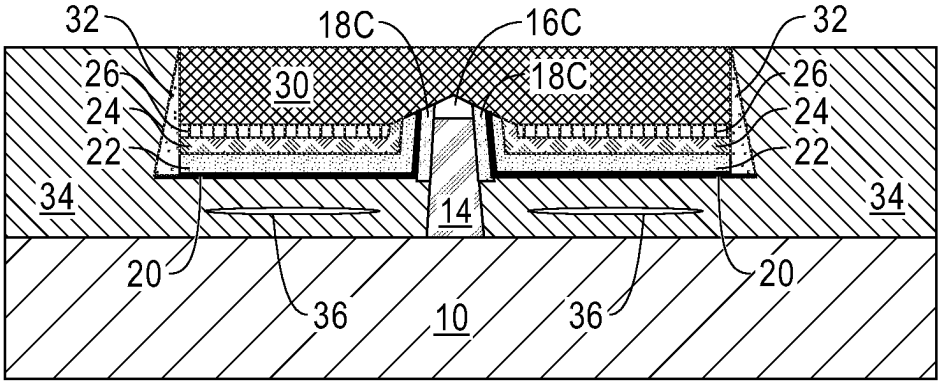

FIG. 13A

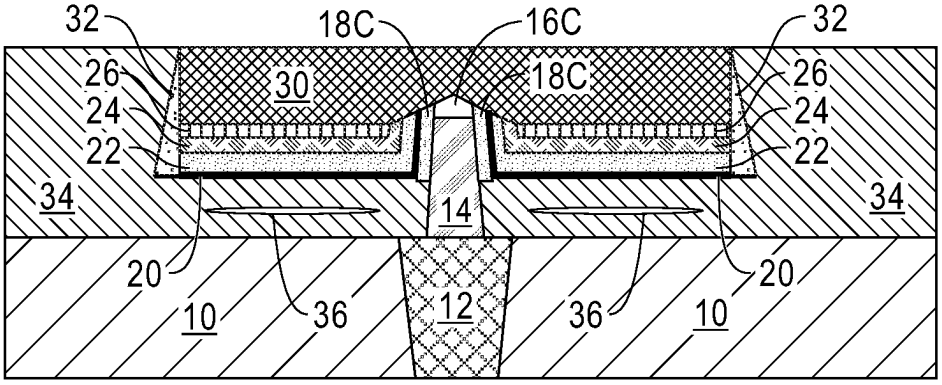

FIG. 13B

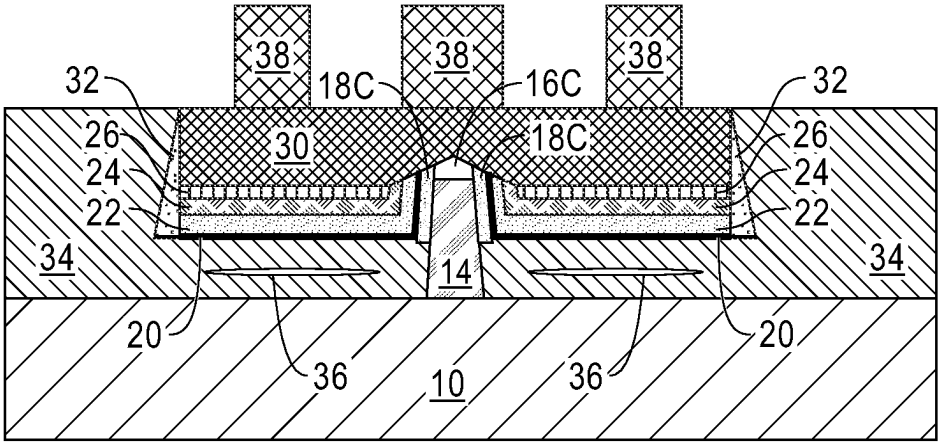

FIG. 14A

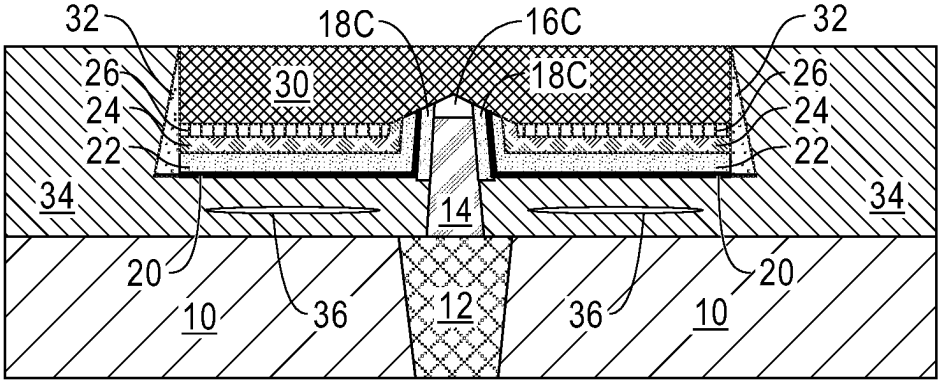

FIG. 14B

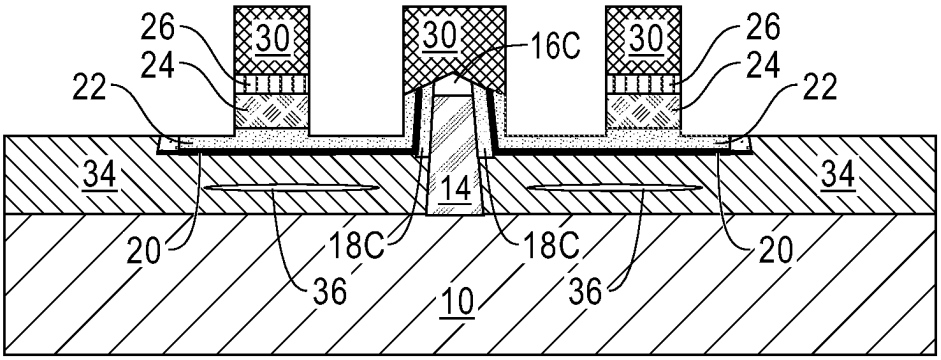

FIG. 15A

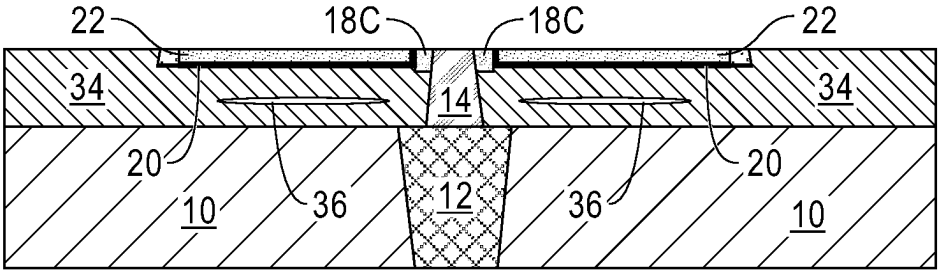

FIG. 15B

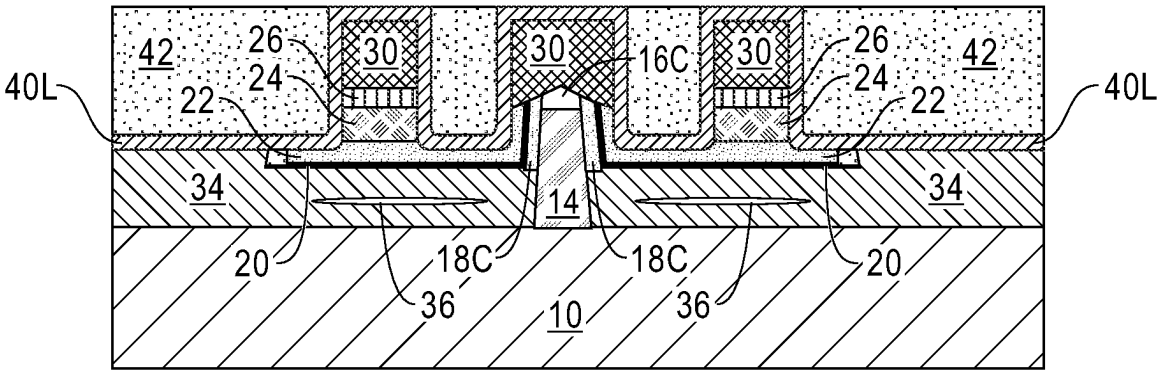

FIG. 16A

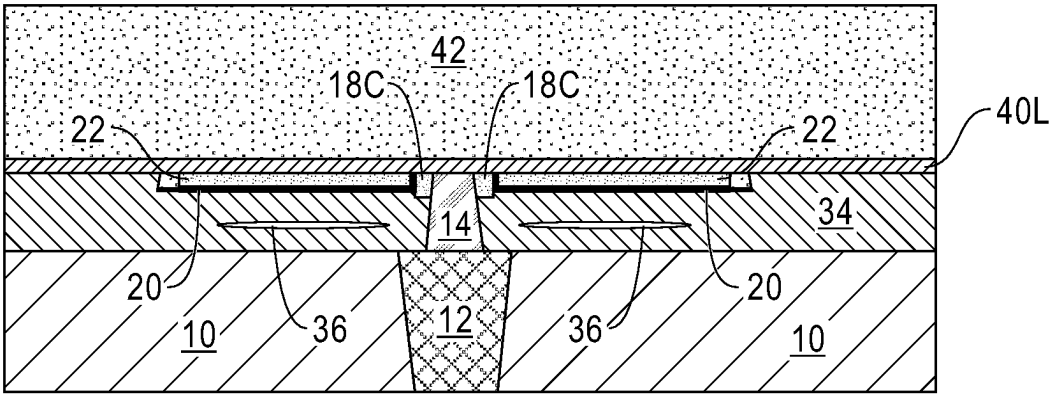

FIG. 16B

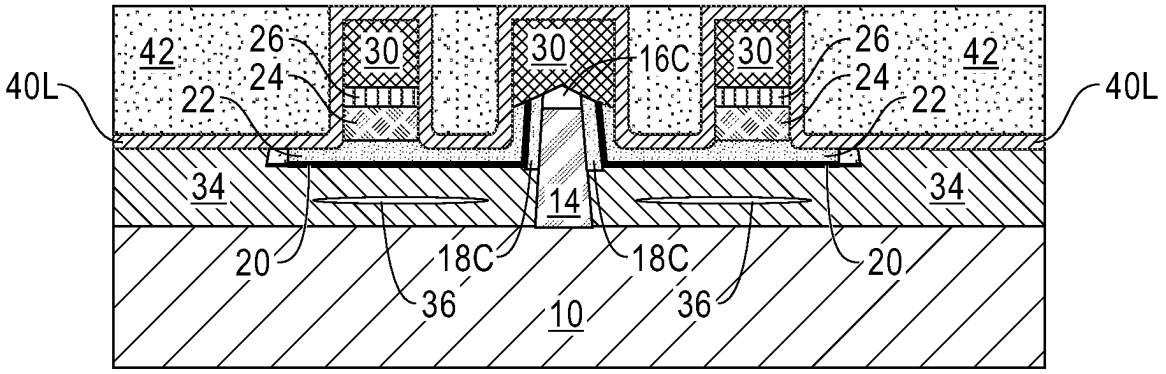

FIG. 17A

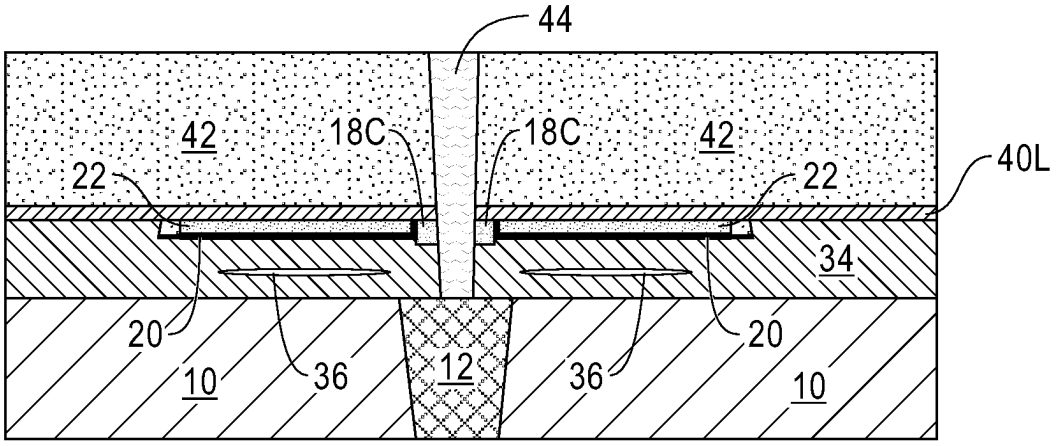

FIG. 17B

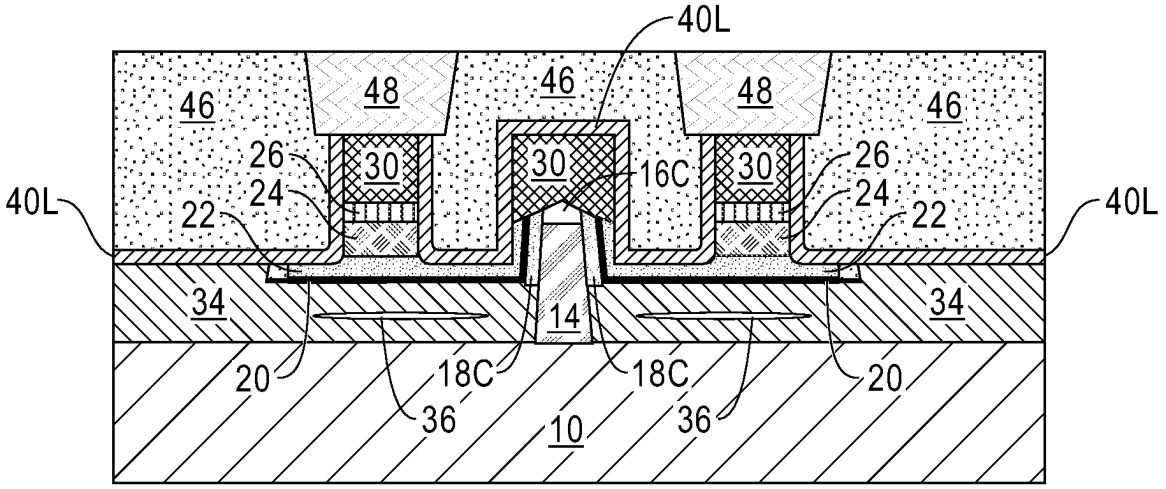

FIG. 18A

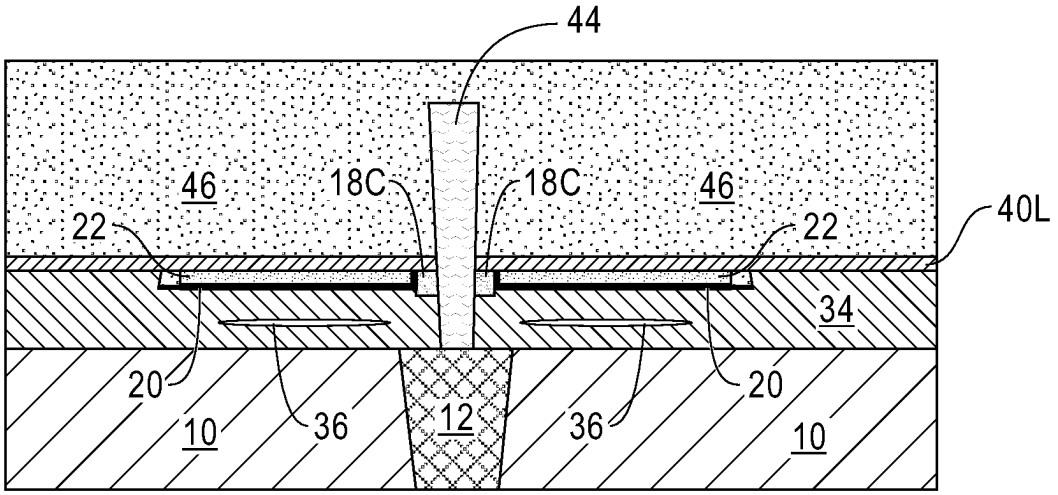

FIG. 18B

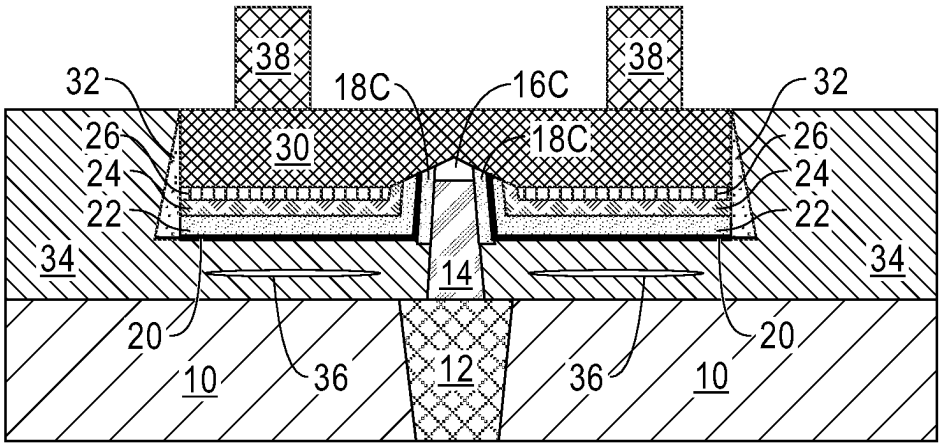

FIG. 19

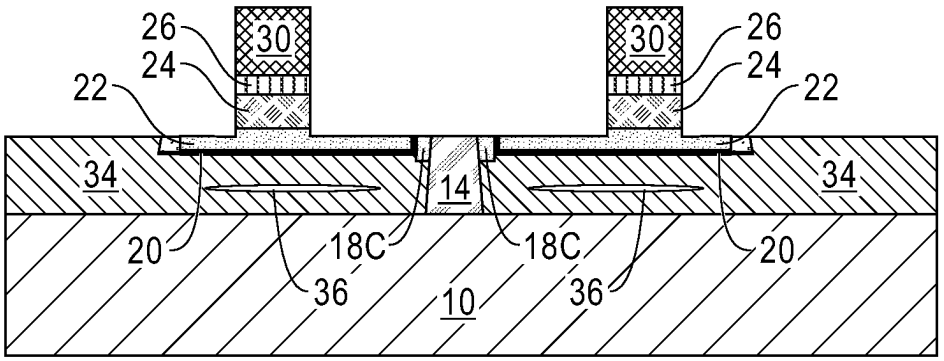

FIG. 20

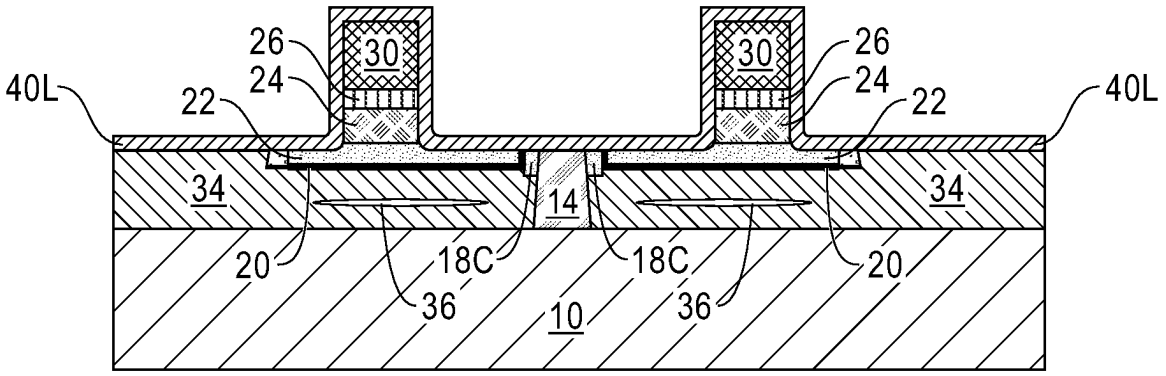

FIG. 21

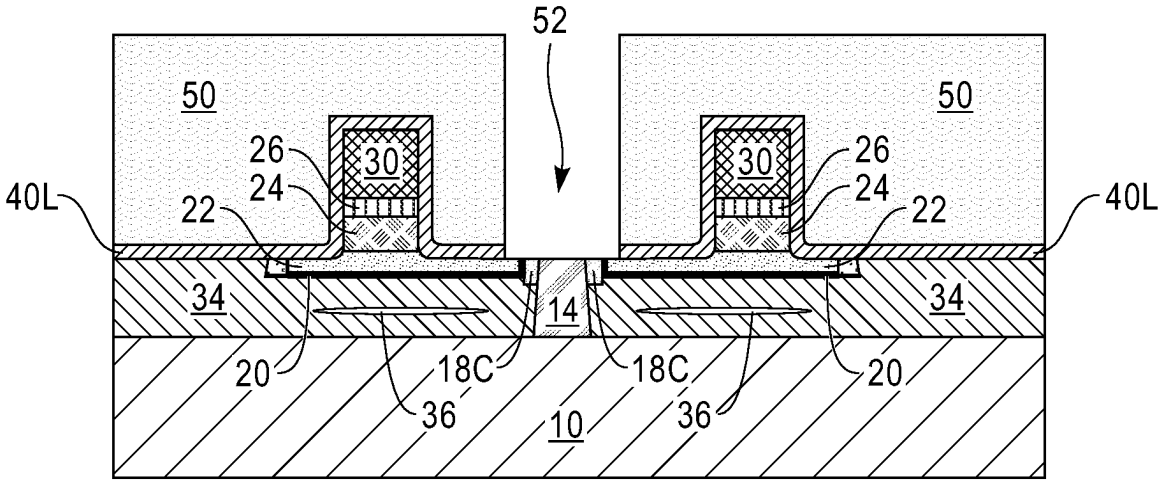

FIG. 22

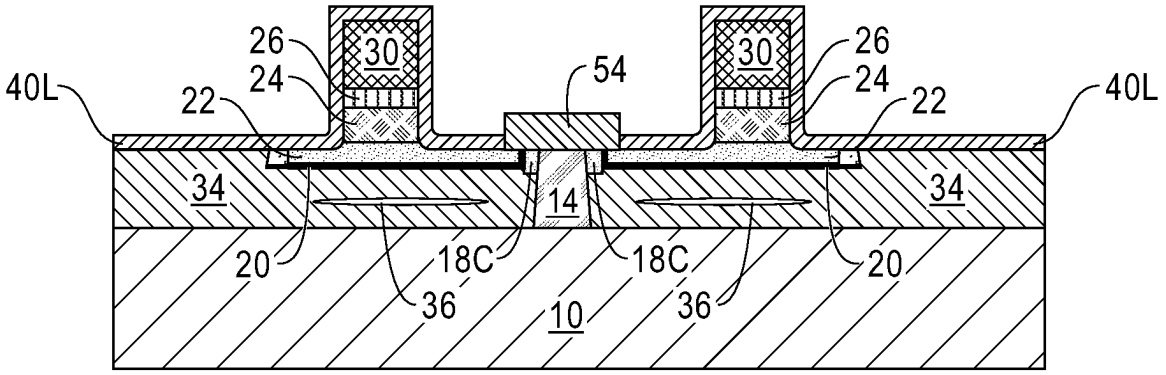

FIG. 23

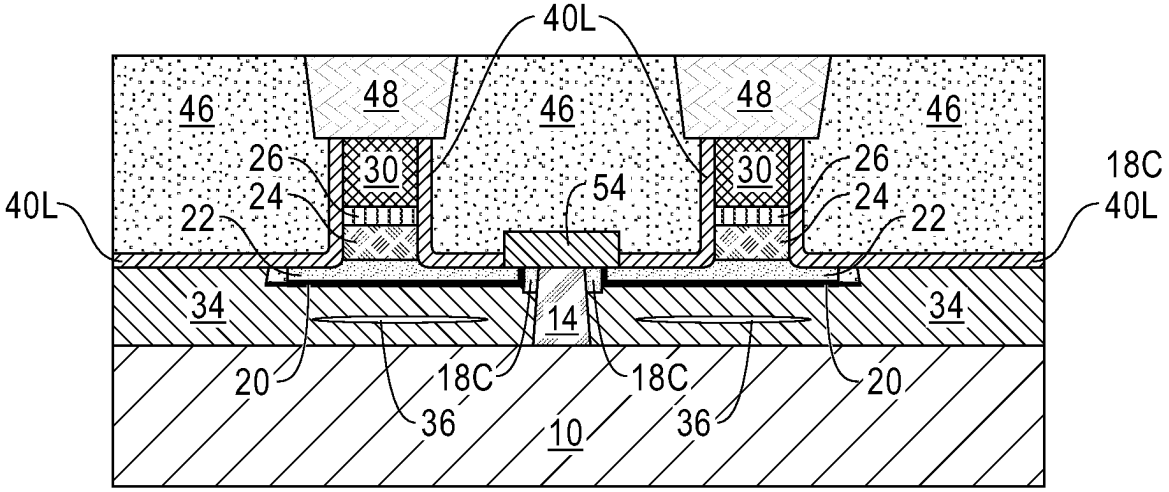

FIG. 24

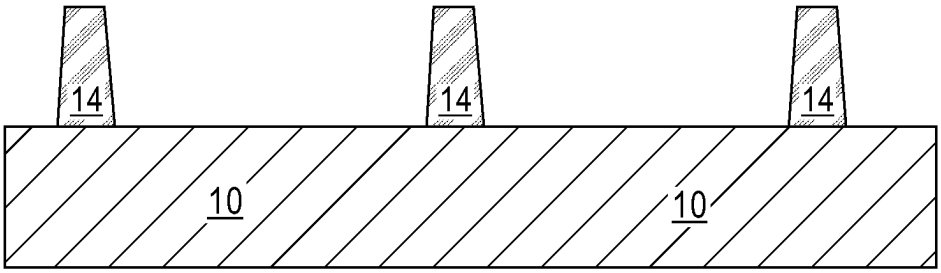

FIG. 25A

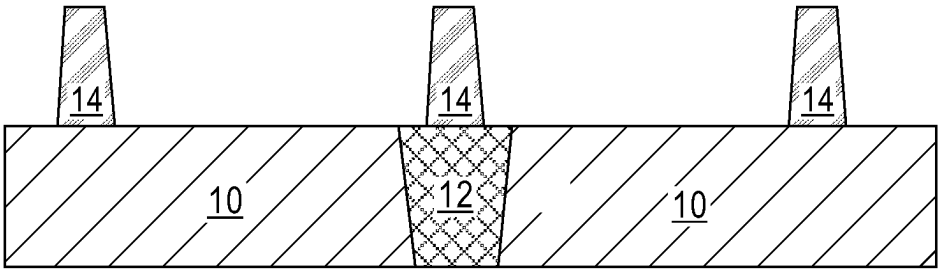

FIG. 25B

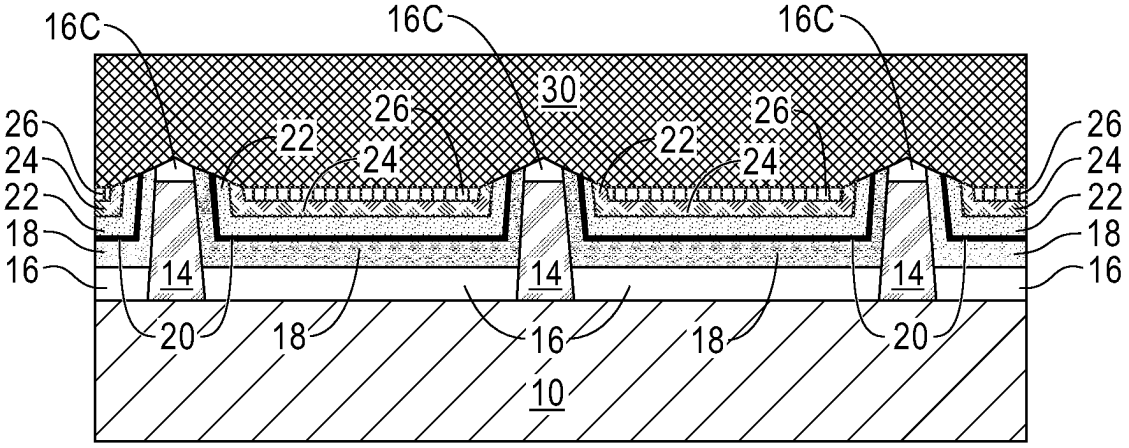

FIG. 26A

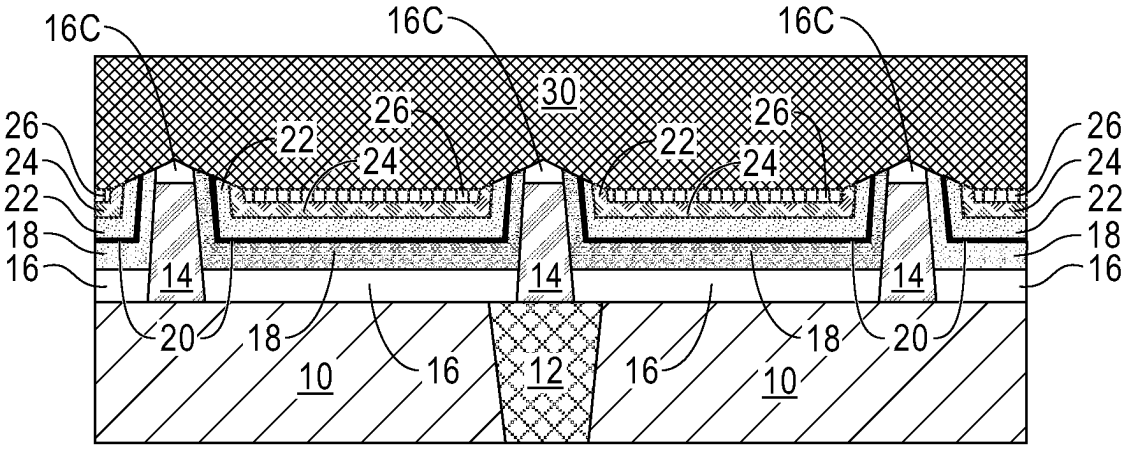

FIG. 26B

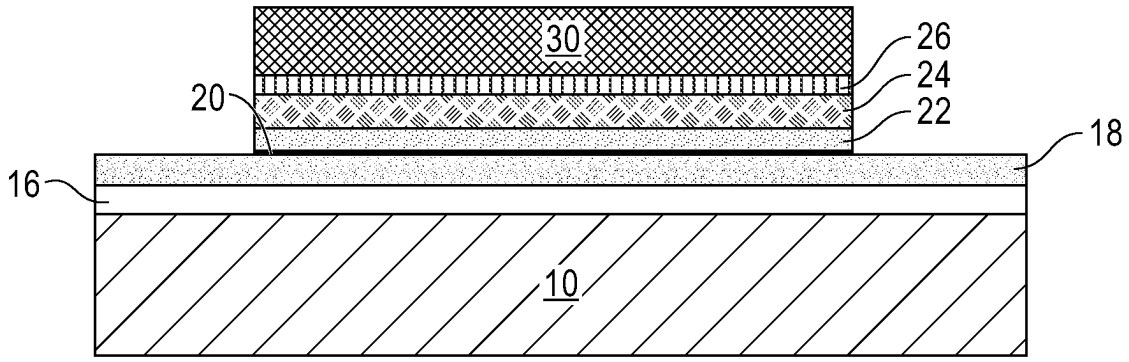

FIG. 26C

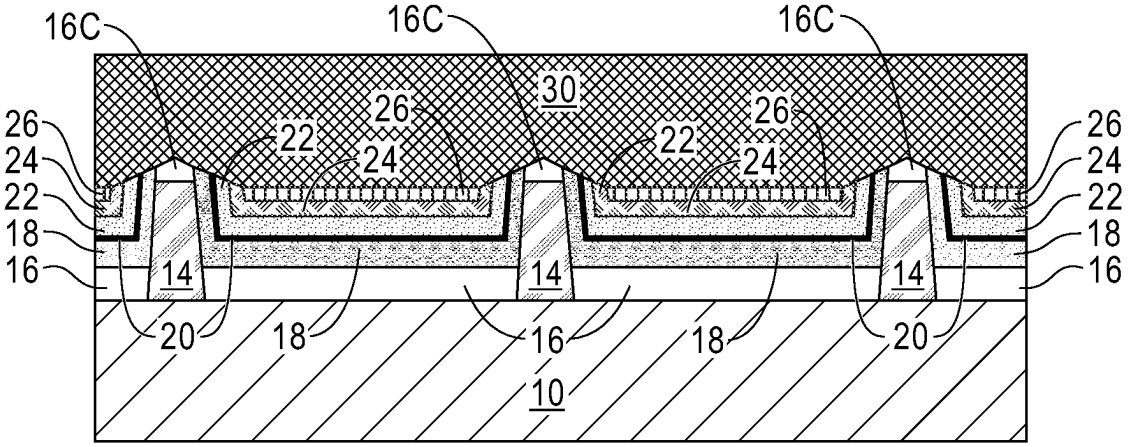

FIG. 27A

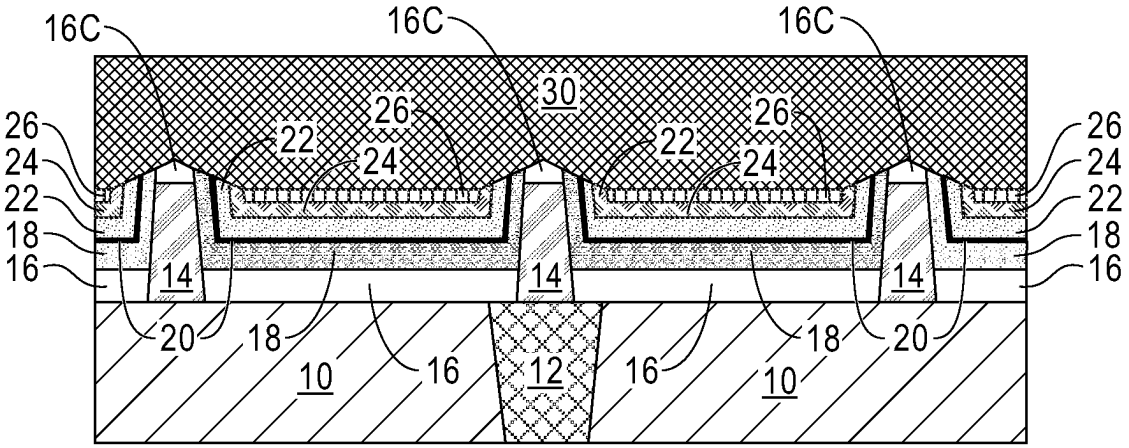

FIG. 27B

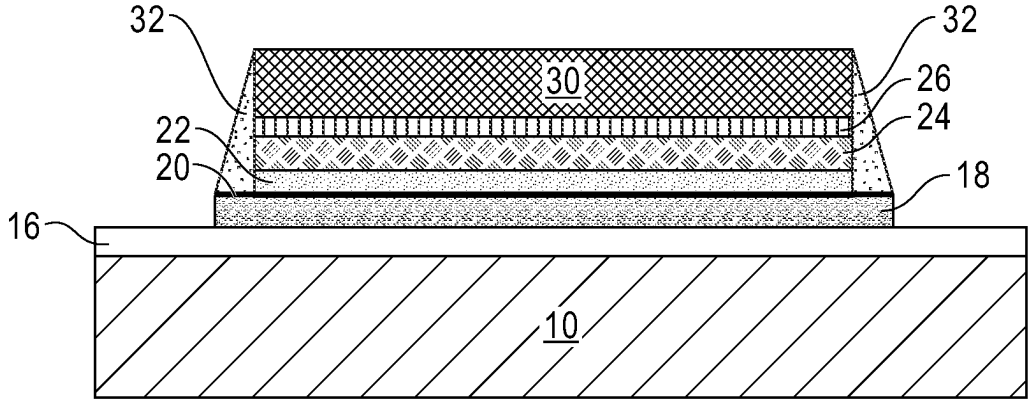

FIG. 27C

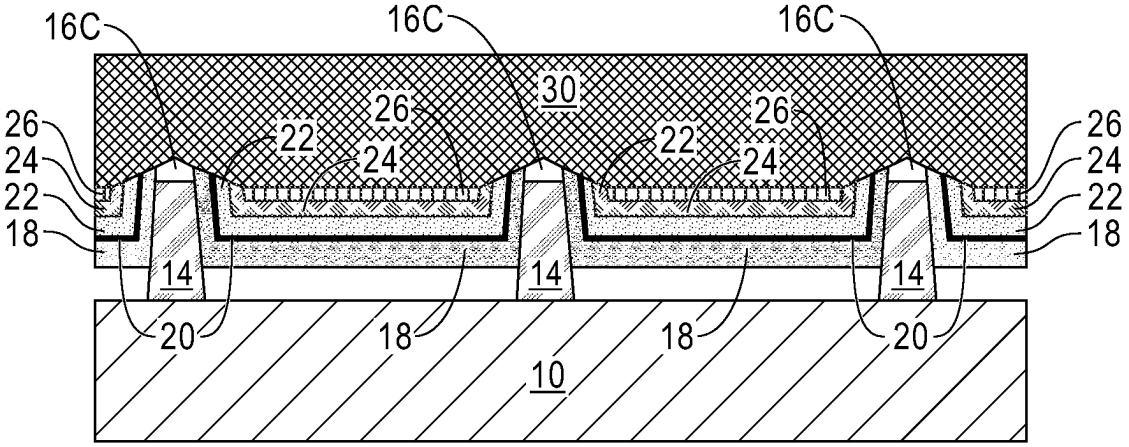

FIG. 28A

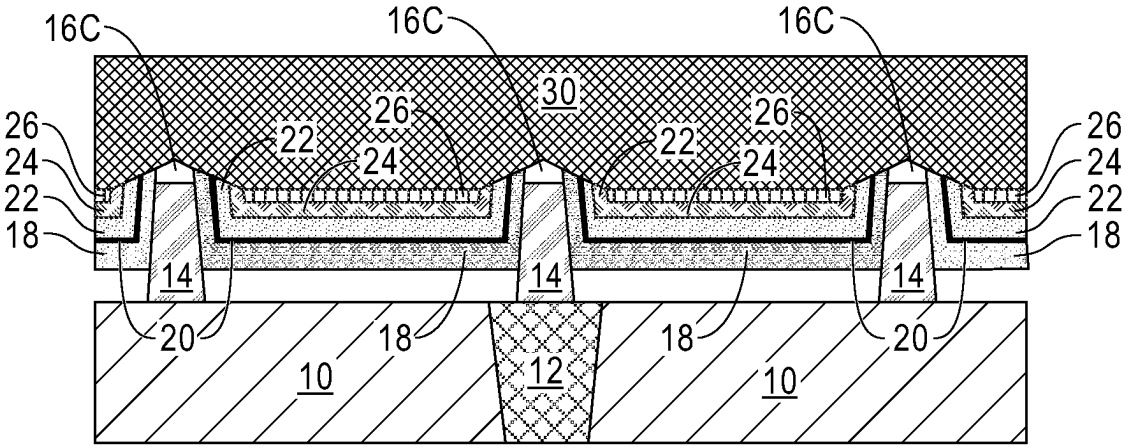

FIG. 28B

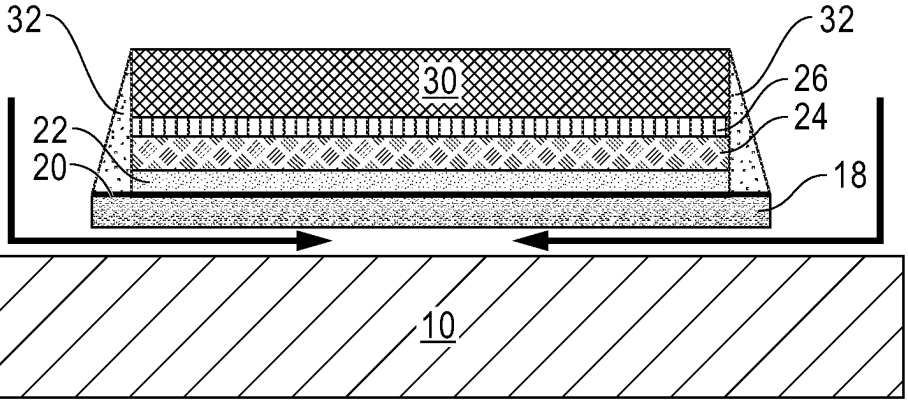

FIG. 28C

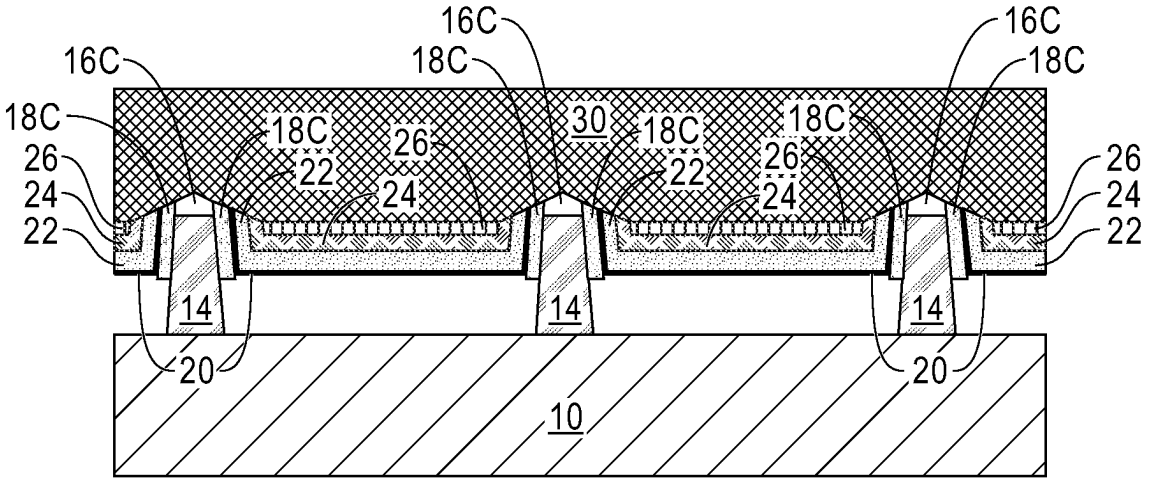

FIG. 29A

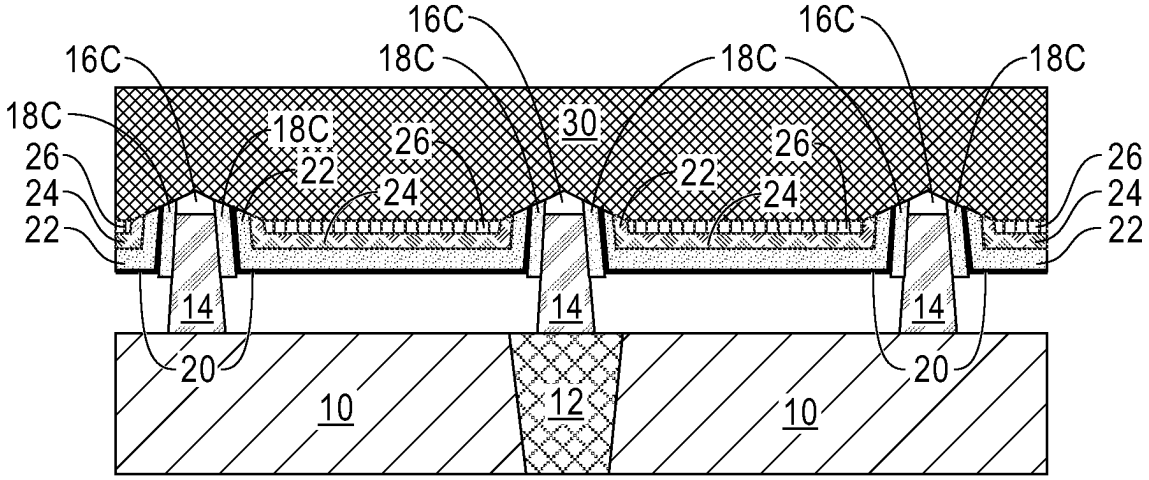

FIG. 29B

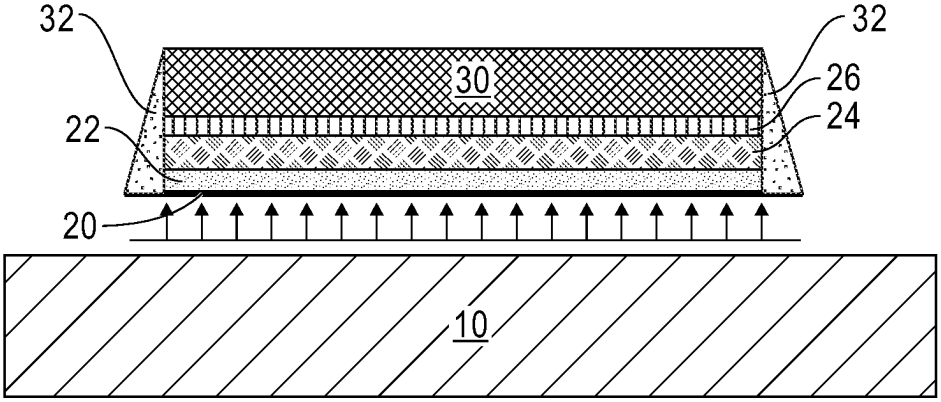

FIG. 29C

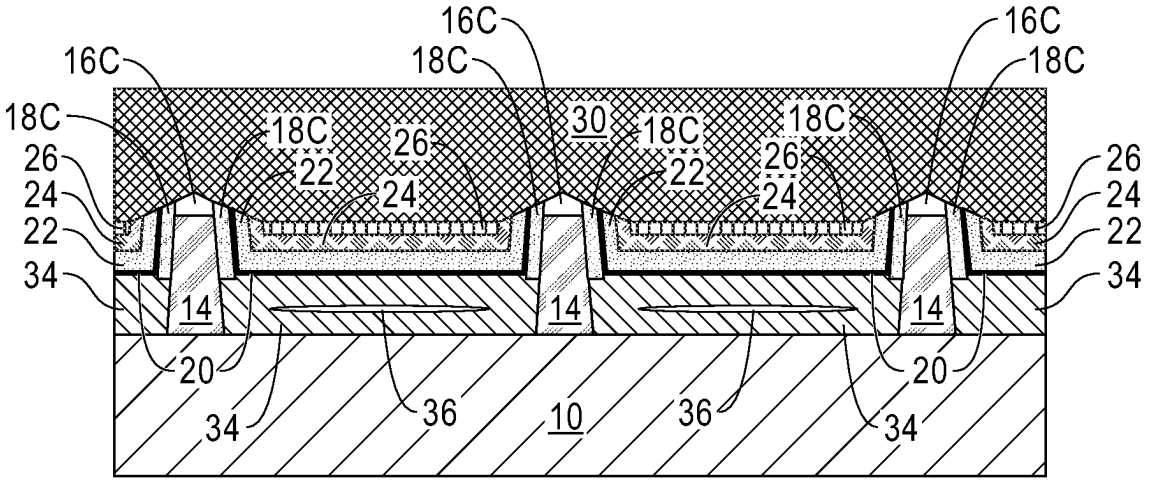

FIG. 30A

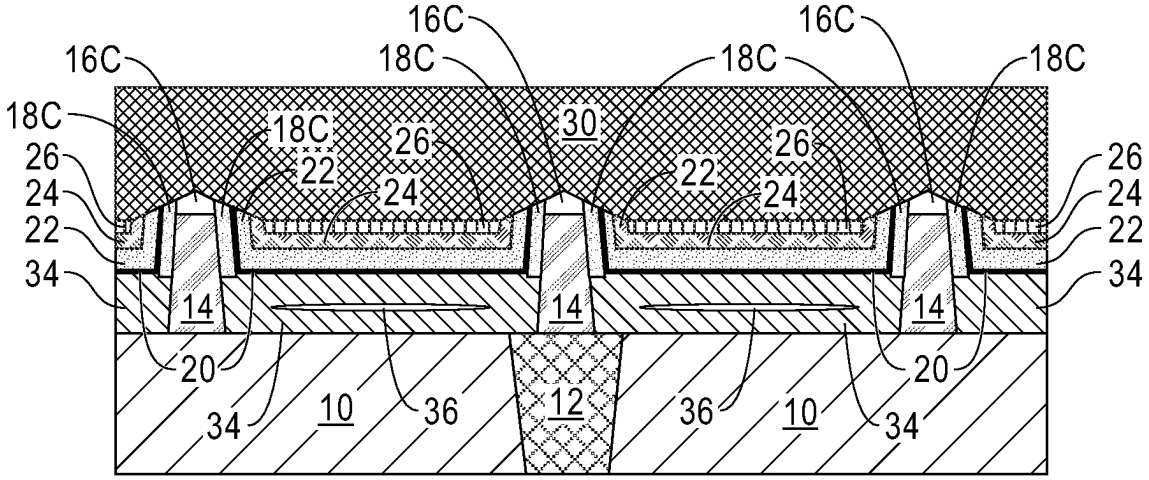

FIG. 30B

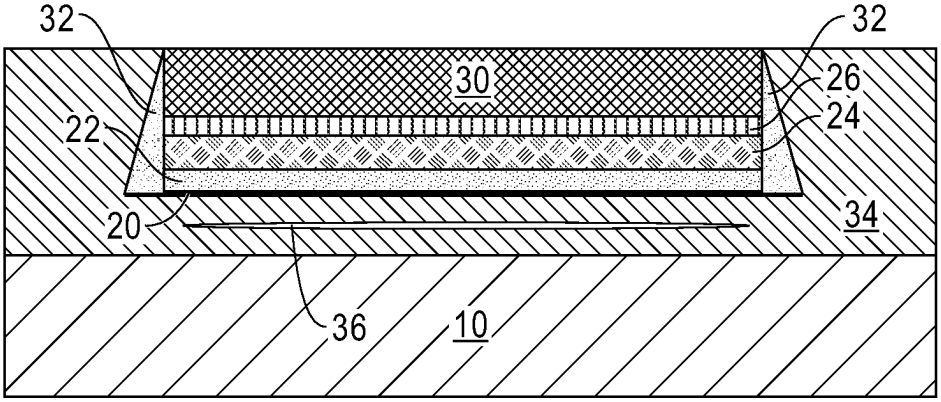

FIG. 30C

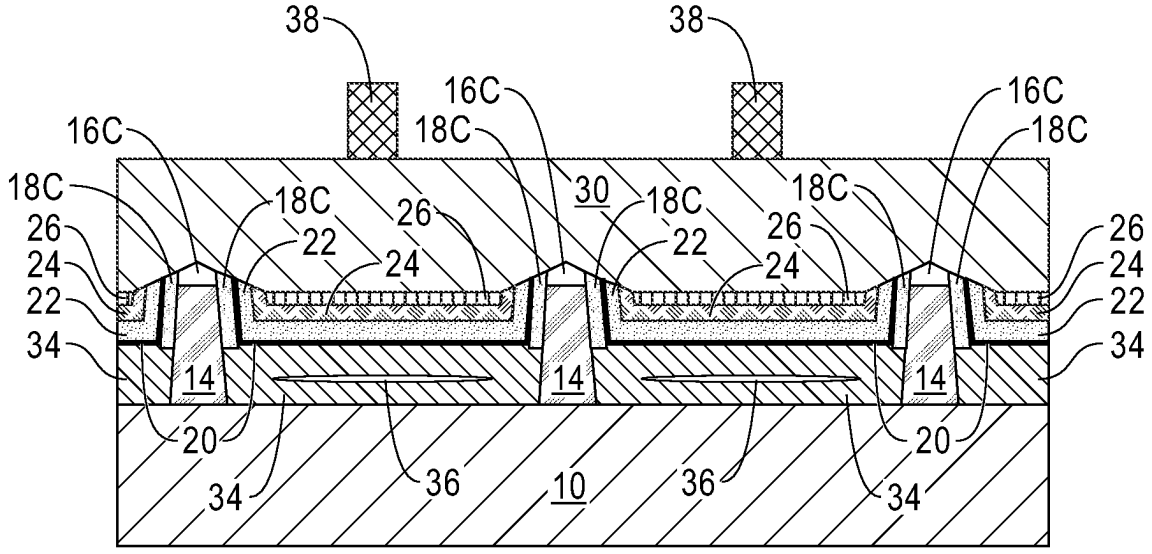

FIG. 31A

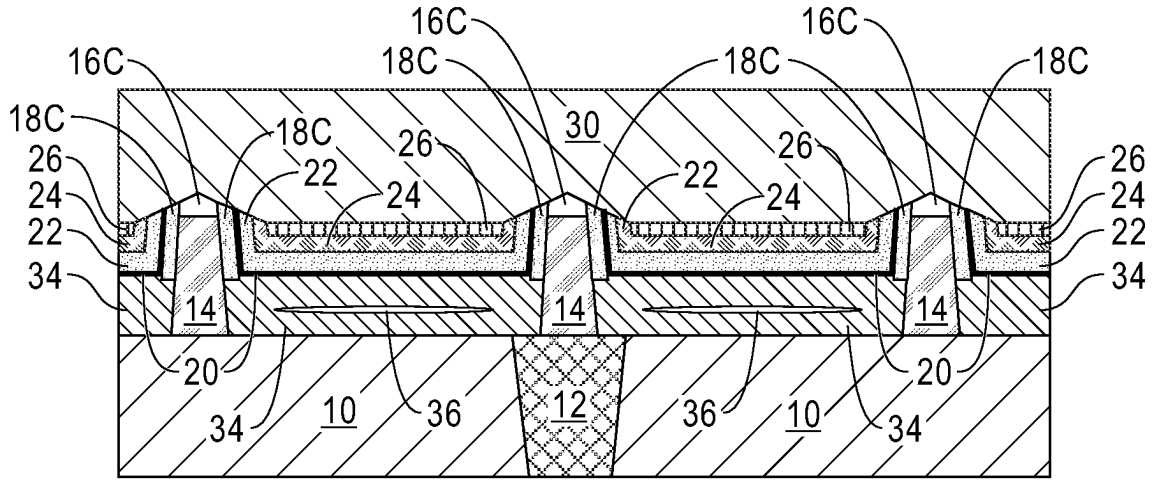

FIG. 31B

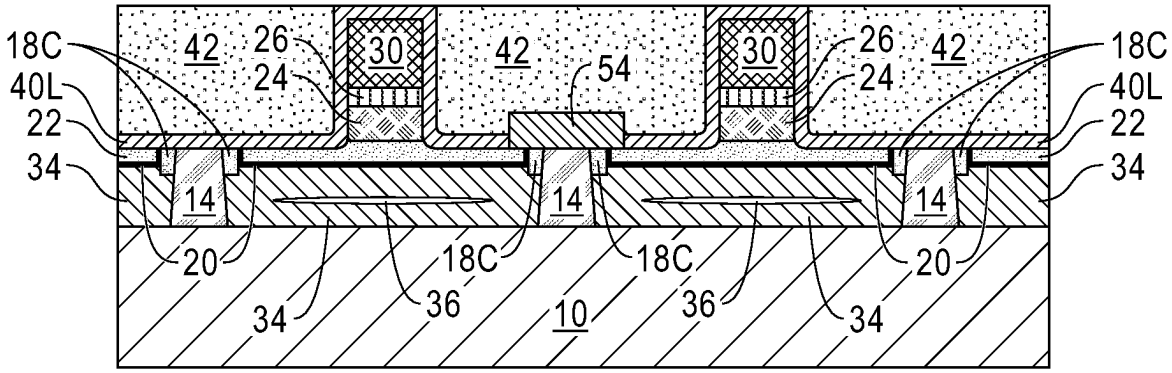

FIG. 32A

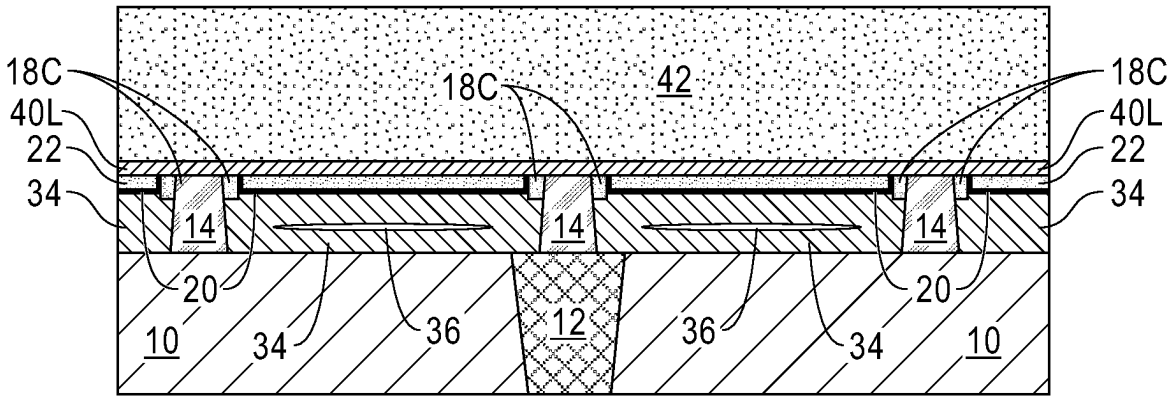

FIG. 32B

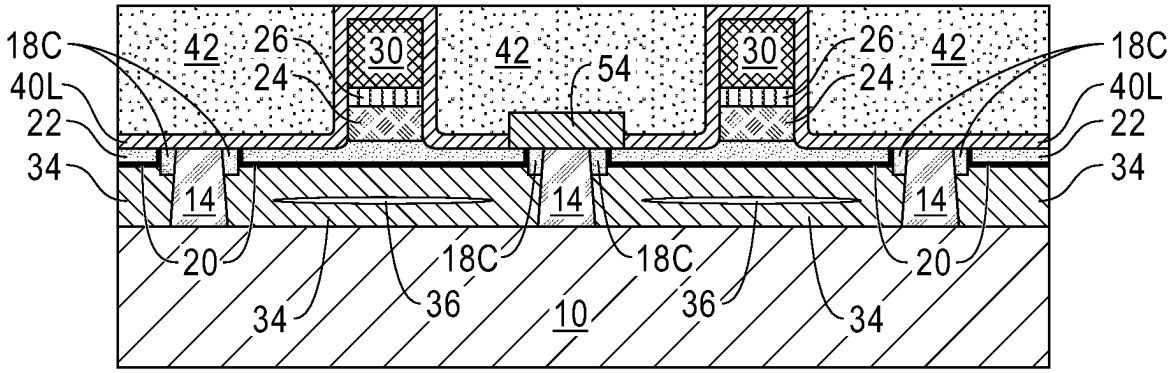

FIG. 33A

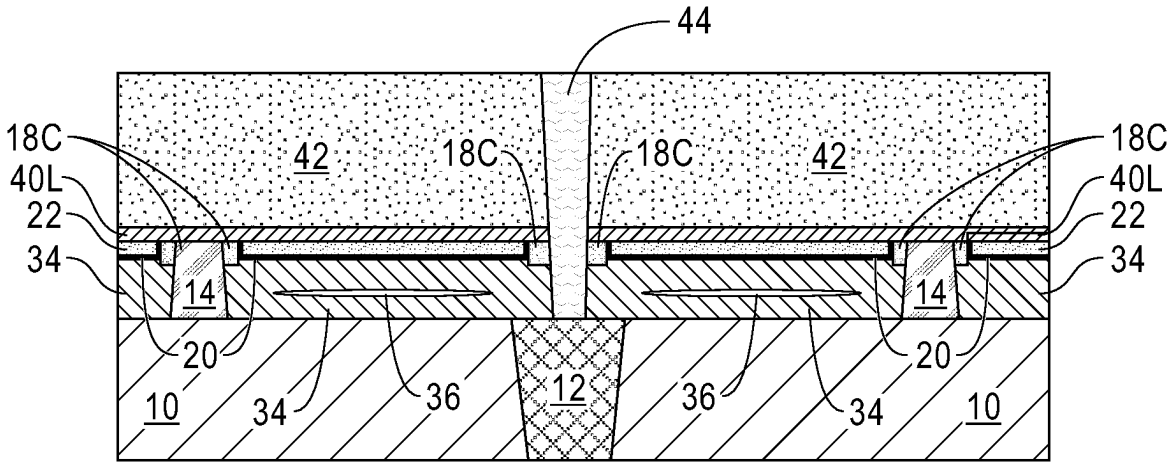

FIG. 33B

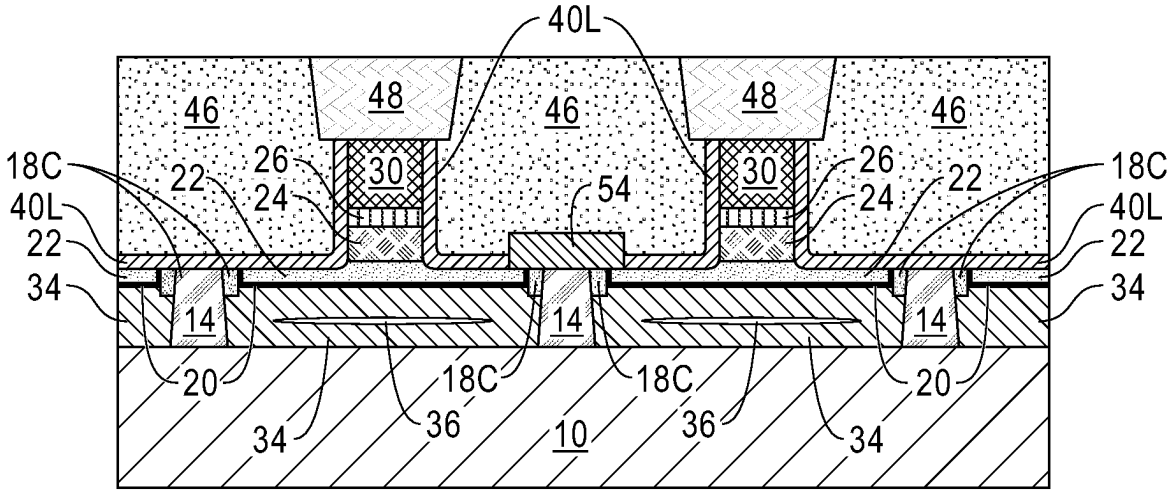

FIG. 34A

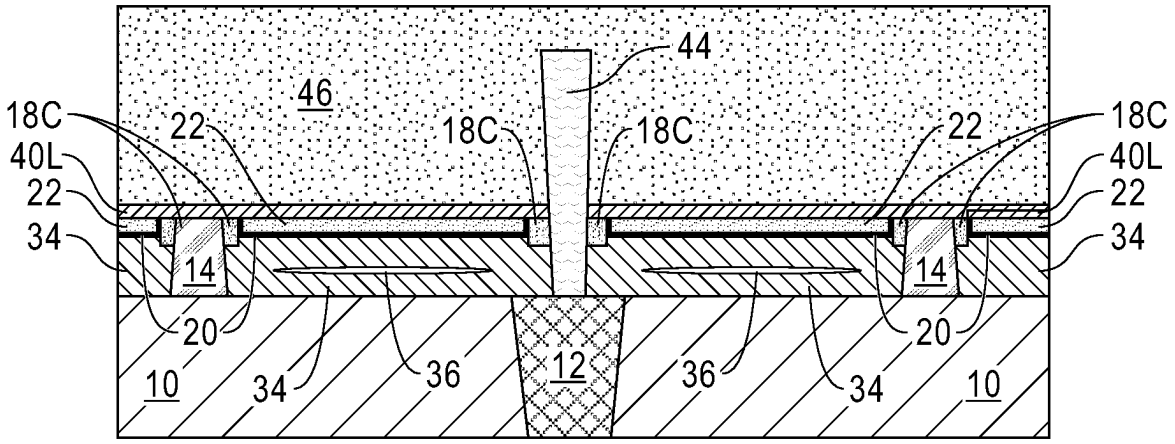

FIG. 34B

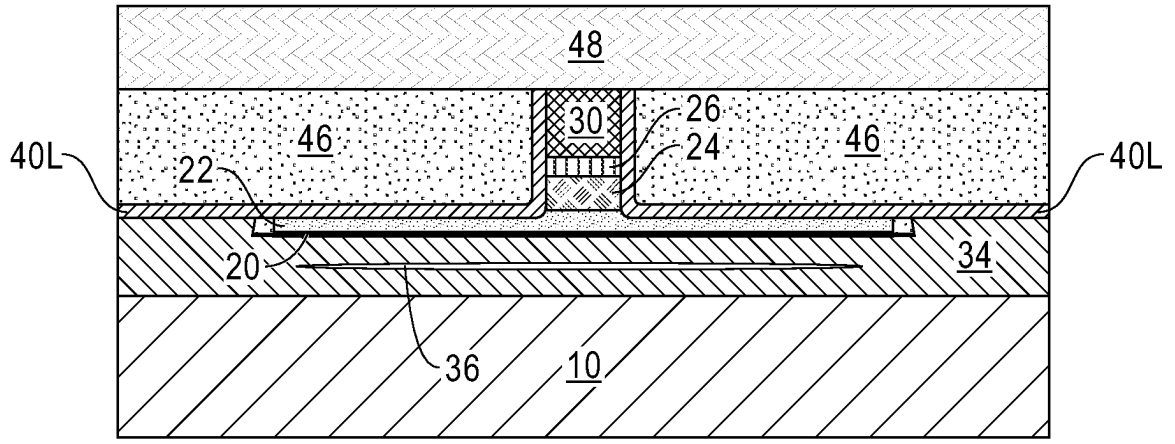

FIG. 34C

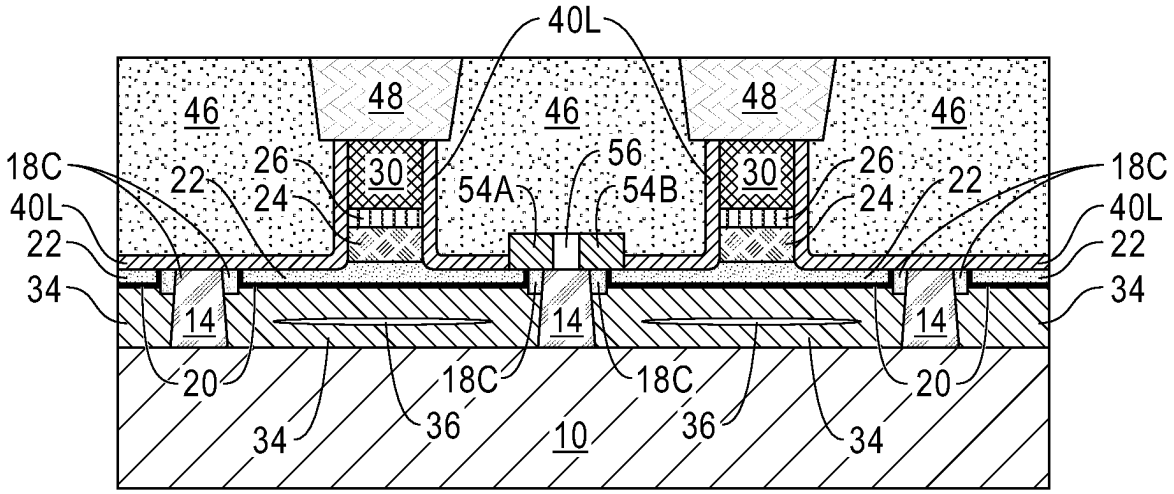
40L
48
46
48
46
18C
22
26
30
56
30
26
22
18C
40L
24
54A
54B
24
40L
22
22
34
14
14
14
34
20
18C
18C
20
34
36
10
36
34

FIG. 35

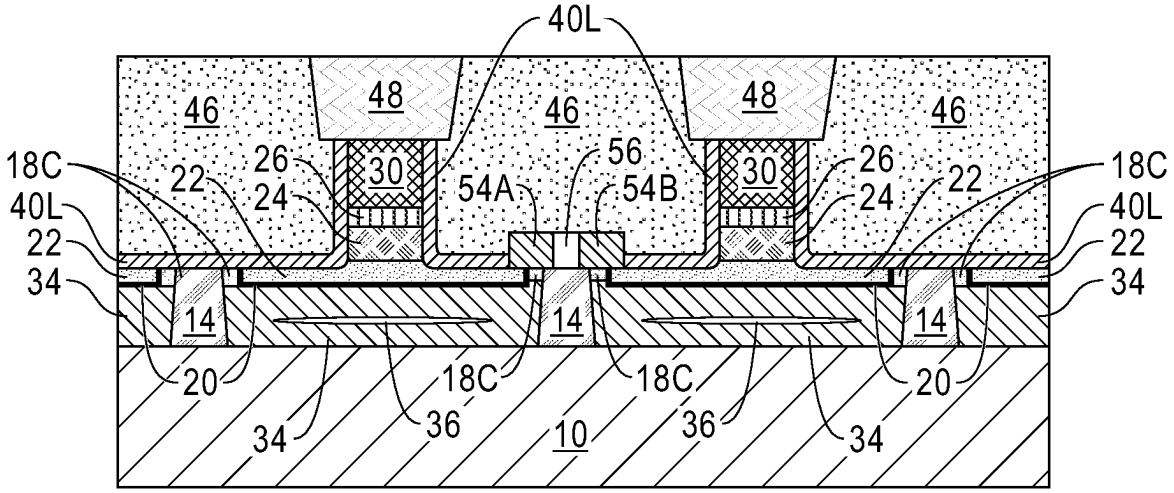
40L
48
46
48
46
18C
22
26
30
56
30
26
22
18C
40L
24
54A
54B
24
40L
22
22
34
14
14
14
34
20
18C
18C
20
34
36
10
36
34

FIG. 36

PERPENDICULAR SPIN-ORBIT TORQUE MAGNETIC RANDOM ACCESS MEMORY

BACKGROUND

[0001] The present application relates to a memory structure, and more particularly to a spin-orbit torque magnetic random access memory (SOT MRAM) structure with a perpendicular magnetic free layer magnetization.

[0002] There is a need for further reduction of write current in a magnetic tunnel junction (MTJ) used in spin-transfer torque magnetic random access memories (STT-MRAM), especially for applications in embedded memory technology requiring sub 10 ns switching. Since a device physics imposed minimum switching spin-current exists that is today practically on the order of 30-60 μA for approximately 10 ns speed switching in charge current unit, for further reduction of switching charge-current, better conversion to perpendicularly polarized spin-current from a charge current structure is necessary.

[0003] Spin-orbit torque (SOT) related charge-to-spin current conversion has shown feasibility for large charge to spin current conversion efficiency. However, most materials' interface-crossing spin-current from spin-orbit action limits the spin-polarization in the plane of the interface the spin-current crosses. For most efficient spin-current driven magnetic switching utilizing the so-called "anti-damping" switching, it is desirable to have the spin-current polarization in the direction of the easy-axis for the switching magnet's moment. Since high density STT-MRAMs utilize MTJs with perpendicularly magnetized free layer (FL) moment, it is incompatible with an SOT-generated spin current whose polarization lies in the film-plane, making SOT generated spin-current difficult to use for STT-MRAM technology. Further, it is necessary to have high spin conductance between an SOT conductor and that of the ferromagnet one desires to switch, which often requires direct high quality interface contact between the SOT conductor and the ferromagnet that forms the magnetic free layer of the MTJ structure. When both are good electrical conductors, this could cause sizable charge current shunting, reducing the net charge-to-spin current conversion efficiency from the SOT.

SUMMARY

[0004] A SOT MRAM structure is provided that includes a unique sidewall SOT structure that enables perpendicular magnetic free layer magnetization.

[0005] In one aspect of the present application, a SOT MRAM structure with perpendicular magnetic free layer magnetization is provided. In one embodiment of the present application, the SOT MRAM structure includes a spin conductor charge insulator layer having a horizontal portion and a vertical portion, and a spin conductor layer contacting the horizontal portion of the spin conductor charge insulator layer and a first sidewall of the vertical portion of the spin conductor charge insulator layer. The SOT MRAM structure further includes a MTJ structure including a magnetic free layer, a magnetic tunnel barrier layer, and a magnetic reference layer in which the magnetic free layer is in direct physical contact with the spin conductor layer. The SOT MRAM structure further includes a MTJ cap contacting the MTJ structure, a MRAM electrode-containing hard mask contacting the MTJ cap and an I-shaped SOT channel located on a second sidewall of the vertical portion of the spin conductor charge insulator layer and having a bottommost surface that is vertically offset from a bottommost surface of the spin conductor charge insulator layer, the second sidewall is opposite the first sidewall. In the SOT MRAM structure, an interface between each of the spin conductor charge insulator layer, the spin conductor layer, the I-shaped SOT channel, the MTJ structure and the MTJ cap is a pure material interface. The SOT MRAM structure further includes a dielectric pillar located adjacent to, and in direct contact with, the I-shaped SOT channel.

[0006] In another aspect of the present application, a memory structure is provided that includes a first SOT MRAM and a second SOT MRAM, each of the first SOT MRAM and the second SOT MRAM includes a spin conductor charge insulator layer having a horizontal portion and a vertical portion, a spin conductor layer contacting the horizontal portion of the spin conductor charge insulator layer and a first sidewall of the vertical portion of the spin conductor charge insulator layer, a MTJ structure including a magnetic free layer, a magnetic tunnel barrier layer, and a magnetic reference layer in which the magnetic free layer is in direct physical contact with the spin conductor layer, a MTJ cap contacting the MTJ structure, a MRAM electrode-containing hard mask contacting the MTJ cap, and an I-shaped SOT channel located on a second sidewall of the vertical portion of the spin conductor charge insulator layer and having a bottommost surface that is vertically offset from a bottommost surface of the spin conductor charge insulator layer, wherein the second sidewall is opposite the first sidewall, and a dielectric pillar located adjacent to, and in direct contact with, the I-shaped SOT channel. In the memory structure, an interface between each of the spin conductor charge insulator layer, the spin conductor layer, the I-shaped SOT channel, the MTJ structure and the MTJ cap is a pure material interface. The memory structure further includes a metal shunting structure contacting a topmost surface of the I-shaped SOT channel of both the first SOT MRAM and the second SOT MRAM, and located on top of the dielectric pillar.

[0007] In another aspect of the present application a memory structure is provided that includes a first SOT MRAM and a second SOT MRAM, each of the first SOT MRAM and the second SOT MRAM includes a spin conductor charge insulator layer having a horizontal portion and a vertical portion, a spin conductor layer contacting the horizontal portion of the spin conductor charge insulator layer and a first sidewall of the vertical portion of the spin conductor charge insulator layer, a MTJ structure including a magnetic free layer, a magnetic tunnel barrier layer, and a magnetic reference layer in which the magnetic free layer is in direct physical contact with the spin conductor layer, a MTJ cap contacting the MTJ structure, a MRAM electrode-containing hard mask contacting the MTJ cap, and an I-shaped SOT channel located on a second sidewall of the vertical portion of the spin conductor charge insulator layer and having a bottommost surface that is vertically offset from a bottommost surface of the spin conductor charge insulator layer, wherein the second sidewall is opposite the first sidewall, and a dielectric pillar located adjacent to, and in direct contact with, the I-shaped SOT channel. In the memory structure, an interface between each of the spin conductor charge insulator layer, the spin conductor layer, the I-shaped SOT channel, the MTJ structure and the MTJ

cap is a pure material interface. The memory structure can further include a first metal shunting structure contacting a topmost surface of the I-shaped SOT channel of the first SOT MRAM, a second metal shunting structure contacting a topmost surface of the I-shaped SOT channel of the second SOT MRAM, and a cell separating dielectric separating the first metal shunting structure from the second metal shunting structure and located above the dielectric pillar.

BRIEF DESCRIPTION OF THE DRAWINGS

[0008] FIG. **1** is a top down view illustrating a device layout that can be used in the present application.

[0009] FIGS. **2**A-**2**B are cross sectional views of an exemplary back-end-of-the-line (BEOL) structure through cut A-A and B-B of FIG. **1**, respectively, that can be employed in accordance with an embodiment of the present application, the exemplary BEOL structure includes a first interconnect dielectric layer, an electrically conductive via structure embedded in the first interlayer dielectric layer and a column of dielectric pillars (i.e., step dielectric structures).

[0010] FIGS. **3**A and **3**B are cross sectional view of the exemplary BEOL structure shown in FIGS. **2**A and **2**B, respectively, after forming a blanket layer of dielectric material on physically exposed surfaces of the first interconnect dielectric layer, the electrically conductive via structure and each dielectric pillar.

[0011] FIGS. **4**A and **4**B are cross sectional view of the exemplary BEOL structure shown in FIGS. **3**A and **3**B, respectively, after removing the blanket layer of dielectric material from the sidewall of the interconnect dielectric pillar, while maintaining a first portion of the blanket layer of dielectric material on the first interconnect dielectric layer and the electrically conductive via structure, and a second portion of the blanket layer of dielectric material on top of the dielectric pillar.

[0012] FIGS. **5**A and **5**B are cross sectional view of the exemplary BEOL structure shown in FIGS. **4**A and **4**B, respectively, after forming a material stack of, from bottom to top, a blanket layer of SOT material, a blanket layer of spin conductor charge insulator material, a blanket layer of spin conductor material, blanket layers of MTJ materials, a blanket layer of MTJ cap material, and a blanket layer of sacrificial hard mask material.

[0013] FIGS. **6**A and **6**B are cross sectional view of the exemplary BEOL structure shown in FIGS. **5**A and **5**B, respectively, after removing the material stack that is located on top of the second portion of the blanket layer of dielectric material that is on top of the dielectric pillar.

[0014] FIGS. **7**A and **7**B are cross sectional view of the exemplary BEOL structure shown in FIGS. **6**A and **6**B, respectively, after forming a blanket layer of MRAM electrode-containing hard mask material.

[0015] FIGS. **8**A and **8**B are cross sectional view of the exemplary BEOL structure shown in FIGS. **7**A and **7**B, respectively, after patterning the blanket layer of MRAM electrode-containing hard mask material and an upper portion of the remaining material stack.

[0016] FIGS. **9**A and **9**B are cross sectional view of the exemplary BEOL structure shown in FIGS. **8**A and **8**B, respectively, after forming a dielectric spacer along a sidewall of a remaining portion of the blanket layer of MRAM electrode-containing hard mask material and a remaining portion of the upper portion of the material stack.

[0017] FIGS. **10**A and **10**B are cross sectional view of the exemplary BEOL structure shown in FIGS. **9**A and **9**B, respectively, after performing a directional etch to physically expose the first portion of the blanket layer of dielectric material that is located on the first interconnect dielectric layer.

[0018] FIGS. **11**A and **11**B are cross sectional view of the exemplary BEOL structure shown in FIGS. **10**A and **10**B, respectively, after physically exposing a bottommost surface of the blanket layer of SOT material by removing the physically exposed first portion of the blanket layer of dielectric material.

[0019] FIGS. **12**A and **12**B are cross sectional view of the exemplary BEOL structure shown in FIGS. **11**A and **11**B, respectively, after performing a selective and time controlled recess etch of the physically exposed blanket layer of SOT material.

[0020] FIGS. **13**A and **13**B are cross sectional view of the exemplary BEOL structure shown in FIGS. **12**A and **12**B, respectively, after forming a second interconnect dielectric layer.

[0021] FIGS. **14**A and **14**B are cross sectional view of the exemplary BEOL structure shown in FIGS. **13**A and **13**B, respectively, after forming patterned masks on the remaining portion of the blanket layer of MRAM electrode-containing hard mask material, wherein at least one of the patterned masks is formed over one of the dielectric pillars.

[0022] FIGS. **15**A and **15**B are cross sectional view of the exemplary BEOL structure shown in FIGS. **14**A and **14**B, respectively, after performing an MTJ patterning process, the MTJ patterning process forms SOT MRAMs.

[0023] FIGS. **16**A and **16**B are cross sectional view of the exemplary BEOL structure shown in FIGS. **15**A and **15**B, respectively, after forming an encapsulation liner, and a third interconnect dielectric layer.

[0024] FIGS. **17**A and **17**B are cross sectional view of the exemplary BEOL structure shown in FIGS. **16**A and **16**B, respectively, after forming a first contact structure that contacts a surface of the electrically conductive via structure embedded in the first interlayer dielectric layer.

[0025] FIGS. **18**A and **18**B are cross sectional view of the exemplary BEOL structure shown in FIGS. **17**A and **17**B, respectively, after forming additional interconnect dielectric material on the third interconnect dielectric layer and forming second contact structures, each second contact structure contacts a MRAM electrode-containing hard mask of the SOT MRAMs.

[0026] FIG. **19** is a cross sectional view of the exemplary BEOL structure shown in FIG. **13** after forming patterned masks on the remaining portion of the blanket layer of MRAM electrode-containing hard mask material in accordance with another embodiment of the present application.

[0027] FIG. **20** is a cross sectional view of the exemplary BEOL structure shown in FIG. **19** after performing an MTJ patterning process, the MTJ patterning process forms SOT MRAMs.

[0028] FIG. **21** is a cross sectional view of the exemplary BEOL structure of FIG. **20** after forming an encapsulation liner.

[0029] FIG. **22** is a cross sectional view of the exemplary BEOL structure of FIG. **21** after performing a shunting region patterning process.

[0030] FIG. **23** is a cross sectional view of the exemplary BEOL structure of FIG. **22** after forming a shunting metal structure.

[0031] FIG. **24** is a cross sectional view of the exemplary BEOL structure of FIG. **23** after forming an upper interconnect dielectric layer and second contact structures in the upper interconnect dielectric layer, each second contact structure contacts a MRAM electrode of the SOT MRAMs.

[0032] FIGS. **25**A and **25**B are cross sectional views of another exemplary BEOL structure through cut A-A and B-B of FIG. **1** respectively, that can be employed in accordance with an embodiment of the present application, the exemplary BEOL structure includes a first interconnect dielectric layer, an electrically conductive via structure embedded in the first interlayer dielectric layer and a plurality of dielectric pillars.

[0033] FIGS. **26**A and **26**B are cross sectional views of the exemplary BEOL structure shown in FIGS. **25**A and **25**B, respectively, after performing the processing steps illustrated in FIGS. **3**A-**8**B thereon.

[0034] FIG. **26**C is a cross sectional view of the exemplary BEOL structure shown in FIGS. **26**A and **26**B, respectively, and through cut C-C of FIG. **1**.

[0035] FIGS. **27**A-**27**C are cross sectional views of the exemplary BEOL structure shown in FIGS. **26**A-**26**C, respectively, after performing the processing steps of FIGS. **9**A-**10**B thereon.

[0036] FIGS. **28**A-**28**C are cross sectional views of the exemplary BEOL structure shown in FIGS. **27**A-**27**C, respectively, after performing the processing step of FIGS. **11**A-**11**B thereon.

[0037] FIGS. **29**A-**29**C are cross sectional views of the exemplary BEOL structure shown in FIGS. **28**A-**28**C, respectively, after performing the processing step of FIGS. **12**A-**12**B thereon.

[0038] FIGS. **30**A-**30**C are cross sectional views of the exemplary BEOL structure shown in FIGS. **29**A-**29**C, respectively, after performing the processing step of FIGS. **13**A-**13**B thereon.

[0039] FIGS. **31**A and **31**B are cross sectional views of the exemplary BEOL structure shown in FIGS. **30**A and **30**B, respectively, after forming patterned masks on the remaining portion of the blanket layer of MRAM electrode-containing hard mask material.

[0040] FIGS. **32**A and **32**B are cross sectional views of the exemplary BEOL structure shown in FIGS. **31**A and **31**B, respectively, after performing an MTJ patterning process, and forming an encapsulation liner, a shunting metal, and a third interconnect dielectric layer.

[0041] FIGS. **33**A and **33**B are cross sectional views of the exemplary BEOL structure shown in FIGS. **32**A and **32**B, respectively, after forming a first contact structure that contacts a surface of the electrically conductive via structure embedded in the first interlayer dielectric layer.

[0042] FIGS. **34**A and **34**B are cross sectional view of the exemplary BEOL structure shown in FIGS. **33**A and **33**B, respectively, after forming additional interconnect dielectric material on the third interconnect dielectric layer and forming second contact structures.

[0043] FIG. **34**C is a cross sectional view of the exemplary BEOL structure shown in FIGS. **34**A and **34**B and through cut C-C of FIG. **1**.

[0044] FIG. **35** is a cross sectional view of alternative SOT memory structure of the present application through cut A-A of FIG. **1**.

[0045] FIG. **36** is a cross sectional view of alternative SOT memory structure of the present application through cut A-A of FIG. **1**.

DETAILED DESCRIPTION

[0046] The present application will now be described in greater detail by referring to the following discussion and drawings that accompany the present application. It is noted that the drawings of the present application are provided for illustrative purposes only and, as such, the drawings are not drawn to scale. It is also noted that like and corresponding elements are referred to by like reference numerals.

[0047] In the following description, numerous specific details are set forth, such as particular structures, components, materials, dimensions, processing steps and techniques, in order to provide an understanding of the various embodiments of the present application. However, it will be appreciated by one of ordinary skill in the art that the various embodiments of the present application may be practiced without these specific details. In other instances, well-known structures or processing steps have not been described in detail in order to avoid obscuring the present application.

[0048] It will be understood that when an element as a layer, region or substrate is referred to as being "on" or "over" another element, it can be directly on the other element or intervening elements may also be present. In contrast, when an element is referred to as being "directly on" or "directly over" another element, there are no intervening elements present. It will also be understood that when an element is referred to as being "beneath" or "under" another element, it can be directly beneath or under the other element, or intervening elements may be present. In contrast, when an element is referred to as being "directly beneath" or "directly under" another element, there are no intervening elements present.

[0049] The terms substantially, substantially similar, about, or any other term denoting functionally equivalent similarities refer to instances in which the difference in length, height, or orientation convey no practical difference between the definite recitation (e.g., the phrase sans the substantially similar term), and the substantially similar variations. In one embodiment, substantial (and its derivatives) denote a difference by a generally accepted engineering or manufacturing tolerance for similar devices, up to, for example, 10% deviation in value or 10° deviation in angle.

[0050] A SOT MRAM structure with perpendicular magnetic free layer magnetization and memory structures including the same are provided. The SOT MRAM structure includes a spin conductor charge insulator layer having a horizontal portion and a vertical portion, and a spin conductor layer contacting the horizontal portion of the spin conductor charge insulator layer and a first sidewall of the vertical portion of the spin conductor charge insulator layer. The SOT MRAM structure further includes a MTJ structure including a magnetic free layer, a magnetic tunnel barrier layer, and a magnetic reference layer in which the magnetic free layer is in direct physical contact with the spin conductor layer. The SOT MRAM structure further includes a MTJ cap contacting the MTJ structure, a MRAM electrode-containing hard mask contacting the MTJ cap, and an I-shaped SOT channel located on a second sidewall of the

vertical portion of the spin conductor charge insulator layer and having a bottommost surface that is vertically offset from a bottommost surface of the spin conductor charge insulator layer. In the memory structure, an interface between each of the spin conductor charge insulator layer, the spin conductor layer, the I-shaped SOT channel, the MTJ structure and the MTJ cap is a pure material interface. The SOT MRAM structure further includes a dielectric pillar located adjacent to, and in direct contact with, the I-shaped SOT channel. These and other aspects of the present application will be described in greater detail herein below.

[0051] Referring first to FIG. **1**, there is illustrated a device layout that can be used in the present application. Notably, the device layout illustrated in FIG. **1** can be used for a SOT MRAM structure in accordance with the present application. The device layout illustrated in FIG. **1** includes cut A-A, cut B-B and cut C-C. Cut A-A is through an area in which an adjacent pair of SOT MRAM structures of the present application will be formed; cut A-A pass through an area in which shunting of the two adjacent SOT MRAMs can be performed. Cut B-B is through an area in which a first contact structure can be formed that contacts a sidewall SOT structure of each adjacent pairs of SOT MRAMS and an electrically conductive via structure that is embedded in a first interconnect dielectric layer. Cut C-C is through an area that includes a single SOT MRAM.

[0052] Referring now to FIGS. **2**A-**2**B, there are illustrated an exemplary BEOL structure through cut A-A and B-B of FIG. **1**, respectively, that can be employed in accordance with an embodiment of the present application. The exemplary BEOL structure illustrated in FIG. **1** includes a first interconnect dielectric layer **10**, an electrically conductive via structure **12** embedded in the first interlayer dielectric layer **10** and a dielectric pillar **14** (i.e., a step dielectric structure). Although a single electrically conductive via structure **12** is described and illustrated, a plurality of electrically conductive via structures **12** can be formed in the first interconnect dielectric layer **10**. In the present application, a plurality of dielectric pillars **14** can be formed. In this embodiment, the dielectric pillars **14** would be in a column that includes the contact structure to embedded via area and the shunting area.

[0053] Although not shown, the exemplary BEOL structure of FIG. **1** can be formed on a surface of a substrate that includes a front-end-of-the-line (FEOL) level and a middle-of-the-line (MOL) level. The FEOL level includes one of more FEOL semiconductor devices such as, for example, transistors, capacitors and/or diodes formed therein. The FEOL semiconductor devices can provide logic and memory read/write functionalities. The MOL level is formed on the FEOL level and the MOL level typically includes one or more MOL contact structures embedded in a MOL dielectric material. The FEOL level and the MOL level can include materials that are well known to those skilled in the art, and each of the FEOL level and the MOL level can be formed utilizing processing techniques that are also well known to those skilled in the art. In some embodiments, the substrate in which the exemplary BEOL structure of FIGS. **2**A-**2**B can be formed includes one or more lower interconnect levels that are located on the MOL level. In such an embodiment, the exemplary BEOL structure of FIGS. **2**A-**2**B represents an upper BEOL level of a multileveled BEOL structure.

[0054] The first interconnect dielectric layer **10**, is composed of any interconnect dielectric material including, for example, silicon oxide (SiOx), silsesquioxanes, C doped oxides (i.e., organosilicates) that includes atoms of Si, C, O and H, thermosetting polyarylene ethers, or multilayers thereof. The term "polyarylene" is used in this application to denote aryl moieties or inertly substituted aryl moieties which are linked together by bonds, fused rings, or inert linking groups such as, for example, oxygen, sulfur, sulfone, sulfoxide, carbonyl and the like. The first interconnect dielectric layer **10** can have a dielectric constant (all dielectric constants mentioned herein are measured relative to a vacuum, unless otherwise stated) that is about 4.0 or less. In one embodiment, the first interconnect dielectric layer **10** has a dielectric constant of 2.8 or less. These dielectrics generally having a lower parasitic cross talk as compared to dielectric materials whose dielectric constant is greater than 4.0.

[0055] The electrically conductive via structure **12** that can be employed in the present application is composed of an electrically conductive metal or electrically conductive metal alloy. Illustrative examples of electrically conductive materials that can be used in the present application to provide the electrically conductive via structure **12** include, but are not limited to, Cu, Al, Cu-Al alloy, W, Ru, or Rh. In some embodiments (not shown), a diffusion barrier liner can be present along at least a sidewall (and in some embodiments along a bottom wall) of the electrically conductive via structure **12**. When present, the diffusion barrier liner can be composed of any well-known diffusion barrier material such as, for example, Ta, TaN, Ti, TiN, W or WN. In some embodiments, the diffusion barrier liner can include a material stack of two or more diffusion barrier materials. In one example, the diffusion barrier liner can be composed of a stack of Ta/TaN or a stack of Ti/TiN.

[0056] The interconnect level including the first interconnect dielectric layer **10** and the electrically conductive via structure **12** can be formed utilizing BEOL processing techniques well known to those skilled in the art including, for example, deposition of the first interconnect dielectric layer **10**, followed by a damascene process that provides the electrically conductive via structure **12**. The first interconnect dielectric layer **10** can be deposited by, for example, chemical vapor deposition (CVD), plasma enhanced chemical vapor deposition (PECVD) or spin-on coating. The damascene process includes lithographically forming a via opening into the first interconnect dielectric layer **10**, depositing the electrically conductive metal or electrically conductive metal alloy in the via opening, and thereafter performing a planarization process such as, for example, chemical mechanical polishing (CMP). The electrically conductive metal or electrically conductive metal alloy that provides the electrically conductive via structure **12** can be formed by a deposition process such as, for example, CEVD, PECVD, sputtering, or plating.

[0057] The dielectric pillar **14** is composed of a first dielectric material that is typically compositionally different from the first interconnect dielectric layer **10**. Illustrative examples of first dielectric materials that can be used in providing the dielectric pillar **14** include, but are not limited to, silicon dioxide, silicon nitride, hafnium dioxide, aluminum oxide or any combination thereof. The dielectric pillar **14** can be formed by depositing a blanket layer of the first dielectric material on the interconnect level including the first interconnect dielectric layer **10** and the electrically conductive via structure **12**. The depositing of the blanket

layer of the first dielectric material can include, CVD, PECVD, physical vapor deposition (PVD), or atomic layer deposition (ALD). Following the deposition of the blanket layer of the first dielectric material, the blanket layer of the first dielectric material is patterned by lithography and etching to provide the dielectric pillar as shown in FIGS. **2**A and **2**B. Throughout the present application and unless stated otherwise, the term "lithography" denotes a process in which a photoresist material is formed via deposition (e.g., CVD, PECVD or spin-on coating) on a layer or combination of layers that need to be patterned. The as-deposited photoresist material is then exposed to a pattern of irradiation and thereafter the exposed photoresist material is developed using a conventional developer. The etching used in providing the dielectric pillar **14** includes a dry etching process (such as, for example, reactive ion beam etching (RIE), plasma etching or ion beam etching (IBE)), a chemical wet etching process, or a combination of dry etching and chemical wet etching.

[0058] Referring now to FIGS. **3**A and **3**B, there are illustrated the exemplary BEOL structure shown in FIGS. **2**A and **2**B, respectively, after forming a blanket layer of dielectric material **16**L on physically exposed surfaces of the first interconnect dielectric layer **10**, the electrically conductive via structure **12** and the dielectric pillar **14**. The blanket layer of dielectric material **16**L is composed of a second dielectric material that is compositionally different from the first dielectric material that provides the dielectric pillar **14**. Illustrative examples of second dielectric materials that can be used in providing the blanket layer of dielectric material **16**L include, but are not limited to, silicon dioxide, silicon nitride, hafnium dioxide, aluminum oxide or any combination thereof. The blanket layer of dielectric material **16**L can be formed by a deposition process such as, for example, directional PVD. As is shown, the blanket layer of dielectric material **16**L is formed along the sidewalls and on top of the dielectric pillar **14**.

[0059] Referring now to FIGS. **4**A and **4**B, there are illustrated the exemplary BEOL structure shown in FIGS. **3**A and **3**B, respectively, after removing the blanket layer of dielectric material **16**L from the sidewall of the dielectric pillar **14**, while maintaining a first portion of the blanket layer of dielectric material **16**L on the first interconnect dielectric layer **10** and the electrically conductive via structure **12** and a second portion of the blanket layer of dielectric material on top of the dielectric pillar **14**. The remaining first portion of the blanket layer of dielectric material **16**L is referred to herein as a sacrificial dielectric layer **16** and the remaining second portion of the blanket layer of dielectric material **16**L is referred to herein as a dielectric cap **16**C. The removal of the blanket layer of dielectric material **16**L from the sidewall of the dielectric pillar **14** can include an etching process such as, for example, a chemical wet etch or isotropic RIE. After removing the blanket layer of dielectric material **16**L from the sidewall of the dielectric pillar **14**, an upper portion of the sidewall of the dielectric pillar **14** is physically exposed; a lower portion of the sidewall of dielectric pillar **14** is in direct physical contact with the sacrificial dielectric layer **16** (i.e., the remaining first portion of the blanket layer of dielectric material **16**L).

[0060] Referring now to FIGS. **5**A and **5**B, there are illustrated the exemplary BEOL structure shown in FIGS. **4**A and **4**B, respectively, after forming a material stack of, from bottom to top, a blanket layer of SOT material **18**L, a blanket layer of spin conductor charge insulator material **20**L, a blanket layer of spin conductor material **22**L, blanket layers of MTJ materials **24**L (these blanket layers of MTJ materials are shown as a single layer in the drawings of the present application), a blanket layer of MTJ cap material **26**L and a blanket layer of sacrificial hard mask material **28**L.

[0061] The material stack, except for possibly the blanket layer of sacrificial hard mask material **28**L, can be formed utilizing one or more in-situ deposition processes including, but not limited to, CVD, PECVD, PVD, ALD (including plasma enhanced ALD) or sputtering. The in-situ deposition processes are performed without exposing any of the depositions to an external ambient such as, for example, air. Thus, each material interface that is present between the deposited blanket layers in the material stack is a pure material interface. The term "pure material interface" denotes an interface between two contacting layers that is composed of only elements of those two contacting layers without containing any external element such as oxygen, carbon or nitride. In the present application, the pure material interfaces contain an external element content of less than 10 ppm, more typically the external element content is less than 1 ppm. Having such pure material interfaces in the material stack can prevent any deleterious effects on the magnetic properties of each of the blanket layers that are present in the material stack. For example, a pure material interface in the in-situ deposited material stack can avoid spin scattering issues which can exist when the material stack is not formed by one or more in-situ deposition processes.

[0062] The blanket layer of SOT material **18**L is composed of a SOT channel material. The SOT channel material employed in the present application provides the necessary charge-to-spin conversion while carrying the same charge current through the resultant MTJ structure. Exemplary SOT channel materials that can be employed include, but are not limited to, β-Ta, β-W, Cu_xPt_{1-x}, $Cu_{1-x}Ta_x$, Pd_xPt_{1-x}, Au_xPt_{1-x}, Pt, Bi_2Se_3, WTe_2, $PtTe_2$, TaS_2, Pt_xRh_{1-x} or any materials known to produce large SOT charge-to-spin conversion efficiency, where x is from 0 to 1. Other types of SOT-like channel materials that can be employed are the so-called orbital-moment generating alloys, such as CuOx/Pt or CuN/Pt. The blanket layer of SOT material **18**L can have a thickness from 1 nm to 20 nm; although other thicknesses are possible and can be used as the thickness of the blanket layer of SOT material **18**L.

[0063] The blanket layer of spin conductor charge insulator material **20**L is composed of a magnetic insulator. Magnetic insulators that can be employed as the blanket layer of spin conductor charge insulator material **20**L are high spin-conducting materials that are also an insulator for charge conductance. Exemplary magnetic insulators that can be employed as the blanket layer of spin conductor charge insulator material **20**L include, but are not limited to, FeO_x, NiO, or YIG ($Y_3Fe_5O_{12}$). The blanket layer of spin conductor charge insulator material **20**L can have a thickness from 0.5 nm to 5 nm; although other thicknesses are possible and can be used as the thickness of the blanket layer of spin conductor charge insulator material **20**L.

[0064] The blanket layer of spin conductor material **22**L is composed of a metal or metal alloy that has a high spin-conductance and a long spin-diffusion length. The spin-collector materials exhibit a low spin loss. Exemplary spin-collector materials that can be used in the present application

as the blanket layer of spin conductor material **22**L include, but are not limited to, Cu, Ag, Au or alloys thereof. The blanket layer of spin conductor material **22**L can have a thickness from 3 nm to 100 nm; although other thicknesses are possible and can be used as the thickness of the blanket layer of spin conductor material **22**L.

[0065] The blanket layers of MTJ materials **24**L includes a magnetic free layer, a tunnel barrier layer and a magnetic reference layer. In the present application, the magnetic free layer of the blanket layer of MTJ materials forms a direct interface with the blanket layer of spin conductor material **22**L. The magnetic free layer of the blanket layers of MTJ materials **24**L is composed of at least one magnetic material with a magnetization that can be changed in orientation relative to the magnetization orientation of the magnetic reference material; note that the term "magnetic free material" denotes that this magnetic layer does not have a fixed magnetization; the term does not however mean that this layer does not contain a magnetic material. Exemplary materials for magnetic free layer include, but are not limited to, alloys and/or multilayers of cobalt, iron, alloys of cobalt-iron, nickel, alloys of nickel-iron, and alloys of cobalt-iron-boron. The magnetic free layer can have a thickness from 0.3 nm to 3 nm; although other thicknesses are possible and can be used as the thickness of the magnetic free layer.

[0066] In some embodiments, the magnetic free layer is replaced by a multilayer layer structure that includes a non-magnetic layer that is sandwiched between a bottom magnetic free layer and a top magnetic free layer. The top and bottom magnetic free layers are components of magnetic materials as mentioned above for the magnetic free layer. The non-magnetic layer is composed of a non-magnetic material that contains at least one element with an atomic number less than 74 such as, for example, Be, Mg, Al, Ca, B, C, Si, V, Cr, Ti, Mn or any combination including alloys thereof. The thickness of the non-magnetic layer is thin enough to allow the bottom and top magnetic free layers to couple together magnetically so that in equilibrium bottom and top magnetic are always parallel. In one example, the non-magnetic layer has a thickness from 0.3 nm to 3.0 nm.

[0067] The tunnel barrier layer of the blanket layers of MTJ materials **24**L is composed of an insulator material and is formed at such a thickness as to provide an appropriate tunneling resistance. Exemplary insulator materials for the tunnel barrier layer the blanket layers of the MTJ materials **24**L include, but are not limited to, magnesium oxide, aluminum oxide, and titanium oxide, or materials of higher electrical tunnel conductance, such as semiconductors or low-bandgap insulators. The thickness of the tunnel barrier layer will depend on the material selected. In one example, the tunnel barrier layer can have a thickness from 0.5 nm to 1.5 nm; although other thicknesses are possible as long as the thickness of the tunnel barrier layer provides an appropriate tunneling resistance.

[0068] The magnetic reference layer of the blanket layers of MTJ materials **24**L has a fixed magnetization. The magnetic reference layer of the blanket layers of MTJ materials **24**L is composed of a metal or metal alloy that includes one or more metals exhibiting high spin polarization. In alternative embodiments, exemplary metals for the formation of the magnetic reference layer include iron, nickel, cobalt, chromium, boron, and manganese. Exemplary metal alloys can include the metals exemplified by the above. In another embodiment, the magnetic reference layer **30** can be a multilayer arrangement having (1) a high spin polarization region formed from of a metal and/or metal alloy using the metals mentioned above, and (2) a region constructed of a material or materials that exhibit strong perpendicular magnetic anisotropy (strong PMA). Exemplary materials with strong PMA that can be used include a metal such as cobalt, nickel, platinum, palladium, iridium, or ruthenium, and can be arranged as alternating layers. The strong PMA region can also include alloys that exhibit strong PMA, with exemplary alloys including cobalt-iron-terbium, cobalt-iron-gadolinium, cobalt-chromium-platinum, cobalt-platinum, cobalt-palladium, iron-platinum, and/or iron-palladium. The alloys can be arranged as alternating layers. In some embodiments, these alternating layers in the magnetic reference layer can be separated by exchange-coupling layers (such as Ru) so as to have oppositely aligned magnetization directions, forming the so-called synthetic antiferromagnets in order to reduce dipolar coupling between the magnetic reference layer and the magnetic free layer. In one embodiment, combinations of these materials and regions can also be employed. The magnetic reference layer can have a thickness from 1 nm to 15 nm; although other thicknesses are possible and can be used as the thickness of the magnetic reference layer.

[0069] The blanket layer of MTJ cap material **26**L is composed of any MTJ cap material including, but not limited to, Nb, NbN, W, WN, Ta, TaN, Ti, TiN, Ru, Mo, Cr, V, Pd, Pt, Rh, Sc, Al or other high melting point metals or conductive metal nitrides. The blanket layer of MTJ cap material **26**L can have a thickness from 5 nm to 40 nm; other thicknesses are possible and can be used in the present application as the thickness of the blanket layer of MTJ cap material **26**L.

[0070] The blanket layer of sacrificial hard mask material **28**L can be composed of any hard mask material including, for example, TaN, TiN, Ta, Ti, silicon dioxide, silicon nitride or any combination thereof. The blanket layer of sacrificial hard mask material **28**L can have a thickness from 5 nm to 50 nm; other thicknesses are possible and can be used in the present application as the thickness of the blanket layer of sacrificial hard mask material **28**L. In some embodiments, the blanket layer of sacrificial hard mask material **28**L can be formed utilizing an in-situ deposition as defined above. In other embodiments, the blanket layer of sacrificial hard mask material **28**L can be formed utilizing a deposition process that is ex-situ compared to the other blanket layers within the material stack.

[0071] Referring now to FIGS. **6**A and **6**B, there are illustrated the exemplary BEOL structure shown in FIGS. **5**A and **5**B, respectively, after removing the material stack that is located on top of the second portion of the blanket layer of dielectric material (i.e., dielectric cap **16**C) that is on top of the dielectric pillar **14**. In some embodiments, the removal of the material stack that is located on top of the dielectric cap **16**C can be performed utilizing an angled ion beam etching process. In other embodiments, the removal of the material stack that is located on top of the dielectric cap **16**C can be performed by CMP. In either embodiment, the removal of the material stack stops on a surface of the dielectric cap **16**C and as such the blanket layer of sacrificial hard mask material **28**L is entirely removed during this step of the present application. As is shown in FIGS. **6**B-**6**B, the

material stack without the blanket layer of sacrificial hard mask material **28**L remains to the left and right of the dielectric pillar **14**.

[0072] Referring now to FIGS. **7**A and **7**B, there are illustrated the exemplary BEOL structure shown in FIGS. **6**A and **6**B, respectively, after forming a blanket layer of MRAM electrode-containing hard mask material **30**L. The blanket layer of MRAM electrode-containing hard mask material **30**L is composed of an electrically conductive material such as, for example, Ta, TaN, Ti, TiN, Ru, RuN, RuTa, RuTaN, Co, CoWP, CoN, W, WN or any combination thereof. The blanket layer of MRAM electrode-containing hard mask material **30**L will subsequently form an electrode of the SOT MRAM. The blanket layer of MRAM electrode-containing hard mask material **30**L can have a thickness from 10 nm to 200 nm; other thicknesses are possible and can be used in the present application as the thickness of the blanket layer of MRAM electrode-containing hard mask material **30**L. The blanket layer of MRAM electrode-containing hard mask material **30**L can be formed by a deposition process such as, for example, CVD, PECVD, PVD, ALD (including plasma enhanced ALD) or sputtering. In some embodiments, a planarization process such as, for example, CMP can follow the deposition process. As is illustrated, the blanket layer of MRAM electrode-containing hard mask material **30**L is formed directly on a physically exposed surface of the blanket layer of MTJ cap **26**L of the remaining material stack and on a physically exposed surface of the dielectric cap **16**C.

[0073] Referring now to FIGS. **8**A and **8**B, there are illustrated the exemplary BEOL structure shown in FIGS. **7**A and **7**B, respectively, after patterning the blanket layer of MRAM electrode-containing hard mask material **30**L and an upper portion of the remaining material stack. The patterning includes a first patterning step in which lithography and etching are employed to patterning the blanket layer of MRAM electrode-containing hard mask material **30**L into a MRAM electrode-containing hard mask **30**. The MRAM electrode-containing hard mask **30** is then used as a patterned mask, and an end-point detection RIE or IBE etch is then used in a second patterning step to pattern the upper portion of the remaining material stack. The etch used to pattern the upper portion of the remaining material stack stops on a sub-surface of either the blanket layer of spin conductor charge insulator material **20**L or the blanket layer of SOT material **18**L. In the illustrated embodiment, the etch used to pattern the upper portion of the remaining material stack stops of a sub-surface of the blanket layer of spin conductor charge insulator material **20**L. The term "sub-surface" denotes a surface of a material layer or a structure that is located between a topmost surface and a bottommost surface of the material layer of the structure.

[0074] After the second patterning step, a portion of each of the blanket layer of MTJ cap material **26**L, the blanket layers of MTJ materials **24**L and the blanket layer of spin conductor material **22**L remain beneath the MRAM electrode-containing hard mask **30**. The remaining portion of the blanket layer of MTJ cap material **26**L is referred to herein as a MTJ cap **26**, the remaining portion of the blanket layers of MTJ materials **24**L is referred to herein as a MTJ structure **24**, and the remaining portion of the blanket layer of spin conductor material **22**L is referred to herein as spin conductor layer **22**.

[0075] Referring now to FIGS. **9**A and **9**B, there are illustrated the exemplary BEOL structure shown in FIGS. **8**A and **8**B, respectively, after forming a dielectric spacer **32** along a sidewall of the MRAM electrode-containing hard mask **30**, the MTJ cap **26**, the MTJ structure **24** and the spin conductor layer **22**. The dielectric spacer **32** is formed on top of a physically exposed sub-surface of either the blanket layer of spin conductor charge insulator material **20**L or the blanket layer of SOT material **18**L. In the illustrated embodiment, the dielectric spacer is formed on a sub-surface of the blanket layer of spin conductor charge insulator material **20**L. Dielectric spacer **32** is composed of any dielectric spacer material including, for example, silicon dioxide, silicon nitride or aluminum oxide. The dielectric spacer **32** can be formed by deposition (e.g., PECVD or ALD), followed by a directional etch such as RIE or IBE. The dielectric spacer **32** can have a width that tapers outward from a topmost surface to a bottommost surface.

[0076] Referring now to FIGS. **10**A and **10**B, there are illustrated the exemplary BEOL structure shown in FIGS. **9**A and **9**B, respectively, after performing a directional etch such as, for example, RIE or IBE to physically expose the sacrificial dielectric layer **16** that is located on the first interconnect dielectric layer **10**. The directional etch utilizes the dielectric spacer **32** and the MRAM electrode-containing hard mask **30** as a combined etch mask. In illustrated embodiment, a portion of the blanket layer of spin conductor charge insulator material **20**L and a portion of the blanket layer of SOT material **18**L remain beneath the combined etch mask after the directional etch. The remaining portion of the blanket layer of spin conductor charge insulator material **20**L is referred to here as spin conductor charge insulator layer **20** and the remaining portion of the blanket layer of SOT material **18**L is referred to herein as a SOT layer **18**. In the illustrated embodiment, both the spin conductor charge insulator layer **20** and the SOT layer **18** have a width that is greater than the width of the MRAM electrode-containing hard mask **30**, the MTJ cap **26**, the MTJ structure **24** and the spin conductor layer **22**.

[0077] Referring now to FIGS. **11**A and **11**B, there are illustrated the exemplary BEOL structure shown in FIGS. **10**A and **10**B, respectively, after physically exposing a bottommost surface of the SOT layer **18** by removing the physically exposed sacrificial dielectric layer **16**. This step of the present application includes a recess etching process that is selective in removing the sacrificial dielectric layer **16**. In one example, and when the sacrificial dielectric layer **16** is composed of silicon dioxide, dilute hydrofluoric acid can be used.

[0078] Referring now to FIGS. **12**A and **12**B, there are illustrated the exemplary BEOL structure shown in FIGS. **11**A and **11**B, respectively, after performing a selective and time controlled recess etch of the physically exposed SOT layer **18**. This etch removes a horizontal component of the SOT layer **18** while leaving a vertical component of the SOT layer **18** along a sidewall of the dielectric pillar **14**. This vertical component of the SOT layer **18** is referred to herein as an I-shaped SOT channel **18**C. The term "I-shaped SOT channel" denotes a vertical channel that lacks any horizontal or diagonal portions that extends outward from the vertical channel; the vertical channel is oriented substantially 90° relative to the horizontal surface of the first interconnect dielectric material layer **10**. In some embodiments, this etch includes NF_3/H_2 or an atomic layer etch when W is used as

the SOT material. This etch stops on a bottommost surface of the spin conductor charge insulator layer **20**. The I-shaped SOT channel **18**C of the present application has a bottommost surface that is vertically offset from a bottommost surface the spin conductor charge insulator layer **20**. In some embodiments and as illustrated in the drawings of the present application, the I-shaped SOT channel **18**C has a bottommost surface that is positioned below a bottommost surface of the spin conductor charge insulator layer **20**. In other embodiments, the I-shaped SOT channel **18**C has a bottommost surface that is positioned above a bottommost surface of the spin conductor charge insulator layer **20**.

[0079] Referring now to FIGS. **13**A and **13**B, there are illustrated the exemplary BEOL structure shown in FIGS. **12**A and **12**B, respectively, after forming a second interconnect dielectric layer **34**. The second interconnect dielectric layer **34** includes one of the interconnect dielectric materials mentioned above for the first interconnect dielectric layer **10**. The interconnect dielectric material that provides the second interconnect dielectric layer **34** can be compositionally the same as, as compositionally different from, the interconnect dielectric material that provides the first interconnect dielectric layer **10**. The second interconnect dielectric layer **34** can be formed utilizing one of the deposition processes mentioned above in forming the first interconnect dielectric layer **10**. A planarization process such as, for example, CMP, can follow the deposition of the interconnect dielectric material that provides the second interconnect dielectric layer **34**. In some embodiments, the second interconnect dielectric layer **34** can include a void **36**. The void **36** is formed in area beneath the spin conductor charge insulator layer **20**. As is shown, the second interconnect dielectric layer **34** forms a material interface with the first interconnect dielectric layer **10**, the dielectric spacer **32** and the bottommost surface of the both the I-shaped SOT channel **18**C and the spin conductor charge insulator layer **20**. The second interconnect dielectric layer **34** can also form an interface with a sidewall edge of the spin conductor charge insulator layer **20**.

[0080] Referring now to FIGS. **14**A and **14**B, there are illustrated the exemplary BEOL structure shown in FIGS. **13**A and **13**B, respectively, after forming patterned masks **38** on the MRAM electrode-containing hard mask **30**, wherein at least one of the patterned mask **38** is formed over one of the dielectric pillars **14** (See, FIG. **14**A). The patterned masks **38** are composed of any masking material such as, for example, an organic planarization material. The patterned masks **38** can be formed by lithography and etching.

[0081] Referring now to FIGS. **15**A and **15**B, there are illustrated the exemplary BEOL structure shown in FIGS. **14**A and **14**B, respectively, after performing an MTJ patterning process, the MTJ patterning process forms SOT MRAMs; two of which are illustrated in FIG. **14**A. The MTJ patterning process includes an etching process such as, for example, RIE or IBE. This etch stops on a surface of the spin conductor layer **22** and typically removes the dielectric spacers **32** from the structure. The patterned masks **38** are removed from the exemplary BEOL structure after the MTJ patterning utilizing any removal process that is selective in removing the patterned masks **38**. Each SOT MRAM includes MRAM electrode-containing hard mask **30** (as an electrode), MTJ cap **26**, MTJ structure **24**, spin conductor layer **22**, spin conductor charge insulator layer **20** and I-shaped SOT channel **18**C. As is shown, both the spin conductor layer **22** and the spin conductor charge insulator layer **20** have a horizontal component beneath the MTJ structure **24** and a vertical component that is adjacent to a side wall of one of the dielectric pillars **16**. Note that in the area in which a contact structure will be formed to the electrically conductive via structure **12** (See, FIG. **15**B), this step of the present application removes the MRAM electrode-containing hard mask **30**, the MTJ cap **26**, and the MTJ structure **24** and a portion of the dielectric pillar **14**, and physically exposes the spin conductor layer **22** and the I-shaped SOT channel **18**C.

[0082] Referring now to FIGS. **16**A and **16**B, there is illustrated the exemplary BEOL structure shown in FIGS. **15**A and **15**B, respectively, after forming an encapsulation liner **40**L, and a third interconnect dielectric layer **42**. The encapsulation liner **40**L is formed by deposition (e.g., CVD, PECVD, PVD, ALD or spin-on coating) of an encapsulation material (typically a dielectric material. In one embodiment, the encapsulation material is silicon nitride. In another embodiment, the encapsulation material is a dielectric material that contains atoms of silicon, carbon and hydrogen. In some embodiments, and in addition to atoms of carbon and hydrogen, the encapsulation material can include atoms of at least one of nitrogen and oxygen. In other embodiments, and in addition to atoms of silicon, nitrogen, carbon and hydrogen, the encapsulation material can include atoms of boron. In one example, the encapsulation liner **40**L can be composed of an nBLOK dielectric material that contains atoms of silicon, carbon, hydrogen, nitrogen and oxygen. In alternative example, the encapsulation liner **40**L can be composed of a SiBCN dielectric material that contains atoms of silicon, boron, carbon, hydrogen, and nitrogen. The encapsulation liner **40**L can have a thickness from 10 nm to 200 nm. Other thicknesses are possible and can be employed as the thickness of the encapsulation liner **40**L. The encapsulation liner **40**L is formed on physically exposed surfaces of each SOT MRAM (See, FIG. **16**A), and on the physically exposed surface of the spin conductor layer **22** and the I-shaped SOT channel **18**C in the area in which contacts will be formed to the electrically conductive via structure **12** (See, FIG. **16**B).

[0083] The third interconnect dielectric layer **42** includes one of the interconnect dielectric materials mentioned above for the first interconnect dielectric layer **10**. The interconnect dielectric material that provides the third interconnect dielectric layer **42** can be compositionally the same as, as compositionally different from, the interconnect dielectric material that provides either the first interconnect dielectric layer **10** or the second interconnect dielectric layer **34**. The third interconnect dielectric layer **42** can be formed utilizing one of the deposition processes mentioned above in forming the first interconnect dielectric layer **10**. A planarization process such as, for example, CMP, can follow the deposition of the interconnect dielectric material that provides the third interconnect dielectric layer **42**.

[0084] Referring now to FIGS. **17**A and **17**B, there are illustrated the exemplary BEOL structure shown in FIGS. **16**A and **16**B, respectively, after forming a first contact structure **44** that contacts a surface of the electrically conductive via structure **12** embedded in the first interlayer dielectric layer **10**. The first contact structure **44** is formed by a forming a contact opening that physically exposes a surface of the electrically conductive via structure **12**. The contact opening is formed by lithography and etching. The

etching removes portions of the third interconnect dielectric layer **42**, the encapsulation liner **40**L and the second interconnect dielectric layer **34**, while removing an entirety of the dielectric pillar **14** that remains on the electrically conductive via structure **12**. The contact opening is then filled (via a deposition process) with at least one of the electrically conductive materials mentioned above for the electrically conductive via structure **12**. A diffusion barrier material can be formed along the sidewalls of the contact opening prior to filling the contact opening with an electrically conductive material. A planarization process such as, for example, CMP, follows the filling of the contact opening. The resultant first contact structure **44** passes through the third interconnect dielectric layer **42**, the encapsulation liner **40**L and the second interconnect dielectric layer **34** and the first contact structure **44** is in direct contact with a sidewall of each of the spin conductor charge insulator layer **20** and the I-shaped SOT channel **18**C.

[0085] Referring now to FIGS. **18**A and **18**B, there are illustrated the exemplary BEOL structure shown in FIGS. **17**A and **17**B, respectively, after forming additional interconnect dielectric material on the third interconnect dielectric layer **42** and forming second contact structures **48**, each second contact structure **48** contacts the MRAM electrode-containing hard mask **30** (e.g., an electrode) of the SOT MRAMs. Collectively the third interconnect dielectric layer **42** and the additional interconnect dielectric material provide an upper interconnect dielectric layer **46**. The additional interconnect dielectric material includes one of the interconnect dielectric materials mentioned above for the first interconnect dielectric layer **10**. The additional interconnect dielectric material can be compositionally the same as, as compositionally different from, the interconnect dielectric material that provides third interconnect dielectric layer **42**. The additional interconnect dielectric material can be formed utilizing one of the deposition processes mentioned above in forming the first interconnect dielectric layer **10**. A planarization process such as, for example, CMP, can follow the deposition of the additional interconnect dielectric material that provides the upper interconnect dielectric layer **46**.

[0086] The second contact structures **48** are formed by forming contact openings that extend through the upper interconnect dielectric layer **46** and the encapsulation liner **40**L that is located on top of the MRAM electrode-containing hard mask **30**. The contacting openings can be formed by lithography and etching. The contact openings are then filled (via a deposition process) with at least one of the electrically conductive materials mentioned above for the electrically conductive via structure **12**. A diffusion barrier material can be formed along the sidewalls of the contact openings prior to filling the contact openings with an electrically conductive material. A planarization process such as, for example, CMP, follows the filling of the contact openings providing second contact structures **48** as shown in FIG. **18**A.

[0087] Notably, FIGS. **18**A-**18**B illustrates a SOT MRAM structure in accordance with an embodiment of the present application; FIGS. **24**, **34**A-**34**C and **35** illustrate similar SOT MRAM structures as illustrated in FIGS. **18**A-**18**B. The SOT MRAM structure includes spin conductor charge insulator layer **20** having a horizontal portion and a vertical portion, and spin conductor layer **22** contacting the horizontal portion of the spin conductor charge insulator layer **20** and a first sidewall of the vertical portion of the spin conductor charge insulator layer **20**. The SOT MRAM structure further includes MTJ structure **24** including a magnetic free layer, a magnetic tunnel barrier layer, and a magnetic reference layer in which the magnetic free layer is in direct physical contact with the spin conductor layer **22**. The SOT MRAM structure further includes a MTJ cap **26** contacting the MTJ structure **24**, a MRAM electrode-containing hard mask **30** contacting the MTJ cap **26** and an I-shaped SOT channel **18**C located on a second sidewall of the vertical portion of the spin conductor charge insulator layer **20** and having a bottommost surface that is vertically offset from a bottommost surface of the spin conductor charge insulator layer **20**, the second sidewall is opposite the first sidewall. In the SOT MRAM structure, an interface between each of the spin conductor charge insulator layer, the spin conductor layer, the I-shaped SOT channel, the MTJ structure and the MTJ cap is a pure material interface. The SOT MRAM structure further includes a dielectric pillar **14** located adjacent to, and in direct contact with, the I-shaped SOT channel **18**C. The I-shaped SOT channel **18**C enables perpendicular SOT memory cell structure. On key advantage of the SOT MRAM structure and the method described to form it, is the pure interface between the SOT channel **18**C, spin conductor charge insulator **20**, spin conductor **22** and MTJ structure **26**, where all these layers have been deposited without vacuum break and not exposed to the ambient or any chemistry as a result of RIE or CMP. In other words, no chemistry such as O, C, N, F, Cl, etc., which will scatter the spin polarized electrons and negatively impact the device performance, can be detected between these critical interfaces which do not contain any of the elements listed above.

[0088] In embodiments of the present application (See, for example, FIGS. **18**A-**18**B), the structure further includes first interconnect dielectric layer **10** located beneath the dielectric pillar **14** and second interconnect dielectric layer **34** located on the first dielectric layer **10** and beneath the spin conductor charge insulator layer **20**, wherein an electrically conductive via structure **12** is present in the first interconnect dielectric layer **10**.

[0089] In embodiments of the present application (See, for example, FIGS. **18**A-**18**B), the structure further includes void **36** located in the second interconnect dielectric layer **34** that is beneath the spin conductor charge insulator layer **20**.

[0090] In embodiments of the present application (See, for example, FIGS. **18**A-**18**B), the structure further includes upper interconnect dielectric layer **46** embedding the MTJ structure **24**, the MTJ cap **26** and the MRAM electrode-containing hard mask **30**.

[0091] In embodiments of the present application (See, for example, FIGS. **18**A-**18**B), the structure further includes first contact structure **44** and second contact structure **48** in the upper interconnect dielectric layer **46**, in which the first contact structure **44** contacts the electrically conductive via structure **12** and the second contact structure **48** contacts the MRAM electrode-containing hard mask **30**. The memory cell's write current is applied through the electrically conductive via structure **12** and first contact structure **44** to the I-shaped SOT channel **18**C, to generate perpendicular spin. Second contact structure **48** is used to read the state of the memory cell by passing a read current through the MTJ.

[0092] In some embodiments of the present application (See, for example, FIGS. **18**A-**18**B), the structure further includes another MRAM electrode-containing hard mask **30** located on top of the dielectric pillar **14** and the I-shaped

SOT channel **18**C, in which a dielectric cap **16**C is located between the another MRAM electrode-containing hard mask and the dielectric pillar. This enables a two-MTJ memory cell structure, where a single write current can write the left and right MTJs in opposite directions, which can be useful for certain applications.

[0093] In some embodiments of the present application (See, for example, FIGS. **24** and **34**A), the structure further includes a shunting metal structure **54** located on a topmost surface of the I-shaped SOT channel **18**C.

[0094] In some embodiments of the present application (See, for example, FIG. **34**A and **35**) the spin conductor charge insulator layer **20** and the spin conductor layer **22** are bounded on one side by the dielectric pillar **14** and on the other side by another dielectric pillar **14**. These dielectric pillars **14** help with stability of the structure after undercutting of blanket layer of SOT material.

[0095] Referring now to FIG. **19**, there is illustrated the exemplary BEOL structure shown in FIG. **13** after forming patterned masks **38** on MRAM electrode-containing hard mask **30** in accordance with an alternative embodiment of the present application. Note that the cut B-B is not shown for this alternative embodiment since it would like the same as in the previous embodiment of the present application. In this alternative embodiment, no patterned mask **38** is formed on top of the dielectric pillar **14**. The patterned mask **38** used for this embodiment is the same as described above in the previous embodiment of the present application.

[0096] Referring now to FIG. **20**, there is illustrated the exemplary BEOL structure shown in FIG. **19** after performing an MTJ patterning process, the MTJ patterning process forms SOT MRAMs. The MTJ patterning process of this embodiment is the same as that previously described above except that in the alternative process the MTJ patterning process removes the dielectric cap **16**C and an upper portion of the dielectric pillar **16** and eliminates the formation of a vertical component for the spin conductor layer **22**. In this alternative embodiment, each SOT MRAM includes MRAM electrode-containing hard mask **30** (as a top electrode), MTJ cap **26**, MTJ structure **24**, spin conductor layer **22**, spin conductor charge insulator layer **20** and I-shaped SOT channel **18**C. As is shown, the spin conductor charge insulator layer **20** has a horizontal component beneath the MTJ structure **24** and a vertical component that is adjacent to a side wall of the remaining dielectric pillar **14**.

[0097] Referring now to FIG. **21**, there is illustrated the exemplary BEOL structure of FIG. **20** after forming an encapsulation liner **40**L. Encapsulation liner **40**L used in the alternative embodiment is the same as the one described above for the previous embodiment of the present application.

[0098] Referring now to FIG. **22**, there is illustrated the exemplary BEOL structure of FIG. **21** after performing a shunting region patterning process. The shunting region patterning process includes forming a patterned mask **50** protecting the SOT MRAMs. Patterned mask **50** includes any masking material including an organic planarization material. The patterned mask **50** has an opening that physically exposes an area in which shunting of neighboring SOT MRAMs is to be performed. The patterned mask **50** can be formed by deposition, lithography and etching. The shunting region patterning process further includes providing an opening **52** that extends through the encapsulation liner **40**L and physically exposes the I-shaped SOT channel **18**C and the remaining pillar **14**. Opening **52** can be formed utilizing an etch that is selective for opening the encapsulation liner **40**L.

[0099] Referring now to FIG. **23**, there is illustrated the exemplary BEOL structure of FIG. **22** after forming a shunting metal structure **54** and removing the patterned mask **50**. The shunting metal structure **54** is formed by forming a shunting metal into the opening **52** by deposition and a recess etch. After the recess etch, the patterned mask **50** is removed utilizing any conventional material removal process. The shunting metal structure **54** can be composed of Ti, TiN, Ta, TaN, W, Ru, Rd, Co, Cu, Al, or any metallic alloys of the mentioned or other metals. The shunting metal structure **54** provides a bridge between the I-shaped SOT channels **18**C of the neighboring SOT MRAMs as well as forming a path for the read current of the memory cells.

[0100] Referring now to FIG. **24**, there is illustrated the exemplary BEOL structure of FIG. **23** after forming an upper interconnect dielectric layer **46** and second contact structures **48** in the upper interconnect dielectric layer **46**, each second contact structure **48** contacts a MRAM electrode of the SOT MRAMs. The illustrated structure shown in FIG. **24** is formed utilizing the materials and process streps mentioned in FIG. **17**A-**18**B above. Notably, the illustrated structure shown in FIG. **24** is formed by first forming the third interconnect dielectric layer **42** on the structure shown in FIG. **23**. After forming the third interconnect dielectric layer, the region including the electrically conductive via structure **12** is processed as described above to include the first contact structure **44** (thus the structure shown in FIG. **24** would be adjacent to the region including the electrically conductive via structure **12** having the first contact structure **44** (See, for example, FIG. **17**B). Additional interconnect dielectric material is then formed on the third interconnect dielectric layer **42** providing upper interconnect dielectric layer **46**, and thereafter the second contact structures **48** as formed providing the structure shown in FIG. **24**.

[0101] Notably, FIG. **24** (as well as FIGS. **34**A-**34**C to follow) illustrates a memory structure that includes a first SOT MRAM (left hand side of the drawing) and a second SOT MRAM (right hand side of the drawing), each of the first SOT MRAM and the second SOT MRAM includes spin conductor charge insulator layer **20** having a horizontal portion and a vertical portion, spin conductor layer **22** contacting the horizontal portion of the spin conductor charge insulator layer **20** and a first sidewall of the vertical portion of the spin conductor charge insulator layer **20**, MTJ structure **24** including a magnetic free layer, a magnetic tunnel barrier layer, and a magnetic reference layer in which the magnetic free layer is in direct physical contact with the spin conductor layer **22**, MTJ cap **26** contacting the MTJ structure **24**, MRAM electrode-containing hard mask **30** contacting the MTJ cap **26**, and I-shaped SOT channel **18**C located on a second sidewall of the vertical portion of the spin conductor charge insulator layer **20** and having a bottommost surface that is vertically offset from a bottommost surface of the spin conductor charge insulator layer **20**, wherein the second sidewall is opposite the first sidewall, and a dielectric pillar **14** located adjacent to, and in direct contact with, the I-shaped SOT channel.**18**C. In the memory structure, an interface between each of the spin conductor charge insulator layer, the spin conductor layer, the I-shaped SOT channel, the MTJ structure and the MTJ cap is a pure

material interface. The memory structure further includes a metal shunting structure **54** contacting a topmost surface of the I-shaped SOT channel **18**C of both the first SOT MRAM and the second SOT MRAM, and located on top of the dielectric pillar **14**.

[0102] In embodiments of the present application (See, for example, FIG. **24** and FIGS. **34**A-**34**C to follow), the structure further includes first interconnect dielectric layer **10** located beneath the dielectric pillar **14** and second interconnect dielectric layer **34** located on the first dielectric layer **10** and beneath the spin conductor charge insulator layer **20** of both the first SOT MRAM and the second SOT MRAM, wherein an electrically conductive via structure **12** is present in the first interconnect dielectric layer **10**.

[0103] In some embodiments of the present application (See, for example, FIG. **24** and FIGS. **34**A-**34**C to follow), the structure further includes void **36** located in the second interconnect dielectric layer **34** that is beneath the spin conductor charge insulator layer **20** of both the first SOT MRAM and the second SOT MRAM.

[0104] In some embodiments of the present application (See, for example, FIG. **24** and FIGS. **34**A-**34**C to follow), the structure further include upper interconnect dielectric layer **46** embedding the MTJ structure **24**, the MTJ cap **26** and the MRAM electrode-containing hard mask **30** of both the first SOT MRAM and the second SOT MRAM.

[0105] In some embodiments of the present application (See, for example, FIG. **24** and FIGS. **34**A-**34**C to follow), the structure further include first contact structure **44** and second contact structures **48** in the upper interconnect dielectric layer **46**, wherein the first contact structure **44** contacts the electrically conductive via structure **12** and one of the second contact structures **48** contacts the MRAM electrode-containing hard mask **30** of the first SOT MRAM and another of the second contact structures **48** contacts the MRAM-electrode containing hard mask **30** of the second SOT MRAM. The memory cell's write current is applied through via **12** and contact **44** to the SOT channel **18**C, to generate perpendicular spin. Second contact structure **48** is used to read the state of the memory cell by passing a read current through the MTJ.

[0106] In embodiments of the present application (See, for example, FIG. **24**), the metal shunting structure **54** contacts both the spin conductor charge insulator layer **20** and the spin conductor layer **22**.

[0107] Referring now to FIGS. **25**A and **25**B, there are illustrated another exemplary BEOL structure through cut A-A and B-B of FIG. **1** respectively, that can be employed in accordance with an embodiment of the present application. The exemplary BEOL structure illustrated in FIGS. **25**A and **25**B includes first interconnect dielectric layer **10**, electrically conductive via structure **12** embedded in the first interlayer dielectric layer **10** and a plurality of interconnect dielectric pillars **14**. The first interconnect dielectric layer **10**, the electrically conductive via structure **12**, and he dielectric pillars **14** of this embodiment include materials as mentioned above for the exemplary BEOL structure illustrated in FIGS. **2**A-**2**B. The exemplary BEOL structure illustrated in FIGS. **25**A and **25**B can be formed utilizing the same processing techniques mentioned above in forming the exemplary BEOL structure illustrated in FIGS. **2**A and **2**B. In the exemplary BEOL structure illustrated in FIGS. **25**A and **25**B, dielectric pillars **14** are formed along cut A-A and those dielectric pillars along cut A-A serve as anchoring structures and provide more stability during the subsequent removal of the sacrificial dielectric material from the exemplary BEOL structure illustrated in FIGS. **25**A and **25**B.

[0108] Referring now to FIGS. **26**A and **26**B, there are illustrated the exemplary BEOL structure shown in FIGS. **25**A and **25**B, respectively, after performing the processing steps illustrated in FIGS. **3**A-**8**B thereon. FIG. **26**C is also provided that illustrates the exemplary BEOL structure shown in FIGS. **26**A and **26**B, respectively, and through cut C-C of FIG. **1**. Notably, the exemplary BEOL structure shown in FIGS. **25**A and **25**B is subjected to processing steps that include: (i) forming the blanket layer of dielectric material **16**L on physically exposed surfaces of the first interconnect dielectric layer **10**, the electrically conductive via structure **12** and each dielectric pillar **14**; (ii), removing the blanket layer of dielectric material **16**L from the sidewall of the interconnect dielectric pillars **14**, while maintaining a first portion of the blanket layer of dielectric material (i.e., sacrificial dielectric layer **16**) on the first interconnect dielectric layer **10**, the electrically conductive via structure **12** and a second portion of the blanket layer of dielectric material (i.e., the dielectric cap **16**C) on top of the dielectric pillars **14**; (iii) forming a material stack of, from bottom to top, the blanket layer of SOT material **18**L, the blanket layer of spin conductor charge insulator material **20**L, the blanket layer of spin conductor material **22**L, the blanket layers of MTJ materials **24**L, the blanket layer of MTJ cap material **26**L, and the blanket layer of sacrificial hard mask material **28**; (iv) removing the material stack that is located on top of the dielectric cap **16**C that is on top of the dielectric pillars **14**; forming the blanket layer of MRAM electrode-containing hard mask material.**30**L; and (v) patterning the blanket layer of MRAM electrode-containing hard mask material **30**L and an upper portion of the remaining material stack. Each of processing steps (i)-(v) and materials used in those processing steps have been described in detail above with respect to FIGS. **3**A-**8**B.

[0109] Referring now to FIGS. **27**A-**27**C, there are the exemplary BEOL structure shown in FIGS. **26**A-**26**C, respectively, after performing the processing steps of FIGS. **9**A-**10**B thereon. Notably, the exemplary BEOL structure shown in FIGS. **26**A and **26**B is subjected to processing steps that include: (vi) forming dielectric spacer **32** along a sidewall of the MRAM electrode-containing hard mask **30** and a remaining portion of the upper portion of the material stack; and (vii) performing a directional etch to physically expose sacrificial dielectric layer **16**. Each of processing steps (vi)-(vii) and materials used in those processing steps have been described in detail above with respect to FIGS. **9**A-**10**B.

[0110] Referring now to FIGS. **28**A-**28**C, there are illustrated the exemplary BEOL structure shown in FIGS. **27**A-**27**C, respectively, after performing the processing step of FIGS. **11**A-**11**B thereon. Notably, the exemplary BEOL structure shown in FIGS. **27**A-**27**C is subjected a processing step (i.e., etch as described above for providing the exemplary BEOL structure shown in FIGS. **11**A and **11**B) that physically exposes a bottommost surface of the blanket layer of SOT material **18**L by removing the physically exposed sacrificial dielectric layer **16**.

[0111] Referring now to FIGS. **29**A-**29**C, there are illustrated the exemplary BEOL structure shown in FIGS. **28**A-**28**C, respectively, after performing the processing step of FIGS. **12**A-**12**B thereon. Notably, the exemplary BEOL

structure shown in FIGS. **28**A-**28**C is subjected a processing step (i.e., etch as described above for providing the exemplary BEOL structure shown in FIGS. **12**A and **12**B) that removes a horizontal component of the physically exposed blanket layer of SOT material **18**L and physically exposed a bottommost surface of the spin conductor charge insulator layer **20**.

[0112] Referring now to FIGS. **30**A-**30**C, there are illustrated the exemplary BEOL structure shown in FIGS. **29**A-**29**C, respectively, after performing the processing step of FIGS. **13**A-**13**B thereon. Notably, the exemplary BEOL structure shown in FIGS. **29**A-**29**C is subjected a processing step that includes forming (via deposition and planarization) second interconnect dielectric layer **34**. The second interconnect dielectric layer **34** can include voids **36**.

[0113] Referring now to FIGS. **31**A and **31**B, there are illustrated the exemplary BEOL structure shown in FIGS. **30**A and **30**B, respectively, after forming patterned masks **38** on MRAM electrode-containing hard mask **30**. Patterned masks **38** are formed and include materials as defined above for forming the patterned mask **38** in the exemplary BEOL structure shown in FIG. **19**.

[0114] Referring now to FIGS. **32**A and **32**B, there are illustrated the exemplary BEOL structure shown in FIGS. **31**A and **31**B, respectively, after performing an MTJ patterning process (as previously described above), and forming encapsulation liner **40**L (as previously described above), shunting metal **54** (as previously described above), and third interconnect dielectric layer **42** (as previously described above). Notably, the exemplary BEOL structure shown in FIGS. **31**A-**31**C are subjected to the various processing steps mentioned above in FIG. **20** (MTJ patterning), FIG. **21** (encapsulation liner **40**L formation), FIG. **22** (shunting area definition and opening), FIG. **23** (shunting metal **54** formation) and thereafter the third interconnect dielectric layer **42** is formed as described above for the other embodiments of the present application.

[0115] Referring now to FIGS. **33**A and **33**B, there are illustrated the exemplary BEOL structure shown in FIGS. **32**A and **32**B, respectively, after forming first contact structure **44** that contacts a surface of the electrically conductive via structure **12** embedded in the first interlayer dielectric layer **10**. The first contact structure **44** of this embodiment is the same as the first contact structure **44** formed in FIG. **17**B. Thus, the first contact structure **44** is formed using techniques and material as mentioned above in forming the first contact structure **44** shown in FIG. **17**B.

[0116] Referring now to FIGS. **34**A and **34**B, there are illustrated the exemplary BEOL structure shown in FIGS. **33**A and **33**B, respectively, after forming additional interconnect dielectric material on the third interconnect dielectric layer **42** (the additional interconnect dielectric material and the third interconnect dielectric layer **32** are collectively referred to as the upper interconnect dielectric layer **46** and forming second contact structures **48**. FIG. **34**C is also provided to show the exemplary BEOL structure shown in FIGS. **34**A and **34**B and through cut C-C of FIG. **1**. Each of the additional interconnect dielectric material, and the second contact structure **48** can be formed utilizing materials and processing techniques mentioned above for forming the same elements in FIGS. **18**A-**18**B.

[0117] Referring now to FIG. **35**, there is illustrated a SOT memory structure of the present application. The SOT memory structure illustrated in FIG. **35** is essentially identical to the SOT memory structure illustrated in FIG. **34**A except that in the shunting region of the structure the shunting metal **54** has been patterned into a first shunting metal structure **54**A and a second shunting metal structure **54**B, and a cell separating dielectric **56** is formed in a gap that is located between the first shunting metal structure **54**A and the second shunting metal structure **54**B. The SOT memory structure illustrated in FIG. **35** can be formed utilizing the same basic processing steps utilized in forming the SOT memory structure illustrated in FIG. **34**A except that the shunting metal structure **54** is patterned by lithography and etching and thereafter the cell separating dielectric **56** is formed into the gap be deposition and a recess etch. The cell separating dielectric **56** can be composed of any dielectric material such as, for example, silicon dioxide, silicon nitride, silicon oxynitride or any combination thereof.

[0118] Notably, FIG. **35** illustrates a memory structure that includes a first SOT MRAM (left hand side of the drawing) and a second SOT MRAM (right hand side of the drawing), each of the first SOT MRAM and the second SOT MRAM includes spin conductor charge insulator layer **20** having a horizontal portion and a vertical portion, spin conductor layer **22** contacting the horizontal portion of the spin conductor charge insulator layer **20** and a first sidewall of the vertical portion of the spin conductor charge insulator layer **20**, MTJ structure **24** including a magnetic free layer, a magnetic tunnel barrier layer, and a magnetic reference layer in which the magnetic free layer is in direct physical contact with the spin conductor layer **22**, MTJ cap **26** contacting the MTJ structure **24**, MRAM electrode-containing hard mask **30** contacting the MTJ cap **26**, and I-shaped SOT channel **18**C located on a second sidewall of the vertical portion of the spin conductor charge insulator layer **20** and having a bottommost surface that is vertically offset from a bottommost surface of the spin conductor charge insulator layer **20**, wherein the second sidewall is opposite the first sidewall, and a dielectric pillar **14** located adjacent to, and in direct contact with, the I-shaped SOT channel.**18**C. In the memory structure, an interface between each of the spin conductor charge insulator layer, the spin conductor layer, the I-shaped SOT channel, the MTJ structure and the MTJ cap is a pure material interface. The memory structure can further include a first metal shunting structure **54**A contacting a topmost surface of the I-shaped SOT channel **18**C of the first SOT MRAM, a second metal shunting structure **54**B contacting a topmost surface of the I-shaped SOT channel **18**C of the second SOT MRAM, and a cell separating dielectric **56** separating the first metal shunting structure **54**A from the second metal shunting structure **54**B and located above the dielectric pillar **14**. This embodiment enables a single MTJ per memory cell.

[0119] In embodiments of the present application (See, for example, FIG. **35**), the structure further includes first interconnect dielectric layer **10** located beneath the dielectric pillar **14** and second interconnect dielectric layer **34** located on the first dielectric layer **10** and beneath the spin conductor charge insulator layer **20** of both the first SOT MRAM and the second SOT MRAM, wherein an electrically conductive via structure **12** is present in the first interconnect dielectric layer **10**.

[0120] In some embodiments of the present application (See, for example, FIG. **35**), the structure further includes void **36** located in the second interconnect dielectric layer **34**

that is beneath the spin conductor charge insulator layer **20** of both the first SOT MRAM and the second SOT MRAM.

[0121] In some embodiments of the present application (See, for example, FIG. **35**), the structure further include upper interconnect dielectric layer **46** embedding the MTJ structure **24**, the MTJ cap **26** and the MRAM electrode-containing hard mask **30** of both the first SOT MRAM and the second SOT MRAM

[0122] In some embodiments of the present application (See, for example, FIG. **35**), the structure further include first contact structure **44** and second contact structures **48** in the upper interconnect dielectric layer **46**, wherein the first contact structure **44** contacts the electrically conductive via structure **12** and one of the second contact structures **48** contacts the MRAM electrode-containing hard mask **30** of the first SOT MRAM and another of the second contact structures **48** contacts the MRAM-electrode containing hard mask **30** of the second SOT MRAM. The memory cell's write current is applied through via **12** and contact **44** to the SOT channel **18**C, to generate perpendicular spin. Contact structure **48** is used to read the state of the memory cell by passing a read current through the MTJ.

[0123] In embodiments of the present application, (See, for example, FIG. **35**), the first metal shunting structure **54**A contacts both the spin conductor charge insulator layer **20** and the spin conductor layer **22** of the first SOT MRAM and the second metal shunting structure **54**B contacts both the spin conductor charge insulator layer **20** and the spin conductor layer **22** of the second SOT MRAM.

[0124] Referring now to FIG. **36**, there is illustrated an alternative memory structure in which the I-shaped SOT channel **18**C has a bottommost surface that is positioned above a bottommost surface of the spin conductor charge insulator layer **20** In all the other embodiments of the present application (See, for example, FIGS. **18**A-**18**B, **24** and **35**), the I-shaped SOT channel **18**C has a bottommost surface that is positioned below a bottommost surface of the spin conductor charge insulator layer **20**. In the present application, the structures illustrated in FIGS. **18**A-**18**B and **24** can be altered such that as a bottommost surface that is positioned above a bottommost surface of the spin conductor charge insulator layer **20**. FIG. **36** represents an altering of the position of the I-shaped SOT channel **18**C in the memory structure illustrated in FIG. **35**. The structure illustrated in FIG. **36** can be formed utilizing the processing steps as described herein.

[0125] While the present application has been particularly shown and described with respect to preferred embodiments thereof, it will be understood by those skilled in the art that the foregoing and other changes in forms and details may be made without departing from the spirit and scope of the present application. It is therefore intended that the present application not be limited to the exact forms and details described and illustrated, but fall within the scope of the appended claims.

What is claimed is:

1. A spin-orbit torque magnetic random access memory (SOT MRAM) structure comprising:

a spin conductor charge insulator layer having a horizontal portion and a vertical portion;

a spin conductor layer contacting the horizontal portion of the spin conductor charge insulator layer and a first sidewall of the vertical portion of the spin conductor charge insulator layer;

a MTJ structure comprising a magnetic free layer, a magnetic tunnel barrier layer, and a magnetic reference, wherein the magnetic free layer is in direct physical contact with the spin conductor layer;

a MTJ cap contacting the MTJ structure;

a MRAM electrode-containing hard mask contacting the MTJ cap;

an I-shaped SOT channel located on a second sidewall of the vertical portion of the spin conductor charge insulator layer and having a bottommost surface that is vertically offset from a bottommost surface of the spin conductor charge insulator layer, wherein the second sidewall is opposite the first sidewall, wherein an interface between each of the spin conductor charge insulator layer, the spin conductor layer, the I-shaped SOT channel, the MTJ structure and the MTJ cap is a pure material interface; and

a dielectric pillar located adjacent to, and in direct contact with, the I-shaped SOT channel.

2. The SOT MRAM structure of claim **1**, further comprising a first interconnect dielectric layer located beneath the dielectric pillar and a second interconnect dielectric layer located on the first dielectric layer and beneath the spin conductor charge insulator layer, wherein an electrically conductive via structure is present in the first interconnect dielectric layer.

3. The SOR MRAM structure of claim **2**, further comprising a void located in the second interconnect dielectric layer that is beneath the spin conductor charge insulator layer.

4. The SOT MRAM structure of claim **2**, further comprising an upper interconnect dielectric layer embedding the MTJ structure, the MTJ cap and the MRAM electrode-containing hard mask.

5. The SOT MRAM structure of claim **3**, further comprising a first contact structure and a second contact structure in the upper interconnect dielectric layer, wherein the first contact structure contacts the electrically conductive via structure and the second contact structure contact the MRAM electrode-containing hard mask.

6. The SOT MRAM structure of claim **1**, further comprising another MRAM electrode-containing hard mask located on top of the dielectric pillar and the I-shaped SOT channel, wherein a dielectric cap is located between the another MRAM electrode-containing hard mask and the dielectric pillar.

7. The SOT MRAM structure of claim **1**, a shunting metal structure located on a topmost surface of the I-shaped SOT channel.

8. The SOT MRAM structure of claim **1**, wherein the spin conductor charge insulator layer and the spin conductor layer are bounded on one side by the dielectric pillar and on another side by another dielectric pillar.

9. A memory structure comprising

a first spin-orbit torque magnetic random access memory (SOT MRAM) and a second SOT MRAM, each of the first SOT MRAM and the second SOT MRAM comprising a spin conductor charge insulator layer having a horizontal portion and a vertical portion, a spin conductor layer contacting the horizontal portion of the spin conductor charge insulator layer and a first sidewall of the vertical portion of the spin conductor charge insulator layer, a MTJ structure comprising a magnetic free layer, a magnetic tunnel barrier layer, and a mag-

netic reference, wherein the magnetic free layer is in direct physical contact with the spin conductor layer, a MTJ cap contacting the MTJ structure, a MRAM electrode-containing hard mask contacting the MTJ cap, and an I-shaped SOT channel located on a second sidewall of the vertical portion of the spin conductor charge insulator layer and having a bottommost surface that is vertically offset from a bottommost surface of the spin conductor charge insulator layer, wherein the second sidewall is opposite the first sidewall, and a dielectric pillar located adjacent to, and in direct contact with, the I-shaped SOT channel, wherein an interface between each of the spin conductor charge insulator layer, the spin conductor layer, the I-shaped SOT channel, the MTJ structure and the MTJ cap is a pure material interface; and

a metal shunting structure contacting a topmost surface of the I-shaped SOT channel of both the first SOT MRAM and the second SOT MRAM, and located on top of the dielectric pillar.

10. The memory structure of claim **9**, further comprising a first interconnect dielectric layer located beneath the dielectric pillar and a second interconnect dielectric layer located on the first dielectric layer and beneath the spin conductor charge insulator layer of both the first SOT MRAM and the second SOT MRAM, wherein an electrically conductive via structure is present in the first interconnect dielectric layer.

11. The memory structure of claim **10**, further comprising a void located in the second interconnect dielectric layer that is beneath the spin conductor charge insulator layer of both the first SOT MRAM and the second SOT MRAM.

12. The memory structure of claim **10**, further comprising an upper interconnect dielectric layer embedding the MTJ structure, the MTJ cap and the MRAM electrode-containing hard mask of both the first SOT MRAM and the second SOT MRAM.

13. The memory structure of claim **12**, further comprising a first contact structure and second contact structures in the upper interconnect dielectric layer, wherein the first contact structure contacts the electrically conductive via structure and one of the second contact structures contact the MRAM electrode-containing hard mask of the first SOT MRAM and another of the second contact structures contacts the MRAM-electrode containing hard mask of the second SOT MRAM.

14. The memory structure of claim **10**, wherein the metal shunting structure contacts both the spin conductor charge insulator layer and the spin conductor layer.

15. A memory structure comprising

a first spin-orbit torque magnetic random access memory (SOT MRAM) and a second SOT MRAM, each of the first SOT MRAM and the second SOT MRAM comprising a spin conductor charge insulator layer having a horizontal portion and a vertical portion, a spin conductor layer contacting the horizontal portion of the spin conductor charge insulator layer and a first sidewall of the vertical portion of the spin conductor charge insulator layer, a MTJ structure comprising a magnetic free layer, a magnetic tunnel barrier layer, and a magnetic reference, wherein the magnetic free layer is in direct physical contact with the spin conductor layer, a MTJ cap contacting the MTJ structure, a MRAM electrode-containing hard mask contacting the MTJ cap, and an I-shaped SOT channel located on a second sidewall of the vertical portion of the spin conductor charge insulator layer and having a bottommost surface that is vertically offset from a bottommost surface of the spin conductor charge insulator layer, wherein the second sidewall is opposite the first sidewall, and dielectric pillar located adjacent to, and in direct contact with, the I-shaped SOT channel, wherein an interface between each of the spin conductor charge insulator layer, the spin conductor layer, the I-shaped SOT channel, the MTJ structure and the MTJ cap is a pure material interface;

a first metal shunting structure contacting a topmost surface of the I-shaped SOT channel of the first SOT MRAM;

a second metal shunting structure contacting a topmost surface of the I-shaped SOT channel of the second SOT MRAM; and

a cell separating dielectric separating the first metal shunting structure from the second metal shunting structure and located above the dielectric pillar.

16. The memory structure of claim **15**, further comprising a first interconnect dielectric layer located beneath the dielectric pillar and a second interconnect dielectric layer located on the first dielectric layer and beneath the spin conductor charge insulator layer of both the first SOT MRAM and the second SOT MRAM, wherein an electrically conductive via structure is present in the first interconnect dielectric layer.

17. The memory structure of claim **16**, further comprising a void located in the second interconnect dielectric layer that is beneath the spin conductor charge insulator layer of both the first SOT MRAM and the second SOT MRAM.

18. The memory structure of claim **16**, further comprising an upper interconnect dielectric layer embedding the MTJ structure, the MTJ cap and the MRAM electrode-containing hard mask of both the first SOT MRAM and the second SOT MRAM.

19. The memory structure of claim **18**, further comprising a first contact structure and second contact structures in the upper interconnect dielectric layer, wherein the first contact structure contacts the electrically conductive via structure and one of the second contact structures contact the MRAM electrode-containing hard mask of the first SOT MRAM and another of the second contact structures contacts the MRAM-electrode containing hard mask of the second SOT MRAM.

20. The memory structure of claim **15**, wherein first metal shunting structure contacts both the spin conductor charge insulator layer and the spin conductor layer of the first SOT MRAM, and the second metal shunting structure contacts both the spin conductor charge insulator layer and the spin conductor layer of the second SOT MRAM.

* * * * *