US012386229B2

(12) **United States Patent**
Nakamura

(10) **Patent No.: US 12,386,229 B2**
(45) **Date of Patent: *Aug. 12, 2025**

(54) **DISPLAY DEVICE**

(71) Applicant: **Japan Display Inc.**, Tokyo (JP)

(72) Inventor: **Tenfu Nakamura**, Tokyo (JP)

(73) Assignee: **Japan Display Inc.**, Tokyo (JP)

(*) Notice: Subject to any disclaimer, the term of this patent is extended or adjusted under 35 U.S.C. 154(b) by 0 days.

This patent is subject to a terminal disclaimer.

(21) Appl. No.: **18/653,245**

(22) Filed: **May 2, 2024**

(65) **Prior Publication Data**

US 2024/0280870 A1 Aug. 22, 2024

Related U.S. Application Data

(63) Continuation of application No. 18/113,876, filed on Feb. 24, 2023, now Pat. No. 12,001,107, which is a (Continued)

(30) **Foreign Application Priority Data**

May 11, 2021 (JP) 2021-080435

(51) **Int. Cl.**
G02F 1/1362 (2006.01)
G02F 1/1334 (2006.01)
(Continued)

(52) **U.S. Cl.**
CPC ***G02F 1/136286*** (2013.01); ***G02F 1/1334*** (2013.01); ***G02F 1/13471*** (2013.01); ***G02F 1/1368*** (2013.01)

(58) **Field of Classification Search**
CPC G02F 1/136286; G02F 1/1334; G02F 1/13471; G02F 1/1368; G02F 1/133342; G02F 1/133616; G02F 1/133606
See application file for complete search history.

(56) **References Cited**

U.S. PATENT DOCUMENTS

12,001,107 B2 * 6/2024 Nakamura G02F 1/133616
2011/0116013 A1 5/2011 Sano et al.
(Continued)

FOREIGN PATENT DOCUMENTS

JP 2011-107299 A 6/2011
JP 2019-174531 A 10/2019

OTHER PUBLICATIONS

English translation of Office Action issued in related Japanese Patent Application No. 2017-229113 mailed on Sep. 7, 2021. 5 pages.

Primary Examiner — James R Greece
Assistant Examiner — Jose M Diaz
(74) *Attorney, Agent, or Firm* — K&L Gates LLP

(57) **ABSTRACT**

According to one embodiment, a display device including a first transparent substrate, a second transparent substrate, a liquid crystal layer, a third transparent substrate, and a transparent layer having a refractive index lower than a refractive index of the third transparent substrate, wherein the transparent layer includes a plurality of band portions including first to third band portions, a second end portion has a smaller width than a first end portion in band portions, the second end portion of the second band portion has a smaller width than the second end portion of the first band portion, and the second end portion of the third band portion has a smaller width than the second end portion of the first band portion.

20 Claims, 10 Drawing Sheets

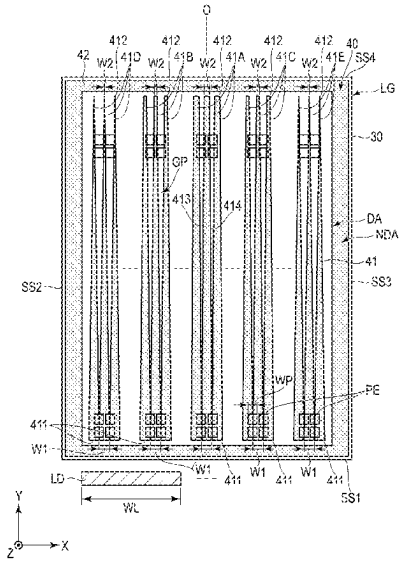

Related U.S. Application Data

continuation of application No. 17/741,579, filed on May 11, 2022, now Pat. No. 11,614,668.

(51) **Int. Cl.**
G02F 1/1347 (2006.01)
G02F 1/1368 (2006.01)

(56) **References Cited**

U.S. PATENT DOCUMENTS

2019/0302496	A1	10/2019	Okuyama
2021/0132279	A1	5/2021	Numata et al.
2022/0179269	A1	6/2022	Ikeda et al.

* cited by examiner

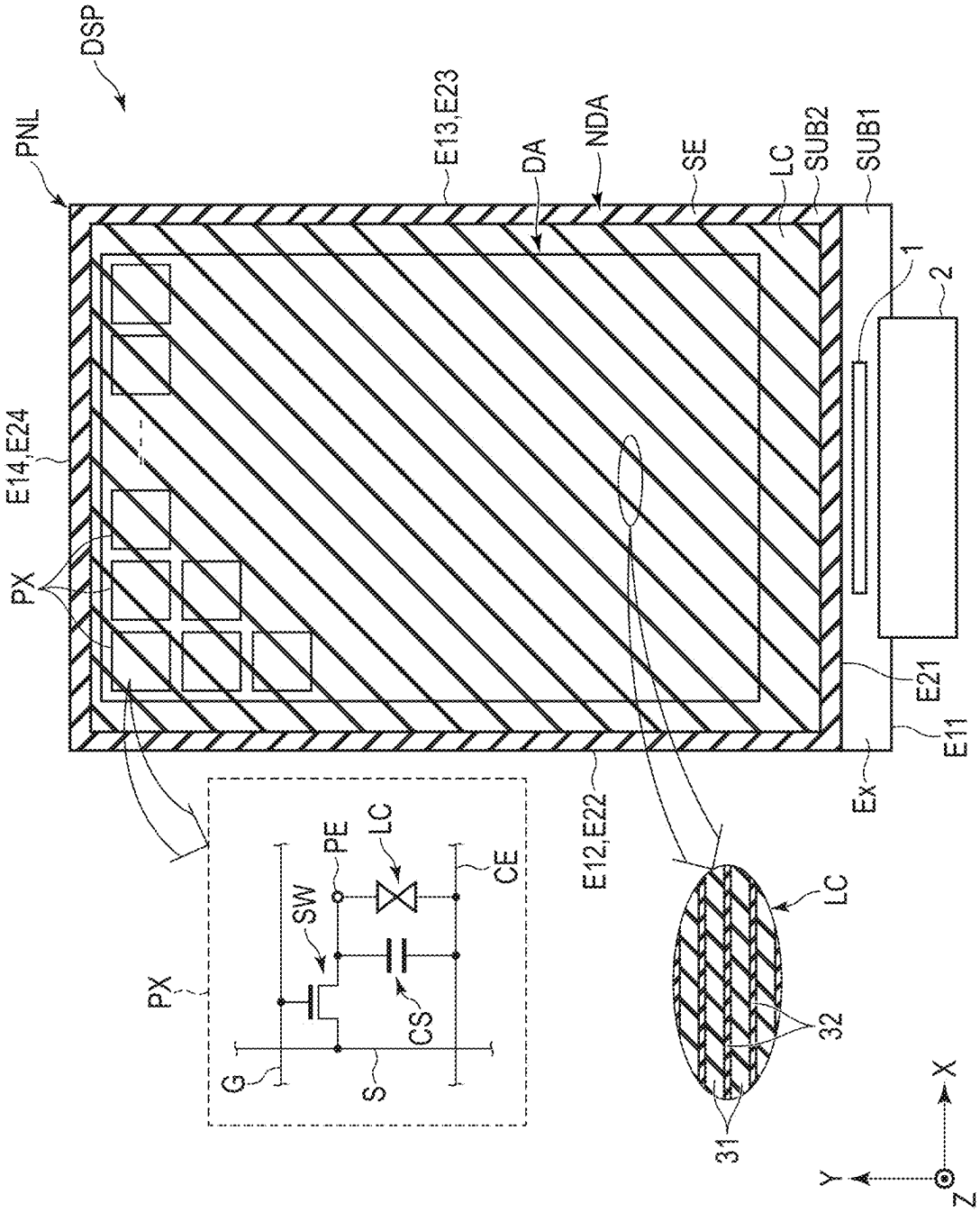
DSP
PNL
E13,E23
DA
NDA
SE
LC
SUB2
SUB1
1
2
E14,E24
PX
E21
E11
Ex
E12,E22
LC
32
31
PX
G
S
SW
PE
LC
CS
CE
X
Y
Z

FIG. 1

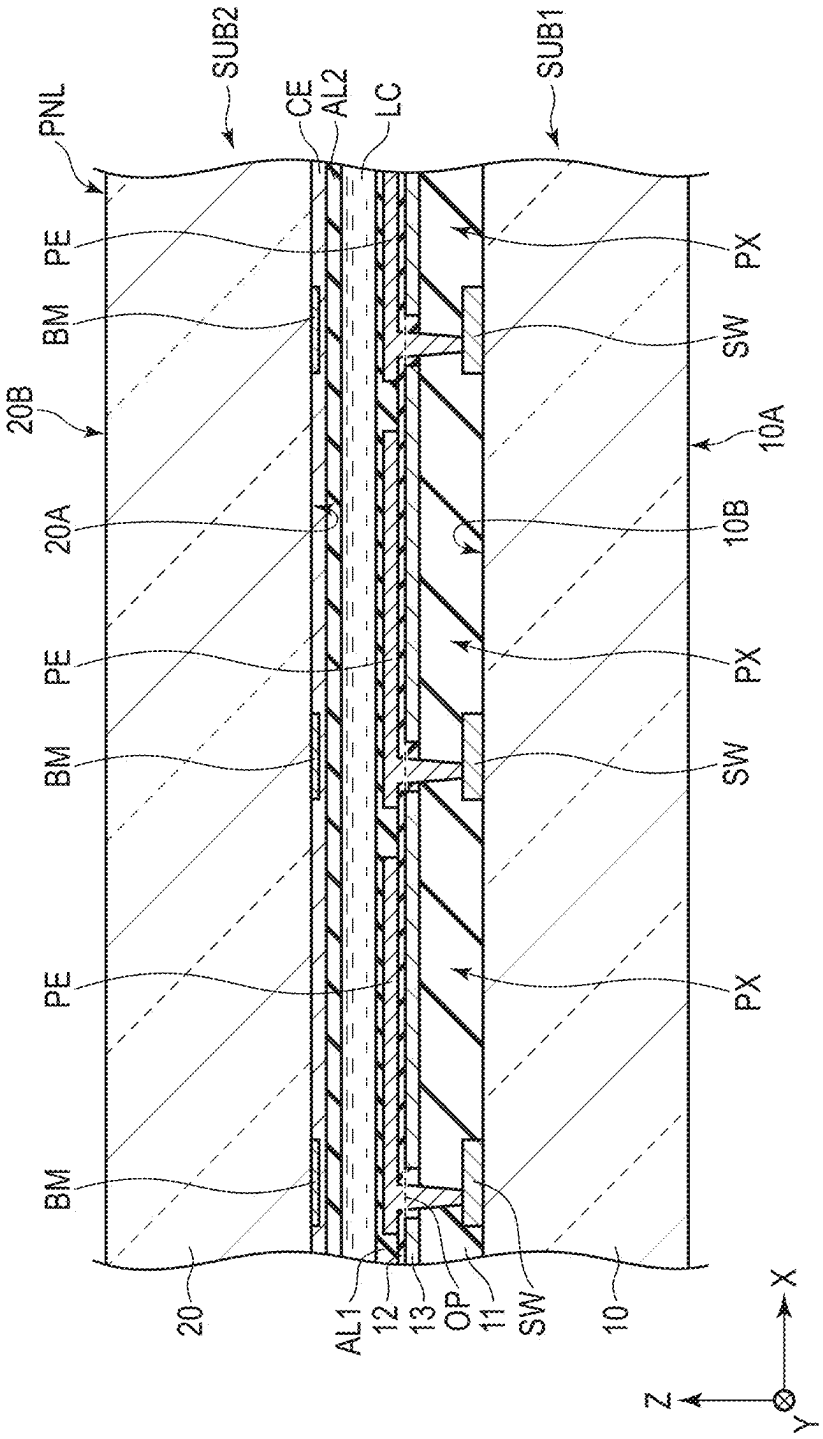
PNL
SUB2
CE
AL2
LC
SUB1
PE
BM
20B
20A
PE
BM
PE
BM
PX
SW
10A
10B
PX
SW
PX
20
AL1
12
13
OP
11
SW
10
Z
Y
X

FIG. 2

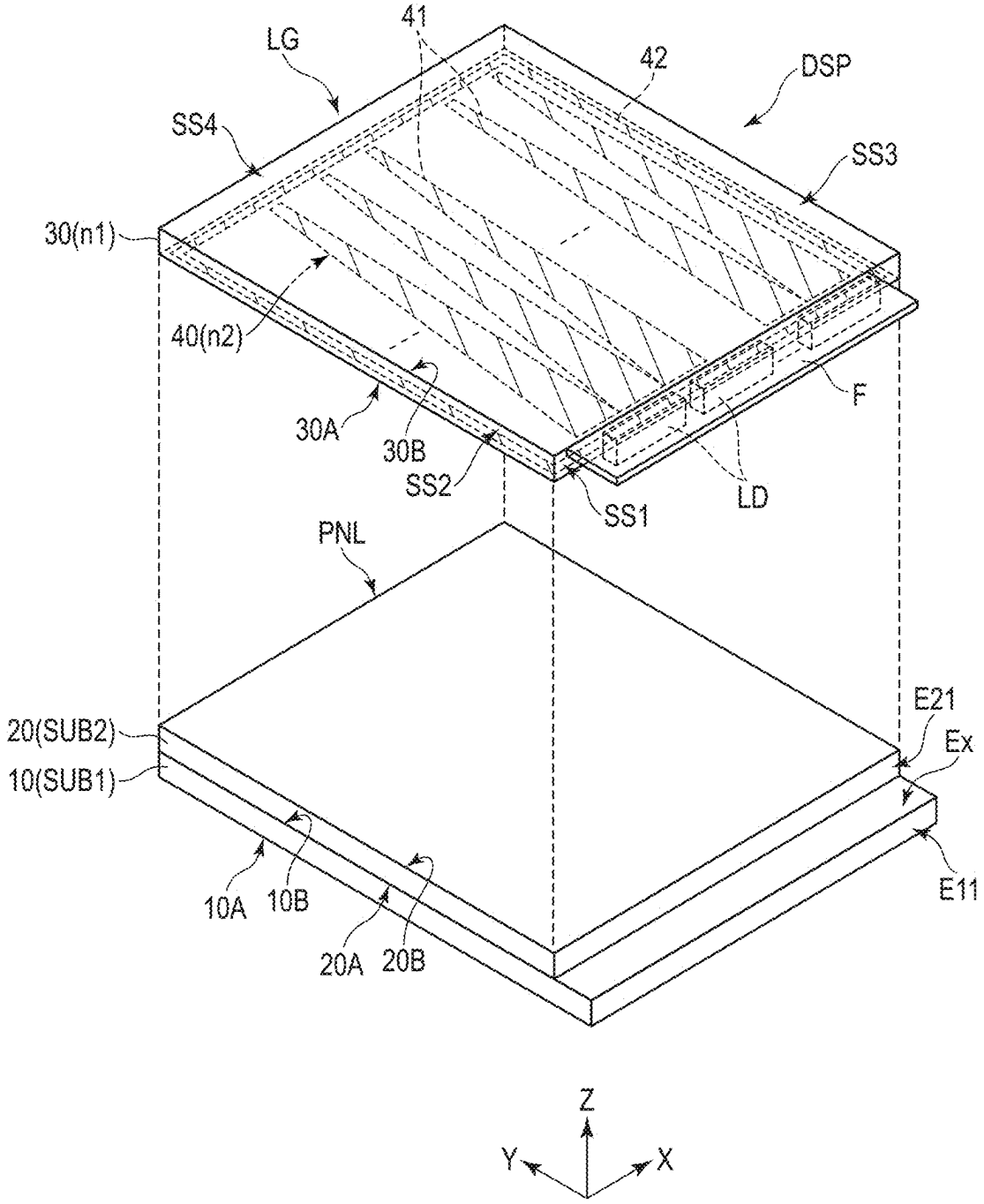
41
LG
42
DSP
SS4
SS3
30(n1)
40(n2)
F
30A
30B
SS2
SS1
LD
PNL
E21
20(SUB2)
Ex
10(SUB1)
10A
10B
E11
20A
20B
Z
Y
X

FIG. 3

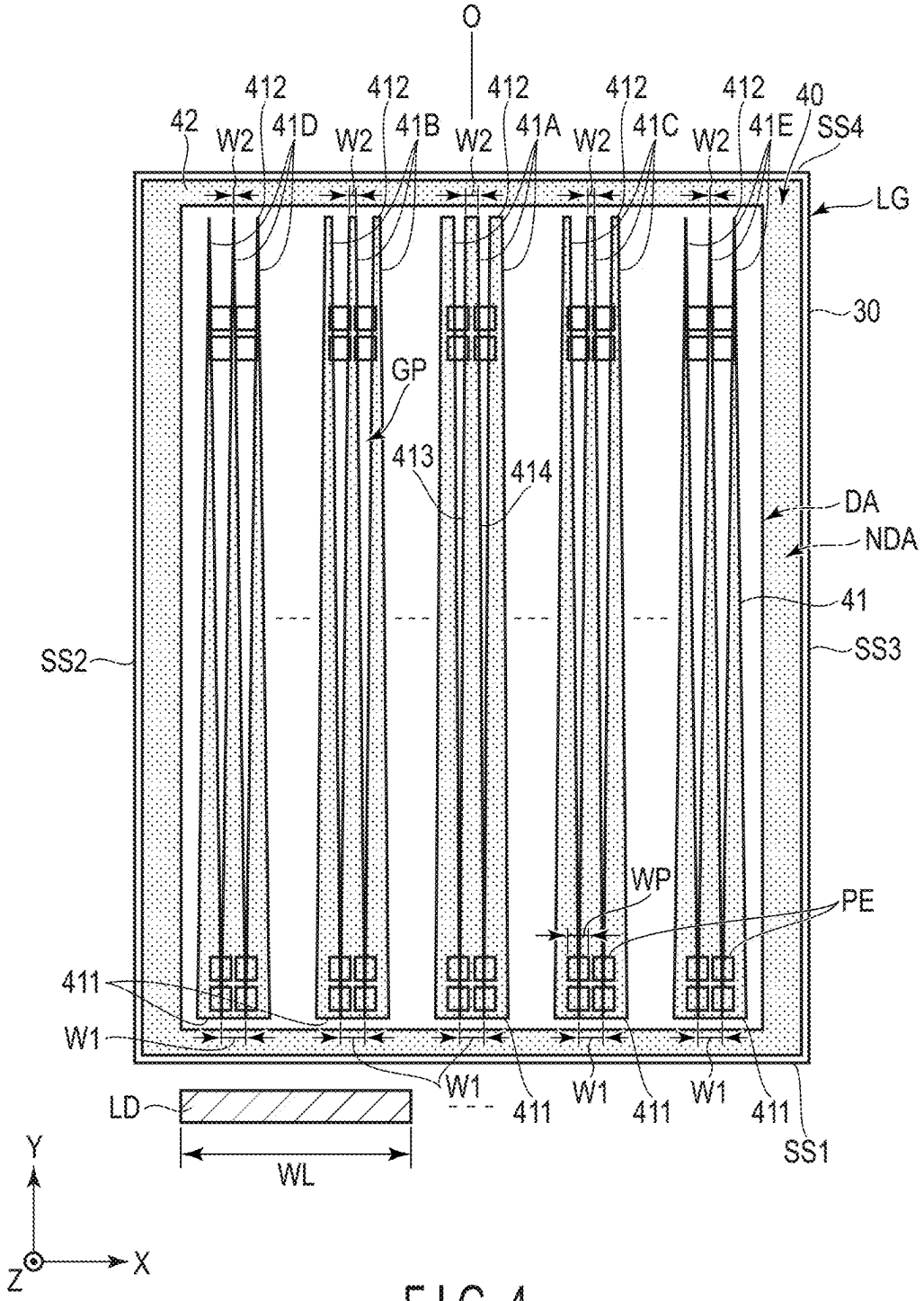
O
412
412
412
412
412
40
42
W2
41D
W2
41B
W2
41A
W2
41C
W2
41E
SS4
LG
30
GP
413
414
DA
NDA
41
SS2
SS3
WP
PE
411
W1
W1
411
W1
411
W1
411
SS1
LD
WL
Y
X
Z

FIG. 4

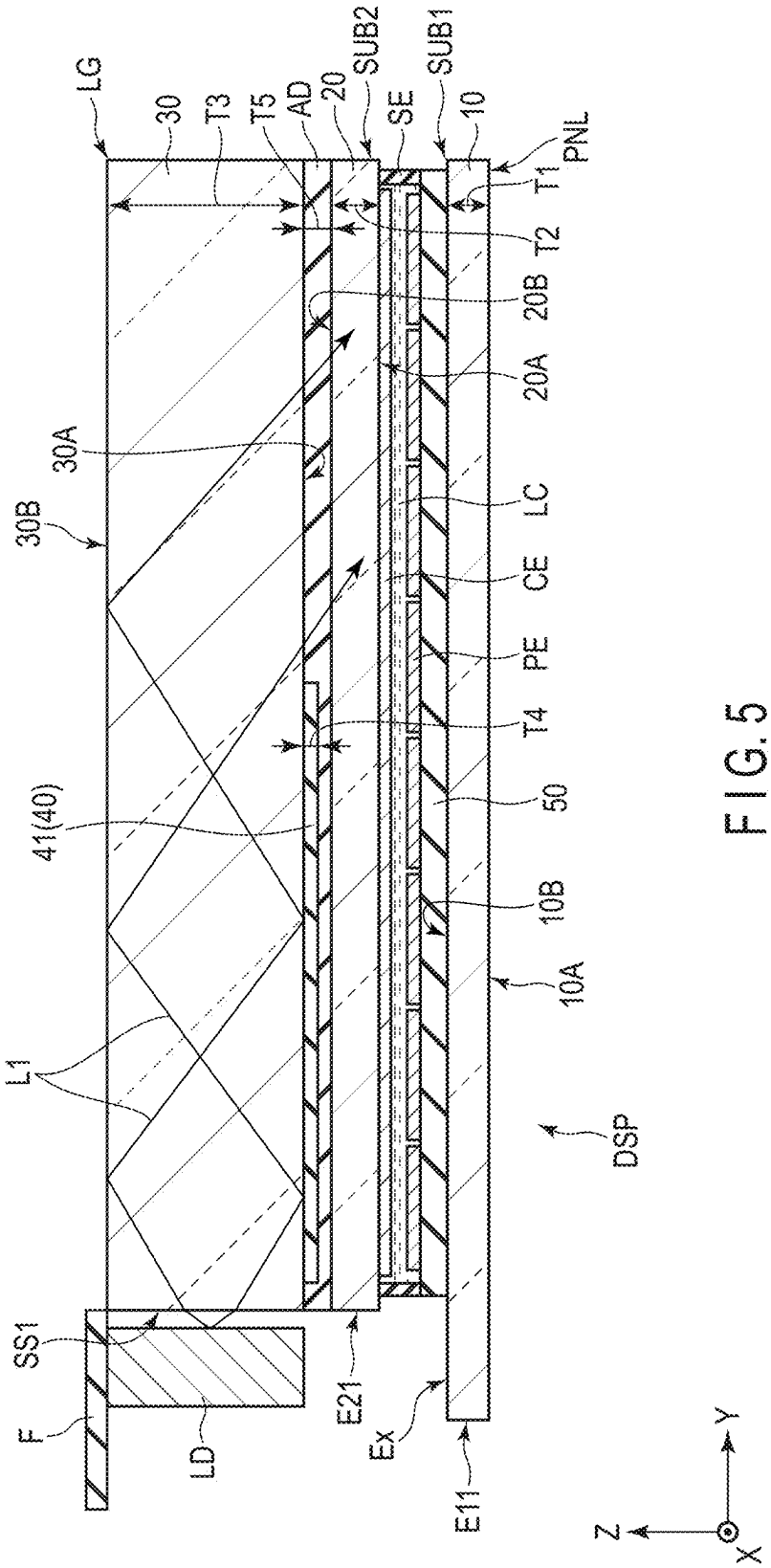
LG
30
T3
T5
AD
20
SUB2
SE
SUB1
10
PNL
T1
T2
20B
20A
30A
30B
LC
CE
PE
T4
50
41(40)
10B
10A
L1
DSP
SS1
F
LD
E21
Ex
E11
Z
Y
X

FIG. 5

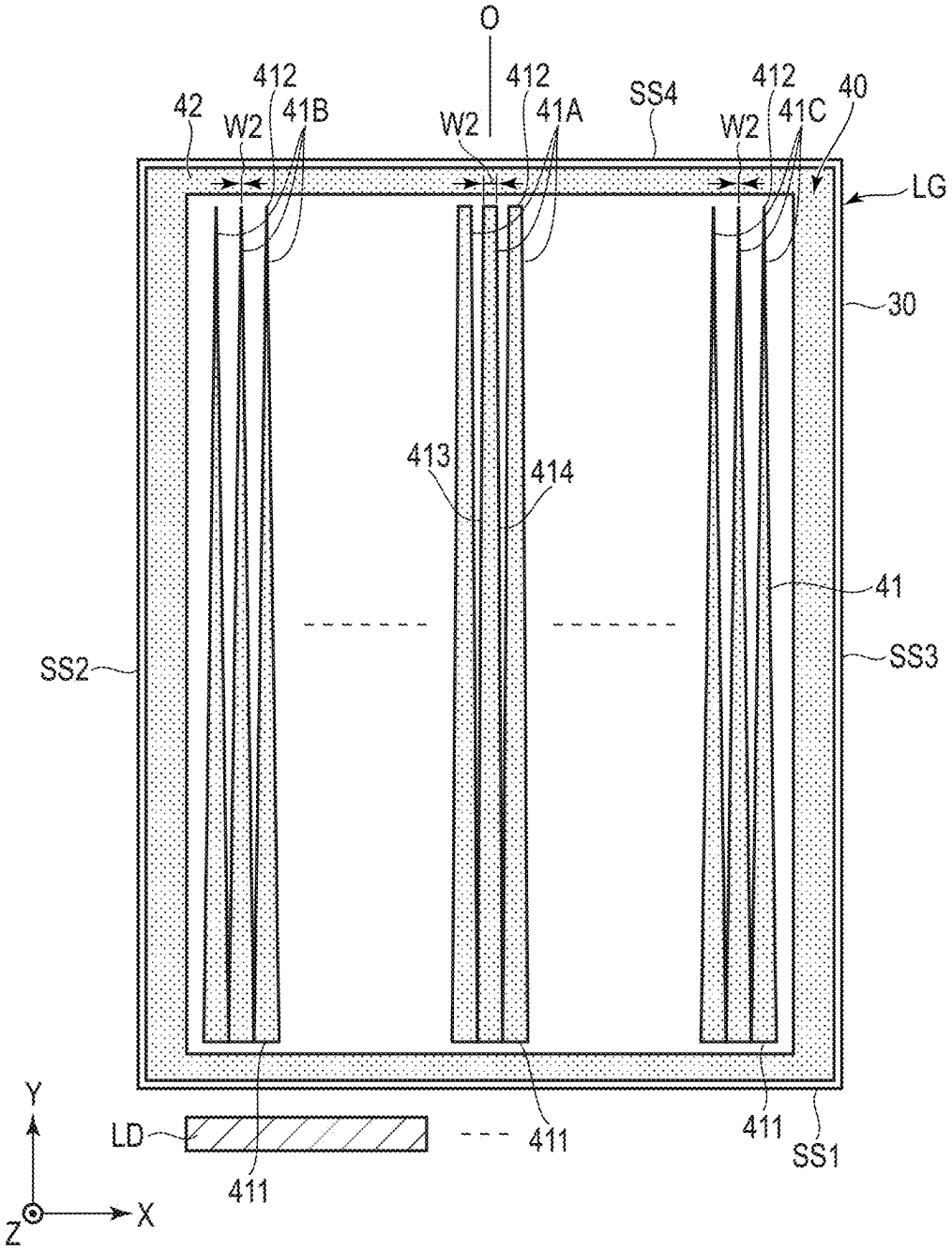
O
412
412
412
42
W2
41B
W2
41A
SS4
W2
41C
40
LG
30
413
414
41
SS2
SS3
Y
LD
411
411
SS1
411
Z
X

FIG. 6

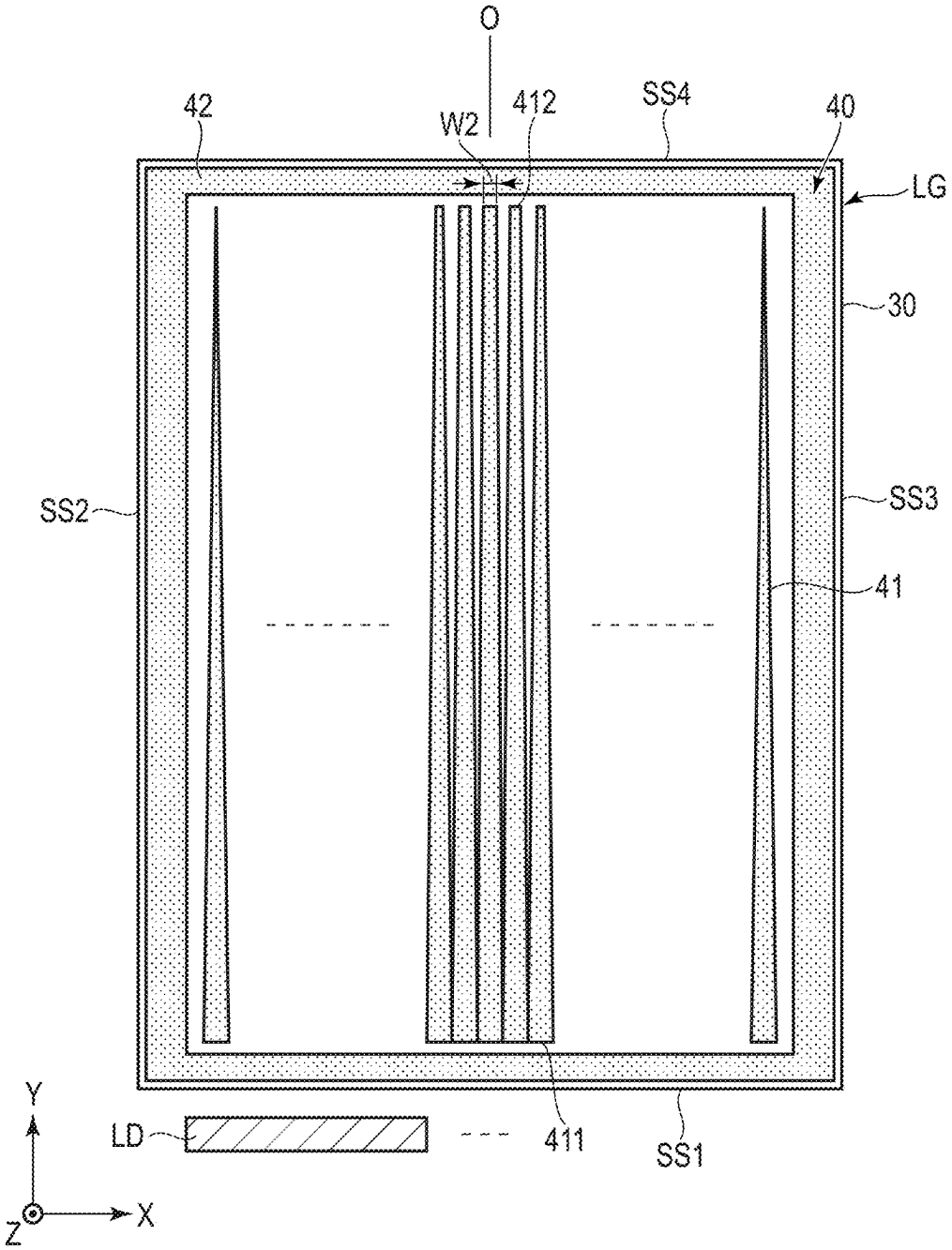

FIG. 7

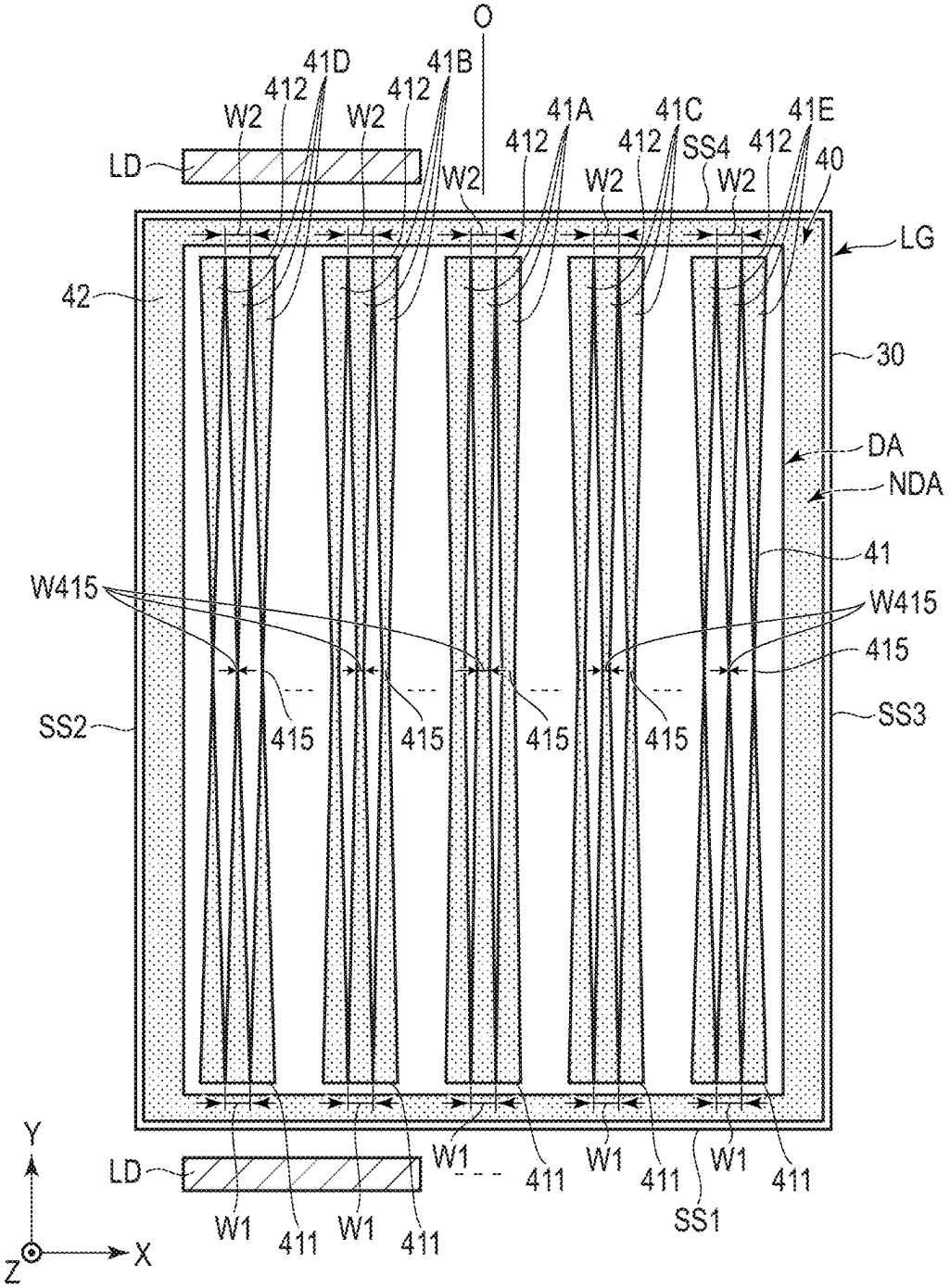
O
41D
41B
412
412
W2
W2
41A
41C
41E
412
412
SS4
412
40
LD
W2
W2
W2
LG
42
30
DA
NDA
41
W415
W415
415
SS2
415
415
415
415
SS3
Y
LD
W1
411
W1
411
W1
411
W1
411
SS1
Z
X

FIG. 8

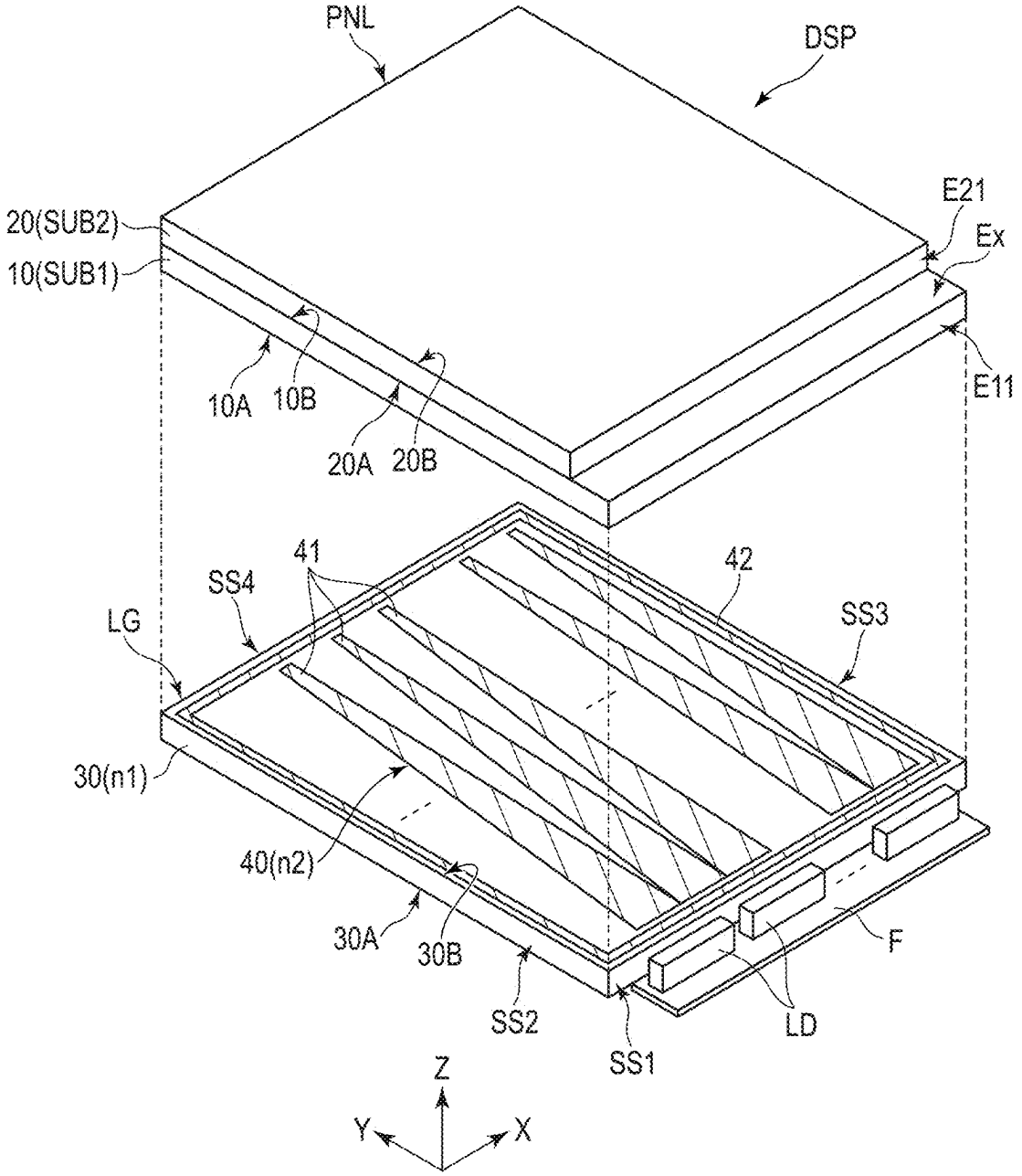
PNL
DSP
20(SUB2)
10(SUB1)
E21
Ex
E11
10A
10B
20A
20B
41
42
SS4
SS3
LG
30(n1)
40(n2)
30A
30B
SS2
SS1
LD
F
Z
Y
X

FIG. 9

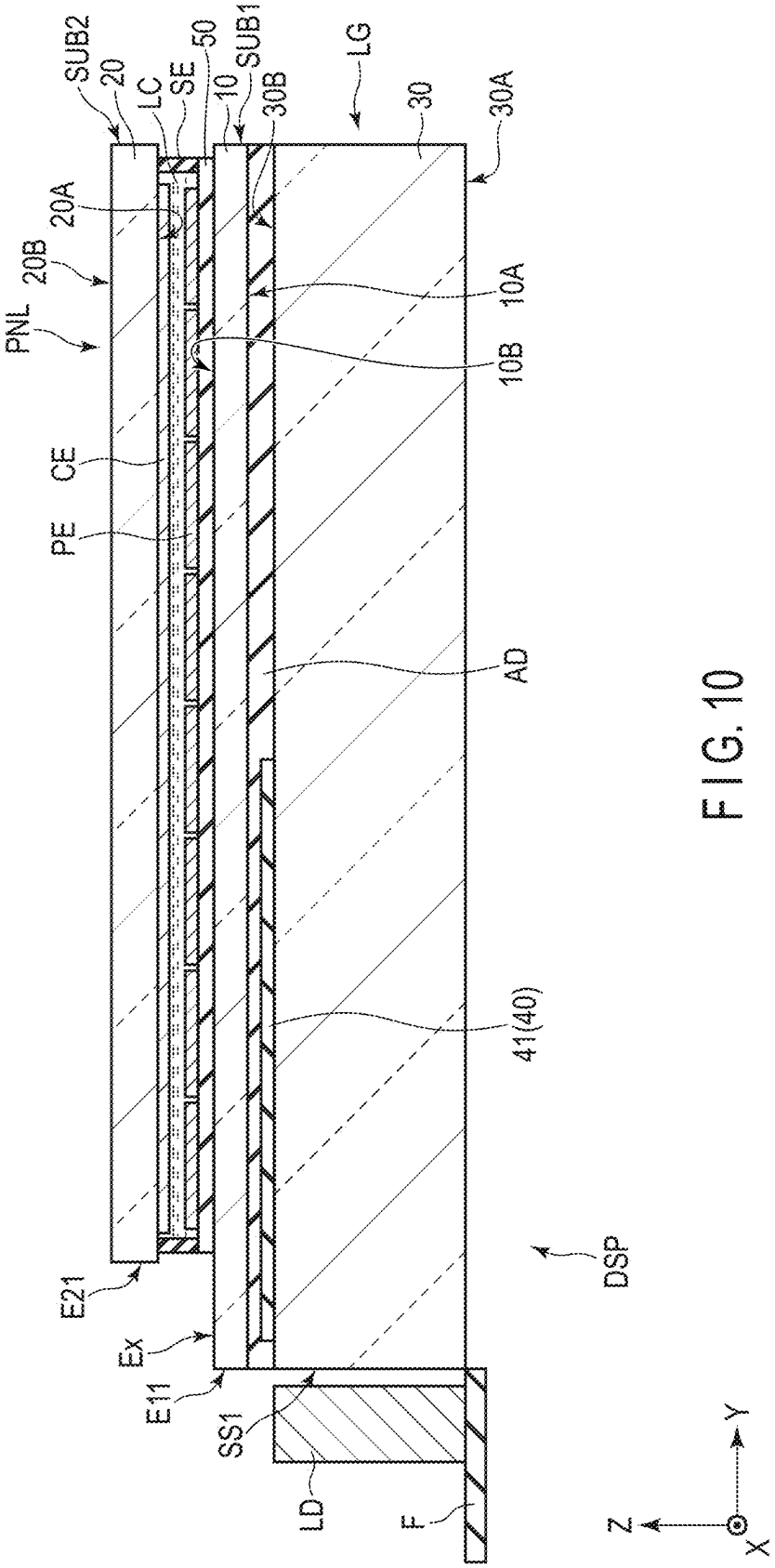
SUB2
20
LC
SE
50
SUB1
10
30B
LG
30
30A
20A
20B
PNL
10A
10B
CE
PE
AD
41(40)
DSP
E21
Ex
E11
SS1
LD
F
Z
Y
X

FIG. 10

DISPLAY DEVICE

CROSS-REFERENCE TO RELATED APPLICATIONS

This application is a continuation of U.S. patent application Ser. No. 18/113,876, filed on Feb. 24, 2023, which is a continuation of U.S. patent application Ser. No. 17/741,579, filed on May 11, 2022, now U.S. Pat. No. 11,614,668, issued on Mar. 28, 2023, which application is based upon and claims the benefit of priority from Japanese Patent Application No. 2021-080435, filed May 11, 2021, the entire contents of all of which are incorporated herein by reference.

FIELD

Embodiments described herein relate generally to a display device.

BACKGROUND

A display device capable of switching between a scattered state in which incident light is scattered and a transmissive state in which incident light is transmitted using a polymer dispersed liquid crystal (PDLC) has been proposed. This is intended to prevent reflection and the like, and is a technique of partially applying a voltage to the PDLC to switch between transmission and scattering. In a transparent display device using a PDLC, an edge light system in which a light source is disposed at an end portion of a light guide plate is adopted. However, when the edge light system is used in the PDLC display device, there is a problem that the luminance of the display surface decreases as the distance from the light source increases. In addition, since the amount of light reaching from the light source decreases as it is closer to the left and right sides of the display surface, there is a problem that a luminance difference occurs between the center and the left and right of the display surface.

BRIEF DESCRIPTION OF THE DRAWINGS

FIG. **1** is a plan view showing a configuration example of a display device according to the embodiment.

FIG. **2** is a cross-sectional view showing a configuration example of a display panel shown in FIG. **1**.

FIG. **3** is an exploded perspective view showing a main part of the display device shown in FIG. **1**.

FIG. **4** is a plan view showing a configuration example of a light guide element shown in FIG. **3**.

FIG. **5** is a schematic cross-sectional view of the display device shown in FIG. **3** along a second direction.

FIG. **6** is a plan view showing another configuration example of the light guide element shown in FIG. **4**.

FIG. **7** is a plan view showing another configuration example of the light guide element shown in FIG. **4**.

FIG. **8** is a plan view showing another configuration example of the light guide element shown in FIG. **4**.

FIG. **9** is an exploded perspective view showing another configuration example of the display device shown in FIG. **3**.

FIG. **10** is a schematic cross-sectional view of the display device shown in FIG. **9** along the second direction.

DETAILED DESCRIPTION

In general, according to one embodiment, a display device comprising a first substrate comprising a first transparent

substrate, a scanning line, a signal line intersecting with the scanning line, a switching element electrically connected to the scanning line and the signal line, and a pixel electrode electrically connected to the switching element, a second substrate comprising a second transparent substrate and a common electrode opposed to the pixel electrode, a liquid crystal layer held between the first substrate and the second substrate and including streaky polymers and liquid crystal molecules, a plurality of light emitting elements arranged in a first direction, a third transparent substrate comprising a main surface, a first side surface opposed to the light emitting elements, a second side surface intersecting with the first side surface, and a third side surface intersecting with the first side surface and opposed to the second side surface, and a transparent layer disposed on the main surface and having a refractive index lower than a refractive index of the third transparent substrate, wherein the third transparent substrate is bonded to the first transparent substrate or the second transparent substrate with the transparent layer interposed therebetween, the transparent layer comprises a plurality of band portions arranged in the first direction and extending in a second direction intersecting with the first direction, the band portion comprises a first end portion on the light emitting element side, and a second end portion opposite to the first end portion, the second end portion has a smaller width than the first end portion, the band portion includes a first band portion, a second band portion located between the first band portion and the second side surface, and a third band portion located between the first band portion and the third side surface, the second end portion of the second band portion has a smaller width than the second end portion of the first band portion, and the second end portion of the third band portion has a smaller width than the second end portion of the first band portion.

According to another embodiment, a display device comprising a first substrate comprising a first transparent substrate, a scanning line, a signal line intersecting with the scanning line, a switching element electrically connected to the scanning line and the signal line, and a pixel electrode electrically connected to the switching element, a second substrate comprising a second transparent substrate and a common electrode opposed to the pixel electrode, a liquid crystal layer held between the first substrate and the second substrate and including streaky polymers and liquid crystal molecules, a plurality of light emitting elements arranged in a first direction, a third transparent substrate comprising a main surface, a first side surface opposed to the light emitting elements, a second side surface intersecting with the first side surface, and a third side surface intersecting with the first side surface and opposed to the second side surface, and a transparent layer disposed on the main surface and having a refractive index lower than a refractive index of the third transparent substrate, wherein the transparent layer is located between the liquid crystal layer and the third transparent substrate, the transparent layer comprises a plurality of band portions arranged in the first direction and extending in a second direction intersecting with the first direction, the band portion comprises a first end portion on the light emitting element side, a second end portion opposite to the first end portion, and an intermediate portion between the first end portion and the second end portion, the first end portion has a larger width than the intermediate portion, the second end portion has a larger width than the intermediate portion, the band portion includes a first band portion, a second band portion located between the first band portion and the second side surface, and a third band portion located between the first band portion and the third side

surface, the intermediate portion of the second band portion has a smaller width than the intermediate portion of the first band portion, and the intermediate portion of the third band portion has a smaller width than the intermediate portion of the first band portion.

Embodiments will be described hereinafter with reference to the accompanying drawings. The disclosure is merely an example, and proper changes within the spirit of the invention, which are easily conceivable by a skilled person, are included in the scope of the invention as a matter of course. In addition, in some cases, in order to make the description clearer, the widths, thicknesses, shapes, etc., of the respective parts are schematically illustrated in the drawings, compared to the actual modes. However, the schematic illustration is merely an example, and adds no restrictions to the interpretation of the invention. Besides, in the specification and drawings, the same or similar elements as or to those described in connection with preceding drawings or those exhibiting similar functions are denoted by like reference numerals, and a detailed description thereof is omitted unless otherwise necessary.

FIG. **1** is a plan view schematically showing a configuration of a display device DSP according to the embodiment.

For example, a first direction X, a second direction Y and a third direction Z are orthogonal to each other, but they may intersect at an angle other than 90 degrees. The first direction X and the second direction Y correspond to the directions parallel to a main surface of a substrate that constitutes the display device DSP. The third direction Z is equivalent to a thickness direction of the display device DSP. In the following descriptions, a direction from a first substrate SUB**1** towards a second substrate SUB**2** is referred to as "upward" (or simply, above) and a direction from the second substrate SUB**2** towards the first substrate SUB**1** is referred to as "downward" (or simply, below). With such expressions "a second member above a first member" and "a second member below a first member", the second member may be in contact with the first member or may be remote from the first member. Further, it is assumed that there is an observation position to observe the display device DSP on a tip side of an arrow in a third direction Z, and viewing from this observation position toward the X-Y plane defined by the first direction X and the second direction Y is referred to as a planar view.

In the present embodiment, a liquid crystal display device to which a polymer dispersed liquid crystal is applied will be described as an example of a display device DSP. The display device DSP includes a display panel PNL, an IC chip **1**, and a wiring board **2**.

The display panel PNL includes a first substrate SUB**1**, a second substrate SUB**2**, a liquid crystal layer LC, and a sealant SE. The first substrate SUB**1** and the second substrate SUB**2** are formed in a flat plate shape parallel to the X-Y plane. The first substrate SUB**1** and the second substrate SUB**2** overlap each other in planar view. The first substrate SUB**1** and the second substrate SUB**2** are bonded together by the sealant SE. The liquid crystal layer LC is held between the first substrate SUB**1** and the second substrate SUB**2**, and is sealed by the sealant SE. In FIG. **1**, the liquid crystal layer LC and the sealant SE are indicated by different hatch lines.

As shown schematically in an enlarged manner in FIG. **1**, the liquid crystal layer LC includes a polymer dispersed liquid crystal containing polymers **31** and liquid crystal molecules **32**. For example, the polymers **31** are liquid crystal polymers. The polymers **31** are formed in a streak shape extending along the first direction X. The liquid crystal molecules **32** are dispersed in gaps between the polymers **31**, and are aligned such that their major axes are along the first direction X. Each of the polymers **31** and the liquid crystal molecules **32** has optical anisotropy or refractive anisotropy. The responsiveness of the polymers **31** to an electric field is lower than the responsiveness of the liquid crystal molecules **32** to the electric field.

For example, the alignment direction of the polymers **31** hardly changes regardless of the presence or absence of the electric field. In contrast, the alignment direction of the liquid crystal molecules **32** changes according to the electric field in a state where a high voltage equal to or higher than a threshold value is applied to the liquid crystal layer LC. In a state where no voltage is applied to the liquid crystal layer LC, the optical axes of the polymers **31** and the liquid crystal molecules **32** are parallel to each other, and the light incident on the liquid crystal layer LC is transmitted almost without being scattered in the liquid crystal layer LC (transparent state). In a state where a voltage is applied to the liquid crystal layer LC, the optical axes of the polymers **31** and the liquid crystal molecules **32** intersect with each other, and the light incident on the liquid crystal layer LC is scattered in the liquid crystal layer LC (scattered state).

The display panel PNL includes a display portion DA configured to display an image and a frame-shaped non-display portion NDA that surrounds the display portion DA. The sealant SE is located in the non-display portion NDA. The display portion DA includes pixels PX arrayed in a matrix in the first direction X and the second direction Y.

As shown in an enlarged manner in FIG. **1**, each pixel PX includes a switching element SW, a pixel electrode PE, a common electrode CE, a liquid crystal layer LC, and the like. The switching element SW is constructed from, for example, a thin-film transistor (TFT) and is electrically connected to a scanning line G and a signal line S. The scanning line G is electrically connected to the switching element SW in each of the pixels PX arranged in the first direction X. The signal line S is electrically connected to the switching element SW in each of the pixels PX arranged in the second direction Y. The signal line S intersects with the scanning line G. The pixel electrode PE is electrically connected to the switching element SW. Each of the pixel electrodes PEs is opposed to the common electrode CE, and the liquid crystal layer LC (in particular, liquid crystal molecules **32**) is driven by an electric field generated between the pixel electrode PE and the common electrode CE. The scanning line G, the signal line S, the switching element SW, and the pixel electrode PE are provided in the first substrate SUB**1**. A capacitance CS is formed, for example, between an electrode having the same electric potential as the common electrode CE and an electrode having the same electric potential as the pixel electrode PE.

The first substrate SUB**1** has edge portions E**11** and E**14** extending along the first direction X and edge portions E**12** and E**13** extending along the second direction Y. The second substrate SUB**2** has edge portions E**21** and E**24** extending along the first direction X and edge portions E**22** and E**23** extending along the second direction Y. In the example shown in FIG. **1**, the edge portions E**12** and E**22**, the edge portions E**13** and E**23**, and the edge portions E**14** and E**24** overlap each other in planar view, but may not overlap each other. The edge portion E**21** is located between the edge portion E**11** and the display portion DA in planar view. The first substrate SUB**1** has an extended portion Ex between the edge portion E**11** and the edge portion E**21**.

Each of the IC chip **1** and the wiring board **2** is connected to the extended portion Ex. The IC chip **1** incorporates, for

example, a display driver that outputs a signal necessary for image display. The wiring board **2** is, for example, a bendable flexible printed circuit board. Incidentally, the IC chip **1** may be connected to the wiring board **2**. The IC chip **1** and the wiring board **2** may read a signal from the display panel PNL, but primarily function as a signal source that supplies a signal to the display panel PNL.

FIG. **2** is a cross-sectional view showing a configuration example of the display panel PNL shown in FIG. **1**.

The first substrate SUB**1** includes a transparent substrate (first transparent substrate) **10**, insulating films **11** and **12**, a capacitive electrode **13**, the switching element SW, the pixel electrode PE, and an alignment film AL**1**. The first substrate SUB**1** further includes the scanning lines G and the signal lines S shown in FIG. **1**.

The transparent substrate **10** includes a main surface (lower surface) **10**A and a main surface (upper surface) **10**B opposite to the main surface **10**A. The switching element SW is disposed on the main surface **10**B. The insulating film **11** covers the switching element SW. The capacitive electrode **13** is located between the insulating films **11** and **12**. The pixel electrode PE is disposed on the insulating film **12** for each pixel PX. The pixel electrode PE is electrically connected to the switching element SW via an opening portion OP of the capacitive electrode **13**. The pixel electrode PE overlaps the capacitive electrode **13** with the insulating film **12** interposed therebetween to form the capacitance CS of the pixel PX. The alignment film AL**1** covers the pixel electrode PE.

The second substrate SUB**2** includes a transparent substrate (second transparent substrate) **20**, a light-shielding layer BM, the common electrode CE, and an alignment film AL**2**.

The transparent substrate **20** includes a main surface (lower surface) **20**A and a main surface (upper surface) **20**B opposite to the main surface **20**A. The main surface **20**A of the transparent substrate **20** faces the main surface **10**B of the transparent substrate **10**. The light-shielding layer BM and the common electrode CE are disposed on the main surface **20**A. The light-shielding layer BM is located, for example, directly above the switching element SW and directly above the scanning line G and the signal line S (not shown). The common electrode CE is disposed over a plurality of pixels PX and directly covers the light-shielding layer BM. The common electrode CE is opposed to the pixel electrode PE. The common electrode CE is electrically connected to the capacitive electrode **13**, and has the same electric potential as the capacitive electrode **13**. The alignment film AL**2** covers the common electrode CE. The liquid crystal layer LC is located between the main surface **10**B and the main surface **20**A and is in contact with the alignment films AL**1** and AL**2**.

The transparent substrates **10** and **20** are insulating substrates such as glass substrates or flexible resin substrates. The main surfaces **10**A and **10**B and the main surfaces **20**A and **20**B are planes substantially parallel to the X-Y plane. The insulating film **11** is formed of a transparent insulating material such as silicon oxide, silicon nitride, silicon oxynitride, and acrylic resin. For example, the insulating film **11** includes an inorganic insulating film and an organic insulating film. The insulating film **12** is an inorganic insulating film such as silicon nitride. The capacitive electrode **13**, the pixel electrode PE, and the common electrode CE are transparent electrodes formed of a transparent conductive material such as indium tin oxide (ITO) or indium zinc oxide (IZO). The light-shielding layer BM is, for example, a conductive layer having a lower resistance than the common electrode CE. For example, the light-shielding layer BM is formed of an untransparent metal material such as molybdenum, aluminum, tungsten, titanium, or silver. The alignment films AL**1** and AL**2** are horizontal alignment films having an alignment restriction force approximately parallel to the X-Y plane. For example, the alignment films AL**1** and AL**2** are subjected to alignment treatment along the first direction X. Incidentally, the alignment treatment may be rubbing treatment or optical alignment treatment.

FIG. **3** is an exploded perspective view showing a main part of the display device DSP shown in FIG. **1**.

The display device DSP includes a plurality of light emitting elements LD and a light guide element LG in addition to the display panel PNL. The first substrate SUB**1**, the second substrate SUB**2**, and the light guide element LG are arranged in this order along the third direction Z.

The plurality of light emitting elements LD is arranged spaced apart in the first direction X. The plurality of light emitting elements LD is connected to a wiring board F. The light emitting element LD is, for example, a light-emitting diode. The light emitting element LD includes a red light emitting portion, a green light emitting portion, and a blue light emitting portion though not described in detail. The light emitted from the light emitting element LD travels along an arrow direction indicating the second direction Y.

The light guide element LG includes a transparent substrate (third transparent substrate) **30** and a transparent layer **40**.

The transparent substrate **30** is an insulating substrate such as a glass substrate or a plastic substrate, and has a refractive index n**1**. For example, the transparent substrate **30** is not formed by laminating a plurality of substrates, but is a single substrate. The transparent substrate **30** includes a main surface (lower surface) **30**A, a main surface (upper surface) **30**B opposite to the main surface **30**A, a first side surface SS**1**, a second side surface SS**2**, a third side surface SS**3**, and a fourth side surface SS**4**. The main surfaces **30**A and **30**B are planes substantially parallel to the X-Y plane. The main surface **30**A is opposed to the main surface **20**B of the transparent substrate **20**. The first side surface SS**1** is opposed to the plurality of light emitting elements LD. The first side surface SS**1** and the fourth side surface SS**4** extend in the first direction X. The second side surface SS**2** and the third side surface SS**3** extend in the second direction Y. The first side surface SS**1** and the fourth side surface SS**4** are opposed to each other. The second side surface SS**2** and the third side surface SS**3** are opposed to each other. The second side surface SS**2** and the third side surface SS**3** intersect with the first side surface SS**1**. The transparent substrate **30** is bonded to the transparent substrate **20** with the transparent layer **40** interposed therebetween as described later. Incidentally, in the example shown in FIG. **3**, the first side surface SS**1** is located directly above the edge portion E**21** of the second substrate SUB**2**. However, the first side surface SS**1** may be located directly above the extended portion Ex, or may be located further outside the edge portion E**11**.

The transparent layer **40** is disposed on the main surface **30**A. The transparent layer **40** has a refractive index n**2** lower than a refractive index n**1** of the transparent substrate **30**. The transparent layer **40** includes a plurality of band portions **41** arranged spaced apart in the first direction X. Each of the band portions **41** extends along the second direction Y. The main surface **30**A is exposed between the band portions **41** adjacent to each other. In addition, the transparent layer **40** includes a frame portion **42** surrounding

the plurality of band portions **41**. Incidentally, a detailed shape of the transparent layer **40** will be described later.

The transparent substrate **30** is formed of, for example, an organic material such as glass, polymethyl methacrylate (PMMA), or polycarbonate (PC). The transparent layer **40** is formed of, for example, an organic material such as a siloxane-based resin or a fluorine-based resin. In addition, the refractive index n**1** of the transparent substrate **30** is about 1.5, and the refractive index n**2** of the transparent layer **40** is about from 1.0 to 1.4.

FIG. **4** is a plan view showing a configuration example of the light guide element LG shown in FIG. **3**.

As described above, the transparent layer **40** includes the plurality of band portions **41** and the frame portion **42** surrounding the plurality of band portions **41**.

Each band portion **41** includes a first end portion **411** on the light emitting element LD side, a second end portion **412** on the opposite side of the first end portion **411**, a first edge **413**, and a second edge **414**.

The first end portion **411** and the second end portion **412** are spaced apart from the frame portion **42**. The first end portion **411** and the second end portion **412** have a first width W**1** and a second width W**2**, respectively. Incidentally, the width in the present specification corresponds to a length along the first direction X. The second width W**2** of the second end portion **412** is smaller than the first width W**1** of the first end portion **411**. For example, the first width W**1** is smaller than a width WL of one light emitting element LD, and one light emitting element LD is disposed over the plurality of band portions **41** arranged in the first direction X. In addition, the first width W**1** shown in FIG. **4** is equal to or smaller than a width WP of one pixel electrode PE (alternatively, a pitch of the pixel electrodes PE arranged in the first direction X). Incidentally, in the example illustrated, the first end portion **411** and the second end portion **412** are spaced apart from the frame portion **42**, but at least one of the first end portion **411** and the second end portion **412** may be connected to the frame portion **42**.

The band portion **41** includes a plurality of first band portions **41**A, a plurality of second band portions **41**B located closer to the second side surface SS**2** side than the first band portion **41**A, a plurality of third band portions **41**C located closer to the third side surface SS**3** side than the first band portion **41**A, a plurality of fourth band portions **41**D located closer to the second side surface SS**2** side than the second band portion **41**B, and a plurality of fifth band portions **41**E located closer to the third side surface SS**3** side than the third band portion **41**C.

The second width W**2** of the second end portion **412** of the second band portion **41**B is smaller than the second width W**2** of the second end portion **412** of the first band portion **41**A. The second width W**2** of the second end portion **412** of the third band portion **41**C is smaller than the second width W**2** of the second end portion **412** of the first band portion **41**A. The second width W**2** of the second end portion **412** of the fourth band portion **41**D is smaller than the second width W**2** of the second end portion **412** of the second band portion **41**B. The second width W**2** of the second end portion **412** of the fifth band portion **41**E is smaller than the second width W**2** of the second end portion **412** of the third band portion **41**C. The first band portion **41**A, the second band portion **41**B, the third band portion **41**C, the fourth band portion **41**D, and the fifth band portion **41**E have the same first width W**1** of the first end portion **411**.

One first band portion **41**A is located at the center O of the width of the transparent substrate **30** in the first direction X. The second width W**2** of the second end portion **412** of the second band portion **41**B is equal to the second width W**2** of the second end portion **412** of the third band portion **41**C. The second width W**2** of the second end portion **412** of the fourth band portion **41**D is equal to the second width W**2** of the second end portion **412** of the fifth band portion **41**E. In addition, for example, the number of the second band portions **41**B and the number of the third band portions **41**C are equal to each other, and the number of the fourth band portions **41**D and the number of the fifth band portions **41**E are equal to each other. For example, the pattern of the band portion **41** is formed so as to have line symmetry with respect to the center O. In other words, the second band portion **41**B and the third band portion **41**C have the same shape, and the fourth band portion **41**D and the fifth band portion **41**E have the same shape. Incidentally, the number of each of the first band portions **41**A, the second band portions **41**B, the third band portions **41**C, the fourth band portions **41**D, and the fifth band portions **41**E is not limited, and may be one or two or more.

The first edge **413** and the second edge **414** are connected to the first end portion **411** and the second end portion **412**. The first edge **413** and the second edge **414** extend in a direction different from the first direction X and the second direction Y between the first end portion **411** and the second end portion **412**. In addition, the first edges **413** of the first band portion **41**A, the second band portion **41**B, and the fourth band portion **41**D extend in different directions from each other. The second edges **414** of the first band portion **41**A, the third band portion **41**C, and the fifth band portion **41**E extend in different directions from each other. Here, both the first edge **413** and the second edge **414** extend linearly, but may be formed in a curved shape. The first width W**1** and the second width W**2** correspond to an interval between the first edge **413** and the second edge **414**. The band portion **41** has a width that gradually decreases at a constant rate or at any rate from the first end portion **411** toward the second end portion **412**.

The pixel electrode PE overlaps two adjacent band portions **41** in planar view. The pixel electrode PE also overlaps a gap GP between the adjacent band portions **41**. As will be described later, a region overlapping the band portion **41** corresponds to a non-transmissive region where light from the light emitting element LD is hardly incident, and a region overlapping the gap GP corresponds to a transmissive region where light from the light emitting element LD can be incident.

The pixel electrode PE has a larger area overlapping the band portion **41** as it is located closer to the first side surface SS**1** side, and has a smaller area overlapping the band portion **41** as it is located closer to the fourth side surface SS**4** side. In other words, the pixel electrode PE has a smaller area overlapping the transmissive region as it is located closer to the first side surface SS**1** side, and a larger area overlapping the transmissive region as it is located closer to the fourth side surface SS**4** side.

In addition, the pixel electrode PE has a gradually decreasing area overlapping the band portion **41** as it is located closer to the second side surface SS**2** side than the center O, and a gradually decreasing area overlapping the band portion **41** as it is located closer to the third side surface SS**3** side than the center O. In other words, the pixel electrode PE has a gradually increasing area overlapping the transmissive region as it is located closer to the second side surface SS**2** side than the center O, and a gradually increasing area overlapping the transmissive region as it is located closer to the third side surface SS**3** side than the center O.

When the display panel PNL and the light guide element LG shown in FIG. **3** are overlapped, the plurality of band portions **41** is overlapped on the display portion DA in planar view, and the frame portion **42** is overlapped on the non-display portion NDA in planar view. The outer shape of the frame portion **42** is located inside the outer shape of the transparent substrate **30**. In addition, the inside of the frame portion **42** corresponds to the display portion DA.

FIG. **5** is a schematic cross-sectional view of the display device DSP shown in FIG. **3** along the second direction Y. Incidentally, only the main part of the display panel PNL is shown. In addition, the layers such as the switching element SW, the insulating films **11** and **12**, and the capacitive electrode **13** described above are generically called a constituent layer **50**.

The configuration example shown in FIG. **5** corresponds to an example in which the transparent substrate **30** of the light guide element LG is bonded to the transparent substrate **20** of the second substrate SUB**2** by a transparent adhesive layer AD. The transparent layer **40** including the band portion **41** is in contact with the main surface **30**A. The transparent adhesive layer AD is in contact with substantially the entire surface of the main surface **20**B, covers the transparent layer **40**, and is in contact with the main surface **30**A in a region where the transparent layer **40** is missing. The transparent layer **40** is located between the liquid crystal layer LC and the transparent substrate **30**.

The refractive index of each of the transparent substrates **10** and **20** and the transparent adhesive layer AD is the same as the refractive index n**1** of the transparent substrate **30** and higher than the refractive index n**2** of the transparent layer **40**. Incidentally, "same" here is not limited to a case where the refractive index difference is 0, and includes a case where the refractive index difference is 0.03 or less.

The transparent substrate **10** has a thickness T**1**, the transparent substrate **20** has a thickness T**2**, and the transparent substrate **30** has a thickness T**3**. Incidentally, the thickness in the present specification corresponds to a length along the third direction Z. In the example illustrated, the thickness T**1** is equal to the thickness T**2**, and the thickness T**3** is larger than the thicknesses T**1** and T**2**. Incidentally, the thickness T**3** may be equal to the thicknesses T**1** and T**2**. For example, the thickness T**3** is from 200 μm to 2000 μm. A thickness T**4** of the transparent layer **40** is desirably 250 nm or more and 800 nm or less, and more desirably 400 nm or more and 550 nm or less. A thickness T**5** of the transparent adhesive layer AD is from 4 μm to 4000 μm.

Next, emitted light from the light emitting element LD will be described.

The light emitting element LD emits light L**1** toward the first side surface SS**1**. Since an air layer exists between the light emitting element LD and the first side surface SS**1**, the light L**1** emitted from the light emitting element LD is refracted by the first side surface SS**1** and is incident on the transparent substrate **30**. Of the light L**1** incident on the transparent substrate **30**, light traveling from the transparent substrate **30** toward the transparent layer **40** is reflected at an interface between the transparent substrate **30** and the transparent layer **40**. In addition, of the light L**1** incident on the transparent substrate **30**, light traveling toward the main surface **30**B is reflected at an interface between the transparent substrate **30** and the air layer. As described above, the light L**1** travels inside the transparent substrate **30** while being repeatedly reflected in the vicinity of the first side surface SS**1** (alternatively, in a region where the transparent layer **40** exists).

Of the traveling light L**1**, light traveling toward a region where the transparent layer **40** does not exist, that is, a region where the transparent substrate **30** and the transparent adhesive layer AD are in contact with each other passes through the transparent substrate **30** and then passes through the transparent substrate **20** via the transparent adhesive layer AD. In other words, while the incidence of the light L**1** from the light emitting element LD on the display panel PNL is suppressed in the region close to the light emitting element LD, the incidence of the light L**1** on the display panel PNL is promoted in the region spaced apart from the light emitting element LD. Incidentally, in the region close to the light emitting element LD, the light L**1** is not incident on the display panel PNL at all, but as shown in FIG. **4**, the light L**1** is incident on the display panel PNL from the gap GP between the adjacent band portions **41**.

The light L**1** incident on the display panel PNL is transmitted through the pixels in a transparent state and scattered by the pixels in a scattered state. The display device DSP can be observed from the main surface **30**B side and can also be observed from the main surface **30**A side. In addition, the display device DSP is a so-called transparent display, and even when it is observed from the main surface **30**B side or the main surface **30**A side, the background of the display device DSP can be observed through the display device DSP.

Next, effects that can be obtained by the present embodiment will be described with reference to FIGS. **4** and **5**.

The light L**1** emitted from the light emitting element LD is absorbed and scattered by a member constituting the display device DSP, and the amount of light decreases as the light L**1** is spaced apart from the light emitting element LD. For this reason, the luminance of the display surface may decrease as the light L**1** is spaced apart from the light emitting element LD. In addition, since the amount of light reaching from the light emitting element LD decreases as it is closer to the second side surface SS**2** and the third side surface SS**3** of the display surface, a luminance difference may occur between the center and the left and right of the display surface. That is, light also reaches the center O from the left and right light emitting elements LD, but since the light emitting elements LD do not exist on the left side of the second side surface SS**2** and the right side of the third side surface SS**3**, the amount of light reaching the side surfaces is smaller than that at the center O. In particular, as the width of the light emitting element LD in the first direction X increases with an increase in size of the display panel PNL, a luminance difference in the first direction X is likely to occur.

According to the present embodiment, in the region where the transparent layer **40** exists, the light L**1** incident from the first side surface SS**1** is guided while being totally reflected inside the transparent substrate **30**, so that the incidence of the light L**1** on the display panel PNL is suppressed. In contrast, in the region where the transparent layer **40** does not exist, the incidence of the light L**1** on the display panel PNL is promoted. As shown in FIG. **4**, the pixel electrode PE has a larger area overlapping the band portion **41** as it is located closer to the first side surface SS**1** side, and has a smaller area overlapping the band portion **41** as it is located closer to the fourth side surface SS**4** side. In other words, in the display portion DA, an overlap area between each of the pixel electrodes PE arranged in the second direction Y and the transparent layer **40** is optimized in accordance with the decrease in the luminance of the light L**1** along the second direction Y. Therefore, in the second direction Y, the amount of illumination light per pixel electrode PE can be uniformized.

In addition, according to the present embodiment, the pixel electrode PE has a gradually decreasing area overlapping the band portion **41** as it is located closer to the second side surface SS**2** side than the center O, and a gradually decreasing area overlapping the band portion **41** as it is located closer to the third side surface SS**3** side than the center O. In other words, in the display portion DA, an overlap area between each of the pixel electrodes PE arranged in the first direction X and the transparent layer **40** is optimized in accordance with the decrease in the luminance of the light L**1** along the first direction X. Therefore, in the first direction X, the amount of illumination light per pixel electrode PE can be uniformized.

As described above, the in-plane luminance of the display portion DA along the first direction X and the second direction Y can be uniformized. As a result, degradation in display quality due to non-uniformity of the illumination light can be suppressed.

Incidentally, in the example shown in FIG. **5**, the main surface **30**B of the transparent substrate **30** is in contact with air, but another transparent layer having the same refractive index as the transparent layer **40** may be disposed on the entire surface of the main surface **30**B. Although the main surface **10**A of the transparent substrate **10** is in contact with air, another transparent substrate similar to the transparent substrate **30** may be bonded to the main surface **10**A.

FIG. **6** is a plan view showing another configuration example of the light guide element LG shown in FIG. **4**. The configuration example shown in FIG. **6** is different from the configuration example shown in FIG. **4** in that the fourth band portions **41**D and the fifth band portions **41**E are not formed.

That is, in the band portion **41** shown in FIG. **4**, the second width W**2** of the second end portion **412** varies in three steps from the center O to the second side surface SS**2**, whereas in the band portion **41** shown in FIG. **6**, the second width W**2** of the second end portion **412** varies in two steps from the center O to the second side surface SS**2**. Similarly, in the band portion **41** shown in FIG. **4**, the second width W**2** of the second end portion **412** varies in three steps from the center O to the third side surface SS**3**, whereas in the band portion **41** shown in FIG. **6**, the second width W**2** of the second end portion **412** varies in two steps from the center O to the third side surface SS**3**.

Also in this configuration example, the same effects as those described above can be obtained.

FIG. **7** is a plan view showing another configuration example of the light guide element LG shown in FIG. **4**. The configuration example shown in FIG. **7** is different from the configuration example illustrated in FIG. **4** in terms of the second width W**2** of the second end portion **412**.

As the plurality of band portions **41** is located closer to the second side surface SS**2** side than the center O, the second width W**2** of the second end portion **412** decreases, and as the plurality of band portions **41** is located closer to the third side surface SS**3** side than the center O, the second width W**2** of the second end portion **412** decreases.

Also in this configuration example, the same effects as those described above can be obtained.

FIG. **8** is a plan view showing another configuration example of the light guide element LG shown in FIG. **4**. The configuration example shown in FIG. **8** is different from the configuration example shown in FIG. **4** in that the width of the band portion **41** is reduced at an intermediate portion **415** between the first end portion **411** and the second end portion **412**.

The first width W**1** of the first end portion **411** is larger than a width W**415** of the intermediate portion **415**, and the second width W**2** of the second end portion **412** is larger than the width W**415** of the intermediate portion **415**. The width of the band portion **41** decreases from the first end portion **411** to the intermediate portion **415**. In addition, the width of the band portion **41** decreases from the second end portion **412** to the intermediate portion **415**. For example, for one band portion **41**, the first width W**1** and the second width W**2** are equal to each other.

The width W**415** of the intermediate portion **415** of the second band portion **41**B is smaller than the width W**415** of the intermediate portion **415** of the first band portion **41**A. The width W**415** of the intermediate portion **415** of the third band portion **41**C is smaller than the width W**415** of the intermediate portion **415** of the first band portion **41**A. The width W**415** of the intermediate portion **415** of the fourth band portion **41**D is smaller than the width W**415** of the intermediate portion **415** of the second band portion **41**B. The width W**415** of the intermediate portion **415** of the fifth band portion **41**E is smaller than the width W**415** of the intermediate portion **415** of the third band portion **41**C. For example, the first band portion **41**A, the second band portion **41**B, the third band portion **41**C, the fourth band portion **41**D, and the fifth band portion **41**E have the same first width W**1** of the first end portion **411**. For example, the first band portion **41**A, the second band portion **41**B, the third band portion **41**C, the fourth band portion **41**D, and the fifth band portion **41**E have the same second width W**2** of the second end portion **412**.

One first band portion **41**A is located at the center O. The width W**415** of the intermediate portion **415** of the second band portion **41**B is equal to the width W**415** of the intermediate portion **415** of the third band portion **41**C. The width W**415** of the intermediate portion **415** of the fourth band portion **41**D is equal to the width W**415** of the intermediate portion **415** of the fifth band portion **41**E. In addition, for example, the number of the second band portions **41**B and the number of the third band portions **41**C are equal to each other, and the number of the fourth band portions **41**D and the number of the fifth band portions **41**E are equal to each other. For example, the pattern of the band portion **41** is formed so as to have line symmetry with respect to the center O. In other words, the second band portion **41**B and the third band portion **41**C have the same shape, and the fourth band portion **41**D and the fifth band portion **41**E have the same shape.

The light emitting element LD is also disposed at a position opposed to the fourth side surface SS**4**. By reducing the width of the band portion **41** at the intermediate portion **415**, more light can reach the center of the display panel when light is incident from both side surfaces of the light guide element LG. Therefore, the in-plane luminance of the display portion DA along the second direction Y can be uniformized. In addition, the band portion **41** has a gradually decreasing area per unit region as it is located closer to the second side surface SS**2** side than the center O, and a gradually decreasing area per unit region as it is located closer to the third side surface SS**3** side than the center O. Therefore, as shown in FIG. **4**, the in-plane luminance of the display portion DA along the first direction X can be uniformized.

Also in this configuration example, the same effects as those described above can be obtained.

FIG. **9** is an exploded perspective view showing another configuration example of the display device DSP shown in FIG. **3**. The configuration example shown in FIG. **9** is

different from the configuration example shown in FIG. **3** in that the light guide element LG is located below the display panel PNL.

The light guide element LG, the first substrate SUB**1**, and the second substrate SUB**2** are arranged in this order along the third direction Z.

The main surface **30**B of the transparent substrate **30** is opposed to the main surface **10**A of the transparent substrate **10**. The transparent substrate **30** is bonded to the transparent substrate **10** with the transparent layer **40** interposed therebetween as described later. In the example shown in FIG. **9**, the first side surface SS**1** is located directly under the edge portion E**11** of the first substrate SUB**1**. However, the first side surface SS**1** may be located directly under the extended portion Ex, or may be located further outside the edge portion E**11**.

The transparent layer **40** is disposed on the main surface **30**B. As in FIG. **3**, the transparent layer **40** includes the plurality of band portions **41** arranged spaced apart in the first direction X. Each of the band portions **41** extends along the second direction Y. The main surface **30**B is exposed between the adjacent band portions **41**. In addition, the transparent layer **40** includes a frame portion **42** surrounding the plurality of band portions **41**.

Incidentally, in the example shown in FIG. **9**, the main surface **30**A of the transparent substrate **30** is in contact with air, but another transparent layer having the same refractive index as the transparent layer **40** may be disposed on the entire surface of the main surface **30**A. In addition, although the main surface **20**B of the transparent substrate **20** is in contact with air, another transparent substrate similar to the transparent substrate **30** may be bonded to the main surface **20**B.

FIG. **10** is a schematic cross-sectional view of the display device DSP shown in FIG. **9** along the second direction Y. Incidentally, only the main part of the display panel PNL is shown.

The configuration example shown in FIG. **10** corresponds to an example in which the transparent substrate **30** of the light guide element LG is bonded to the transparent substrate **10** of the first substrate SUB**1** by a transparent adhesive layer AD. The transparent layer **40** including the band portion **41** is in contact with the main surface **30**B. The transparent adhesive layer AD is in contact with substantially the entire surface of the main surface **10**A, covers the transparent layer **40**, and is in contact with the main surface **30**B in the region where the transparent layer **40** is missing. The configuration of the display panel PNL is as described above.

Also in this configuration example, the same effects as those described above can be obtained.

As described above, according to the present embodiment, it is possible to provide a display device capable of suppressing degradation in display quality.

While certain embodiments have been described, these embodiments have been presented by way of example only, and are not intended to limit the scope of the inventions. Indeed, the novel embodiments described herein may be embodied in a variety of other forms; furthermore, various omissions, substitutions and changes in the form of the embodiments described herein may be made without departing from the spirit of the inventions. The accompanying claims and their equivalents are intended to cover such forms or modifications as would fall within the scope and spirit of the inventions.

What is claimed is:

1. A display device comprising:

a substrate including a main surface, a first side surface, a second side surface intersecting the first side surface, and a third side surface intersecting the first side surface and located on an opposite side of the second side surface;

light emitting elements opposing the first side surface;

a transparent layer being in contact with the main surface, and having a refractive index lower than a refractive index of the substrate; and

a liquid crystal layer opposing the substrate, wherein

the transparent layer is located between the main surface and the liquid crystal layer and has band portions arranged along the first side surface and a frame portion surrounding the band portions,

each of the band portions has a first end facing the first side surface and a second end opposite to the first end,

the band portions include a first band portion, and a second band portion located between the first band portion and the second side surface,

the second end of the first band portion has a first width,

the second end of the second band portion has a second width, and

the first width is different from the second width.

2. The display device according to claim **1**, wherein

the liquid crystal layer includes a polymer dispersed liquid crystal.

3. The display device according to claim **1**, wherein

an image displayed by the display device can be observed in both a side of the main surface and an opposite side of the main surface.

4. The display device according to claim **1**, wherein

the first width is wider than the second width.

5. The display device according to claim **4**, wherein

the second band portion is closer to the second side surface than to the third side surface.

6. The display device according to claim **1**, wherein

a background of the display device can be observed through the display device.

7. The display device according to claim **1**, wherein

the transparent layer is made of a siloxane-based resin or a fluorine-based resin.

8. The display device according to claim **1**, further comprising:

a first substrate including pixel electrodes; and

a second substrate, wherein

the liquid crystal layer is held between the first substrate and the second substrate, and

the substrate is on one of the first substrate and the second substrate.

9. The display device according to claim **1**, wherein

the first end is wider than the second end.

10. The display device according to claim **1**, wherein

the first band portion is opposed to a center of the first side surface.

11. The display device according to claim **1**, wherein

the first band portion is located between the second side surface and a center of the main surface.

12. The display device according to claim **1**, wherein

the band portions overlap a display portion displaying an image, and

the frame portion overlaps a non-display portion surrounding the display portion.

13. The display device according to claim **1**, wherein the band portions are separated from the frame portion.

14. The display device according to claim **1**, wherein the second end is in contact with the frame portion.

15. The display device according to claim **1**, wherein at least one of the first end and the second end is in contact with the frame portion.

16. The display device according to claim **1**, further comprising:

a third band portion, wherein

the second end of the third band portion has a third width,

the first band portion is located between the second band portion and the third band portion, and

the first width is wider than the third width.

17. The display device according to claim **1**, further comprising:

a fourth band portion, wherein

the second end of the fourth band portion has a fourth width,

the second band portion is located between the first band portion and the fourth band portion, and

the second width is wider than the fourth width.

18. A display device comprising:

a substrate including a main surface, a first side surface, a second side surface intersecting the first side surface, and a third side surface intersecting the first side surface and located on an opposite side of the second side surface;

light emitting elements opposing the first side surface;

a transparent layer being in contact with the main surface, and having a refractive index lower than a refractive index of the substrate, and

a liquid crystal layer opposing the substrate; wherein

the transparent layer is located between the main surface and the liquid crystal layer and has band portions arranged along the first side surface and a frame portion surrounding the band portions,

each of the band portions has a first end facing the first side surface and a second end opposite to the first end,

the second end is in contact with the frame portion, and

a width of the first end is wider than a width of the second end.

19. The display device according to claim **18**, wherein

the band portions include a first band portion, and a second band portion located between the first band portion and the second side surface,

the second band portion is closer to the second side surface than to the third side surface,

the second end of the first band portion has a first width,

the second end of the second band portion has a second width, and

the first width is wider than the second width.

20. The display device according to claim **18**, further comprising:

pixel electrodes overlapping the transparent layer in a plan view.

* * * * *