US012404675B2

(12) **United States Patent**
Taniguchi

(10) **Patent No.: US 12,404,675 B2**
(45) **Date of Patent: Sep. 2, 2025**

(54) **SUSPENDER**

(71) Applicant: **Murata Machinery, Ltd.**, Kyoto (JP)

(72) Inventor: **Hiroto Taniguchi**, Inuyama (JP)

(73) Assignee: **Murata Machinery, Ltd.**, Kyoto (JP)

(*) Notice: Subject to any disclaimer, the term of this patent is extended or adjusted under 35 U.S.C. 154(b) by 0 days.

(21) Appl. No.: **18/033,518**

(22) PCT Filed: **Sep. 14, 2021**

(86) PCT No.: **PCT/JP2021/033703**
§ 371 (c)(1),
(2) Date: **Apr. 24, 2023**

(87) PCT Pub. No.: **WO2022/091612**
PCT Pub. Date: **May 5, 2022**

(65) **Prior Publication Data**

US 2023/0392374 A1 Dec. 7, 2023

(30) **Foreign Application Priority Data**

Oct. 26, 2020 (JP) 2020-179085

(51) **Int. Cl.**
E04B 9/00 (2006.01)
B65G 1/04 (2006.01)
(Continued)

(52) **U.S. Cl.**
CPC ***E04B 9/006*** (2013.01); ***B65G 1/04*** (2013.01); ***F16M 11/043*** (2013.01); ***F16M 11/2085*** (2013.01); ***F16M 13/027*** (2013.01)

(58) **Field of Classification Search**
CPC .. E04B 9/006; F16M 11/2085; F16M 13/027; B65G 1/04
See application file for complete search history.

(56) **References Cited**

U.S. PATENT DOCUMENTS

2,650,056 A * 8/1953 Masoner E04B 9/006 248/323
2,963,251 A * 12/1960 Fuss F21V 21/00 248/228.6

(Continued)

FOREIGN PATENT DOCUMENTS

CN 2430407 Y * 5/2001 ..... B65H 3/54
CN 104326369 A 2/2015

(Continued)

OTHER PUBLICATIONS

Extended Search Report dated Oct. 2, 2024, from counterpart European Application No. 21 88 5731.6.

(Continued)

Primary Examiner — Brent W Herring
(74) *Attorney, Agent, or Firm* — DLA Piper LLP (US)

(57) **ABSTRACT**

A suspender suspends an object via a grid-shaped groove provided in a ceiling included in a building. The suspender includes a fixed portion fixed to multiple places in the groove. The suspender includes a body portion that is connected to the fixed portion and that suspends the object. A first guide portion extending in a first direction for connecting the fixed portion and the body portion is provided at the fixed portion or the body portion, and a connecting position of the body portion can be changed. A second guide portion that is used for suspending the object and that extends in a second direction is provided. The suspender can change a suspending position of the object.

9 Claims, 12 Drawing Sheets

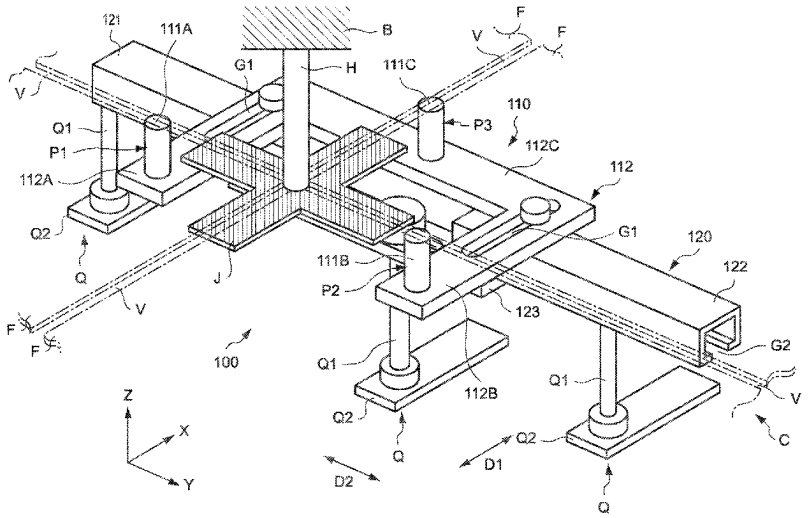

(51) **Int. Cl.**

F16M 11/04	(2006.01)
F16M 11/20	(2006.01)
F16M 13/02	(2006.01)

(56) **References Cited**

U.S. PATENT DOCUMENTS

3,181,274	A *	5/1965	Izenour	A47F 5/0892 52/39
3,459,399	A *	8/1969	Everson	E04B 9/006 52/39
4,109,305	A *	8/1978	Claussen	F21S 8/063 362/225
7,250,922	B2 *	7/2007	Sakaniwa	A61B 6/463 600/407
7,712,239	B2 *	5/2010	Pitcher	G09F 7/18 52/39
2008/0128376	A1 *	6/2008	Taniguchi	B65G 1/0435 212/322
2016/0363263	A1 *	12/2016	Stockham	G09F 7/205
2017/0101779	A1 *	4/2017	Schreiber	F16M 13/027

FOREIGN PATENT DOCUMENTS

JP	H09-279750	A	10/1997
JP	2007-126924	A	5/2007
JP	2020-056464	A	4/2020
WO	2020/153040	A1	7/2020

OTHER PUBLICATIONS

International Search Report dated Nov. 22, 2021 in counterpart International Application No. PCT/JP2021/033703 w/English translation.

Written Opinion dated Nov. 22, 2021 in counterpart International Application No. PCT/JP2021/033703.

* cited by examiner

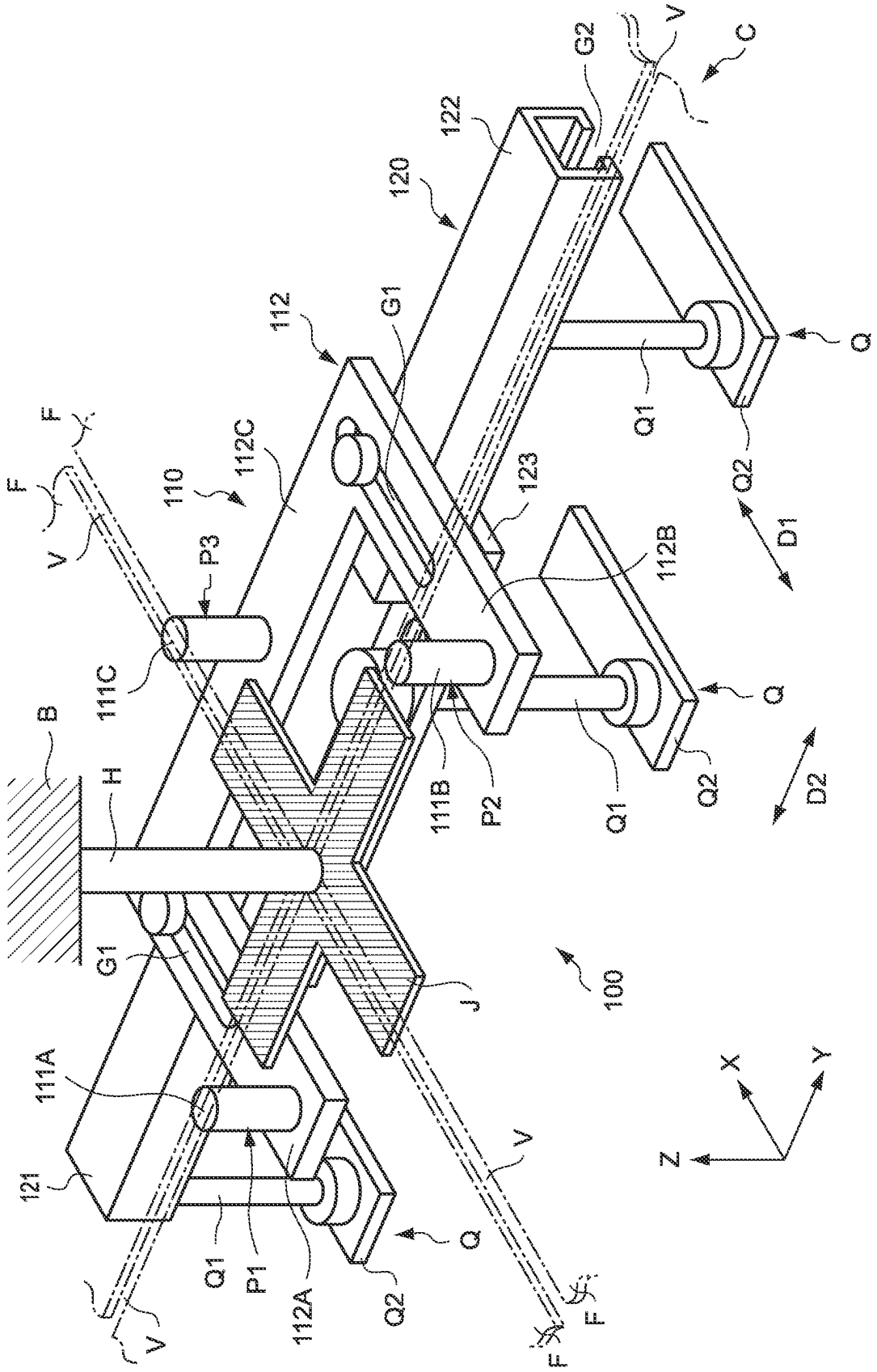

B
H
G1
111A
121
Q1
P1
112A
Q2
Q
V
F
F
F
V
V
110
112C
P3
111C
112
G1
120
122
G2
V
C
123
112B
111B
P2
Q1
Q2
Q
D1
D2
J
100
X
Y
Z

FIG.1

FIG.2

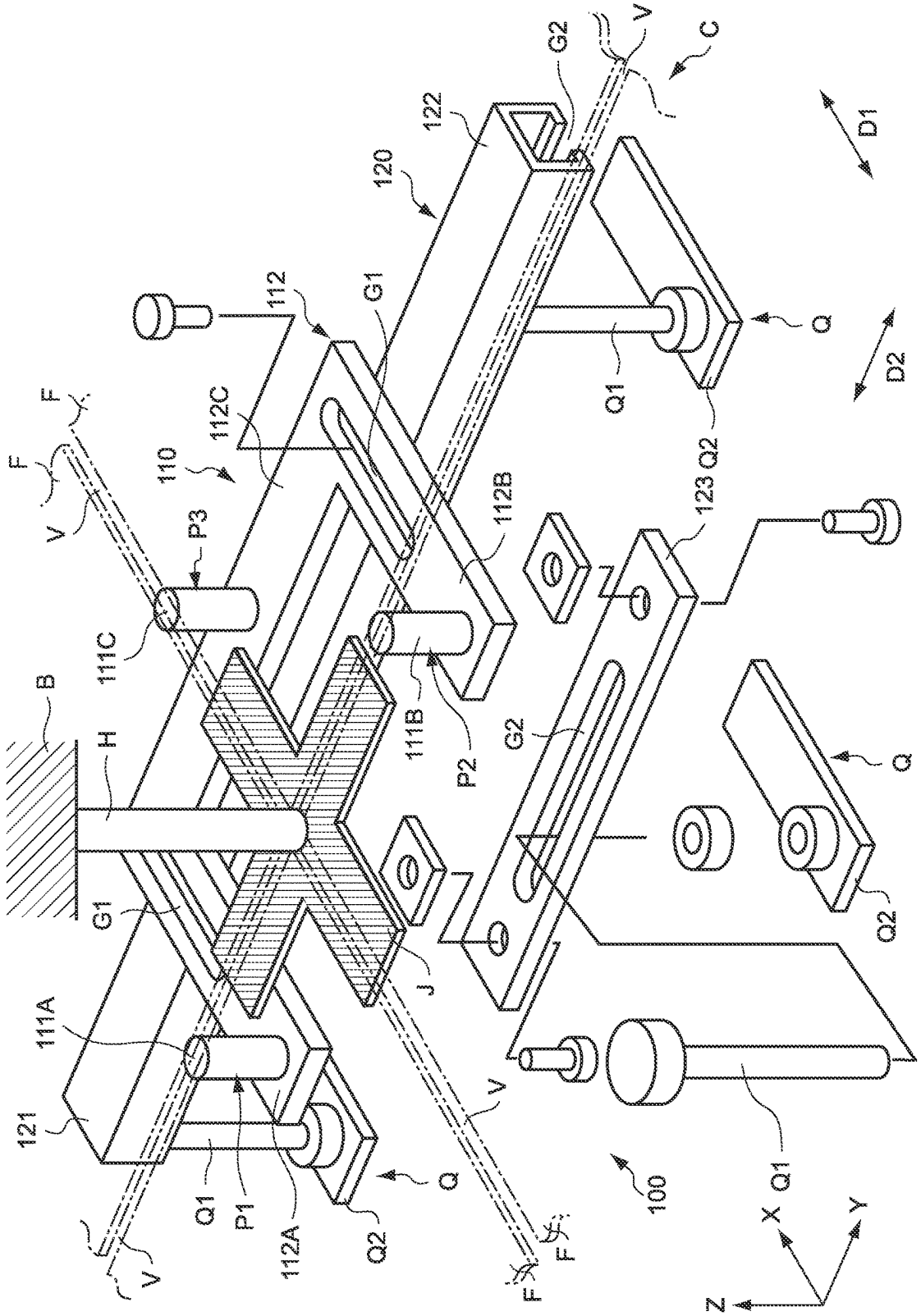

B
H
G1
111A
121
Q1
P1
112A
Q2
Q
V
F
F
V
110
112C
112
G1
120
122
G2
V
C
D1
D2
Q
Q1
Q2
123
112B
P3
111C
111B
P2
G2
Q
Q2
J
V
F
F
100
Q1
X
Y
Z

FIG.3

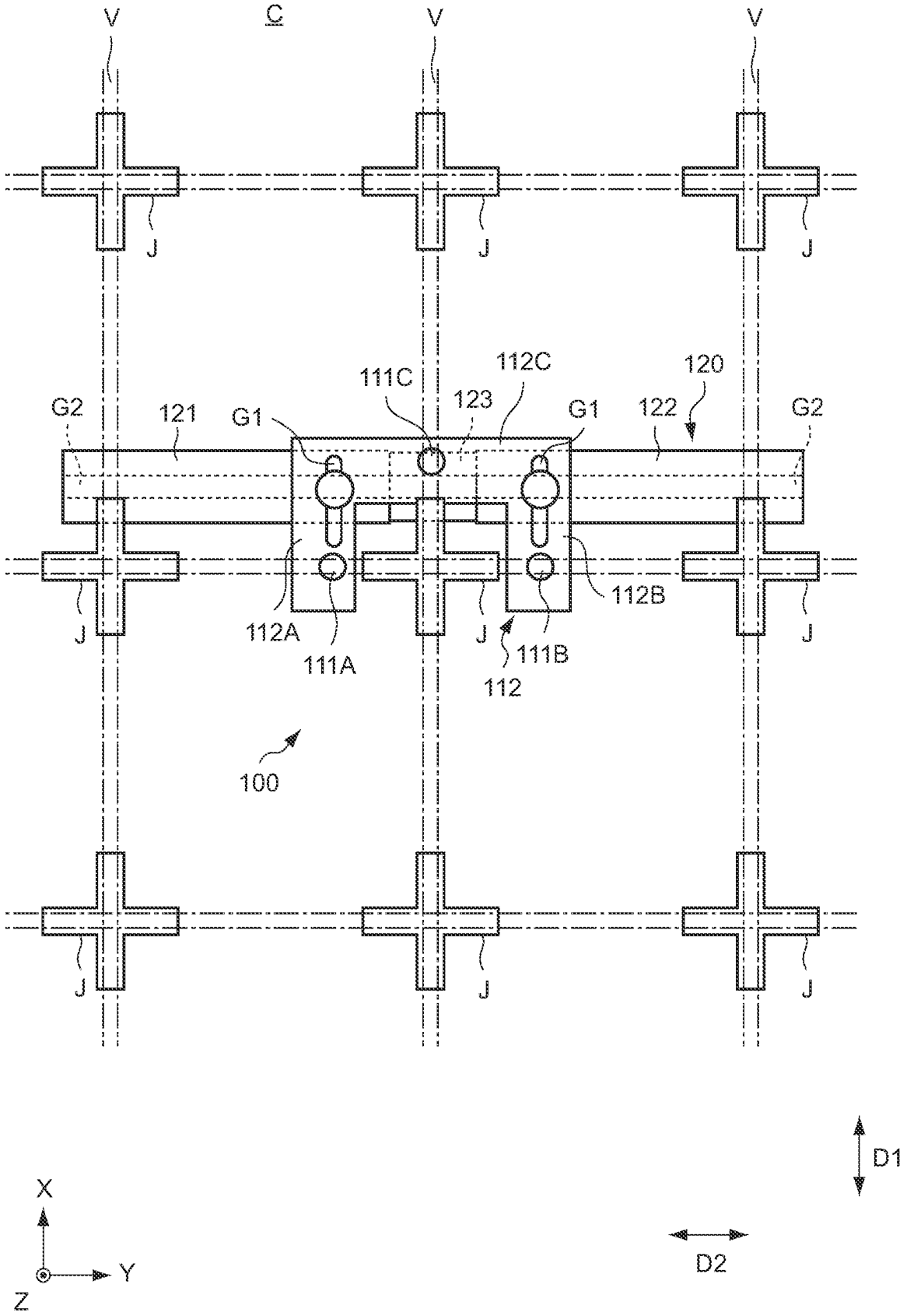
V
C
V
V
J
J
J
111C
112C
120
G2
121
G1
123
G1
122
G2
112B
J
112A
J
111B
J
111A
112
100
J
J
J
D1
X
Y
Z
D2

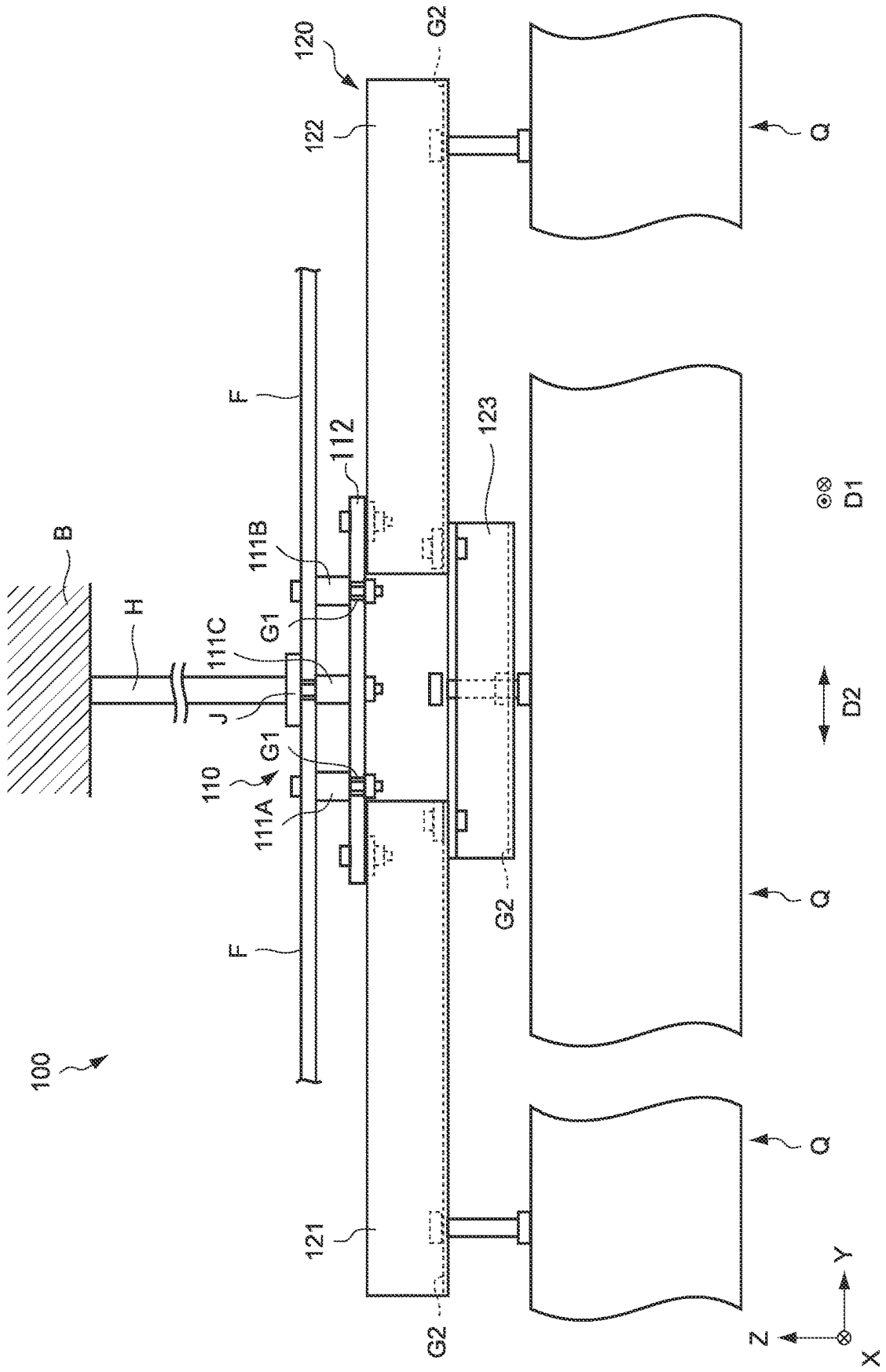
120
G2
122
Q
F
112
123
B
111B
H
G1
111C
J
D1
D2
G1
110
111A
G2
Q
F
100
Q
121
G2
Y
Z
X

FIG.4

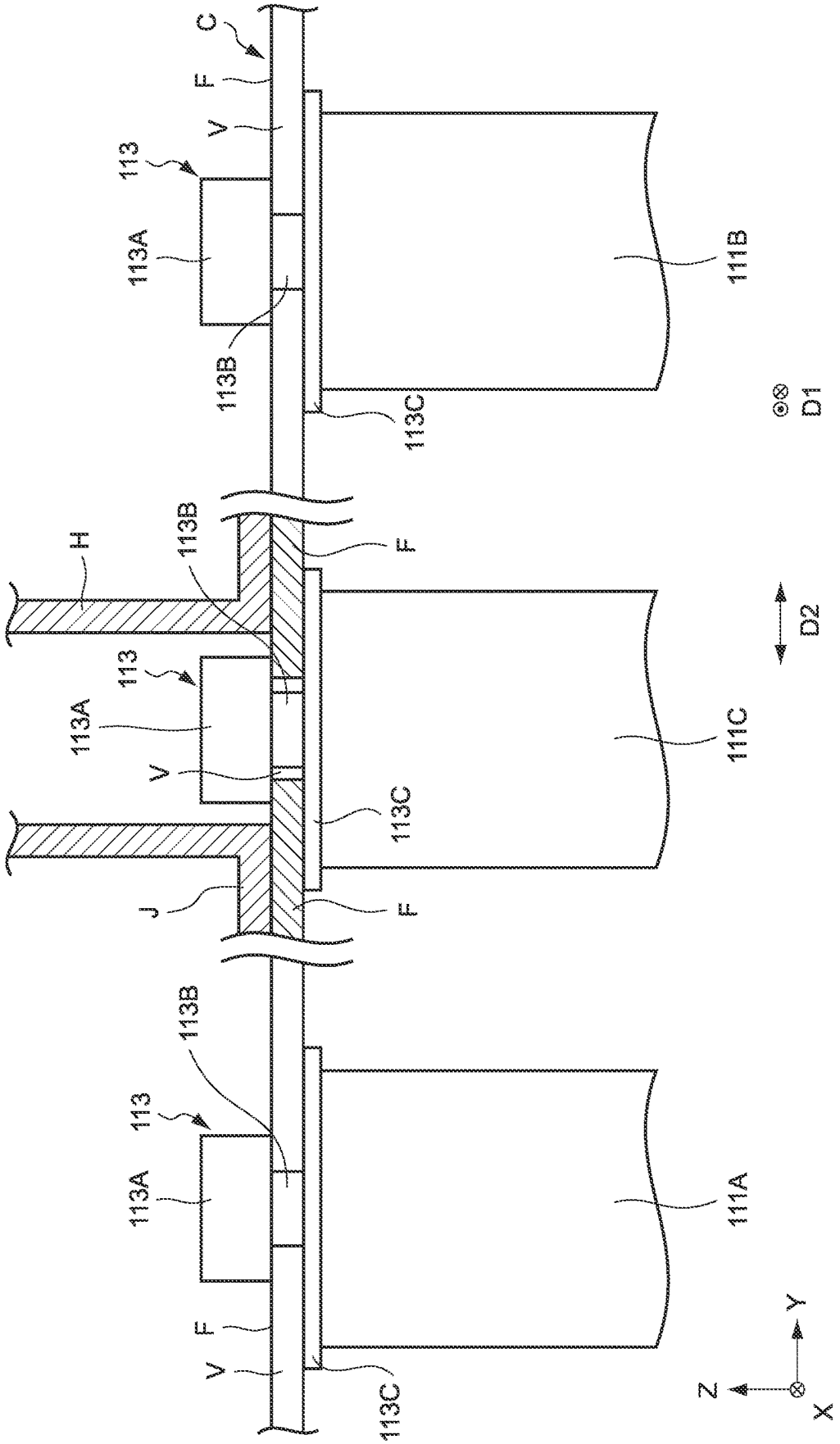
C
F
V
113
113A
113B
113C
111B
D1
H
113B
F
D2
113
113A
V
111C
113C
J
F
113B
113
113A
111A
F
V
113C
Z
Y
X

FIG.5

FIG.6

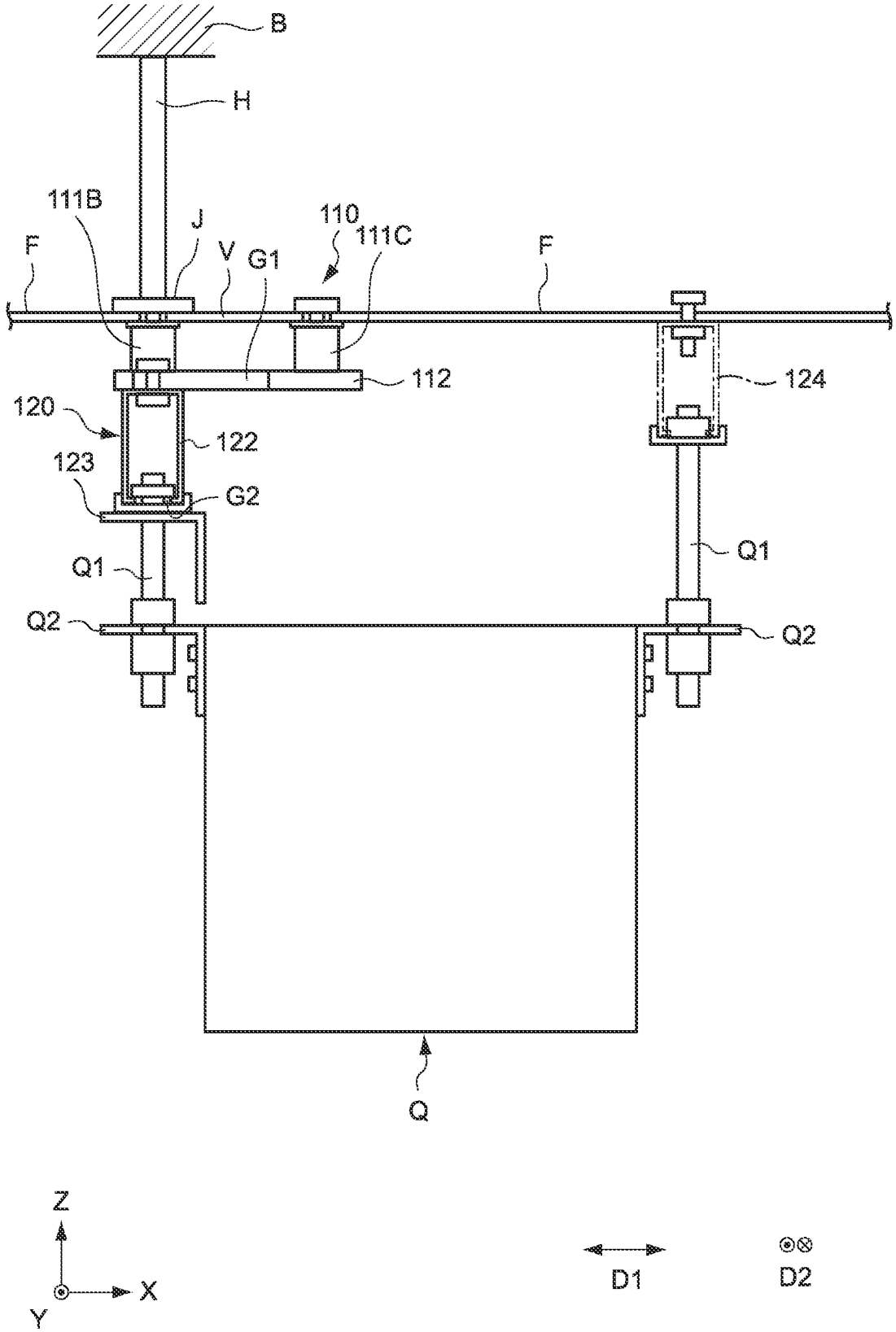
B
H
111B
J
110
111C
F
V
G1
F
112
124
120
122
123
G2
Q1
Q1
Q2
Q2
Q
Z
X
Y
D1
D2

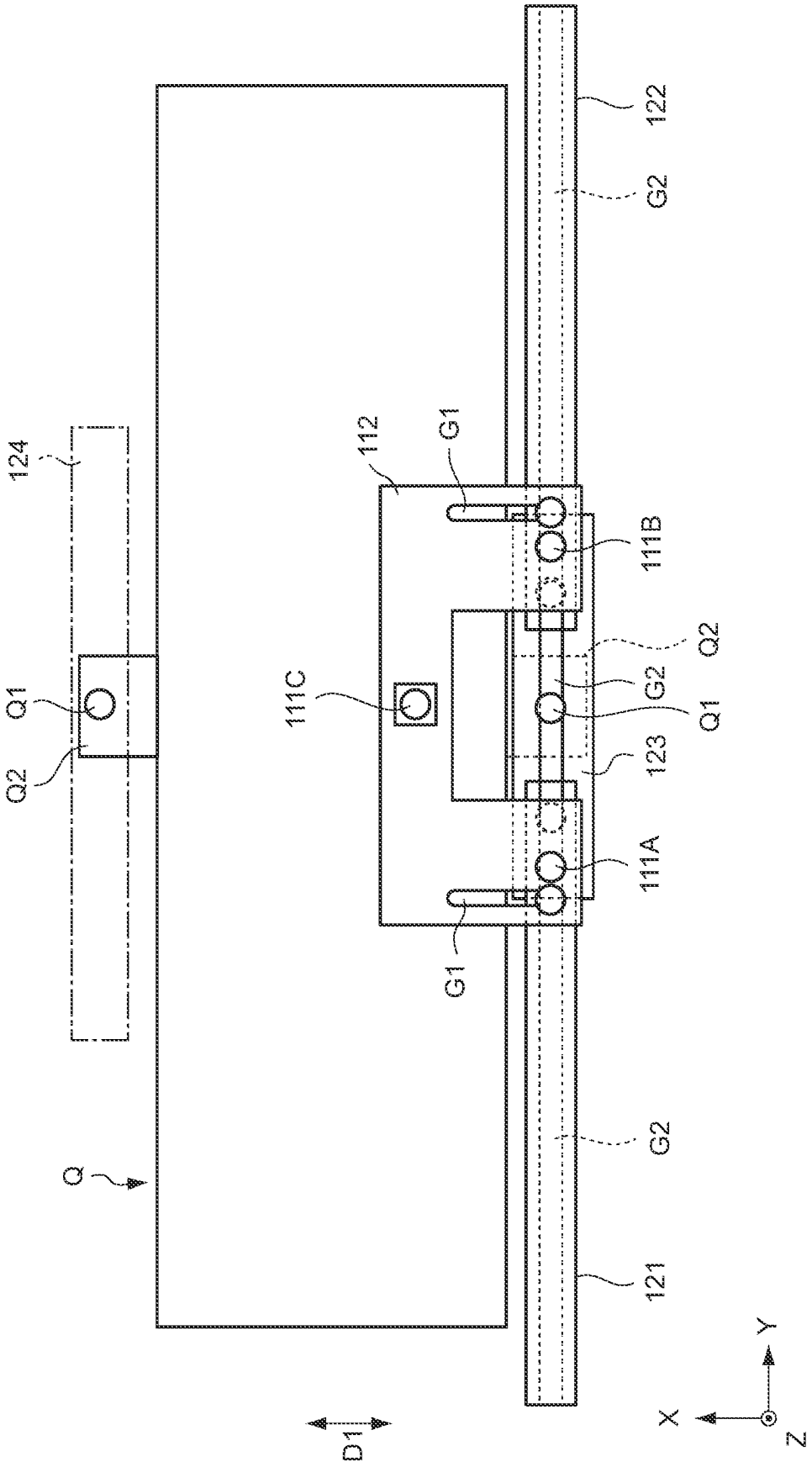

FIG.7

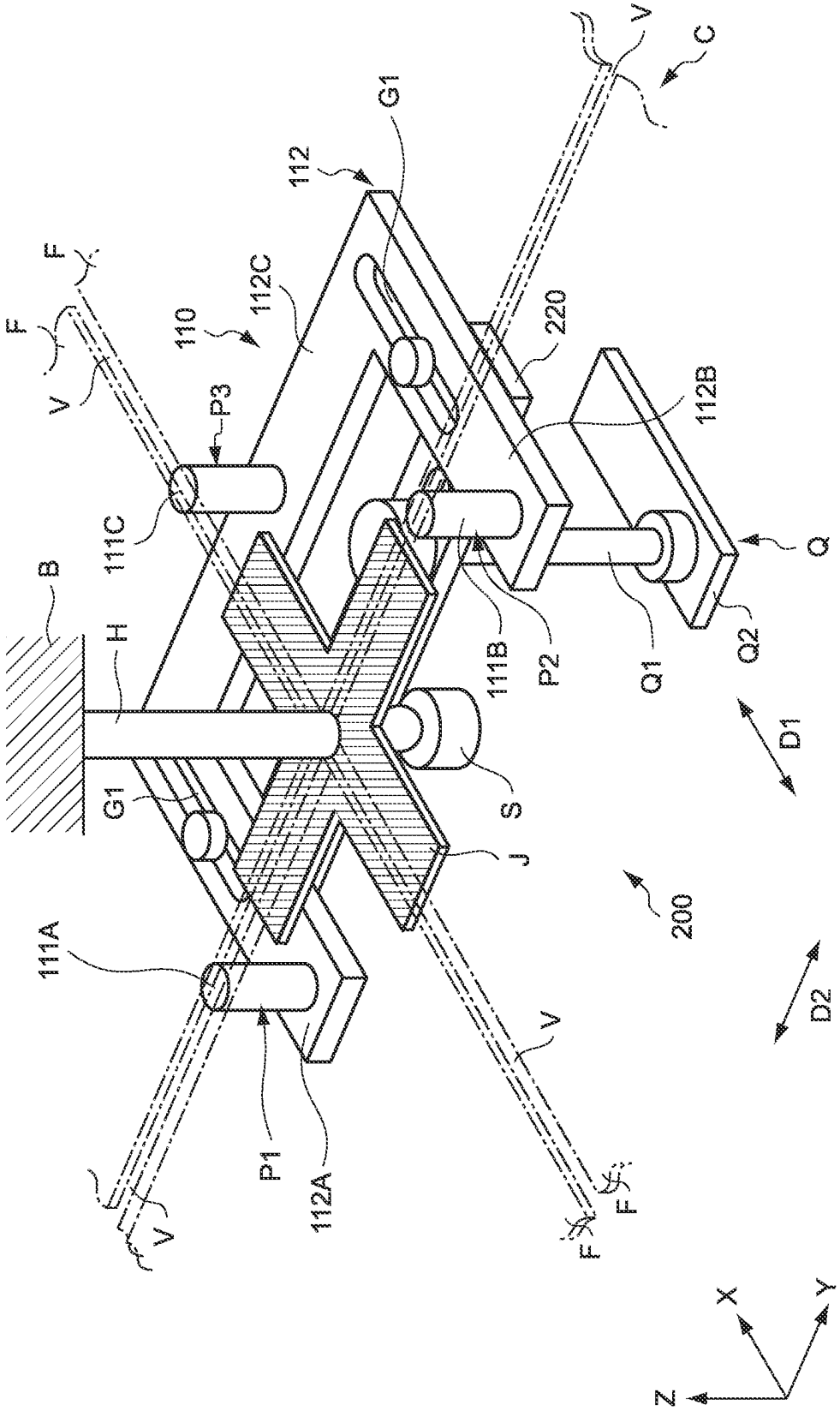
V
C
G1
112
F
F
V
110
112C
220
P3
112B
111C
Q
B
H
111B
P2
Q1
Q2
D1
G1
S
J
200
111A
D2
V
P1
112A
V
F
F
X
Y
Z

FIG.8

FIG.9

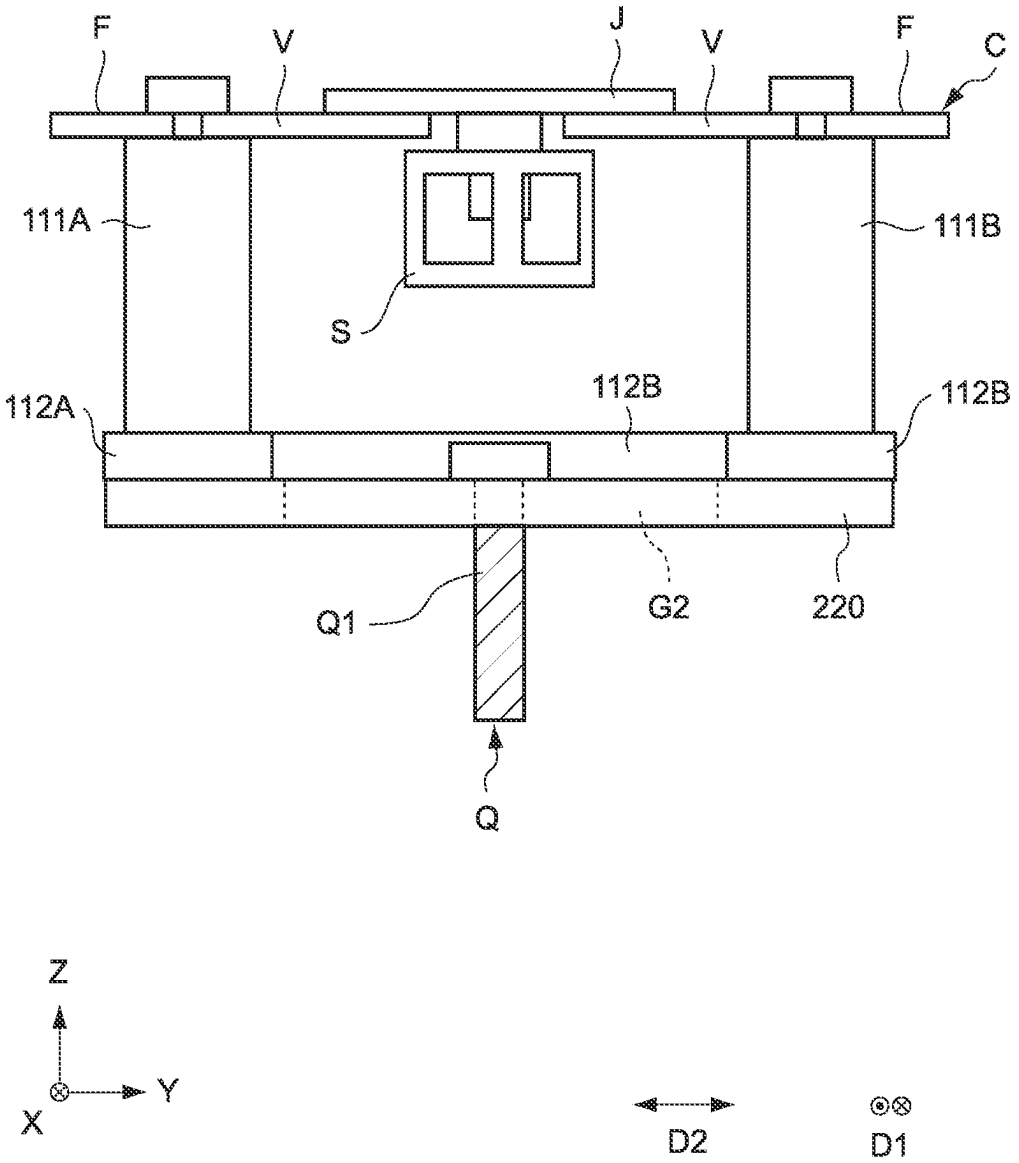

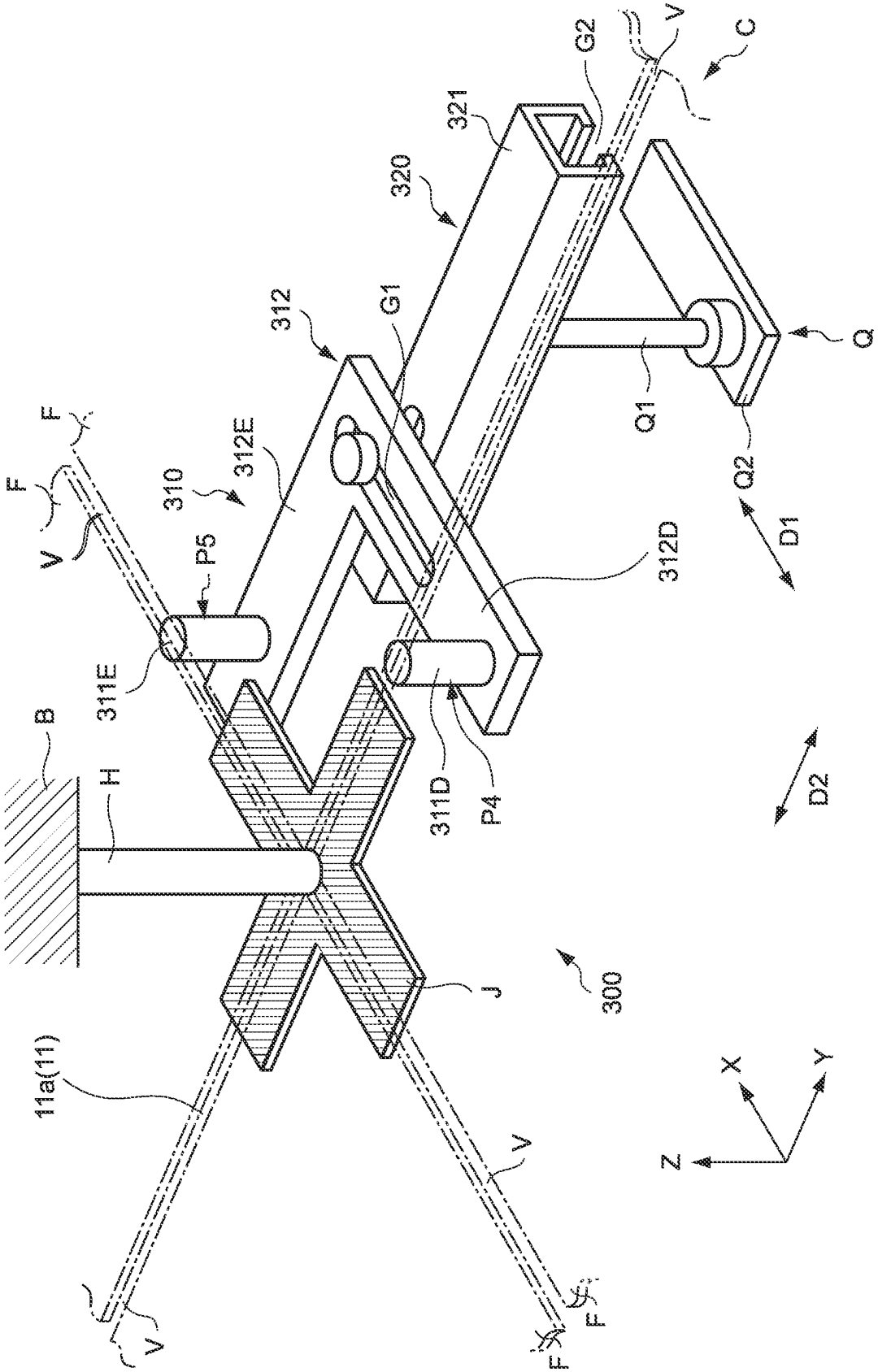

C
V
G2
321
320
312
G1
Q
Q1
Q2
D1
312E
310
F
F
V
P5
311E
312D
B
H
311D
P4
D2
J
300
11a(11)
V
X
Y
Z
V
F
F

FIG.10

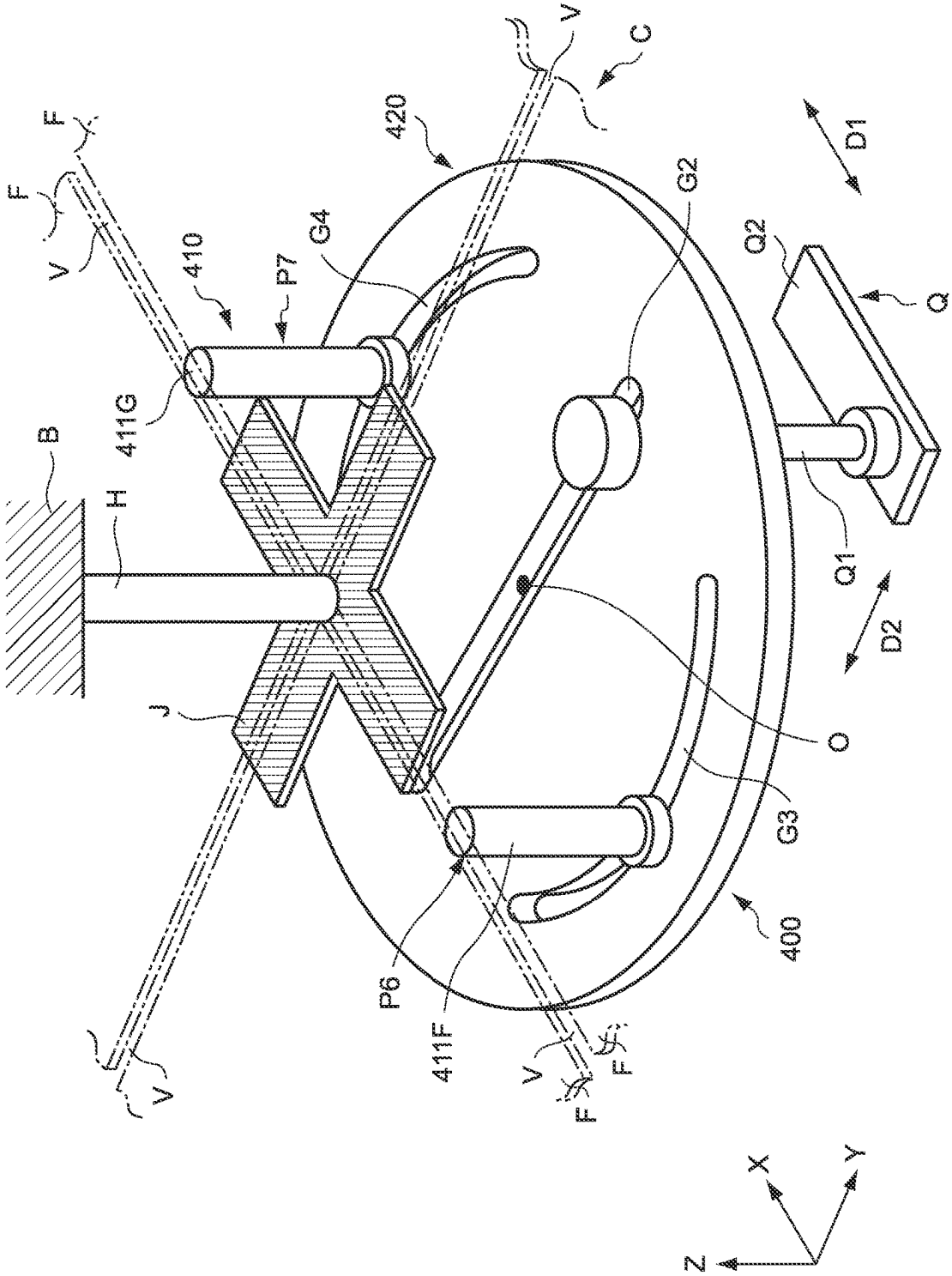

FIG.11

FIG.12

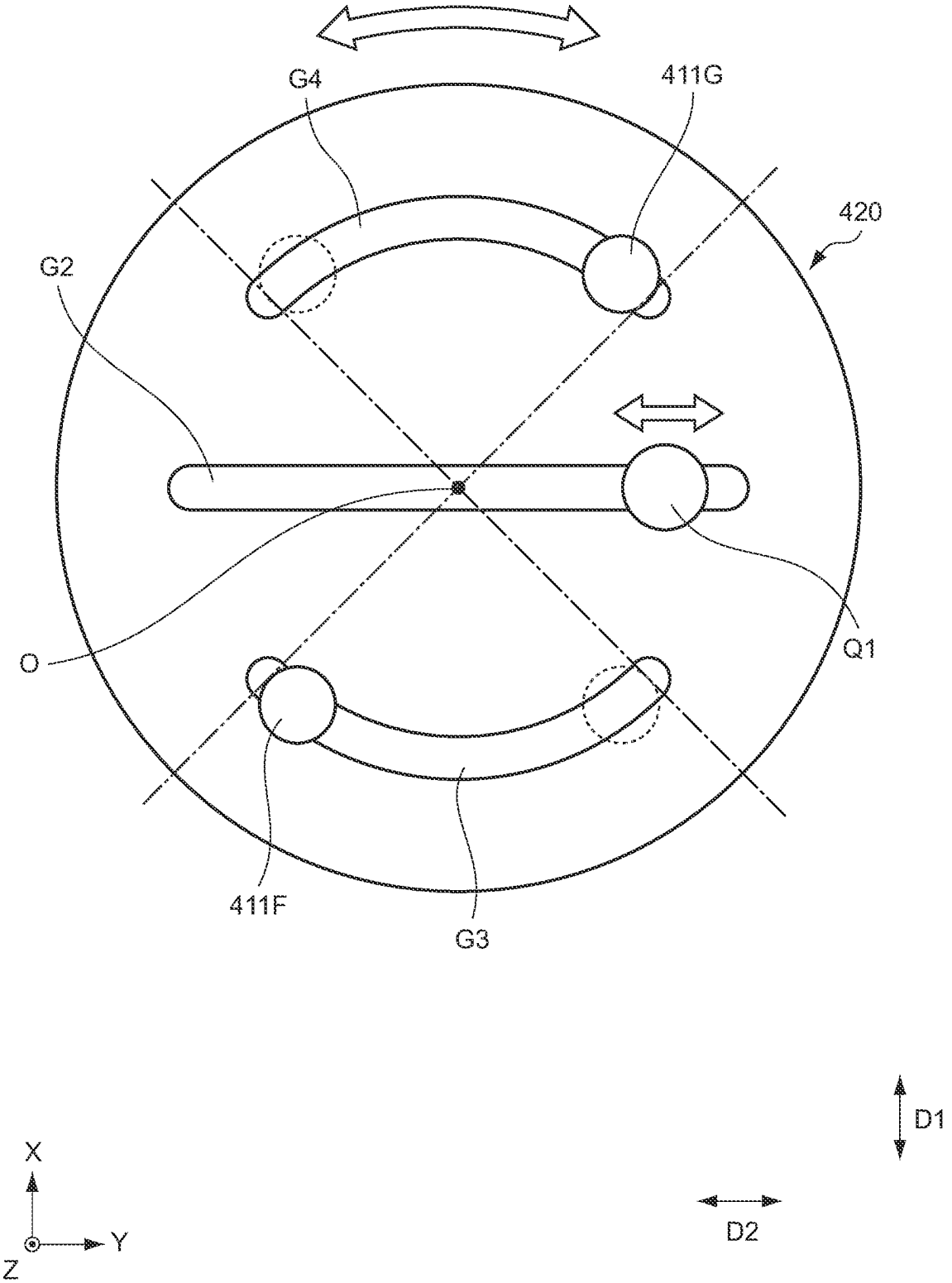

SUSPENDER

TECHNICAL FIELD

This disclosure relates to a suspender.

BACKGROUND

A ceiling suspended from a building is known (for example, see Japanese Unexamined Patent Application Publication No. 2007-126924). In such a ceiling, for example, a plurality of rectangular-shaped frame members are arranged in a matrix and a grid-shaped groove is formed between the plurality of frame members. A suspender is attached via this groove and an object to be suspended is held via this suspender.

In the ceiling, a plurality of frames are coupled by a coupling member at an intersection point of grooves and this coupling member is suspended from a building, thus any grooves may not be formed at this intersection point area. Further, equipment such as a sprinkler may have already been suspended from a part of the grooves of the frames. Thus, a suspender cannot be attached to an area around an intersection point of grooves and around the equipment and therefore there exists a problem that an object to be suspended cannot be easily suspended, for example, a special suspender is required.

It could therefore be helpful to provide a suspender capable of increasing degrees of freedom of a suspending position of an object to be suspended which is suspended from a ceiling.

SUMMARY

We thus provide a suspender that suspends an object to be suspended via a grid-shaped groove provided at a ceiling included in a building and includes a fixed portion fixed to multiple places in the groove and a body portion connected to the fixed portion and configured to suspend the object to be suspended. A first guide portion configured to connect the fixed portion and the body portion to each other and extending in a first direction is provided at the fixed portion or the body portion. A connecting position of the body portion with respect to the fixed portion can be changed within a range of a length of the first guide portion. A second guide portion configured to suspend the object to be suspended and extending in a second direction different from the first direction is provided at the body portion. A suspending position of the object to be suspended with respect to the body portion can be changed within a range of a length of the second guide portion.

The suspender can change a position of the object to be suspended in the first direction and the second direction within a range of a length of the first guide portion and within a range of a length of the second guide portion and can increase degree of freedom of position to suspend the object to be suspended.

The first direction may be parallel to a groove of said grid-shaped groove, which extends in a predetermined direction out of the grid-shaped groove and the second direction may be parallel to a groove of the grid-shaped groove, which extends in a direction intersecting with the predetermined direction out of the grid-shaped groove. The suspender can change a position of the object to be suspended with respect to the fixed portion in a direction in which the grid-shaped groove extends.

The fixed portion may include a plurality of suspending portions fixed to the groove and a plate-shaped body attached to lower ends of the plurality of suspending portions and expanding horizontally. In the suspender, the suspending portion and plate-shaped body can have an appropriate shape according to the intended use such as suspending load. Therefore the suspender can suspend stably an object to be suspended.

The plurality of suspending portions may include a first suspending portion fixed to a first position in the groove, a second suspending portion fixed to a second position in the groove, the second position different from the first position, and a third suspending portion fixed to a third position in the groove, the third position different from the first position and the second position. The plate-shaped body may include a first portion fixed to a lower portion of the first suspending portion and extending in the first direction, a second portion fixed to a lower portion of the second suspending portion and extending in the first direction, and a third portion fixed to a lower portion of the third suspending portion, extending in the second direction, and connected to each of the first portion and the second portion. Each first guide portion may be provided at the first portion and the second portion. The plate-shaped body is held by the plurality of suspending portions, therefore, the suspender can surely hold the plate-shaped body. Further, when equipment has been installed in the groove, interference with the equipment can be avoided by a space between the first portion and second portion.

The body portion may include a first raceway connected to the first guide portion of the first portion and extending in the second direction and a second raceway separately from the first raceway, connected to the first guide portion of the second portion, and extending in the second direction. The first raceway and the second raceway may each include the second guide portion. The suspender can increase degree of freedom of suspending positions of objects to be suspended which is suspended from the raceways by increasing degree of freedom of locations of two raceways.

The body portion may include a straight member connected to each of a lower end of the first raceway and a lower end of the second raceway and extending in the second direction and the straight member may include the second guide portion. The suspender can suspend an object to be suspended below a space between the first raceway and the second raceway via the straight member.

The body portion may be connected to each of the first guide portion of the first portion and the first guide portion of the second portion and may extend in the second direction. The second guide portion may be provided at the body portion. The suspender can suspend an object to be suspended below a space between the first portion and the second portion in the plate-shaped body via the body portion.

The plurality of suspending portions may include a fourth suspending portion fixed to a fourth position in the groove and a fifth suspending portion fixed to a fifth position in the groove, the fifth position different from the fourth position. The plate-shaped body may include a fourth portion fixed to a lower end of the fourth suspending portion and extending in the first direction, and a fifth portion fixed to a lower end of the fifth suspending portion, extending in the second direction, and connected to the fourth portion. The first guide portion may be provided at the fourth portion. The body portion may include a third raceway connected to the first guide of the fourth portion and extending in the second direction. The third raceway may include the second guide portion. The third raceway is guided in the first direction by

the first guide portion so that the suspender can increase degree of freedom of a suspending position of an object to be suspended which is suspended from the second guide portion of the third raceway.

The fixed portion may include a sixth suspending portion fixed to a sixth position in the groove and a seventh suspending portion fixed to a seventh position in the groove, the seventh position different from the sixth position. The body portion may be a plate-shaped member attached to lower portions of the sixth suspending portion and seventh suspending portion and expanding horizontally and may include a first arc-shaped guide portion is the first guide portion corresponding to the sixth suspending portion, a second arc-shaped guide portion is the first guide portion corresponding to the seventh suspending portion, and the second guide portion extending straight. The first arc-shaped guide portion and the second arc-shaped guide portion may have an arc-shape centering on a common point and may face to each other at both sides of the common point interposed therebetween, and the second guide portion may extend between the first arc-shaped guide portion and the second arc-shaped guide portion in a plan view. By rotating the body portion around the common point, the suspender can increase degree of freedom of a suspending position of an object to be suspended which is suspended from the second guide portion.

The above-described brief summary does not enumerate all required features. Further, sub-combination of these groups of features also can be an invention.

BRIEF DESCRIPTION OF THE DRAWINGS

FIG. **1** is a perspective view illustrating an example of a suspender **100**.

FIG. **2** is an exploded perspective view illustrating an example of a suspender **100**.

FIG. **3** is a plan view illustrating an example of a suspender **100**.

FIG. **4** is a side view illustrating an example of a suspender **100** viewed from a first direction.

FIG. **5** is an enlarged view of cross-section of a ceiling.

FIG. **6** is a side view illustrating an example of a suspender viewed from a second direction.

FIG. **7** is a plan view illustrating a configuration according to FIG. **6**.

FIG. **8** is a perspective view illustrating an example of a suspender **200**.

FIG. **9** is a side view illustrating an example of a suspender **200**.

FIG. **10** is a perspective view illustrating an example of a suspender **300**.

FIG. **11** is a perspective view illustrating an example of a suspender **400**.

FIG. **12** is a plan view illustrating an example of a suspender **400**.

REFERENCE SIGNS LIST

100 Suspender
110 Fixed portion
111A First suspending portion
111B Second suspending portion
111C Third suspending portion
112 Plate-shaped body
112A First portion
112B Second portion
112C Third portion
113 Fixing tool
113A Upper flange
113B Lower flange
113C Coupling member
120 Body portion
121 First raceway
122 Second raceway
123 Straight member
124 Raceway
200 Suspender
220 Body portion
300 Suspender
310 Fixed portion
311D Fourth suspending portion
311E Fifth suspending portion
312 Plate-shaped body
312D Fourth portion
312E Fifth portion
320 Body portion
321 Third raceway
400 Suspender
410 Fixed portion
411F Sixth suspending portion
411G Seventh suspending portion
420 Body portion
B Building
C Ceiling
D**1** First direction
D**2** Second direction
F Frame member
G**1** First guide portion
G**2** Second guide portion
G**3** First arc-shaped guide portion
G**4** Second arc-shaped guide portion
H Suspension metal fitting
P**1** First position
P**2** Second position
P**3** Third position
P**4** Fourth position
P**5** Fifth position
P**6** Sixth position
P**7** Seventh position
Q Object to be suspended
Q**1** Suspension metal fitting
Q**2** Hanger
S Equipment
V Groove

DETAILED DESCRIPTION

Hereinafter, our suspenders will be described through examples. However, the following examples do not limit the scope of this disclosure. Further, all of combinations of features described in the examples are not necessarily required to achieve the desired effects.

FIG. **1** is a perspective view illustrating a first example of a suspender **100**. FIG. **2** is an exploded perspective view illustrating an example of a suspender **100**. FIG. **3** is a plan view illustrating an example of a suspender **100**. FIG. **4** is a side view illustrating an example of a suspender **100** viewed from a first direction D**1**. In this example, an X direction as a first direction D**1** and a Y direction as a second direction D**2** are orthogonal to each other. A Z direction is perpendicular to an X-Y plane. The X direction, the Y direction, and the Z direction are a so-called right-handed system. Upper and above mean the +Z direction. Lower and below mean the −Z direction. The X direction is an example of "a

predetermined direction." The Y direction is an example of "a direction intersected with a predetermined direction."

The suspender **100** is a member that suspends an object to be suspended Q via a grid-shaped groove V provided in a ceiling C included in a building B. An example of the building B includes, for example, a building of semiconductor factory. The ceiling C is suspended, for example, by a suspension metal fitting H from a ceiling portion of the building B. The ceiling C includes, for example, a plurality of rectangular frame members F arranged in a matrix, and a coupling member J that couples frame members F to each other. The coupling member J is coupled with the suspension metal fitting H and is arranged at every position where corners of four frame members F of a plurality of frame members F come together. The coupling member J couples corners of four frame members F to each other. The coupling member J is in a cross shape in a plan view. In the ceiling C, a grid-shaped groove V is formed among a plurality of frame members F. The first direction D**1** is parallel to the groove V of the grid-shaped groove, which extends in the X direction. The second direction D**2** is parallel to the groove V of the grid-shaped grooves V, which extends in the Y direction.

The suspender **100** includes a fixed portion **110** and a body portion **120**. The fixed portion **110** is a member fixed to several places in the groove V. The fixed portion **110** includes a first suspending portion **111**A, a second suspending portion **111**B, a third suspending portion **111**C, and a plate-shaped body **112**. The first suspending portion **111**A, the second suspending portion **111**B, and the third suspending portion **111**C are fixed to the groove V.

The first suspending portion **111**A is fixed to a first portion P**1** in the groove V. The second suspending portion **111**B is fixed to a second position P**2** in the groove V. The second position P**2** is a different position from the first position P**1**. The third suspending portion **111**C is fixed to a third portion P**3** in the groove V. The third position P**3** is a different position from the first position P**1** and the second position P**2**. The first suspending portion **111**A, the second suspending portion **111**B and the third suspending portion **111**C are arranged in a state where heights of lower ends thereof are the same.

The plate-shaped body **112** is attached to a lower end of a plurality of suspending portions **111** and expands in a horizontal direction. The plate-shaped body **112** includes a first portion **112**A, a second portion **112**B, and a third portion **112**C. The first portion **112**A is fixed to a lower portion of the first suspending portion **111**A and extends in the first direction D**1**. The second portion **112**B is fixed to a lower portion of the second suspending portion **111**B and extends in the first direction D**1**. The third portion **112**C is fixed to a lower portion of the third suspending portion **111**C and extends in the second direction D**2**. The third portion **112**C is connected to each of the first portion **112**A and the second portion **112**B. The first portion **112** A, the second portion **112**B, and the third portion **112**C are arranged, for example, such that the plate-shaped body **112** has a C-shaped or U-shaped in a plan view.

A first guide portion G**1** is provided at each of the first portion **112**A and the second portion **112**B. The first guide portion G**1** connects the fixed portion **110** and the body portion **120** to each other. The guide portion G**1** is an opening portion that vertically penetrates the plate-shaped body **112**. The first guide portion G**1** extends in the first direction D**1**. For example, a connecting position of the body portion **120** with respect to the fixed portion **110** can be changed within a range of length of the first guide portion G**1**.

The body portion **120** is connected with the fixed portion **110** and suspends an object to be suspended Q. The body portion **120** includes a first raceway **121**, a second raceway **122**, and a straight member **123**. The first raceway **121** is connected to the first guide portion G**1** of the first portion **112**A. The first raceway **121** extends in the second direction D**2**. The second raceway **122** is connected to the first guide portion G**1** of the second portion **112**B separately from the first raceway **121**. The second raceway **122** extends in the second direction D**2**. The first raceway **121** and the second raceway **122** are arranged side by side in the second direction D**2**.

For example, the straight member **123** is plate-shaped and extends in the second direction D**2**. The straight member **123** is connected to a lower end of the first raceway **121** and to a lower end of the second raceway **122** with a connecting member such as bolt. An end portion of the straight member **123** in the first direction D**1** is bent downwards to form an L-shape as shown in FIG. **6**. With this configuration, a stiffness with respect to a vertical load is ensured.

The first raceway **121**, the second raceway **122**, and straight member **123** each include the second guide portion G**2**. The second guide portion G**2** is an opening portion that penetrates vertically bottom portions of the first race way **121** and the second raceway **122** and the straight member **123**. The second guide portion G**2** extends in the second direction D**2**. A suspension metal fitting Q**1** for an object to be suspended Q is inserted vertically into the second guide portion G**2**. A hunger Q**2** is fixed to a lower end of the suspension metal fitting Q**1** through a fixing a member such as a nut. The second guide portion G**2** can change a position of the suspension metal fitting Q**1** in the second direction D**2**. Changing a position of the suspension metal fitting Q**1** in the second direction D**2** enables a change of a connecting position of an object to be suspended Q with respect to the body portion **120** in the second D**2**. Further, the second guide G**2** of the straight member **123** is arranged between the first raceway **121** and the second raceway **122** in the second direction D**2**. Therefore, the object to be suspended Q can be suspended via the straight member **123** below a space between the first raceway **121** and the second raceway **122**. Further, the straight member **123** is not directly connected to the plate-shaped body **112**, but it is connected via the first raceway **121** and the second raceway **122**. Therefore, a large distance between the straight member **123** and the ceiling C is ensured. Thus, even when equipment such as a fire alarm or a sprinkler is arranged at the groove V of the ceiling C, the object to be suspended Q can be suspended without being interrupted by the equipment.

FIG. **5** is an enlarged view of cross-section of the ceiling C. The first suspending portion **111**A, the second suspending portion **111**B, and the third suspending portion **111**C are fixed to the groove V via a fixing tool **113** as shown in FIG. **5**. The fixing tool **113** includes an upper flange **113**A, a lower flange **113**B, and a coupling member **113**C. The upper flange **113**A is arranged between upper surfaces of frame members F adjacent to each other. The lower flange **113**B is arranged between lower surfaces of frame members F adjacent to each other. The coupling member **113**C couples the upper flange **113**A and the lower flange **113**B to each other.

For example, the upper flange **113**A is a rectangular plate-shaped member in a plan view and its length in the transverse direction is shorter than the width of the groove V. When using a fixing tool **113** including this upper flange

113A, a worker places the fixing tool **113** at a desired position below the groove such that a longer side of the upper flange **113**A is parallel to the groove V. Then the worker inserts the upper flange **113**A of the fixing tool **113** into the groove V and rotates the fixing tool **113** by 90 degrees. As a result, the fixing tool **113** can be fixed to a desired position in the groove V.

For example, the upper flange **113**A may be two rectangular plate-shaped members in a plan view joined with a hinge and being able to be opened or closed by an operating member (not illustrated). When using a fixing tool **113** including this upper flange **113**A, a worker places the fixing tool **113** at a desired position below the groove V in a state where the two plate-shaped members joined with a hinge are closed. Then, the worker inserts the upper flange **113**A of the fixing tool **113** into the groove V and operates the operating member to open the two plate-shaped members. As a result, the fixing tool **113** can be fixed to a desired position in the groove V.

FIG. **6** is a side view illustrating an example of a suspender **100** viewed from a second direction D**2**. FIG. **7** is a plan view illustrating a configuration according to FIG. **6**. An object to be suspended Q is supported by a suspension metal fitting Q**1** suspended via the suspender **100** from the first raceway **121** and the second raceway **122** and another suspension metal fitting Q**1** suspended from a raceway **124**. The suspender **100** can change a position of the object to be suspended Q with respect to the fixed portion **110** in the first direction D**1** within a range of length of the first guide portion G**1**. Therefore, even if a space between the grooves V adjacent to each other does not match the dimension of the object to be suspended Q, the object to be suspended Q can be suspended and degree of freedom of a suspending position can be increased.

The suspender **100** according to the first example includes the first guide portion G**1**, therefore it can change a position of the object to be suspended Q with respect to the fixed portion **110** in the first direction D**1** within a range of a length of the first guide portion G**1**. Further, the suspender **100** according to the first example includes the second guide portion G**2**, therefore it can change a position of the object to be suspended Q with respect to the fixed portion **110** in the first second direction D**2** within a range of a length of the second guide portion G**2**. Thereby, degree of freedom of a suspending position of the object to be suspended Q suspended from the ceiling can be increased.

FIG. **8** is a perspective view illustrating an example of a suspender **200** of a second example. FIG. **9** is a side view illustrating an example of a suspender **200**. The suspender **200** includes a fixed portion **110** and a body portion **220**.

Configuration of the fixed portion **110** is the same as that of the fixed portion **110** according to the first example. The fixed portion **110** is arranged without being interrupted by equipment S such as fire alarm or a sprinkler arranged in the groove V of the ceiling C. In the second example, a first raceway **121** and a second raceway **122** cannot be provided at a body portion **220**.

The body portion **220** is connected to the fixed portion **110** and suspends an object to be suspended Q. For example, the body portion **220** is plate-shaped and extends in the second direction D**2**. The body portion **220** is connected to each of the first guide portion G**1** of the first portion **112**A and the first guide portion G**1** of the second portion **112**B in the fixed portion **110** with a connecting member such as a bolt.

The body portion **220** includes a second guide portion G**2**. The second guide portion G**2** is an opening portion that penetrates vertically the body portion **220**. The second guide portion G**2** extends in the second direction D**2**. A suspension metal fitting Q**1** of an object to be suspended Q is inserted vertically into the second guide portion G**2**. The hunger Q**2** is fixed to a lower end of the suspension metal fitting Q**1** via a fixing member such as a nut. The second guide portion G**2** can change a position of the suspension metal fitting Q**1** in the second direction D**2**. Changing a position of the suspension metal fitting Q**1** in the second direction D**2** enables a change of a connecting position of the object to be suspended Q with respect to body portion **220** in the second direction D.

The suspender **200** of the second example can change a position of the object to be suspended Q with respect to the fixed portion **110** in the first direction D**1** within a range of a length of the first guide portion G**1**. Further, the suspender **200** of the second example can change a position of the object to be suspended Q with respect to the fixed portion **110** in the second direction D**2** within a range of a length of the second guide portion G**2**. The object to be suspended Q can be suspended via the body portion **220** below a space between a first portion **112**A and a second portion **112**B in the plate-shaped body **112** of the fixed portion **110**. Therefore, for example, even when equipment S is installed in the ceiling C, the object to be suspended Q can be suspended below the equipment S. Vertical lengths of the first suspending portion **111**A, the second suspending portion **111**B, and the third suspending portion **111**C are designed so that the body portion **220** is arranged at a height that prevent an interference with the equipment S. Therefore, degree of freedom of a suspending position of the object to be suspended Q suspended from the ceiling C can be increased.

FIG. **10** is a perspective view illustrating an example of a suspender **300** of a third example. The suspender **300** include a fixed portion **310** and a body portion **320**.

The fixed portion **310** is fixed to multiple places in the groove V. The fixed portion **310** includes a fourth suspending portion **311**D, a fifth suspending portion **311**E and a plate-shaped body **312**.

The fourth suspending portion **311**D is fixed to a fourth position P**4** in the groove V. The fifth suspending portion **311**E is fixed to a fifth portion P**5** in the groove V. The fifth portion P**5** is a position different from the fourth position P**4**. The fourth suspending portion **311**D and the fifth suspending portion **311**E are arranged in a state where they have the same heights of their lower ends.

The plate-shaped body **312** is fixed to lower ends of a plurality of suspending portions **311**. The plate-shaped body **312** includes a fourth portion **312**D and a fifth portion **312**E. The fourth portion **312**D is fixed to a lower portion of the fourth suspending portion **311**D and extends in the first direction D**1**. The fifth portion **312**E is fixed to a lower portion of the fifth suspending portion **311**E and extends in the second direction D**2**. The fifth portion **312**E is connected to the fourth portion **312**D. In the plate-shaped body **312**, for example, the fourth portion **312**D and the fifth portion **312**E are arranged to form an L-shape in a plan view.

The first guide portion G**1** is provided at the fourth portion **312**D. The first guide portion G**1**T connects the fixed portion **310** and the body portion **320** to each other. The first guide portion G**1** is an opening portion that vertically penetrates the plate-shaped body **312**. The first guide portion G**1** extends in the first direction D**1**. For example, a connecting position of the body portion **320** with respect to the fixed portion **310** can be changed within a length of the first guide portion G.

The body portion **320** is connected to the fixed portion **310** and suspends an object to be suspended Q. The body

portion **320** includes a third raceway **321**. The third raceway **321** is connected to the first guide portion G**1** of the fourth portion **312**D. The third raceway **321** extends in the second direction D**2**.

The third raceway **321** includes the second guide portion G**2**. The second guide portion G**2** is an opening portion that vertically penetrates a bottom portion of the third raceway **321**. The second guide portion G**2** extends in the second direction D**2**. The suspension metal fitting Q**1** of the object to be suspended Q is vertically inserted into the second guide portion G**2**. The hanger Q**2** is fixed to a lower end of the suspension metal fitting Q**1** via a fixing member such as a nut. The second guide portion G**2** can change a position of the suspension metal fitting Q**1** in the second direction D**2**. Changing a position of the suspension metal fitting Q**1** in the second direction D**2** enables a change of a connecting position of the object to be suspended Q with respect to the body part **320** in the second direction D**2**.

A suspender **300** of the third example can change a position of the object to be suspended Q with respect to the fixed portion **310** within a length of the first guide portion G**1** in the first direction D**1**. Further, the suspender **300** of the third example can change a position of the object to be suspended Q with respect to the fixed portion **310** within a length of the second guide portion G**2** in the second direction D**2**. The third raceway **321** is guided by the first guide portion G**1** in the first direction D**1**, thus enabling an increase in degree of freedom of a position to suspend the object to be suspended Q from the second guide portion G**2** of the third raceway **321**.

FIG. **11** is a perspective view illustrating an example of a suspender **400** of a fourth example. FIG. **12** is a plan view illustrating an example of a suspender **400**. The suspender **400** includes a fixed portion **410** and a body portion **420**.

The fixed portion **410** is fixed to multiple places in the groove V. The fixed portion **410** includes a sixth suspending portion **411**F and a seventh suspending portion **411**G.

The sixth suspending portion **411**F is fixed to a sixth position P**6** in the groove V. A seventh suspending portion **411**G is fixed to a seventh position P**7** in the groove V. The seventh position P**7** is a different position from the sixth position P**6**. The sixth suspending portion **411**F and the seventh suspending portion **411**G are arranged in a state where they have the same heights of their lower ends.

The body portion **420** is connected to the fixed portion **410** and suspends an object to be suspended Q. The body portion **420** is a plate-shaped member fixed to lower ends of a plurality of suspending portions **411** and expanding in a horizontal direction. For example, the body portion **420** has a round shape in a plan view. The shape of the body portion **420** in a plan view is not limited to a round shape. It may be a multangular shape such as a triangle shape or a rectangular shape, or an elliptical shape.

The body portion **420** includes a first arc-shaped guide portion G**3**, a second arc-shaped guide portion G**4**, and the second guide portion G**2**. The first arc-shaped guide portion G**3** and the second arc-shaped guide portion G**4** are examples of "the first guide portion." The first arc-shaped guide portion G**3** and the second arc-shaped guide portion G**4** have an arc shape centering on a common point 0 and are arranged face to face at both sides of the point 0 in a plan view. For example, the point 0 may be arranged at the center of the body portion **420** which has a circular shape in a plan view. For example, the first arc-shaped guide portion G**3** and the second arc-shaped guide portion G**4** are provided within a range of 90-degree centering on the point 0. However, this disclosure is not limited thereto. The first arc-shaped guide portion G**3** and the second arc-shaped guide portion G**4** may be provided within a range of an angle smaller than 90-degree or an angle larger than 90-degree. The first arc-shaped guide portion G**3** and the second arc-shaped guide portion G**4** are opening portions that vertically penetrate the body portion **420**. A connecting position of the body portion **420** with respect to the fixed portion **410** can be changed within a range of lengths of the first arc-shaped guide portion G**3** and the second arc-shaped guide portion G**4**.

The second guide portion G**2** is a straight line, for example, and extends between the first arc-shaped guide portion G**3** and the second arc-shaped guide portion G**4**. The second guide G**2** is provided in an area including the point 0. The second guide portion G**2** is an opening portion that vertically penetrates the body portion **420**. The suspension metal fitting Q**1** of the object to be suspended Q is vertically inserted into the second guide portion G**2**. The hanger Q**2** is fixed to a lower end of the suspension metal fitting Q**1** via the fixing member such as a nut. The second guide portion G**2** can change a position of the suspension metal fitting Q**1** in the second direction D**2**. Changing a position of the suspension metal fitting Q**1** in the second direction D**2** enables a change of a connecting position of the object to be suspended Q with respect to the body portion **420** in the second direction D**2**.

In the suspender **400** of a fourth example, degree of freedom of a suspending position of the object to be suspended Q suspended from the second guide portion G**2** can be increased by rotating the plate-shaped body portion **320** centering on the common point 0.

As described above, our suspenders are described using examples. However, a technical range of this disclosure is not limited thereto. It will be apparent to those skilled in the art that various modifications or improvements can be added to the above-described examples. Matters described concerning a specific example can be applied to other examples to the extent that they are not technologically inconsistent. It is apparent that an example to which such modifications or improvements have been added can also be included in a technical range of this disclosure. Further, the contents of Japanese Patent Application No. 2020-179085 and all the documents cited in the above-mentioned examples are incorporated herein by reference.

The invention claimed is:

1. A suspender configured to suspend an object to be suspended via a grid-shaped groove provided at a ceiling included in a building, comprising:

a fixed portion fixed to multiple places in the grid-shaped groove; and

a body portion connected to the fixed portion and configured to suspend the object to be suspended, wherein

a first guide portion configured to connect the fixed portion and the body portion to each other and extending in a first direction is provided at the fixed portion or the body portion,

a connecting position of the body portion with respect to the fixed portion is changeable within a range of a length of the first guide portion,

a second guide portion configured to suspend the object to be suspended and extending in a second direction different from the first direction is provided at the body portion, and

a suspending position of the object to be suspended with respect to the body portion is changeable within a range of a length of the second guide portion.

2. The suspender according to claim 1, wherein

the first direction is parallel to a groove extending in a predetermined direction out of the grid-shaped groove, and

the second direction is parallel to a groove extending in a direction intersecting with the predetermined direction out of the grid-shaped groove.

3. The suspender according to claim 1, wherein the fixed portion includes a plurality of suspending portions fixed to the groove and a plate-shaped body attached to lower ends of the plurality of suspending portions and expanding horizontally.

4. The suspender according to claim 3, wherein the plurality of suspending portions includes:

a first suspending portion fixed to a first position in the groove;

a second suspending portion fixed to a second position in the groove, the second position different from the first position; and

a third suspending portion fixed to a third position in the groove, the third position different from the first position and the second position,

the plate-shaped body includes:

a first portion fixed to a lower portion of the first suspending portion and extending in the first direction;

a second portion fixed to a lower portion of the second suspending portion and extending in the first direction; and

a third portion fixed to a lower portion of the third suspending portion, extending in the second direction, and connected to each of the first portion and the second portion, and

the first guide portion is provided at each of the first portion and the second portion.

5. The suspender according to claim 4, wherein the body portion includes:

a first raceway connected to the first guide portion of the first portion and extending in the second direction; and

a second raceway separately from the first raceway, connected to the first guide portion of the second portion, and extending in the second direction, and

the first raceway and the second raceway each include the second guide portion.

6. The suspender according to claim 5, wherein

the body portion includes a straight member connected to each of a lower end of the first raceway and a lower end of the second raceway, and extending in the second direction, and

the straight member includes the second guide portion.

7. The suspender according to claim 5, wherein

the body portion is connected to each of the first guide portion of the first portion and the first guide portion of the second portion and extends in the second direction, and

the second guide portion is provided at the body portion.

8. The suspender according to claim 3, wherein the plurality of suspending portions include:

a fourth suspending portion fixed to a fourth position in the groove; and

a fifth suspending portion fixed to a fifth position in the groove, the fifth position different from the fourth position,

the plate-shaped body includes:

a fourth portion fixed to a lower end of the fourth suspending portion and extending in the first direction; and

a fifth portion fixed to a lower end of the fifth suspending portion, extending in the second direction, and connected to the fourth portion,

the first guide portion is provided at the fourth portion,

the body portion includes a third raceway connected to the first guide of the fourth portion and extending in the second direction, and

the third raceway includes the second guide portion.

9. The suspender according to claim 1, wherein the fixed portion includes:

a sixth suspending portion fixed to a sixth position in the groove; and

a seventh suspending portion fixed to a seventh position in the groove, the seventh position different from the sixth position,

the body portion is a plate-shaped member attached to lower portions of the sixth suspending portion and the seventh suspending portion and expanding horizontally, and includes:

a first arc-shaped guide portion that is the first guide portion corresponding to the sixth suspending portion;

a second arc-shaped guide portion that is the first guide portion corresponding to the seventh suspending portion; and

the second guide portion extending straight,

the first arc-shaped guide portion and the second arc-shaped guide portion have an arc shape centering on a common point and face each other with the common point interposed therebetween, and

the second guide portion extends between the first arc-shaped guide portion and the second arc-shaped guide portion in a plan view.

* * * * *