US 20250269741A1

(19) United States
(12) Patent Application Publication
GOITSUKA
(10) Pub. No.: US 2025/0269741 A1
(43) Pub. Date: Aug. 28, 2025

(54) **POWER STORAGE DEVICE AND VEHICLE**

(71) Applicant: **TOYOTA JIDOSHA KABUSHIKI KAISHA**, Aichi-ken (JP)

(72) Inventor: **Shinya GOITSUKA**, Nisshin-shi (JP)

(21) Appl. No.: **19/021,171**

(22) Filed: **Jan. 15, 2025**

(30) **Foreign Application Priority Data**

Feb. 26, 2024 (JP) ..... 2024-026639

**Publication Classification**

(51) **Int. Cl.**

| | |
|---|---|
| ***B60L 50/64*** | (2019.01) |
| ***B60K 1/04*** | (2019.01) |
| ***B60L 50/60*** | (2019.01) |

(52) **U.S. Cl.**

CPC ..... ***B60L 50/64*** (2019.02); ***B60K 1/04*** (2013.01); ***B60L 50/66*** (2019.02); *B60K 2001/0438* (2013.01)

(57) **ABSTRACT**

A power storage device includes: a power storage module including a plurality of power storage cells; and a case accommodating the power storage module. The case includes an upper cover covering the power storage module from above and a lower cover covering the power storage module from below. The power storage module is secured to the upper cover. The lower cover is detachably secured to the upper cover.

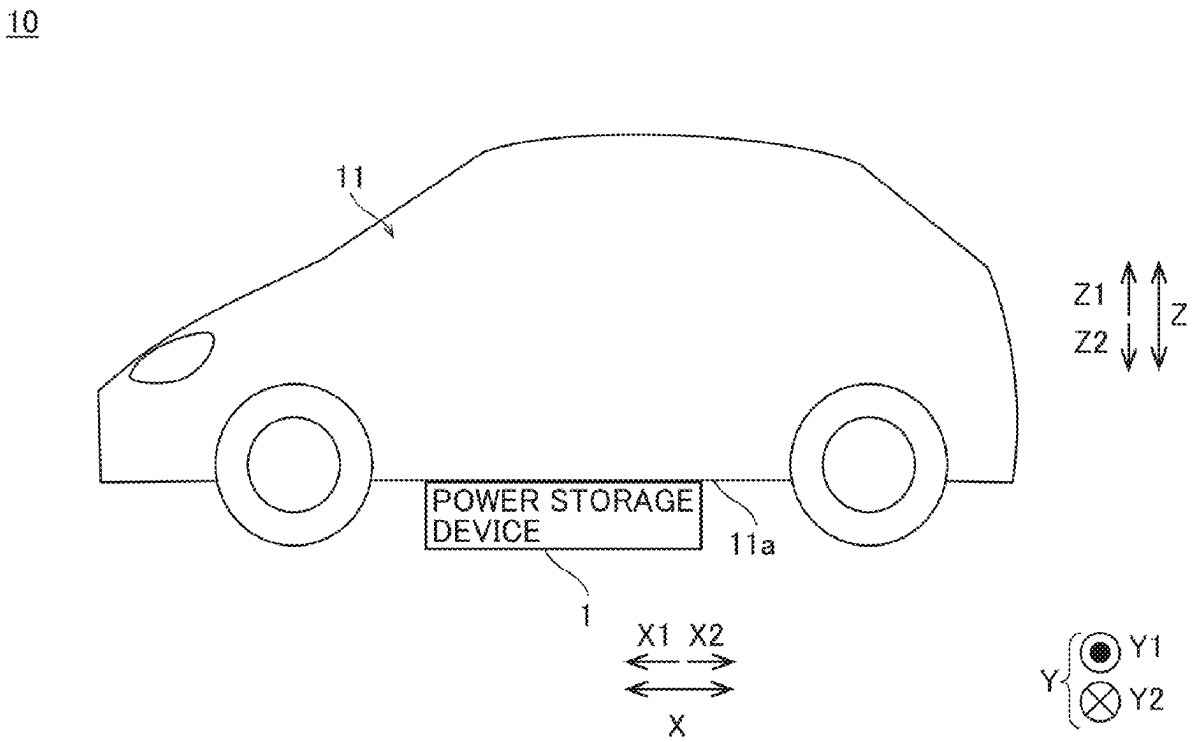

FIG.1

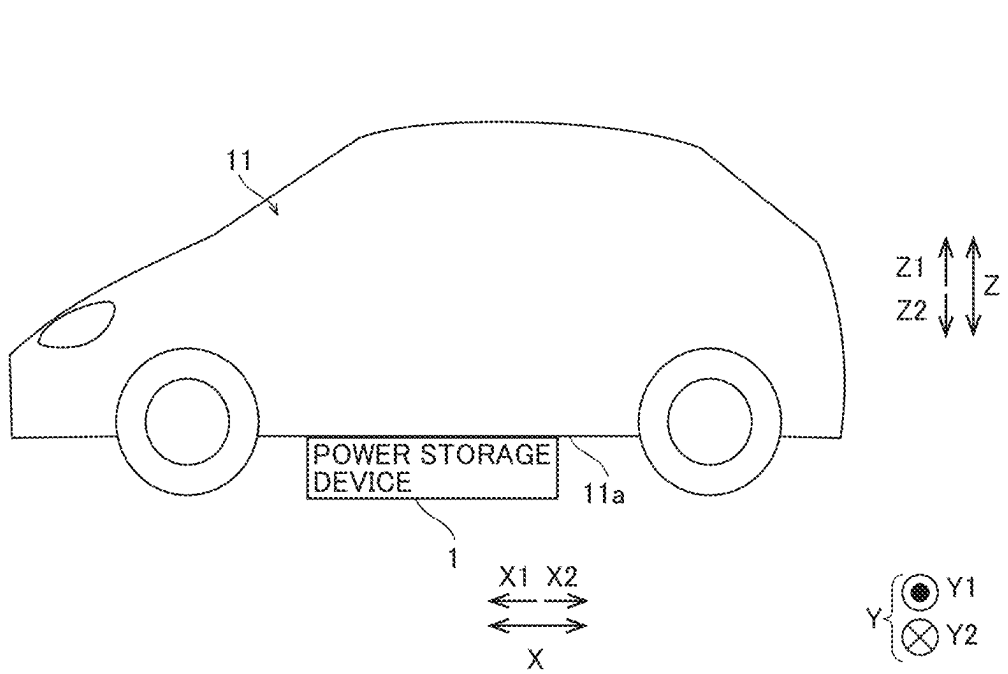

FIG.2

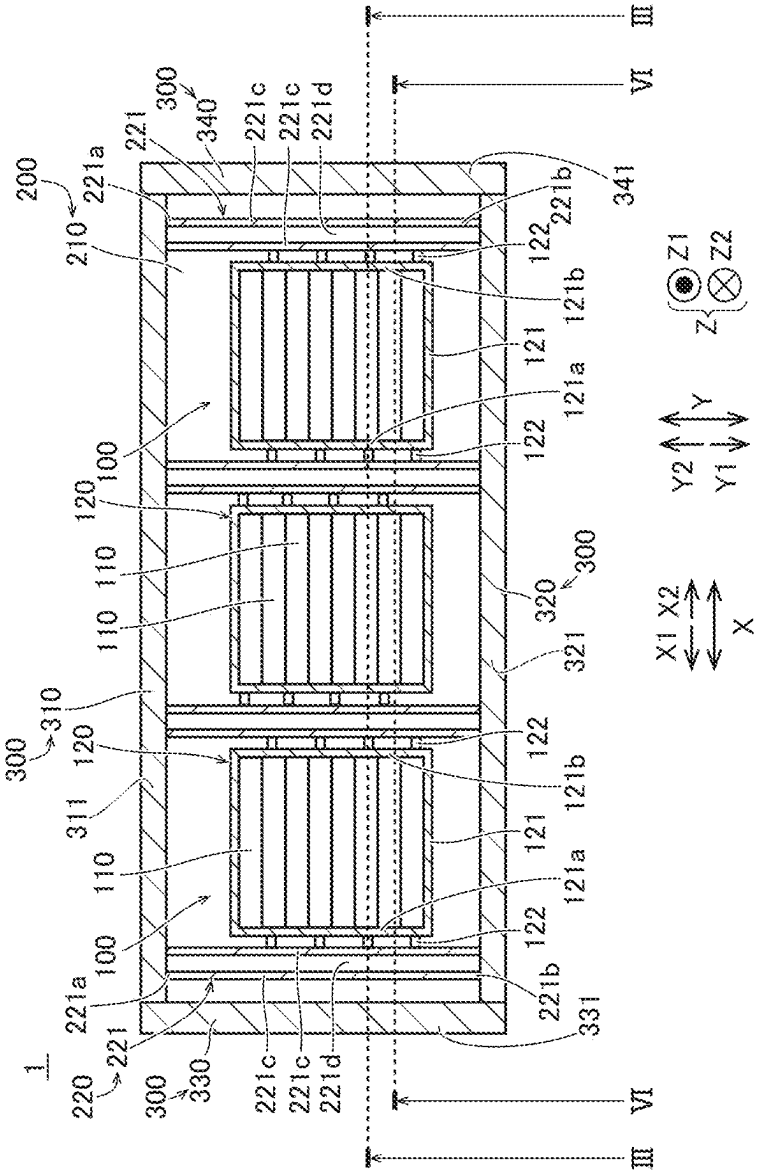
1
200
210
220
221
221a
221b
221c
221d
300
310
311
320
321
330
331
340
341
100
110
120
121
121a
121b
122
III
VI
X
X1
X2
Y
Y1
Y2
Z
Z1
Z2

FIG.3

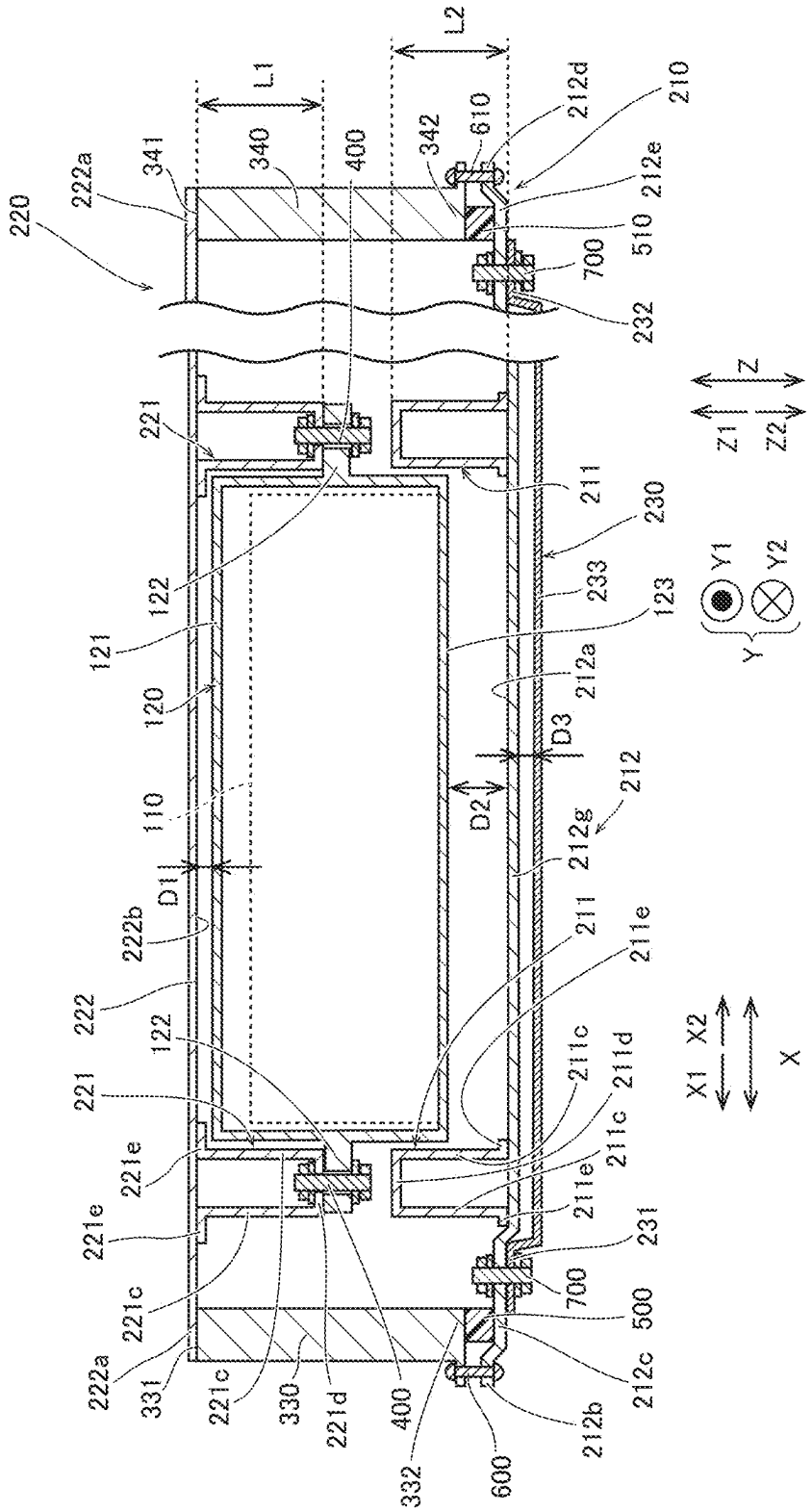
220
222a
341
340
400
342
610
212d
210
212e
510
700
232
L1
L2
221
122
121
120
110
D1
222b
222
221
221e
221e
221c
222a
331
221c
330
221d
400
332
600
212b
212c
500
700
231
211e
211c
211d
211c
211e
211
211e
212g
212
D2
D3
212a
123
233
230
211
Z
Z1
Z2
Y1
Y2
Y
X1
X2
X

FIG.4

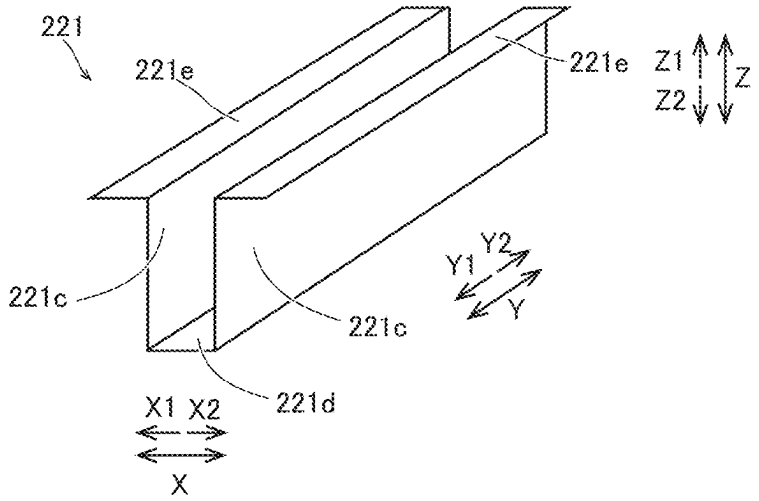

FIG.5

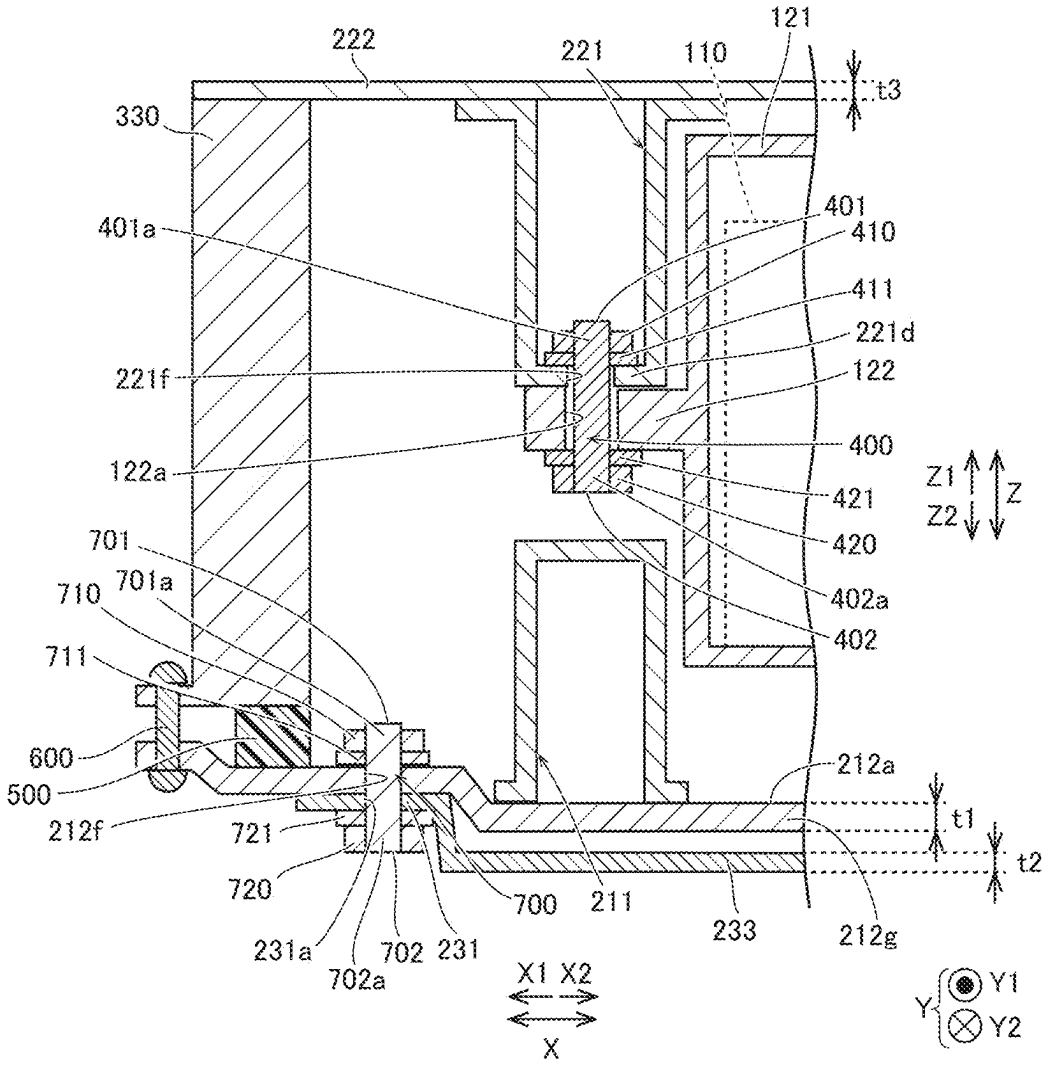
222
221
110
121
t3
330
401a
401
410
411
221d
221f
122
122a
400
421
420
402a
402
Z1
Z2
Z
701
701a
710
711
600
500
212f
721
720
700
211
233
212a
t1
t2
212g
231a
702
231
702a
X1 X2
X
Y
Y1
Y2

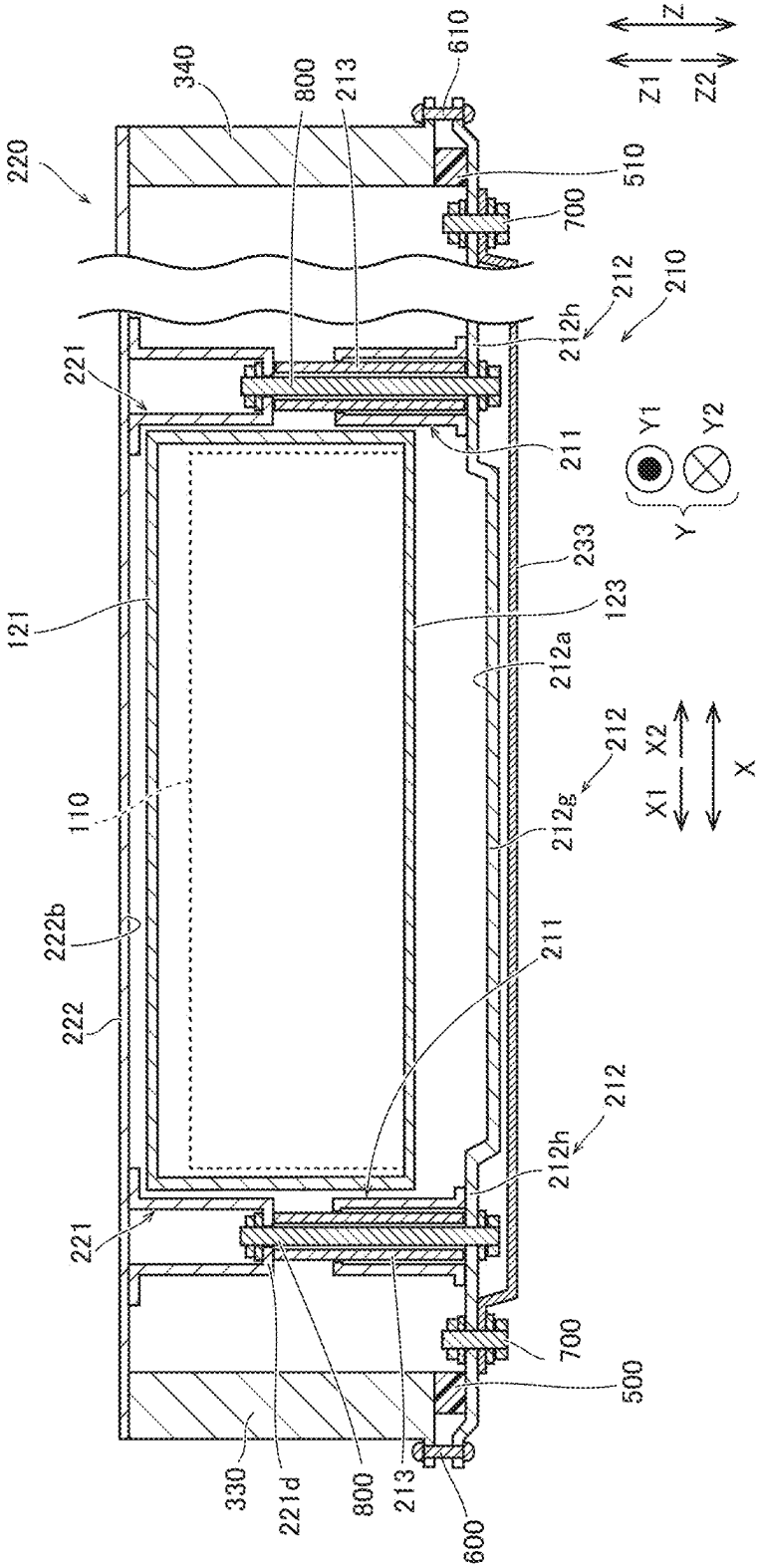
220
340
800
213
610
510
700
Z
Z1
Z2
212
210
212h
221
211
Y1
Y2
Y
233
123
121
212a
212
X2
X1
X
212g
110
222b
222
211
212
212h
221
700
500
330
221d
800
213
600

FIG.6

FIG.7

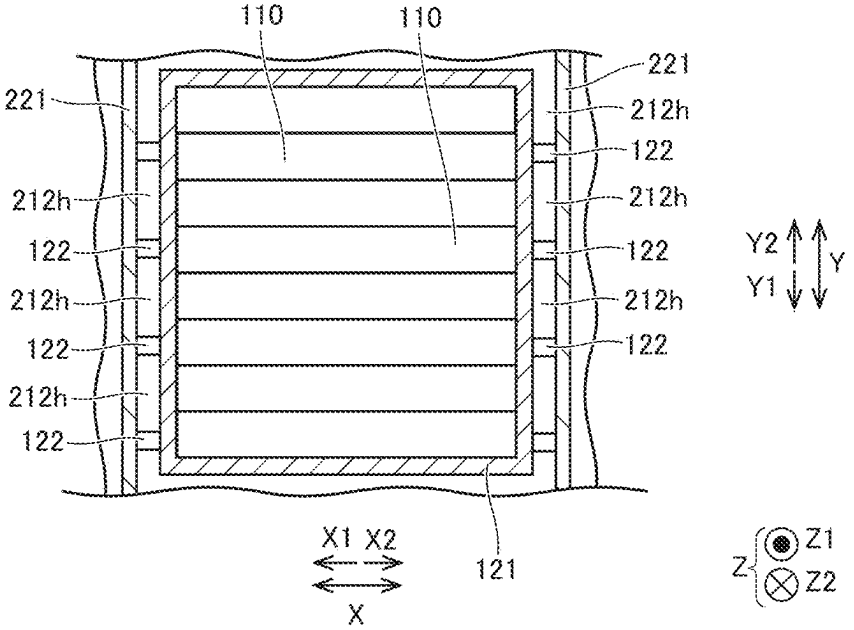
110
110
221
221
212h
122
212h
212h
122
122
212h
212h
122
122
212h
122
Y2
Y1
Y
X1 X2
X
121
Z
Z1
Z2

FIG.8

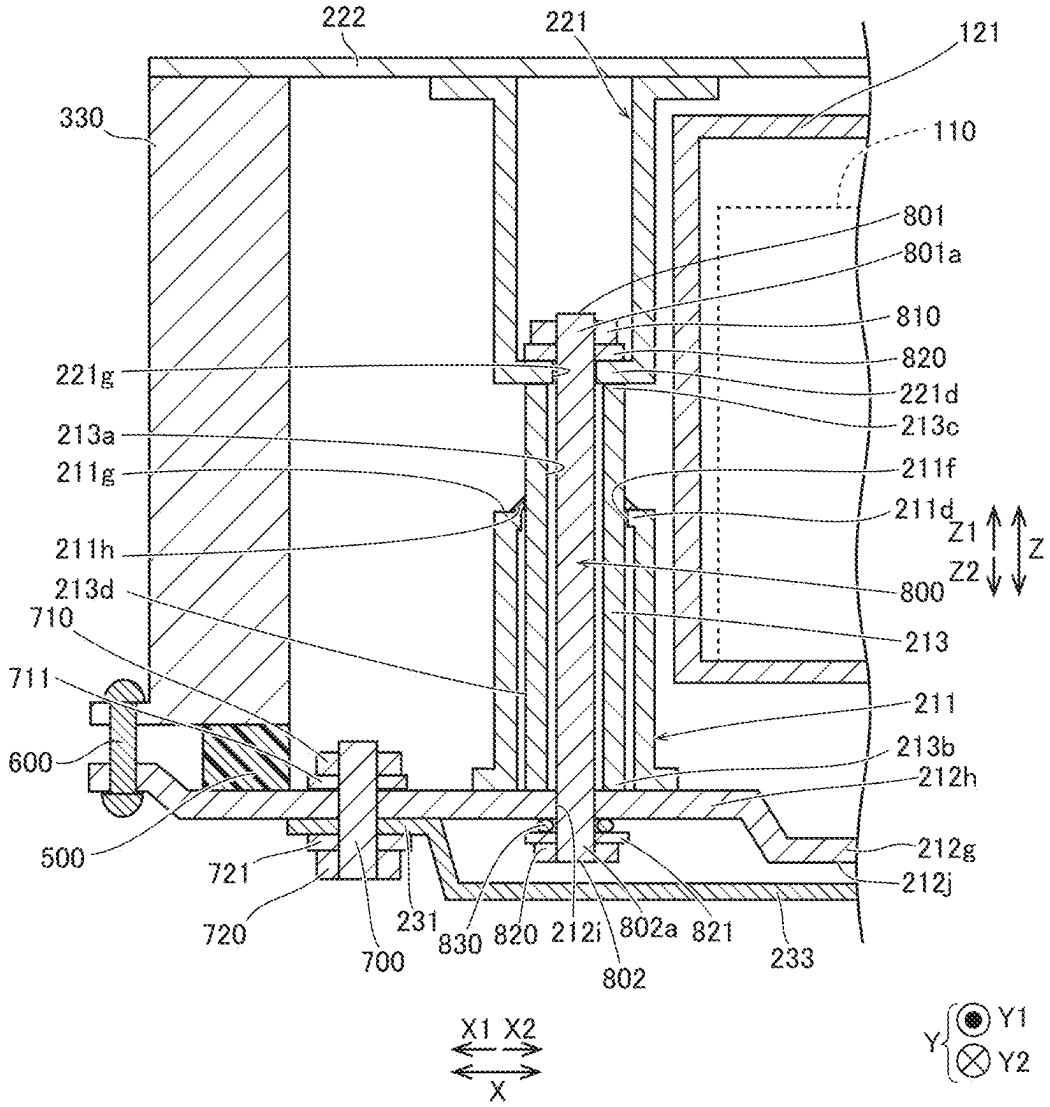
222
221
121
330
110
801
801a
810
820
221g
221d
213c
213a
211g
211f
211d
Z1
Z
Z2
211h
800
213d
710
213
711
211
600
213b
212h
500
212g
721
212j
720
231
830
820
212i
802a
821
233
700
802
X1 X2
X
Y
Y1
Y2

FIG.9

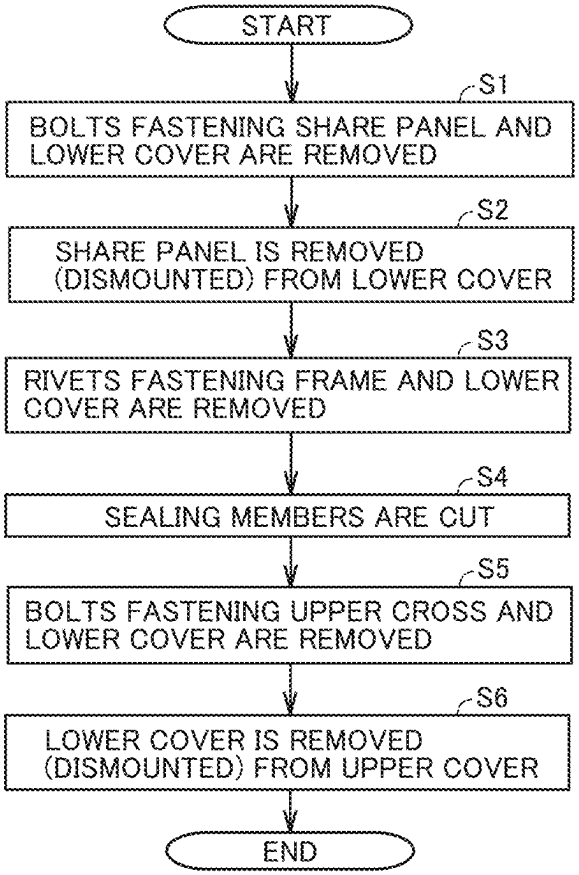
START
S1
BOLTS FASTENING SHARE PANEL AND LOWER COVER ARE REMOVED
S2
SHARE PANEL IS REMOVED (DISMOUNTED) FROM LOWER COVER
S3
RIVETS FASTENING FRAME AND LOWER COVER ARE REMOVED
S4
SEALING MEMBERS ARE CUT
S5
BOLTS FASTENING UPPER CROSS AND LOWER COVER ARE REMOVED
S6
LOWER COVER IS REMOVED (DISMOUNTED) FROM UPPER COVER
END

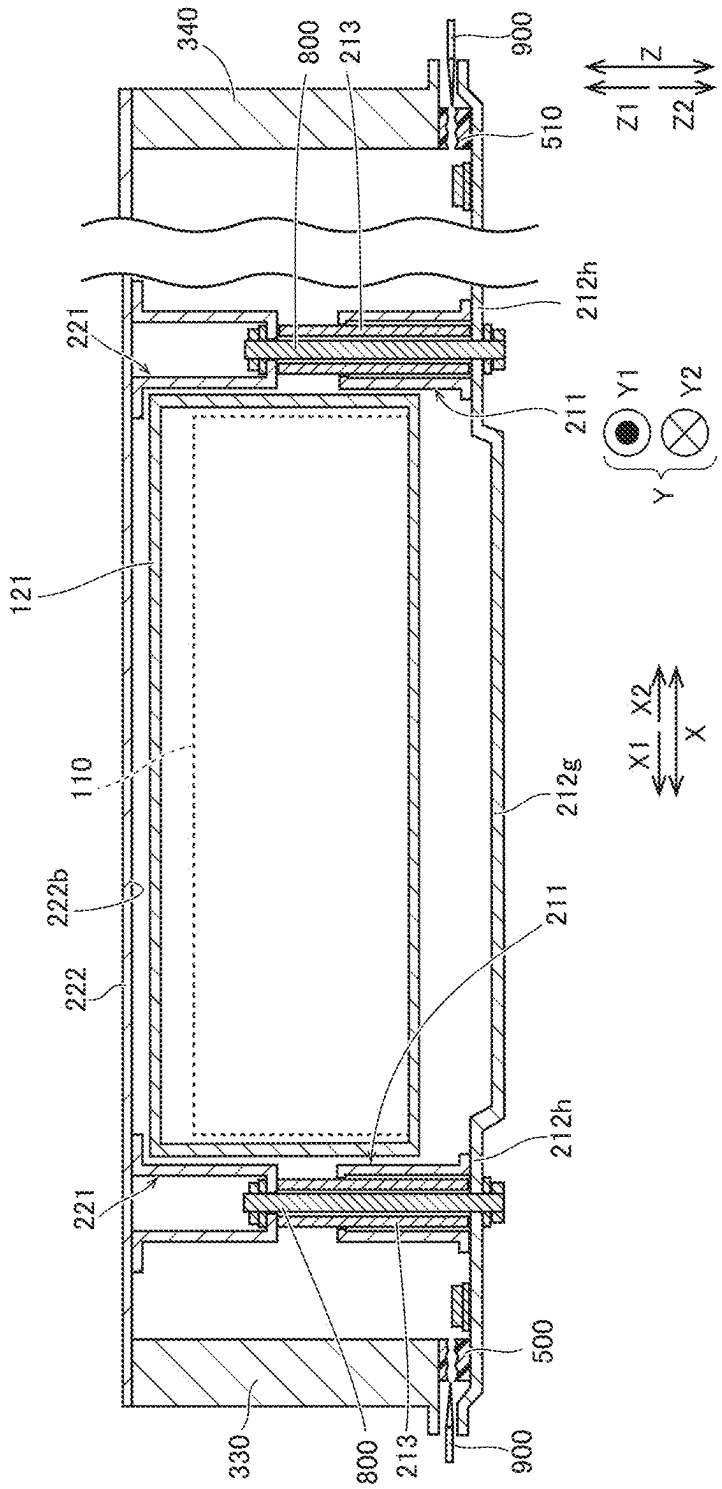
340
800
213
900
510
Z
Z1
Z2
212h
221
211
Y1
Y2
Y
121
110
X1
X2
X
212g
222b
222
211
212h
221
500
330
800
213
900

FIG.10

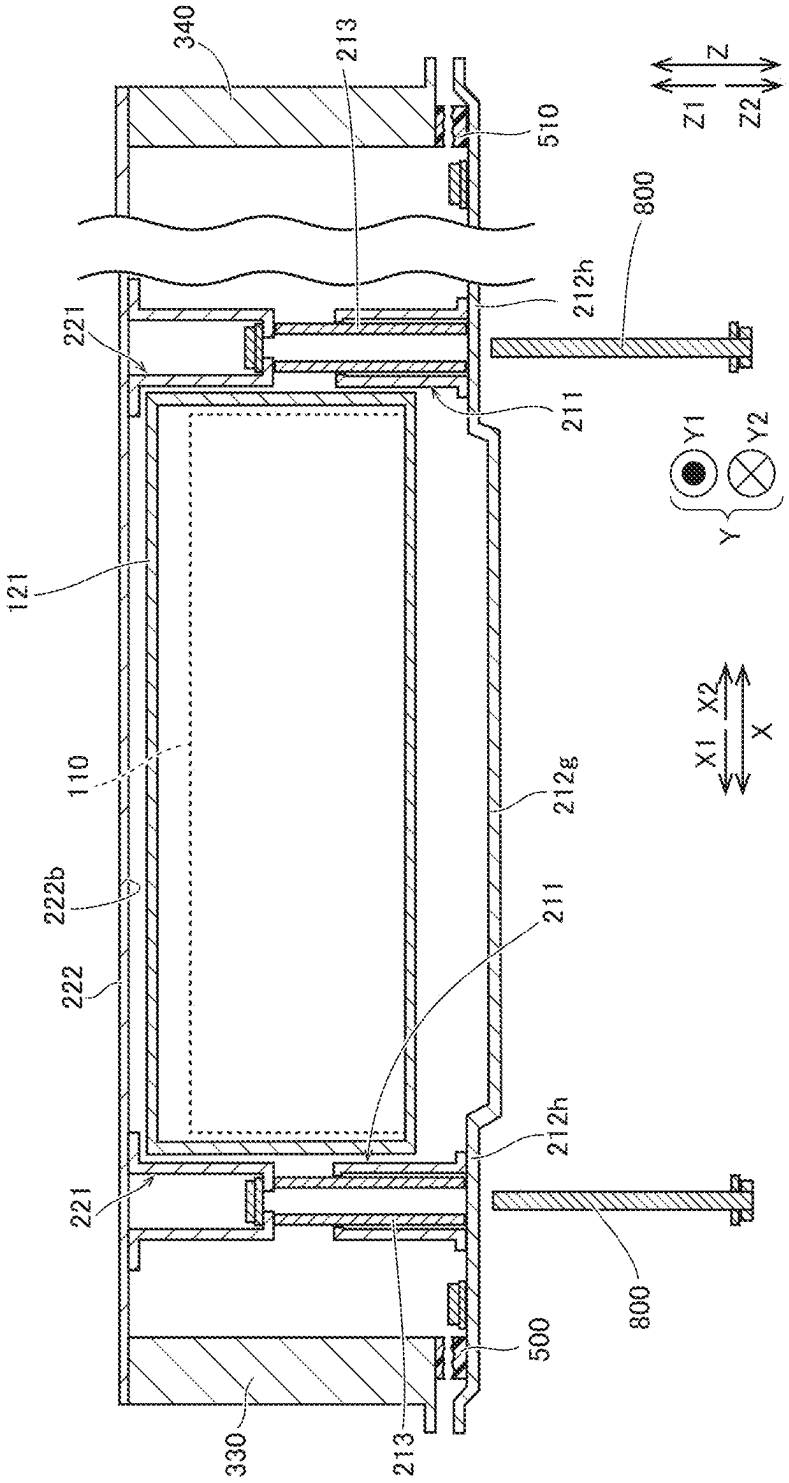
340
213
510
Z
Z1
Z2
800
212h
221
211
Y1
Y2
Y
121
X1
X2
X
110
212g
222b
211
222
212h
221
800
500
330
213

FIG.11

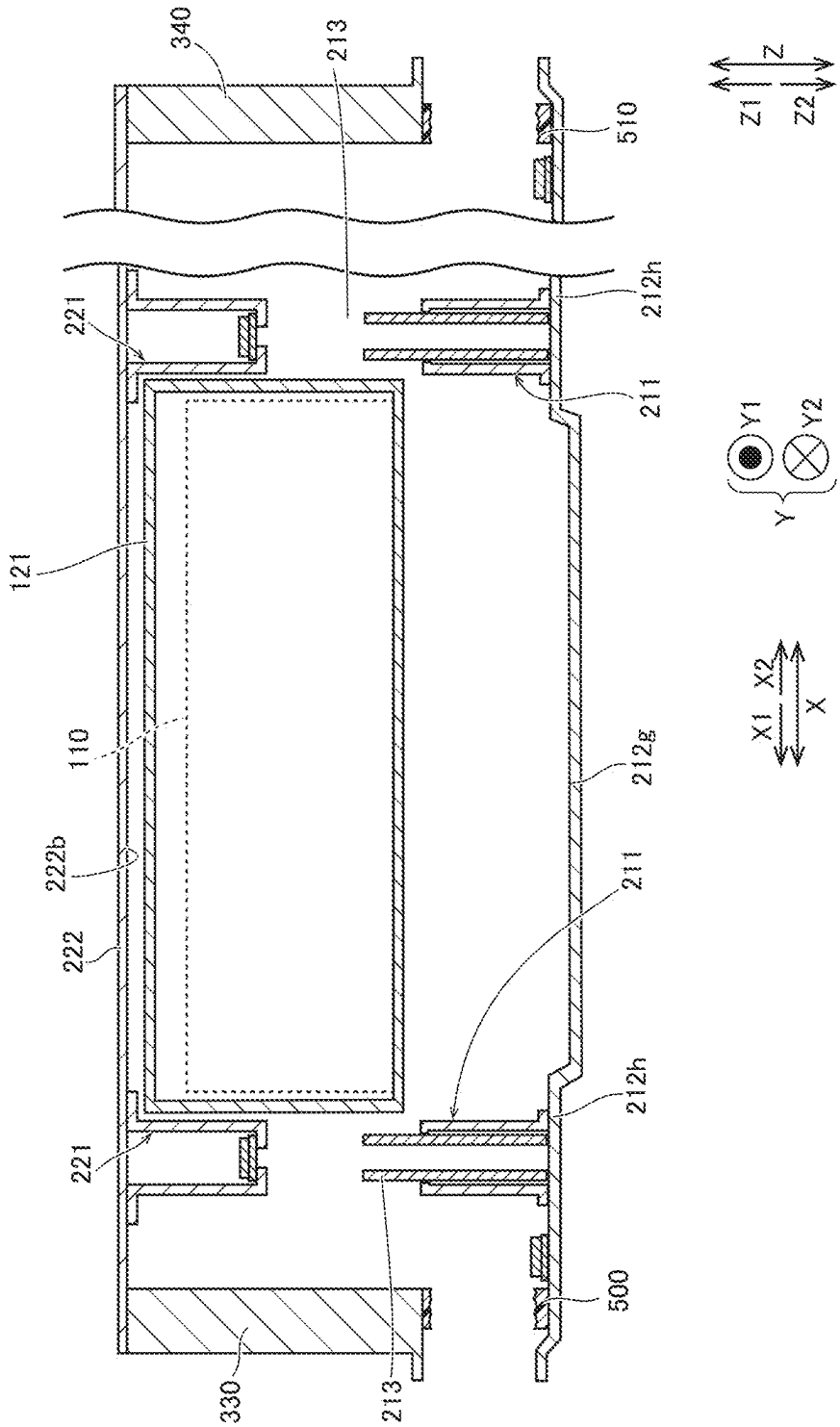
340
213
510
Z
Z1
Z2
221
212h
211
Y1
Y2
Y
121
X1
X2
X
110
212g
222b
211
222
212h
221
500
330
213

FIG.12

FIG.13

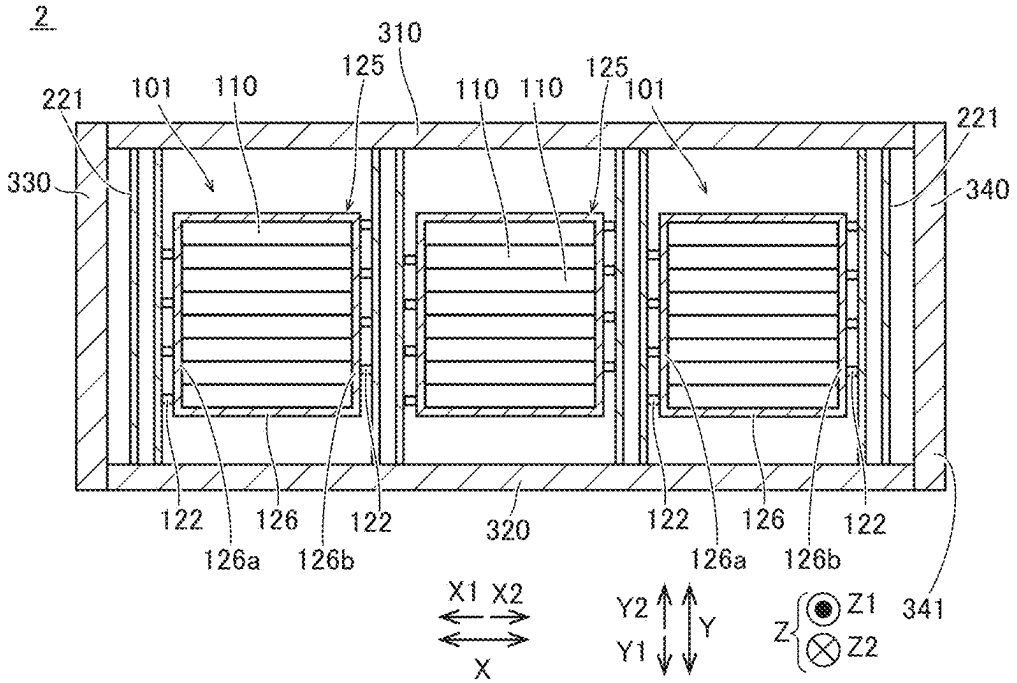
2
310
125
125
221
101
110
110
110
101
221
330
340
122
126
122
320
122
126
122
126a
126b
126a
126b
341
X1 X2
X
Y2
Y1
Y
Z
Z1
Z2

FIG.14

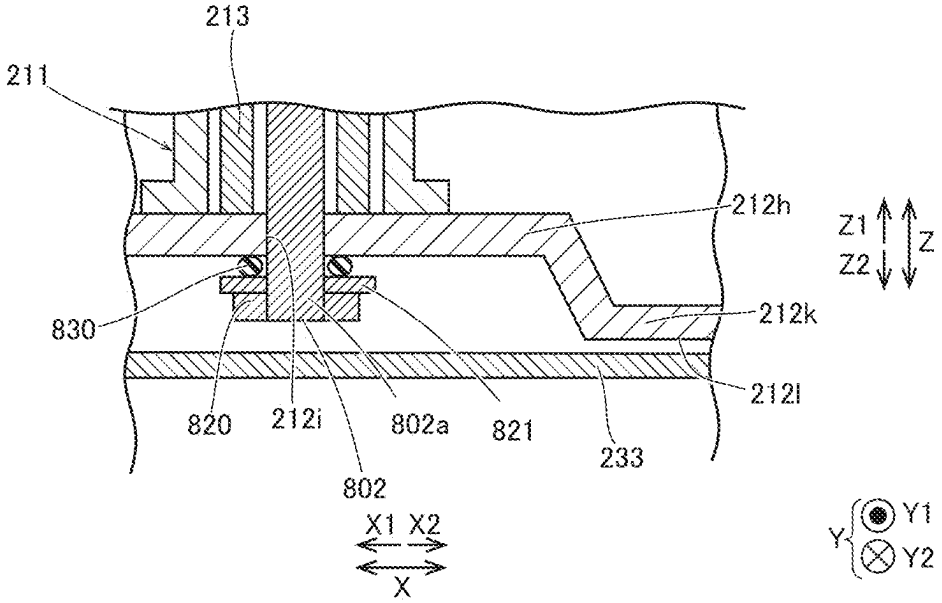
213
211
212h
Z1
Z2
Z
830
212k
212l
820
212i
802a
821
233
802
X1 X2
X
Y
Y1
Y2

# POWER STORAGE DEVICE AND VEHICLE

## CROSS REFERENCE TO RELATED APPLICATIONS

**[0001]** This nonprovisional application is based on Japanese Patent Application No. 2024-026639 filed on Feb. 26, 2024 with the Japan Patent Office, the entire content of which is hereby incorporated by reference.

## BACKGROUND

### Field

**[0002]** The present disclosure relates to a power storage device and a vehicle.

### Description of the Background Art

**[0003]** Japanese Patent Laying-Open No. 2023-046945 discloses the battery pack accommodating multiple battery modules. The battery case, which is the outer shell of the battery pack, is configured of an upper case and a lower case. The battery module is mounted on the lower case.

## SUMMARY

**[0004]** Since the battery module is mounted on the lower case as noted above, the repair of the lower case (lower cover) is poorly workable.

**[0005]** The present disclosure is made to solve the above problem, and an object of the present disclosure is to provide a power storage device whose lower cover of the case is readily removable and a vehicle.

**[0006]** A power storage device according to a first aspect of the present disclosure includes a power storage module including a plurality of power storage cells, and a case accommodating the power storage module. The case includes a first cover covering the power storage module from above and a second cover covering the power storage module from below. The power storage module is secured to the first cover. The second cover is detachably secured to the first cover. Note that "detachably securing" refers to securing objects in a manner that they are non-destructively detachable. "Non-detachably securing," in contrast, refers to securing objects in a manner that at least one of the objects is destructed when separating them from each other (e.g., the surface is delaminated).

**[0007]** In the power storage device according to the first aspect of the present disclosure, the power storage module is secured to the first cover and the second cover is detachably secured to the first cover, as noted above. Owing to this, since the power storage module remains secured to the first cover even if the second cover is removed from the first cover, the power storage module can be prevented from being removed from the first cover, together with the second cover. This allows the second cover to be readily removed from the first cover.

**[0008]** The power storage device may further include a third cover below the second cover. The second cover may have higher rigidity than the third cover. With such a configuration, the third cover can prevent the second cover from being damaged by a foreign object flew from below the power storage module. Moreover, since the second cover has higher rigidity than the third cover, the second cover can further be prevented from being damaged than when the rigidity of the second cover is less than or equal to the rigidity of the third cover.

**[0009]** The third cover may be detachably secured to the second cover from below. With such a configuration, the third cover can be removed from the second cover when the third cover is damaged, for example.

**[0010]** In the region where the case overlaps with the power storage module in the up-down direction, the distance in the up-down direction between the second cover and the third cover is less than the distance in the up-down direction between the second cover and the power storage module. With such a configuration, the height of the power storage device in the up-down direction can be reduced, as compared to when the distance in the up-down direction between the second cover and the third cover is greater than or equal to the distance in the up-down direction between the second cover and the power storage module. Moreover, since the distance in the up-down direction between the second cover and the power storage module is great, the evacuation pathway for the smoke evacuated downward from the power storage module can be readily ensured and the power storage module can be protected from the interference (the impact) from below.

**[0011]** The first cover may include: a top panel above the power storage module; and a securing unit on the top panel. The power storage module may be secured to the securing unit, and the second cover may be secured to the securing unit from below. With such a configuration, a reduced stress can be applied to the top panel, as compared to the second cover being secured directly to the top panel.

**[0012]** The securing unit may extend downward from the top panel. With such a configuration, the second cover and the securing unit below the top panel can be readily joined together.

**[0013]** The power storage device may further include: a frame member surrounding the securing unit and the power storage module; and a sealing member sealing between the frame member and the second cover. The first cover and the second cover may be secured to the frame member. The sealing member may be disposed in a vicinity where the second cover is secured to the frame member. With such a configuration, the sealing member can inhibit ingress of water or the like from between the second cover and the frame member. Note that surrounding the securing unit and the power storage module includes not only surrounding the securing unit and the power storage module circumferentially, but also sandwiching the securing unit and the power storage module in a predetermined direction. The vicinity includes not only the target location, but also near the target location.

**[0014]** The second cover may be secured to the frame member below the power storage module. With such a configuration, the second cover can be inhibited from interfering with the power storage module when the second cover is removed (demounted downward).

**[0015]** The power storage device may further include a fastener member fastening the second cover and the securing unit. The second cover may include: a cover body; and an extending ridge receding upward from the cover body. The fastener member may fasten the extending ridge and the securing unit. With such a configuration, the second cover has an increased mechanical strength, as compared to the second cover with no extending ridge. Moreover, since the

fastening point between the fastener member and the extending ridge is at the extending ridge, the fastening point can be formed upward, as compared to the second cover with no extending ridge. As a result, the fastener member can be protected from the impact of the interference from below (interfered from below).

**[0016]** The fastener member may be disposed so as to have a lower end located at the same position as or above an undersurface of the cover body in the up-down direction. With such a configuration, the fastener member can be more protected from the impact of the interference from below (interfered from below).

**[0017]** The second cover may have higher rigidity than the first cover. With such a configuration, damage to (breakage of) the second cover can be inhibited, as compared to the second cover having lower rigidity than the first cover.

**[0018]** In the region where the case overlaps with the power storage module in the up-down direction, the distance in the up-down direction between the first cover and the power storage module may be less than the distance in the up-down direction between the second cover and the power storage module. With such a configuration, the height of the power storage device in the up-down direction can be reduced, as compared to when the distance in the up-down direction between the first cover and the power storage module is greater than or equal to the distance in the up-down direction between the second cover and the power storage module. Moreover, since the distance in the up-down direction between the second cover and the power storage module is comparatively great, the evacuation pathway for the smoke evacuated downward from the power storage module can be readily ensured and the interference (the impact) can be prevented from being input to the power storage module from below.

**[0019]** A vehicle according to a second aspect of the present disclosure includes a vehicle body and the power storage device according to the first aspect secured to the bottom of the vehicle body. This can provide the vehicle whose second cover can be readily removed from the vehicle body (the power storage device).

**[0020]** The foregoing and other objects, features, aspects and advantages of the present disclosure will become more apparent from the following detailed description of the present disclosure when taken in conjunction with the accompanying drawings. The foregoing and other objects, features, aspects and advantages of the present disclosure will become more apparent from the following detailed description of the present disclosure when taken in conjunction with the accompanying drawings.

## BRIEF DESCRIPTION OF THE DRAWINGS

**[0021]** FIG. **1** is a diagram showing a configuration of a vehicle having a power storage device according to one embodiment mounted thereon.

**[0022]** FIG. **2** is a cross-sectional view of the power storage device according to the embodiment, as viewed from above.

**[0023]** FIG. **3** is a cross-sectional view of the power storage device of FIG. **2**, taken along a III-III line.

**[0024]** FIG. **4** is a schematic view showing a configuration of an upper cross.

**[0025]** FIG. **5** is an enlarged partial view of the power storage device in the vicinity of the upper cross and lower cross of FIG. **3**.

**[0026]** FIG. **6** is a cross-sectional view of the power storage device of FIG. **2**, taken along a VI-VI line.

**[0027]** FIG. **7** is an enlarged partial view of the power storage device in the vicinity of the power storage module of FIG. **2**.

**[0028]** FIG. **8** is an enlarged partial view of the power storage device in the vicinity of the upper cross and lower cross of FIG. **6**.

**[0029]** FIG. **9** is a flow diagram illustrating a method of removal of the lower cover from the power storage device according to the embodiment.

**[0030]** FIG. **10** is a cross-sectional view of the power storage device in step S**4** of FIG. **9**.

**[0031]** FIG. **11** is a cross-sectional view of the power storage device in step S**5** of FIG. **9**.

**[0032]** FIG. **12** is a cross-sectional view of the power storage device in step S**6** of FIG. **9**.

**[0033]** FIG. **13** is a cross-sectional view of a configuration of the power storage device according to Variation **1** of the embodiment, as viewed from above.

**[0034]** FIG. **14** is a partially enlarged, cross-sectional view of a configuration of the power storage device in the vicinity of the bottom of the lower cover according to Variation **2** of the embodiment.

## DESCRIPTION OF THE PREFERRED EMBODIMENTS

**[0035]** Embodiments according to the present disclosure will be described, with reference to the accompanying drawings. Referring now to the drawings wherein like numerals are used to refer to like or corresponding members.

**[0036]** FIG. **1** is a diagram showing a vehicle **10** having a power storage device **1** according to an embodiment of the present disclosure mounted thereon. Power storage device **1** is a device for storing power for driving vehicle **10**. Vehicle **10** includes, for example, a plug-in hybrid electric vehicle (PHEV), a battery electric vehicle (BEV), or a fuel cell electric vehicle (FCEV).

**[0037]** X direction, Y direction, Z direction, as used herein, are directions that are orthogonal to one another. For example, X direction and Y direction may be the front-rear direction and the left-right direction, respectively, of vehicle **10**. Z direction may be the up-down (vertical) direction. Note that Z direction is one example of a up-down direction according to the present disclosure. A Z**1** side and a Z**2** side are one example of "above" and "below," respectively, according to the present disclosure.

**[0038]** Besides power storage device **1**, vehicle **10** includes a vehicle body **11**. Vehicle body **11** has an under body **11***a*. Under body **11***a* is disposed on the lower part (the bottom) of vehicle body **11**. Power storage device **1** is disposed on under body **11***a*. Specifically, power storage device **1** is secured (fastened) to under body **11***a* below under body **11***a*. Note that under body **11***a* is one example of a "bottom" according to the present disclosure.

<Configuration of Power Storage Device>

**[0039]** Referring to FIG. **2**, power storage device **1** includes a power storage module **100**, a case **200**, and a frame **300**. Case **200** accommodates power storage module **100**. Note that frame **300** is one example of a "frame member" according to the present disclosure.

**[0040]** As shown in FIG. **2**, multiple (three, in the present embodiment) power storage modules **100** are provided in power storage device **1**. Power storage modules **100** are aligned in X direction. Note that the number of power storage modules **100** included in power storage device **1** may be other than three (e.g., one).

**[0041]** Power storage modules **100** each include multiple power storage cells **110** and a module case **120**. Note that module case **120** is formed from a metal such as aluminum, for example.

**[0042]** In each of power storage modules **100**, multiple power storage cells **110** are accommodated in module case **120**. Power storage cells **110** of each power storage module **100** are aligned (stacked) in Y direction. Power storage cells **110** each have a cuboid shape elongated in X direction. Specifically, the power storage cell **110** is formed to have the length in X direction greater than the length in Y direction and the height in Z direction. Note that each power storage cell **110** may be disposed to have the longitudinal direction in Y direction.

**[0043]** Module case **120** of each power storage module **100** includes a case body **121** and multiple (eight, in the present embodiment) connections **122**. Case body **121** has a hollow cuboid shape accommodating power storage cells **110**.

**[0044]** Connections **122** are disposed extending in X direction from case body **121**. Specifically, four of the eight connections **122** project from a side **121***a* of case body **121** to the X**1** side. The remaining four of the eight connections **122** project to the X**2** side from a side **121***b* of case body **121** on the X**2** side.

**[0045]** The four connections **122** of side **121***a* and the four connections **122** of side **121***b* are disposed at the same position in Y direction. Four connections **122** are equidistantly disposed on each of side **121***a* and side **121***b*. Note that the eight connections **122** are disposed at the same height in Z direction.

**[0046]** Power storage modules **100** that are adjacent to each other in X direction are disposed so that their orientations are rotated 180 degrees to each other in Y direction. This displaces the positions of connections **122** in Y direction between power storage modules **100** adjacent to each other in X direction.

**[0047]** Referring to FIG. **3**, case **200** includes a lower cover **210**, an upper cover **220**, and a share panel **230** (FIG. **3**). Lower cover **210**, upper cover **220**, and share panel **230** are each formed from a metal (e.g., iron). Note that upper cover **220** and lower cover **210** are one example of a "first cover" and a "second cover," respectively, according to the present disclosure. Share panel **230** is one example of a "third cover" according to the present disclosure.

**[0048]** Lower cover **210** is located on the Z**2** side of power storage modules **100** to cover power storage modules **100** from the Z**2** side. Lower cover **210** extends in X direction across power storage modules **100**.

**[0049]** Upper cover **220** includes upper crosses **221**. Upper cover **220** includes multiple (four, in the present embodiment) upper crosses **221**. Upper crosses **221** extend in Y direction. Upper crosses **221** are aligned in X direction. Specifically, upper crosses **221** are equidistantly disposed in X direction. Power storage modules **100** are each disposed between upper crosses **221** aligned in X direction. Note that upper cross **221** is one example of a "securing unit" according to the present disclosure.

**[0050]** Upper cross **221** has a Y**2**-side end **221***a* joined (e.g., welded) to a wall **310** (described below) of frame **300**. Upper cross **221** has a Y**1**-side end **221***b* joined (e.g., welded) to a wall **320** (described below) of frame **300**.

**[0051]** Upper cross **221** includes a pair of sides **221***c* and a bottom **221***d*. The pair of sides **221***c* extend in Z direction. The pair of sides **221***c* also extend in Y direction. In other words, the pair of sides **221***c* extend orthogonal to X direction. The pair of sides **221***c* are disposed opposing to each other in X direction.

**[0052]** Bottom **221***d* connects the lower ends of the pair of sides **221***c* (FIG. **3**). Bottom **221***d* extends in X direction. Bottom **221***d* also extends in Y direction. In other words, bottom **221***d* extends orthogonal to Z direction. Note that, the pair of sides **221***c* of upper cross **221** are orthogonal to bottom **221***d*.

**[0053]** A cavity extending in Y direction is formed between the pair of sides **221***c* (on the Z**1** side of bottom **221***d*). In other words, upper cross **221** has a hollow shape.

**[0054]** Frame **300**, as viewed from the Z**1** side, surrounds power storage modules **100**. In other words, frame **300** is formed in a rectangular frame shape as viewed from the Z**1** side. Frame **300** extends in Z direction. In other words, frame **300** has a hollow rectangular cylindrical shape extending in Z direction.

**[0055]** Frame **300** includes wall **310**, wall **320**, a wall **330**, and a wall **340**. Wall **310** and wall **320** extend orthogonal to Y direction. Wall **330** and wall **340** extend orthogonal to X direction.

**[0056]** Wall **310** covers power storage modules **100** and upper crosses **221** from the Y**2** side. Wall **320** covers power storage modules **100** and upper crosses **221** from the Y**1** side. Wall **310** and wall **320** extend in X direction across power storage modules **100** and upper crosses **221** that are aligned in X direction. Power storage modules **100** and upper crosses **221** are sandwiched in Y direction between wall **310** and wall **320**.

**[0057]** Wall **330** covers power storage module **100** that is the closest to the X**1** side, among power storage modules **100**, from the X**1** side. Wall **330** is disposed further away from power storage module **100** than upper cross **221** closest to the X**1** side among upper crosses **221**.

**[0058]** Wall **340** covers from the X**2** side, power storage module **100** closest to the X**2** side, among power storage modules **100**. Wall **340** is disposed further away from power storage module **100** than upper cross **221** closest to the X**2** side among upper crosses **221**.

**[0059]** Power storage modules **100** and upper crosses **221** are sandwiched in X direction between wall **330** and wall **340**.

**[0060]** Wall **310** is connected to wall **330** and wall **340**. Specifically, wall **310** has the X**1**-side end connected to the Y**2**-side end of wall **330**. Wall **310** has the X**2**-side end connected to the Y**2**-side end of wall **340**.

**[0061]** Wall **320** is connected to wall **330** and wall **340**. Specifically, wall **320** has the X**1**-side end connected to the Y**1**-side end of wall **330**. Wall **320** has the X**2**-side end connected to the Y**1**-side end of wall **340**.

**[0062]** Note that the walls **310** to **340** are joined together by welding (such as arc welding), for example.

**[0063]** Walls **310**, **320**, **330**, and **340** have an upper end surface **311**, an upper end surface **321**, an upper end surface **331**, and an upper end surface **341**, respectively. Upper end surface **311**, upper end surface **321**, upper end surface **331**,

and upper end surface **341** are provided on the upper ends of wall **310**, wall **320**, wall **330**, and wall **340**, respectively.

**[0064]** Upper end surface **311**, upper end surface **321**, upper end surface **331**, and upper end surface **341** are joined to an outer periphery **222***a* (FIG. **3**) of upper cover **220**. Upper end surface **311**, upper end surface **321**, upper end surface **331**, and upper end surface **341** are joined to outer periphery **222***a* by friction stir welding (FSW).

**[0065]** FIG. **3** is a cross-sectional view of the power storage device at a position in Y direction where connections **122** are disposed. As shown in FIG. **3**, upper cover **220** covers power storage modules **100** from the Z**2** side. Specifically, upper cover **220** includes a top panel **222** located on the Z**1** side of power storage modules **100**. Top panel **222** extends in X direction across power storage modules **100**. A portion (an end in X direction) of top panel **222** projects in X direction to the X**1** side and the X**2** side from the region where power storage modules **100** are disposed. Top panel **222** extends orthogonal to Z direction.

**[0066]** Upper crosses **221** are disposed on top panel **222**. Specifically, upper crosses **221** are secured to the power storage module **100**-side (the Z**2**-side) surface **222***b* of top panel **222** by welding, for example.

**[0067]** Upper crosses **221** extend downward from top panel **222**.

**[0068]** Upper crosses **221** include a pair of upper ends **221***e* which are secured to surface **222***b* of top panel **222**. One of the pair of upper ends **221***e* is connected to one of the pair of sides **221***c*. The other one of the pair of upper ends **221***e* is connected to the other one of the pair of sides **221***c*. Side **221***c* and upper end **221***e* connected to each other are orthogonal to each other. The pair of upper ends **221***e* extends in directions away from each other, from points of connection with side **221***c*. The pair of upper ends **221***e* also extend in Y direction (FIG. **4**). In other words, the pair of upper ends **221***e* extend orthogonal to Z direction. Note that upper cross **221** has a downwardly convex shape (a hat shape).

**[0069]** The pair of upper ends **221***e* are each integrally formed with side **221***c*. The pair of sides **221***c* are each integrally formed with bottom **221***d*. In other words, upper cross **221** is formed by one metal plate being folded several times. This enhances the rigidity of upper cross **221** greater than the rigidity of top panel **222**.

**[0070]** Here, in a conventional power storage device, since the power storage modules are disposed (mounted) on the lower cover, removal of the lower cover for repair requires removal of the power storage modules.

**[0071]** Thus, in the present embodiment, power storage modules **100** are secured to upper cover **220**. This allows power storage modules **100** to be held by upper cover **220** even when lower cover **210** is removed.

**[0072]** Specifically, connections **122** of module case **120** are secured to upper cross **221**. Connections **122** are secured from below to bottom **221***d* of upper cross **221**. Specifically, bottom **221***d* of upper cross **221** and connections **122** of module case **120** are fastened by bolts **400**.

**[0073]** Lower cover **210** includes multiple lower crosses **211** and a bottom plate **212**. Bottom plate **212** is located on the Z**2** side of power storage modules **100**. Bottom plate **212** covers power storage modules **100** from the Z**2** side. Bottom plate **212** extends in X direction across power storage modules **100**. A portion (an end in X direction) of bottom plate **212** projects in X direction to the X**1** side and the X**2** side from the region where power storage modules **100** are disposed.

**[0074]** Lower crosses **211** are disposed on bottom plate **212**. Specifically, lower crosses **211** are secured to a power storage module **100**-side (Z**1**-side) surface **212***a* of bottom plate **212** by welding, for example. Lower cross **211** extends from bottom plate **212** to the Z**1** side. Note that while bottom plate **212** includes a bottom **212***g* and an extending ridge **212***h* (FIG. **6**) described below, the cross section shown in FIG. **3** does not show extending ridge **212***h*, showing only bottom **212***g*. Accordingly, bottom plate **212** in the description with respect to FIG. **3** refers to bottom **212***g*.

**[0075]** Lower cross **211** has a similar shape to upper cross **221**. Lower cross **211** has a shape of a vertically inverted upper cross **221**. In other words, lower cross **211** has a shape bulging upward (a hat shape).

**[0076]** Specifically, lower cross **211** has a pair of sides **211***c* corresponding to the pair of sides **221***c* of upper cross **221**. Lower cross **211** has an upper surface **211***d* corresponding to bottom **221***d* of upper cross **221**. Lower cross **211** has a pair of lower ends **211** corresponding to the pair of upper ends **221***e* of upper cross **221**.

**[0077]** Specifically, the pair of sides **211***c* extend in Z direction. The pair of sides **211***c* extend in Y direction. In other words, the pair of sides **211***c* extend orthogonal to X direction. The pair of sides **211***c* oppose to each other in X direction.

**[0078]** Upper surface **211***d* connects the top ends of the pair of sides **211***c* (FIG. **3**). Upper surface **211***d* extends in X direction. Upper surface **211***d* also extends in Y direction. In other words, upper surface **211***d* extends in a direction orthogonal to Z direction. Note that, in lower cross **211**, the pair of sides **211***c* are orthogonal to upper surface **211***d*.

**[0079]** A cavity extending in Y direction is formed between the pair of sides **211***c* (on the Z**2** side of upper surface **211***d*). In other words, lower cross **211** has a hollow shape.

**[0080]** The pair of lower ends **211***e* are secured to surface **212***a* of bottom plate **212**. One of the pair of lower ends **211***e* is connected to one of the pair of sides **211***c*. The other one of the pair of lower ends **211***e* is connected to the other one of the pair of sides **211***c*. Side **211***c* and lower end **211***e* connected to each other are orthogonal to each other. The pair of lower ends **211***e* extend in directions away from each other, from points of connection with side **211***c*.

**[0081]** The pair of lower ends **211***e* are each integrally formed with side **211***c*. The pair of sides **211***c* are each integrally formed with upper surface **211***d*. In other words, as with upper cross **221**, lower cross **211** is formed by one metal plate being folded several times.

**[0082]** Lower crosses **211** overlap upper crosses **221** in Z direction. In other words, lower crosses **211** are disposed below the four upper crosses **221**.

**[0083]** In the region where case **200** overlaps with the multiple power storage modules **100** in the up-down direction, a distance D**1** in Z direction between upper cover **220** (top panel **222**) and power storage modules **100** is less than a distance D**2** in Z direction between lower cover **210** (bottom plate **212**) and power storage modules **100**.

**[0084]** Note that power storage module **100** is configured to evacuate smoke to the Z**2** side. In other words, the space from which smoke is evacuated (a space in power storage

module **100** on the Z**2** side) is greater than an opposing space (a space in power storage module **100** on the Z**1** side).

**[0085]** Upper cross **221** has a length L**1** in Z direction. Lower cross **211** has a length L**2** in Z direction. Length L**2** is less than length L**1**. This reduces the size of lower cover **210**, thereby enabling lower cover **210** to be readily exchanged. Note that length L**2** may be greater than or equal to length L**1**.

**[0086]** Power storage device **1** includes a sealing member **500** and a sealing member **510**. Sealing member **500** is provided separately from sealing member **510**. Sealing members **500** and **510** may be, for example, urethane seals. Sealing members **500** and **510** may have adhesion properties.

**[0087]** Sealing member **500** is disposed to seal a gap between a lower end **332** of wall **330** and an X**1**-side portion **212***c* of bottom plate **212** of lower cover **210** in the vicinity of an outer periphery **212***b*. Note that, while not shown, sealing member **500** extends in Y direction along wall **330**.

**[0088]** Sealing member **510** is disposed to seal a gap between a lower end **342** of wall **340** and an X**2**--side portion **212***e* of bottom plate **212** of lower cover **210** in the vicinity of an outer periphery **212***d*. Note that, while not shown, sealing member **510** extends in Y direction along wall **340**.

**[0089]** Sealing members **500** and **510** allow bottom plate **212** of lower cover **210** to be adhered (secured) to walls **330** and **340**. Note that sealing members may also be provided between bottom plate **212** and wall **310** and between bottom plate **212** and wall **320**.

**[0090]** Power storage device **1** includes a rivet **600** and a rivet **610**. Rivet **600** secures lower end **332** of wall **330** and outer periphery **212***b* of lower cover **210**. In other words, sealing member **500** is disposed in the vicinity where lower end **332** and outer periphery **212***b* are secured by rivet **600**. Rivet **600** is disposed on the X**1** side of sealing member **500** (opposite the power storage module **100** relative to sealing member **500**). Note that multiple rivets **600** may be alighted in Y direction along wall **330**.

**[0091]** Rivet **610** secures lower end **342** of wall **340** and outer periphery **212***d* of lower cover **210**. In other words, sealing member **510** is disposed in the vicinity where lower end **342** and outer periphery **212***d* are secured by rivet **610**. Rivet **610** is disposed on the X**2** side of sealing member **510** (opposite the power storage module **100** relative to sealing member **510**). Note that multiple rivets **610** may be alighted in Y direction along wall **340**.

**[0092]** Bottom plate **212** of lower cover **210** is secured to wall **330** and wall **340** on the Z**2** side of power storage modules **100**. In other words, outer peripheries **212***b* and **212***d* of bottom plate **212** are located on the Z**2** side of the bottom **123** of module case **120**. Note that the bottom **123** is the Z**2** side end of module case **120**.

**[0093]** Portions **212***c* and **212***e* of bottom plate **212** are also located on the Z**2** side of the bottom **123** of module case **120**.

**[0094]** Outer peripheries **212***b* and **212***d* are disposed on the Z**1** side of portions **212***c* and **212***e*. In other words, a step is formed between outer periphery **212***b* and portion **212***c* and between outer periphery **212***d* and portion **212***e*. Note that outer peripheries **212***b* and **212***d* may be disposed at the same location as the portions **212***c* and **212***e* in Z direction or disposed at on the Z**2** side of portions **212***c* and **212***e* in Z direction.

**[0095]** Share panel **230** is disposed below lower cover **210**. Share panel **230** covers bottom plate **212** of lower cover **210** from below.

**[0096]** Share panel **230** is detachably secured to lower cover **210** from the Z**2** side. Specifically, share panel **230** is fastened to bottom plate **212** of lower cover **210** with bolts **700**. Bolts **700** fasten bottom plate **212** to an X**1**-side end **231** of share panel **230** and an X**2**-side end **232** of share panel **230**. Note that multiple bolts **700** may be alighted in Y direction at each of end **231** and end **232**. Note that "detachably securing" refers to securing objects in a manner that they are non-destructively detachable. "Non-detachably securing," in contrast, refers to securing (e.g., securing by welding) objects in a manner that at least one of the objects is destructed when separating them from each other (e.g., the surface is delaminated).

**[0097]** Note that "detachably securing" refers to securing objects in a manner that they are non-destructively detachable. For example, objects, while they are adhered to each other with an adhesive, can be detached from each other by fracturing the adhered portion. Thus, the adhering corresponds to "detachably securing." Securing objects by fastener member with bolts and nuts can also detach the objects from each other by loosening the bolts and nuts. Thus, fastening with bolts and nuts corresponds to "detachably securing."

**[0098]** "Non-detachably securing," in contrast, refers to securing objects in a manner that at least one of the objects is destructed when separating them from each other (e.g., the surface is delaminated) (e.g., securing by welding). Note that welded portion has continuity at molecular level of the metal members welded together, and is significantly different from "detachably securing" noted above.

**[0099]** Bolts **700** are provided on the X**1** side of lower cross **211** closest to the X**1** side, among lower crosses **211**, and on the X**2** side of lower cross **211** closest to the X**2** side, among lower crosses **211**.

**[0100]** Share panel **230** includes a concave portion **233**. Concave portion **233** is connected to ends **231** and **232**. Concave portion **233** is disposed between ends **231** and **232** in X direction. Concave portion **233** is formed to project inwardly (recede) to the Z**2** side from ends **231** and **232**.

**[0101]** In the region where case **200** overlaps with power storage module **100** in Z direction, a distance D**3** in Z direction between bottom plate **212** of lower cover **210** and concave portion **233** of share panel **230** is less than distance D**2** in Z direction between bottom plate **212** and power storage module **100**. For example, distance D**3** may be half the distance D**2** or less.

**[0102]** FIG. **5** is an enlarged partial view of the power storage device in the vicinity of wall **330** of FIG. **3**. Note that the wall **340** side has the same configuration as that of FIG. **5**, and the description thereof will, thus, not be repeated.

**[0103]** A through-hole **122***a*, through which the bolt **400** passes in Z direction, is formed in connection **122**. A through-hole **221***f*, through which the bolt **400** passes in Z direction, is formed in bottom **221***d* of upper cross **221**. Through-holes **122***a* and **221***f* overlap in Z direction.

**[0104]** Bolt **400** is fastened to a nut **410** and a nut **420**. Nut **410** is fastened to a portion **401***a* of bolt **400** in the vicinity of a Z**1**-side end **401** of bolt **400**. Nut **410** is secured (welded) to bottom **221***d* of upper cross **221** from the Z**1** side. Note that a washer **411** is disposed between nut **410** and bottom **221***d*.

**[0105]** Nut **420** is fastened to a portion **402***a* of bolt **400** in the vicinity of a Z2-side end **402** of bolt **400**. Nut **420** is secured to connection **122** from the Z2 side. Note that a washer **421** is disposed between nut **420** and connection **122**.

**[0106]** A through-hole **231***a*, through which the bolt **700** passes in Z direction, is formed in end **231** of share panel **230**. A through-hole **212***f*, through which the bolt **700** passes in Z direction, is formed in bottom plate **212** of lower cover **210**. Through-holes **231***a* and **212***f* overlap in Z direction.

**[0107]** Bolt **700** is fastened to a nut **710** and a nut **720**. Nut **710** is fastened to a portion **701***a* of bolt **700** in the vicinity of a Z1-side end **701**. Nut **710** is secured (welded) to surface **212***a* of bottom plate **212**. Note that a washer **711** is disposed between nut **710** and surface **212***a*.

**[0108]** Nut **720** is fastened to a portion **702***a* of bolt **700** in the vicinity of the Z2-side end **702** of bolt **700**. Nut **720** is secured to end **231** of share panel **230** from the Z2 side. Note that a washer **721** is disposed between nut **720** and end **231**.

**[0109]** In the present embodiment, lower cover **210** (bottom plate **212**) has greater rigidity than share panel **230**. Specifically, a thickness t**1** of bottom plate **212** in Z direction is greater than a thickness t**2** of share panel **230** in Z direction. Note that the rigidity may include flexural rigidity, for example.

**[0110]** Lower cover **210** (bottom plate **212**) has greater rigidity than upper cover **220** (top panel **222**). Specifically, thickness t**1** of bottom plate **212** in Z direction is greater than a thickness t**3** of top panel **222** in Z direction.

**[0111]** FIG. **6** is a cross-sectional view of the power storage device at a position in Y direction different from FIG. **3**. Specifically, FIG. **6** is a cross-sectional view of the power storage device at a position in Y direction where connections **122** are not provided.

**[0112]** As shown in FIG. **6**, lower cover **210** is detachably secured to upper cover **220**. Specifically, lower cover **210** is secured to upper cross **221** from the Z2 side.

**[0113]** Power storage device **1** includes bolts **800**. Bolts **800** fasten bottom plate **212** of lower cover **210** and upper cross **221** (bottom **221***d*). In other words, bottom plate **212** is indirectly secured to top panel **222** with bolts **800**. Note that bolt **800** is one example of a "fastener member" according to the present disclosure.

**[0114]** Lower cover **210** is provided with a collar member **213**. Collar member **213** extends in Z direction to guide bolt **800** from bottom plate **212** of lower cover **210** to upper cross **221**. Collar member **213** is secured to bottom plate **212** (surface **212***a*) from the Z1 side by welding, for example.

**[0115]** Bottom plate **212** of lower cover **210** includes a bottom **212***g* and an extending ridge **212***h*. Bolt **800** fastens extending ridge **212***h* and upper cross **221**. Note that bottom **212***g* is one example of a "cover body" according to the present disclosure.

**[0116]** Extending ridge **212***h* is formed to recede upward from bottom **212***g*. In other words, a step is formed between extending ridge **212***h* and bottom **212***g*. In the cross section shown in FIG. **6**, bottom **212***g* is disposed between extending ridges **212***h* in X direction.

**[0117]** Note that, as shown in FIG. **7**, connections **122** of power storage module **100** and extending ridges **212***h* of lower cover **210** are alternately disposed in Y direction. Multiple extending ridges **212***h* are aligned in Y direction Extending ridges **212***h* are arranged equidistantly in Y direction on the Z2 side of lower cross **211**.

**[0118]** FIG. **8** is an enlarged partial view of the power storage device in the vicinity of wall **330** of FIG. **6**. Note that the wall **340** side has the same configuration as that of FIG. **8**, and the description thereof will, thus, not be repeated.

**[0119]** A through-hole **221***g*, through which the bolt **800** passes in Z direction, is formed in bottom **221***d* of upper cross **221**.

**[0120]** A through-hole **212***i*, through which the bolt **800** passes in Z direction, is formed in extending ridge **212***h* of lower cover **210**.

**[0121]** A through-hole **211***f*, through which the bolt **800** passes in Z direction, is formed in upper surface **211***d* of lower cross **211**.

**[0122]** Through-holes **221***g*, **212***i*, and **211***f* overlap in Z direction. Bolt **800** passes through through-holes **221***g*, **212***i*, and **211***f*, thereby extending from the Z2 side of extending ridge **212***h* to the Z1 side of bottom **221***d* of upper cross **221**.

**[0123]** Bolt **800** is fastened to nut **810** and nut **820**. Nut **810** is fastened to a portion **801***a* of bolt **800** in the vicinity of a Z1-side end **801** of bolt **800**. Nut **810** is secured (welded) to bottom **221***d* of upper cross **221** from the Z1 side. Note that a washer **811** is disposed between nut **810** and bottom **221***d*. Note that nut **820** is one example of a "fastener member" according to the present disclosure.

**[0124]** Nut **820** is fastened to a portion **802***a* of bolt **800** in the vicinity of a Z2-side end **802** of bolt **800**. Nut **820** is secured to extending ridge **212***h* from the Z2 side. Note that a washer **821** is disposed between nut **820** and extending ridge **212***h*. Washer **821** is one example of a "fastener member" according to the present disclosure.

**[0125]** Note that nut **820** and washer **821** are accommodated in a space formed between bottom plate **212** of lower cover **210** and share panel **230**.

**[0126]** An annular sealing member **830** (e.g., rubber, etc.) is disposed between washer **821** and extending ridge **212***h*. Sealing member **830** is sandwiched between washer **821** and extending ridge **212***h* in Z direction. Bolt **800** passes through sealing member **830**.

**[0127]** End **802** of bolt **800** is disposed at the same position in Z direction as an undersurface **212***j* of bottom **212***g* of lower cover **210**. Note that, in the present embodiment, end **802** of bolt **800** is disposed at the same position in Z direction as the undersurface (no reference sign attached) of nut **820**.

**[0128]** Collar member **213** has a through-hole **213***a* through which the bolt **800** passes in Z direction. Collar member **213** extends in Z direction. For example, collar member **213** has a cylindrical shape. Note that the shape of collar member **213** may be other than the cylindrical shape (e.g., a rectangular cylindrical shape). Collar member **213** is configured of a metal such as aluminum. Note that collar member **213** may be formed of a resin, for example.

**[0129]** A lower end **213***b* of collar member **213** is in contact with extending ridge **212***h* of lower cover **210**. An upper end **213***c* of collar member **213** is in contact with bottom **221***d* of upper cross **221**. Collar member **213** extends from extending ridge **212***h* of lower cover **210** to bottom **221***d* of upper cross **221**, passing through through-hole **211***f* in upper surface **211***d* of lower cross **211**.

**[0130]** Collar member **213** is disposed to guide (protect) bolt **800**. This can suppress bolt **800** and power storage module **100** from being brought into contact due to vibrations.

**[0131]** Moreover, since lower end **213***b* of collar member **213** is in contact with extending ridge **212***h* of lower cover **210**, a force that is applied to extending ridge **212***h* due to the impact from below can be distributed to lower cross **211** and collar member **213**. This can reduce the stress applied to a contact surface between lower cross **211** and extending ridge **212***h*, as compared to lower cover **210** without collar member **213**. For example, this can suppress the portion of extending ridge **212***h* below the lower cross **211** from receding (depressing) upward.

**[0132]** Upper surface **211***d* of lower cross **211** and an outer periphery **213***d* of collar member **213** are joined together by arc welding, for example. Specifically, a Z**1**-side surface **211***g* of upper surface **211***d* of lower cross **211** and outer periphery **213***d* of collar member **213** are welded. A welded portion **211***h* at which the surface **211***g* and outer periphery **213***d* are welded may be formed in an annular shape surrounding collar member **213** as viewed from the Z**1** side.

<Method of Removal of Lower Cover>

**[0133]** Next, referring to FIG. **9**, an example of a method of removal of lower cover **210** is now described. In step S**1**, bolts **700** fastening share panel **230** and lower cover **210** (bottom plate **212**) are removed. In step S**2**, share panel **230** is removed (dismounted) from lower cover **210**. In step S**3**, rivets **600** and **610** fastening frame **300** and lower cover **210** are removed. In step S**4**, sealing members **500** and **510** are cut by a cutter or the like. In step S**5**, bolts **800** fastening upper cross **221** and lower cover **210** (bottom plate **212**) are removed. In step S**6**, lower cover **210** is removed (dismounted) from upper cover **220** (upper cross **221**). This removes lower cover **210**, while power storage module **100** is being held by upper cover **220**.

**[0134]** FIG. **10** is a diagram showing step S**4** of FIG. **9**. In FIG. **10**, sealing members **500** and **510** are each divided into two in the up-down direction by a cutter **900**.

**[0135]** FIG. **11** is a diagram showing step S**5** of FIG. **9**. In this step, bolts **800** are unscrewed from collar members **213** from below.

**[0136]** FIG. **12** is a diagram showing step S**6** of FIG. **9**. In this step, lower cover **210** (bottom plate **212**, lower cross **211**) is moved downward.

**[0137]** As described above, in the present embodiment, power storage module **100** is secured to upper cover **220**, and lower cover **210** is detachably secured to upper cover **220**. This allows power storage module **100** to be held by upper cover **220**, thereby preventing power storage module **100** from being dismounted from vehicle **10** when lower cover **210** is removed from upper cover **220**. As a result, lower cover **210** can be readily removed. Moreover, this allows repairing or exchanging of lower cover **210**, without requiring dismounting of power storage module **100** from vehicle **10**.

**[0138]** Moreover, in the present embodiment, in the region where case **200** overlaps with power storage module **100** in Z direction, distance D**3** in Z direction between lower cover **210** and share panel **230** is less than distance D**2** in Z direction between lower cover **210** and power storage module **100**. This can readily allow an increased space between lower cover **210** and power storage module **100**, allowing the space for evacuating smoke out of power storage module **100** and the space for absorbing the impact from below to be common. As a result, as compared to providing these two spaces separately, vehicle **10** can have improved space efficiency.

**[0139]** In the above embodiment, the positions of connections **122** in Y direction on side **121***a* of upper cross **221** and the positions of connections **122** in Y direction on side **121***b* of upper cross **221** are the same. However, the present disclosure is not limited thereto. These positions may be different from each other.

**[0140]** In the example of FIG. **13**, power storage device **2** includes multiple power storage modules **101**. Power storage modules **101** each include a cell case **125** accommodating power storage cells **110**. Cell case **125** has a case body **126** and eight connections **122**. Four of the eight connections **122** project from the X**1**-side side **126***a* of case body **126** to the X**1** side. The remaining four of the eight connections **122** project from the X**2**-side side **126***b* of case body **126** to the X**2** side.

**[0141]** The four connections **122** of side **126***a* and the four connections **122** of side **126***b* are disposed at different locations (coordinates) in Y direction. In other words, the four connections **122** on side **126***a* are not disposed at the same positions in Y direction with the four connections **122** on side **126***b*.

**[0142]** With this configuration, unlike the above embodiments, power storage modules **101** have the same orientation in Y direction. This prevents the contact between connections **122** between power storage modules **101** that are adjacent to each other in X direction.

**[0143]** In the above embodiment, lower cover **210** (bottom plate **212**) is fastened to upper cover **220** (upper cross **221**) with bolts **800**. However, the present disclosure is not limited thereto. The lower cover may be secured to the upper cover with adhesives. For example, in a configuration where the outer periphery of the bottom plate of the lower cover and the outer periphery of the top panel of the upper cover are disposed adjacent to each other in Z direction, the outer peripheries may be adhered to each other with adhesives. Alternatively, the upper cross may be formed to extend to the bottom of the lower cover plate, and the upper cross and the bottom plate may be adhered to each other with adhesives. Alternatively, bottom plate **212** of lower cover **210** and top panel **222** of upper cover **220** may be fastened with bolts.

**[0144]** In the above embodiment, power storage module **100** (connections **122**) and upper cover **220** (upper cross **221**) are fastened by bolts **400**. However, the present disclosure is not limited thereto. Connections **122** may be secured to upper cross **221** with adhesives. Moreover, power storage modules **100** may be secured to top panel **222** of upper cover **220**. In this case, the upper cover may not be provided with upper cross **221**.

**[0145]** In the above embodiment, power storage device **1** is provided with share panel **230**. However, the present disclosure is not limited thereto. The power storage device may not be provided with share panel **230**. In this case, a coating may be applied to the undersurface of bottom plate **212** of lower cover **210**.

**[0146]** In the above embodiment, thickness t**1** of lower cover **210** (bottom plate **212**) is greater than thickness t**2** of share panel **230**, and lower cover **210** (bottom plate **212**), thereby, has higher rigidity than share panel **230**. However, the present disclosure is not limited thereto. The lower cover may be formed of a material that has higher rigidity than the share panel. Moreover, beads may be formed on the lower

cover to provide rigidity to the lower cover higher than the rigidity of the share panel. Moreover, the rigidity of the lower cover and the rigidity of the upper cover may be the same as these variations.

**[0147]** In the above embodiment, share panel **230** is detachably secured to lower cover **210**. However, the present disclosure is not limited thereto. Share panel **230** may be non-detachably secured to lower cover **210** by welding, for example.

**[0148]** In the above embodiment, upper cross **221** extends downward from top panel **222**. However, the present disclosure is not limited thereto. The upper cross may not extend downward from top panel **222**. For example, the lower end of the upper cross may be located above the power storage module.

**[0149]** Lower cover **210** (bottom plate **212**) and frame **300** (wall **330** and wall **340**) are secured below the power storage modules **100**. However, the present disclosure is not limited thereto. Lower cover **210** (bottom plate **212**) and frame **300** (wall **330** and wall **340**) may be secured at the same position as or above the bottom **123** of power storage module **100** in Z direction.

**[0150]** In the above embodiment, ends **802** of bolts **800** are disposed at the same position in Z direction as the undersurface **212***j* (FIG. **8**) of bottom **212***g* of lower cover **210**. However, the present disclosure is not limited thereto. As shown in FIG. **14**, ends **802** may be located above an undersurface **212***l* of a bottom **212***k*. Note that bottom **212***k* and undersurface **212***l* are one example of a "cover body" and an "undersurface," respectively, according to the present disclosure.

**[0151]** In the above embodiment, multiple extending ridges **212***h* are aligned in Y direction (FIG. **7**). However, the present disclosure is not limited thereto. A single extending ridge may extend in Y direction below the lower cross **211**. For example, the extending ridges may extend from the Y**1**-side end of lower cross **211** to the Y**2**-side end of the lower cross **211** in Y direction.

**[0152]** In the above embodiment, power storage device **1** is disposed on under body **11***a* of vehicle **10**. However, the present disclosure is not limited thereto. Power storage device **1** may be disposed on the bottom of an electrical equipment (e.g., a stationary power storage device), other than the vehicle.

**[0153]** In the above embodiment, lower cover **210** (bottom plate **212**) and frame **300** (the walls **330** and **340**) are secured by sealing member **500** (**510**) and rivet **600** (**610**). However, the present disclosure is not limited thereto. For example, the sealing members may not have adhesion properties, and lower cover **210** and frame **300** may be secured with fastener members only. In this case, the sealing members may be provided in the vicinities of (adjacent to) the fastener members.

**[0154]** In the above embodiment, frame **300** is configured of four walls (**310**, **320**, **330**, and **340**). However, the present disclosure is not limited thereto. For example, the frame may be formed of a single plate-like member having a frame shape. Moreover, two L-shape plate-like members may be combined.

**[0155]** Note that the above embodiment and various variations thereof may be combined.

Reference Example

**[0156]** The above embodiment and various variations thereof illustrate the lower cover as being detachably secured to the upper cover. In contrast, it is contemplated that the lower cover is detachably secured to the power storage module. Even in this case, the lower cover can be removed, without removing the power storage modules.

**[0157]** While the embodiment and variations thereof according to the present disclosure has been described above, the presently disclosed embodiment should be considered in all aspects illustrative and not restrictive. The scope of the present disclosure is defined by the appended claims. All changes which come within the meaning and range of equivalency of the appended claims are to be embraced within their scope.

What is claimed is:

**1**. A power storage device, comprising:

a power storage module including a plurality of power storage cells; and

a case accommodating the power storage module, wherein

the case includes:

a first cover covering the power storage module from above; and

a second cover covering the power storage module from below, wherein

the power storage module is secured to the first cover, and

the second cover is detachably secured to the first cover.

**2**. The power storage device according to claim **1**, further comprising

a third cover below the second cover, wherein

the second cover has higher rigidity than the third cover.

**3**. The power storage device according to claim **2**, wherein

the third cover is detachably secured to the second cover from below.

**4**. The power storage device according to claim **2**, wherein

in a region where the case overlaps with the power storage module in an up-down direction, a distance in the up-down direction between the second cover and the third cover is less than a distance in the up-down direction between the second cover and the power storage module.

**5**. The power storage device according to claim **1**, wherein

the first cover includes:

a top panel above the power storage module; and

a securing unit on the top panel, wherein

the power storage module is secured to the securing unit, and

the second cover is secured to the securing unit from below.

**6**. The power storage device according to claim **5**, wherein

the securing unit extends downward from the top panel.

**7**. The power storage device according to claim **5**, further comprising:

a frame member surrounding the securing unit and the power storage module; and

a sealing member sealing between the frame member and the second cover, wherein

the first cover and the second cover are secured to the frame member, and

the sealing member is disposed in a vicinity where the second cover is secured to the frame member.

**8**. The power storage device according to claim **7**, wherein the second cover is secured to the frame member below the power storage module.

**9**. The power storage device according to claim **5**, further comprising

a fastener member fastening the second cover and the securing unit, wherein

the second cover includes:

a cover body; and

an extending ridge receding upward from the cover body, wherein

the fastener member fastens the extending ridge and the securing unit.

**10**. The power storage device according to claim **9**, wherein

the fastener member is disposed so as to have a lower end located at the same position as or above an undersurface of the cover body in the up-down direction.

**11**. The power storage device according to claim **1**, wherein

the second cover has higher rigidity than the first cover.

**12**. The power storage device according to claim **1**, wherein

in a region where the case overlaps with the power storage module in an up-down direction, a distance in the up-down direction between the first cover and the power storage module is less than a distance in the up-down direction between the second cover and the power storage module.

**13**. A vehicle, comprising:

a vehicle body; and

the power storage device according to claim **1** secured to a bottom of the vehicle body.

* * * * *