US 20250273780A1

(19) United States
(12) Patent Application Publication
OKUHATA
(10) Pub. No.: US 2025/0273780 A1
(43) Pub. Date: Aug. 28, 2025

(54) **METHOD FOR MANUFACTURING A POWER STORAGE DEVICE**

(71) Applicant: **Prime Planet Energy & Solutions, Inc.**, Tokyo (JP)

(72) Inventor: **Yusuke OKUHATA**, Toyota-shi (JP)

(21) Appl. No.: **19/015,633**

(22) Filed: **Jan. 10, 2025**

(30) **Foreign Application Priority Data**

Feb. 27, 2024 (JP) 2024-027820

Publication Classification

(51) **Int. Cl.**

H01M 50/169	(2021.01)
H01M 10/0587	(2010.01)
H01M 50/102	(2021.01)
H01M 50/119	(2021.01)
H01M 50/148	(2021.01)
H01M 50/159	(2021.01)

(52) **U.S. Cl.**

CPC ***H01M 50/169*** (2021.01); ***H01M 10/0587*** (2013.01); ***H01M 50/119*** (2021.01); ***H01M 50/159*** (2021.01); *H01M 50/102* (2021.01); *H01M 50/148* (2021.01)

(57) **ABSTRACT**

A method for manufacturing a power storage device, in which an outer circumferential edge portion of a lid and an opening portion of a case body are welded via a melted-solidified portion, includes: a placing step of placing the lid in an unmelted opening portion of the case body; a welding step of welding the outer circumferential edge portion **36** of the lid **33** and the opening portion of the case body over their entire circumference. In the placing step, the unmelted opening portion of the case body is placed on a lower side more than a circumferential edge upper surface of the unmelted outer circumferential edge portion of the lid. In the welding step, laser welding is performed by irradiating a multi-beam of a beamlet pattern that provides more heat input to the unmelted opening portion compared to the unmelted outer circumferential edge portion.

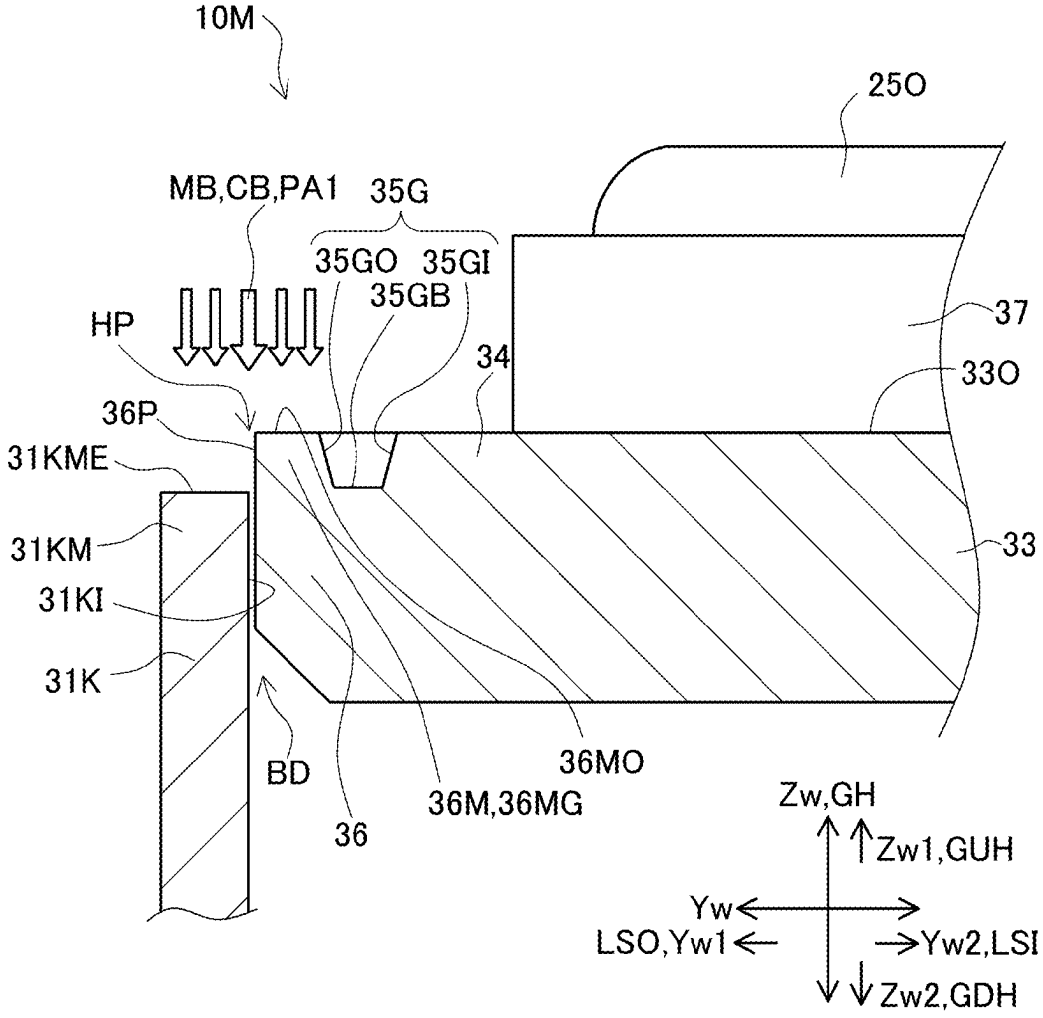

FIG. 1

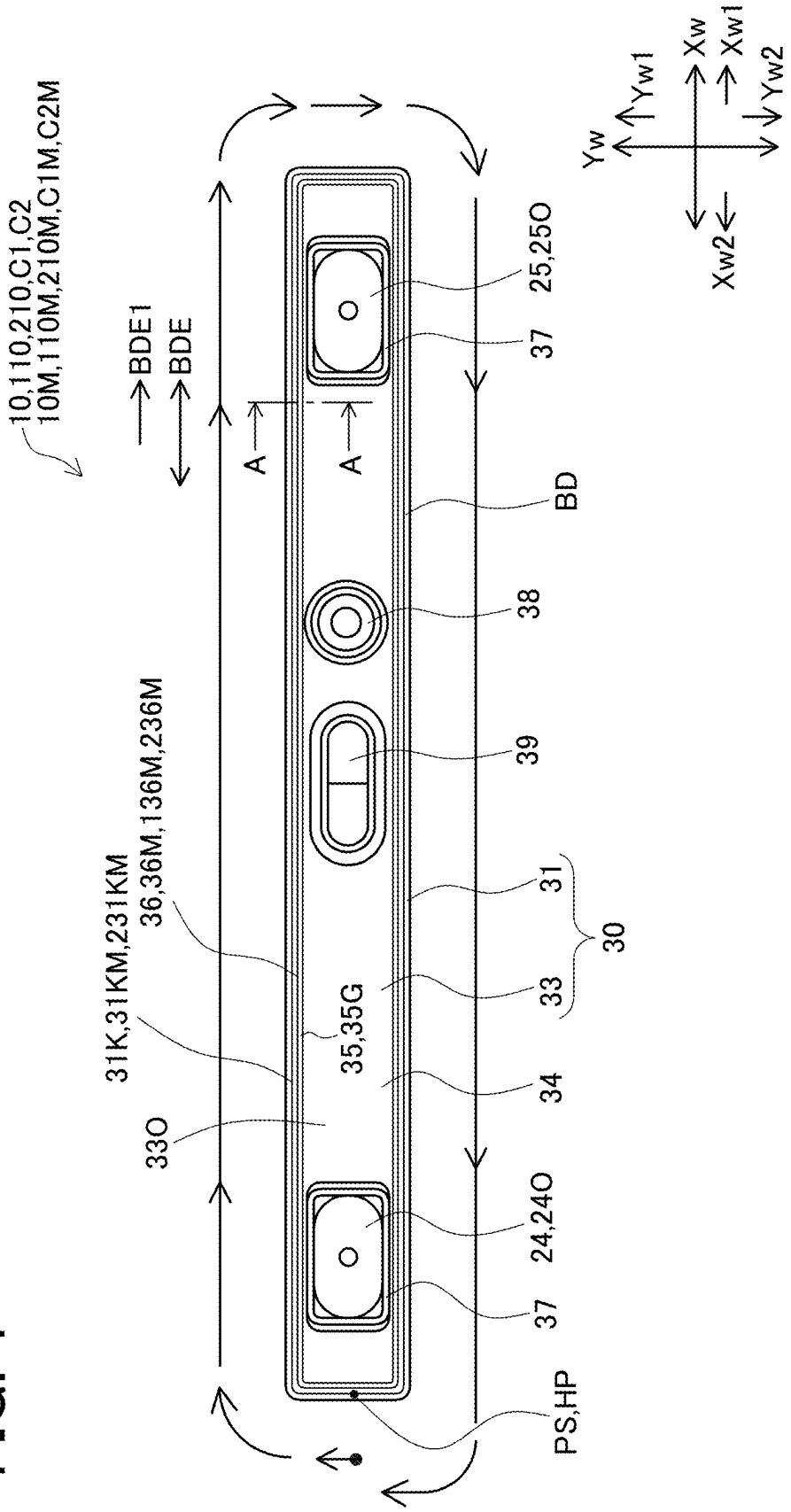
10,110,210,C1,C2
10M,110M,210M,C1M,C2M
BDE1
BDE
A
A
25,25O
37
BD
38
39
31
30
33
34
24,24O
37
PS,HP
36,36M,136M,236M
31K,31KM,231KM
35,35G
33O
Yw
Yw1
Yw2
Xw
Xw1
Xw2

FIG. 2

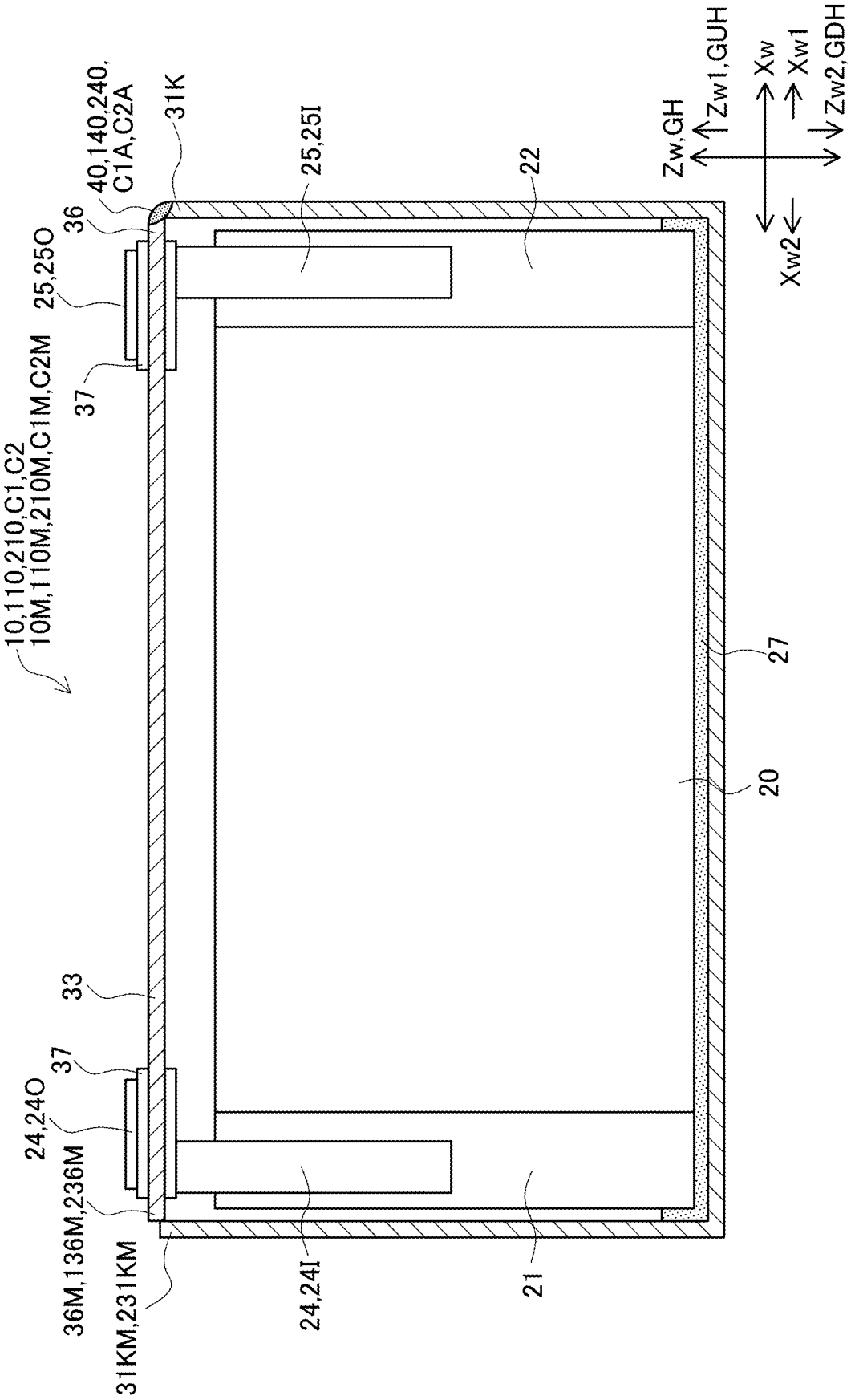
10,110,210,C1,C2
10M,110M,210M,C1M,C2M
25,25O
36
40,140,240,
C1A,C2A
31K
37
25,25I
22
Zw,GH
Zw1,GUH
Xw
Xw1
Zw2,GDH
Xw2
27
20
33
37
24,24O
36M,136M,236M
31KM,231KM
24,24I
21

FIG. 3

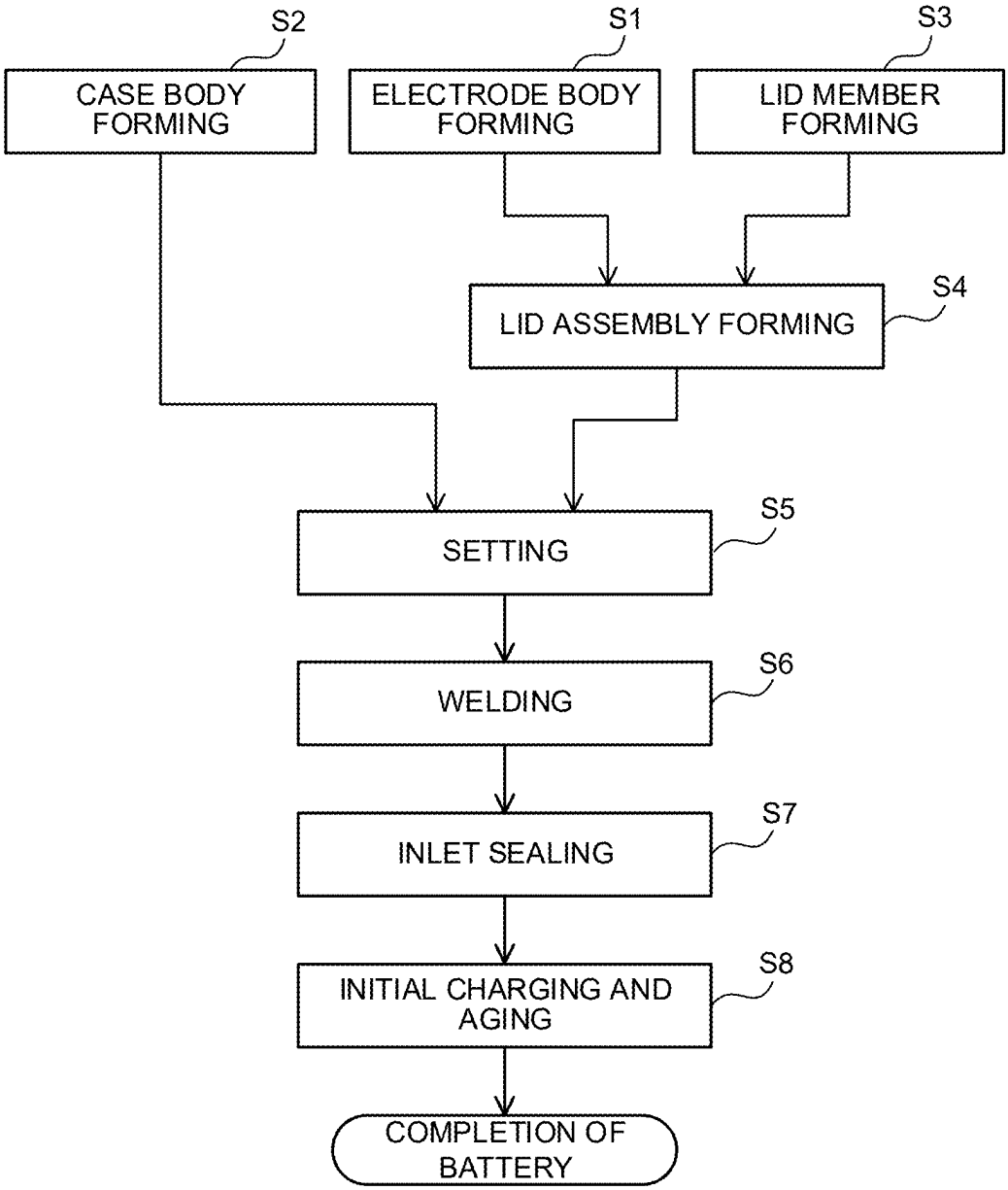
S2
CASE BODY FORMING
S1
ELECTRODE BODY FORMING
S3
LID MEMBER FORMING
S4
LID ASSEMBLY FORMING
S5
SETTING
S6
WELDING
S7
INLET SEALING
S8
INITIAL CHARGING AND AGING
COMPLETION OF BATTERY

FIG. 4

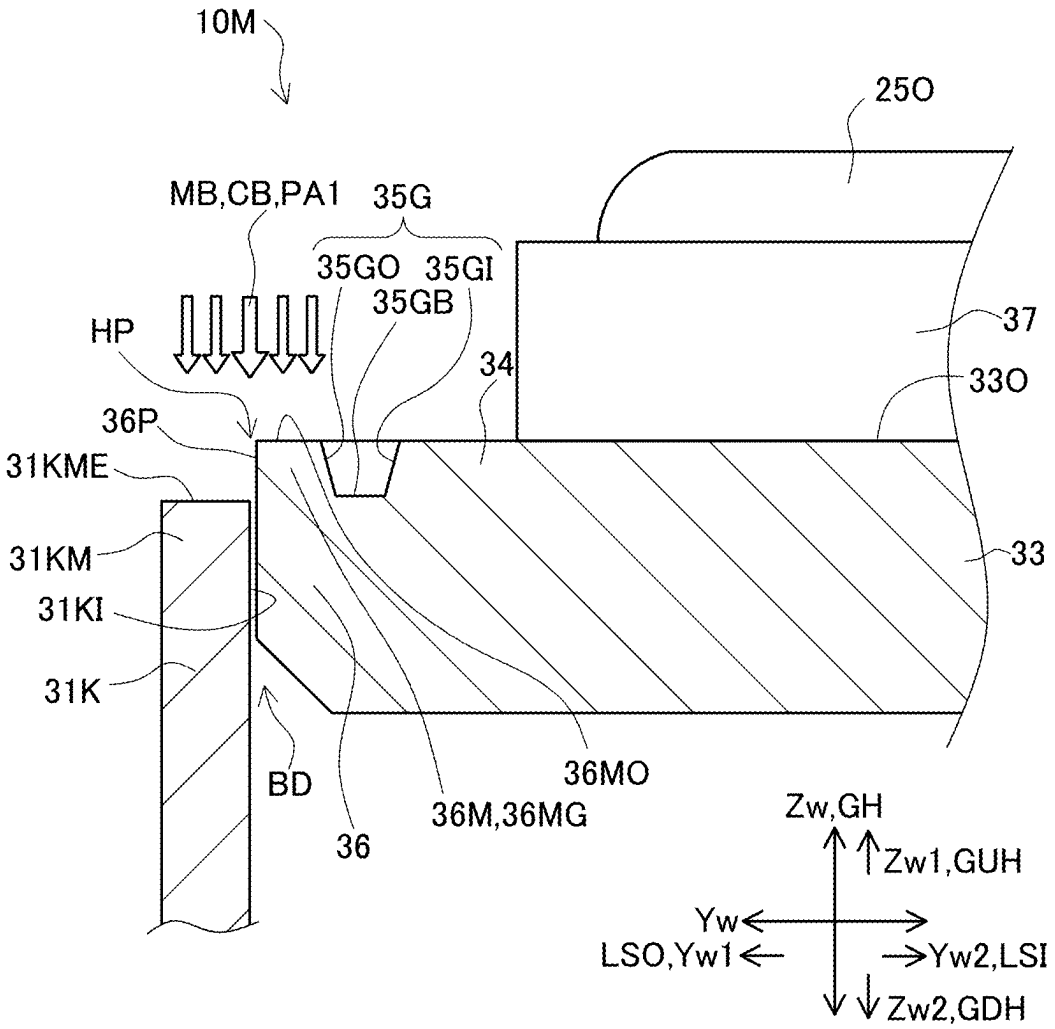
10M
25O
MB,CB,PA1
35G
35GO
35GI
35GB
HP
37
34
33O
36P
31KME
31KM
33
31KI
31K
BD
36MO
36M,36MG
36
Zw,GH
Zw1,GUH
Yw
LSO,Yw1
Yw2,LSI
Zw2,GDH

FIG. 5

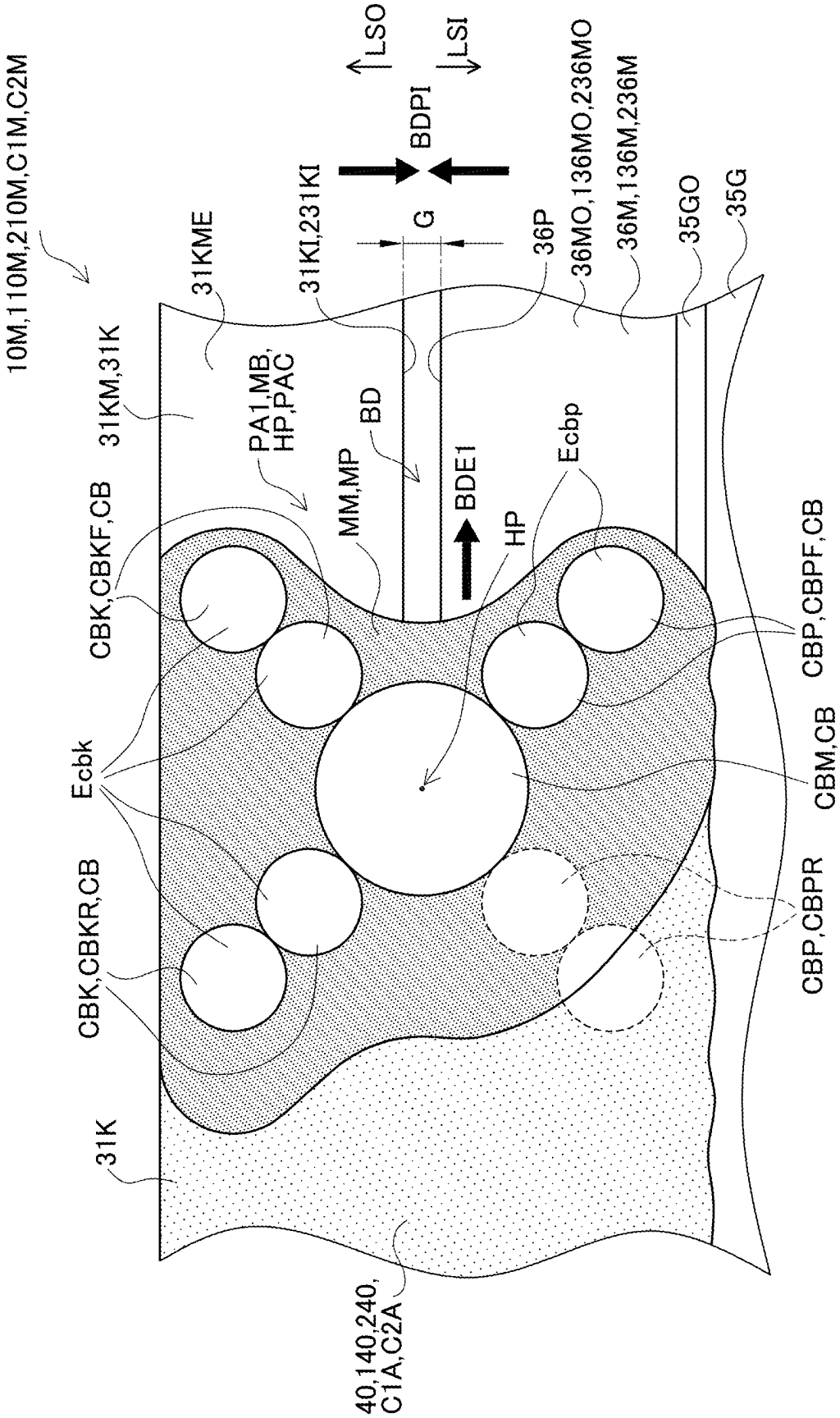
10M,110M,210M,C1M,C2M
31KM,31K
31KME
31KI,231KI
LSO
LSI
BDPI
G
36P
36MO,136MO,236MO
36M,136M,236M
35GO
35G
PA1,MB,
HP,PAC
BD
MM,MP
BDE1
HP
Ecbp
CBK,CBKF,CB
Ecbk
CBK,CBKR,CB
31K
CBP,CBPF,CB
CBM,CB
CBP,CBPR
40,140,240,
C1A,C2A

FIG. 6

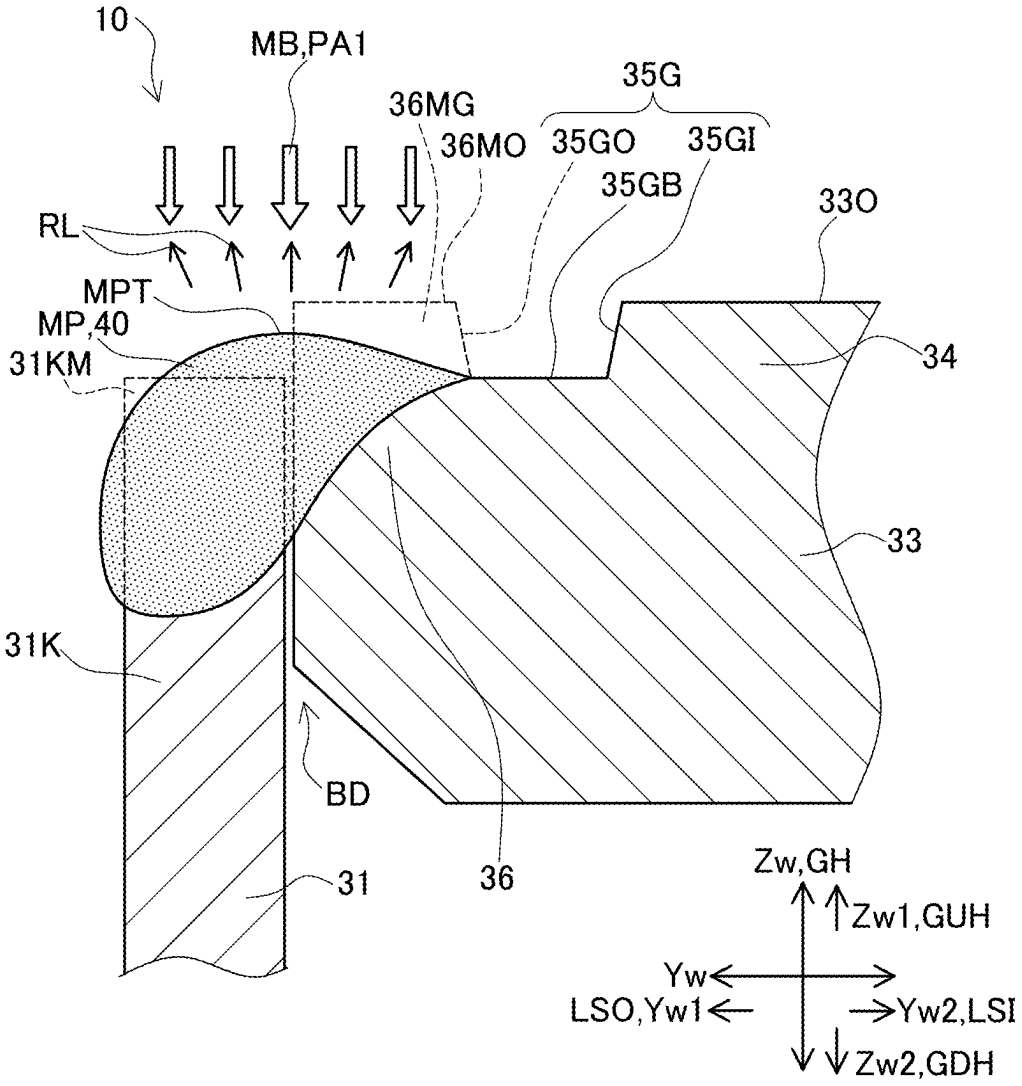
10
MB,PA1
35G
36MG
36MO
35GO
35GI
35GB
33O
RL
MPT
MP,40
31KM
34
33
31K
BD
31
36
Zw,GH
Zw1,GUH
Yw
LSO,Yw1
Yw2,LSI
Zw2,GDH

FIG. 7

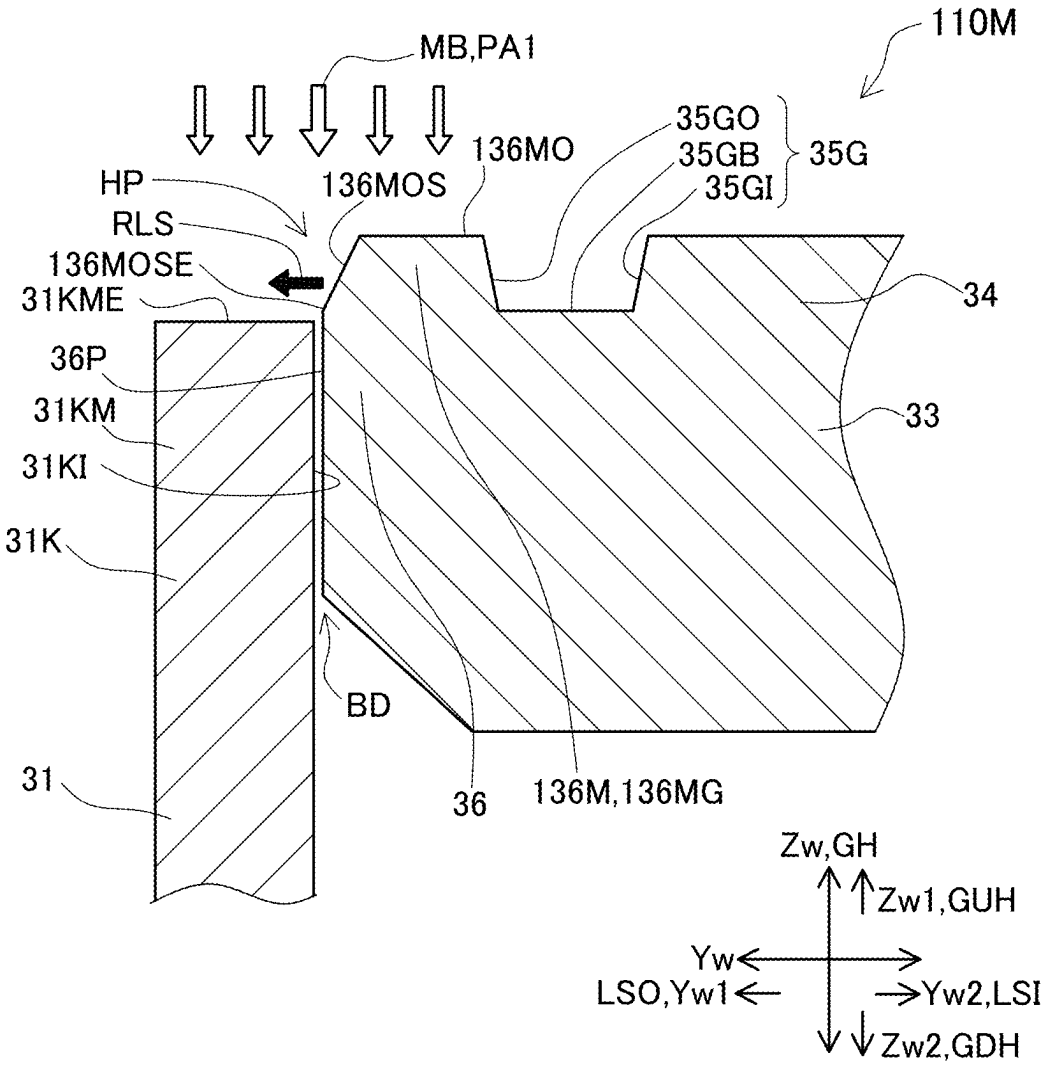
110M
MB,PA1
35GO
35GB
35GI
35G
136MO
HP
136MOS
RLS
136MOSE
31KME
34
36P
31KM
33
31KI
31K
BD
31
36
136M,136MG
Zw,GH
Zw1,GUH
Yw
LSO,Yw1
Yw2,LSI
Zw2,GDH

FIG. 8

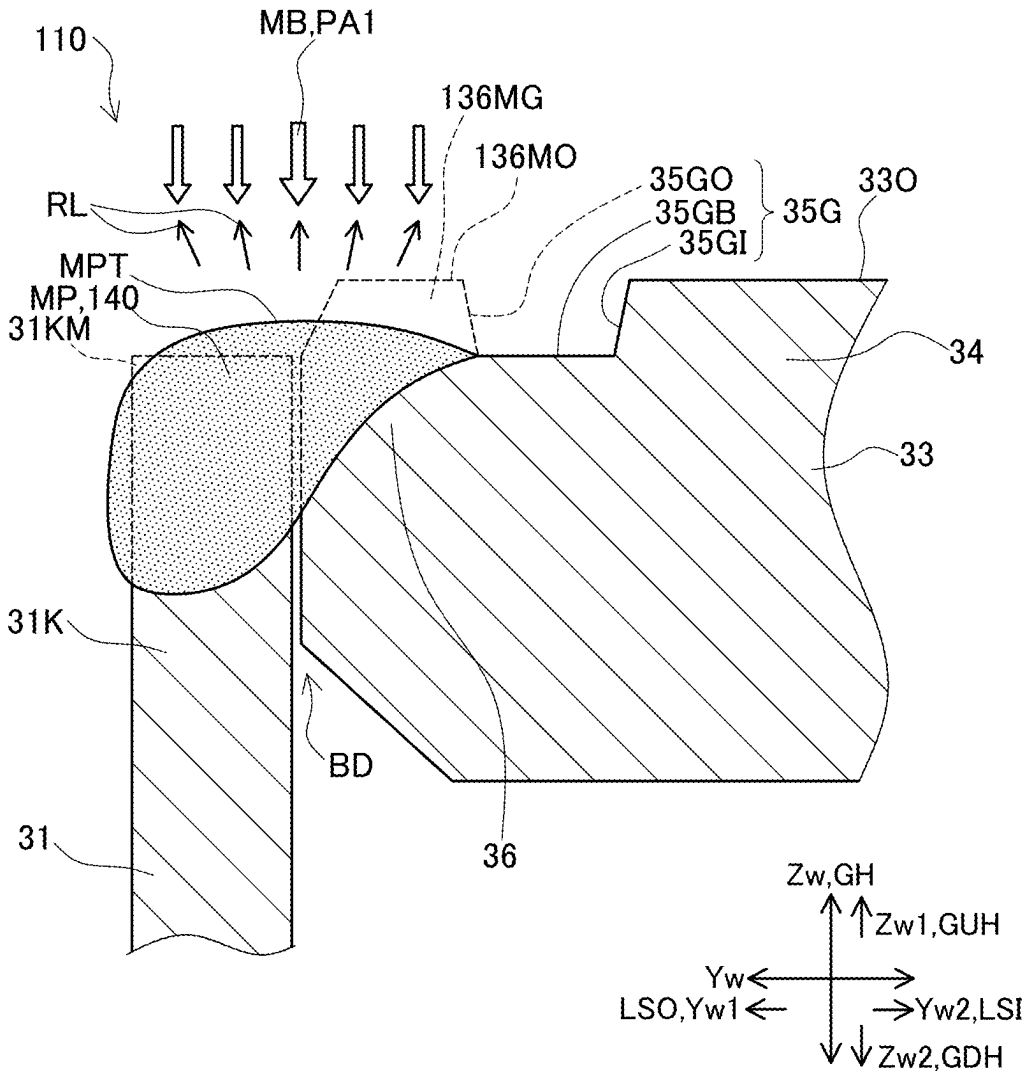
110
MB,PA1
136MG
136MO
35GO
35GB
35GI
35G
33O
RL
MPT
MP,140
31KM
34
33
31K
BD
31
36
Zw,GH
Zw1,GUH
Yw
LSO,Yw1
Yw2,LSI
Zw2,GDH

FIG. 9

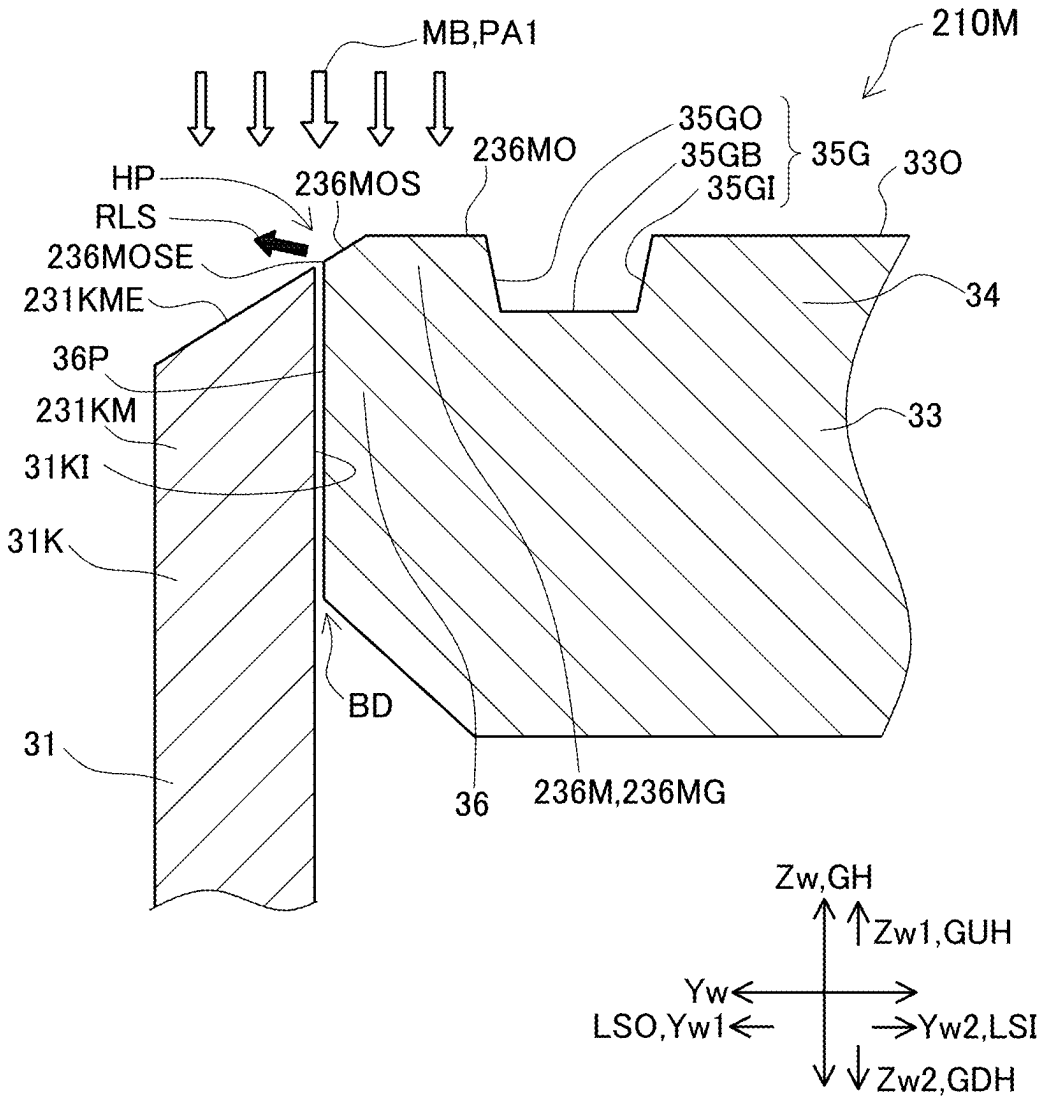
MB,PA1
210M
35GO
35GB
35GI
35G
33O
236MO
HP
236MOS
RLS
236MOSE
231KME
34
36P
231KM
33
31KI
31K
BD
31
36
236M,236MG
Zw,GH
Zw1,GUH
Yw
LSO,Yw1
Yw2,LSI
Zw2,GDH

FIG. 10

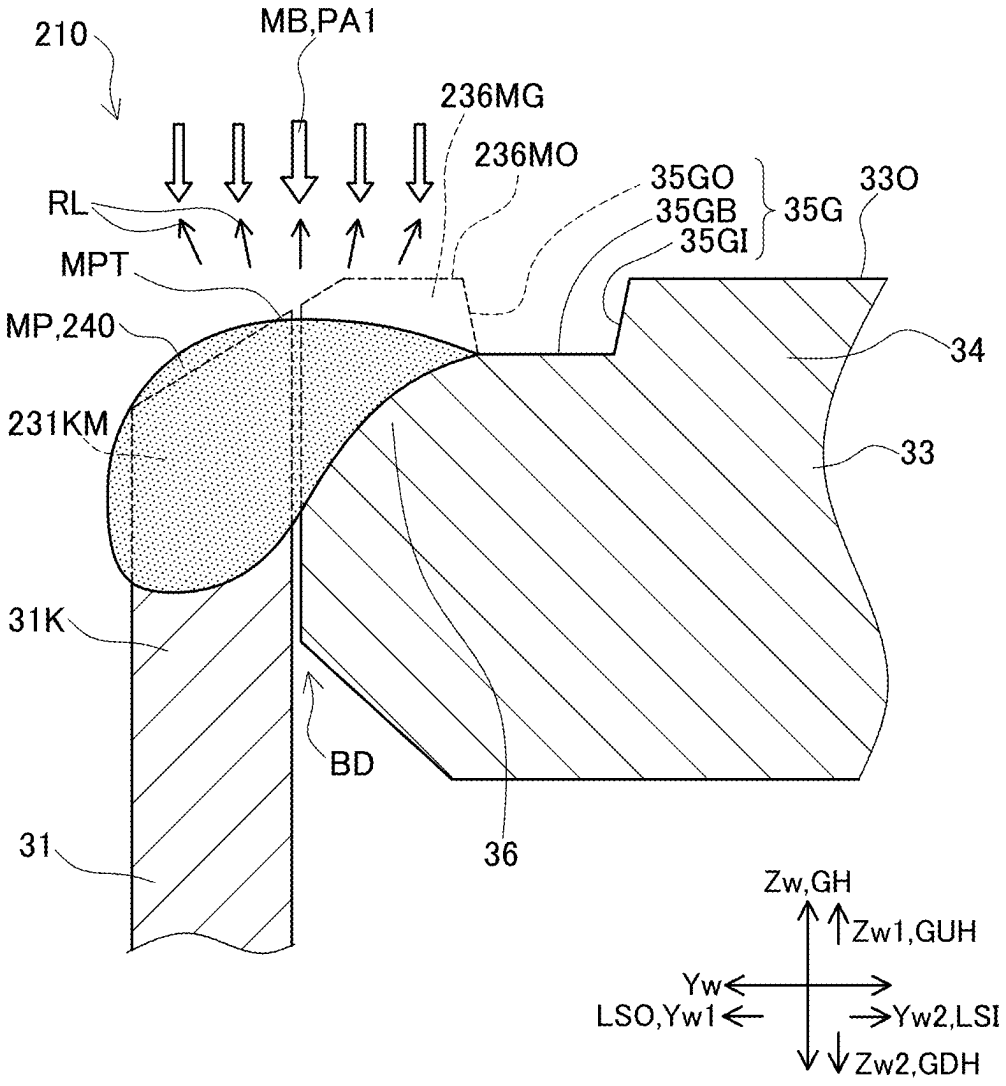
210
MB,PA1
236MG
236MO
35GO
35GB
35GI
35G
33O
RL
MPT
MP,240
34
231KM
33
31K
BD
31
36
Zw,GH
Zw1,GUH
Yw
LSO,Yw1
Yw2,LSI
Zw2,GDH

FIG. 11

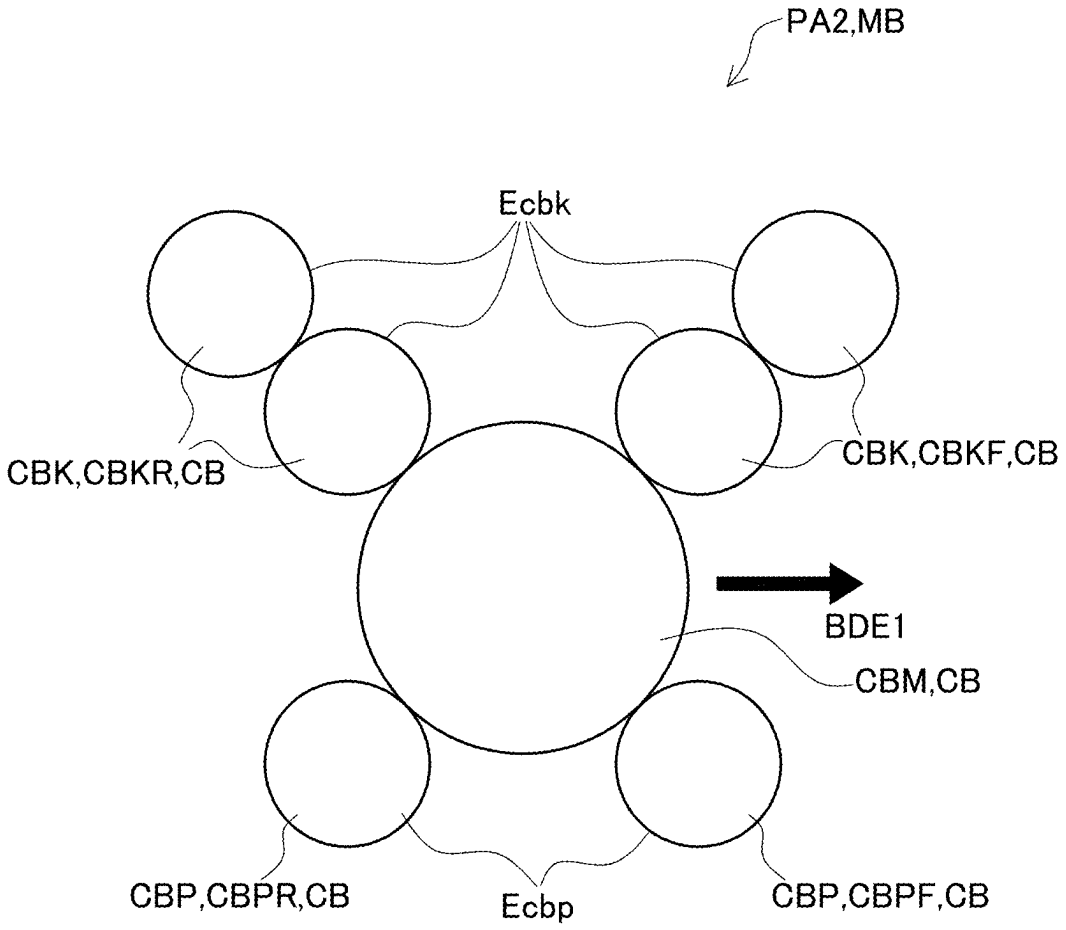
PA2,MB
Ecbk
CBK,CBKR,CB
CBK,CBKF,CB
BDE1
CBM,CB
CBP,CBPR,CB
Ecbp
CBP,CBPF,CB

FIG. 12

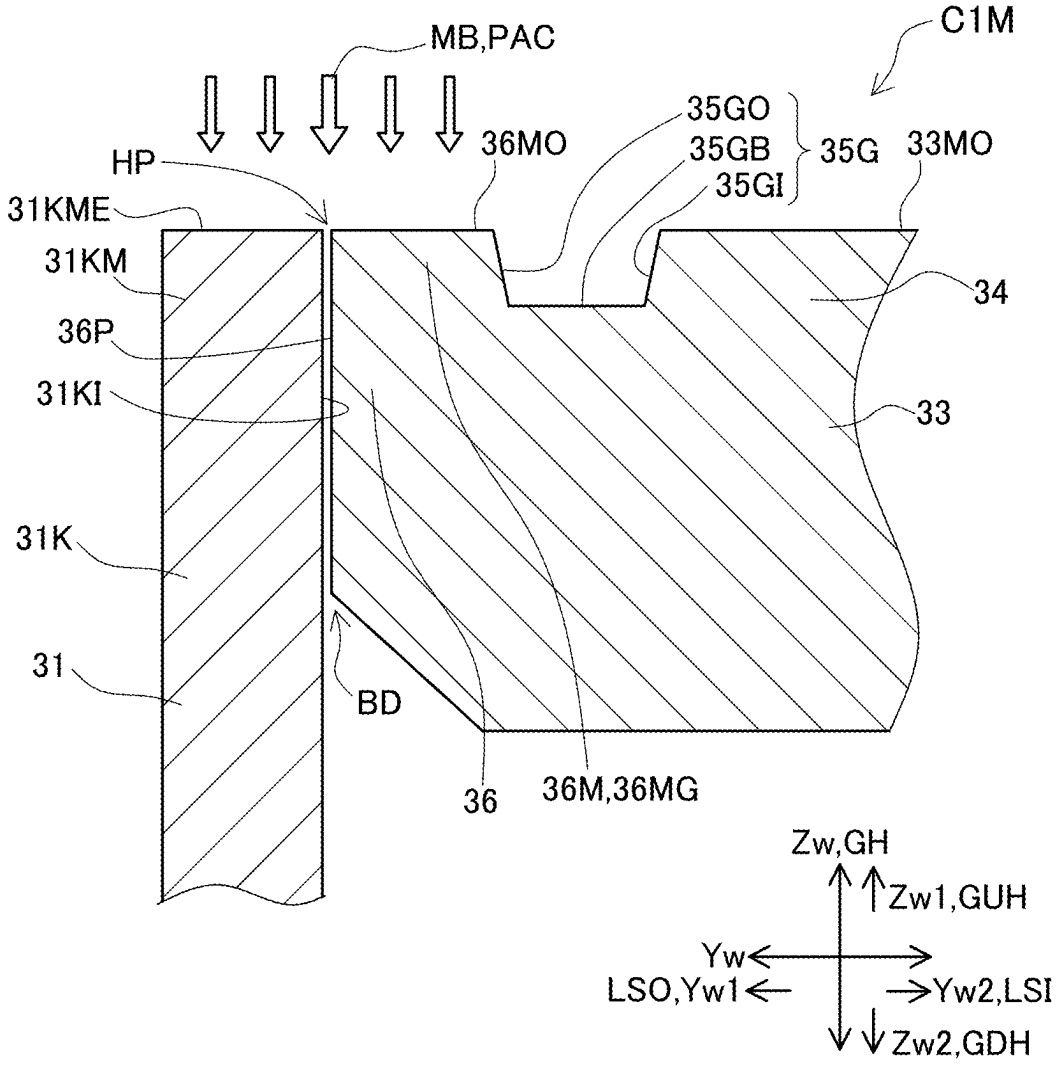
MB,PAC
C1M
35GO
35GB
35GI
35G
33MO
36MO
HP
31KME
31KM
34
36P
31KI
33
31K
31
BD
36
36M,36MG
Zw,GH
Zw1,GUH
Yw
LSO,Yw1
Yw2,LSI
Zw2,GDH

FIG. 13

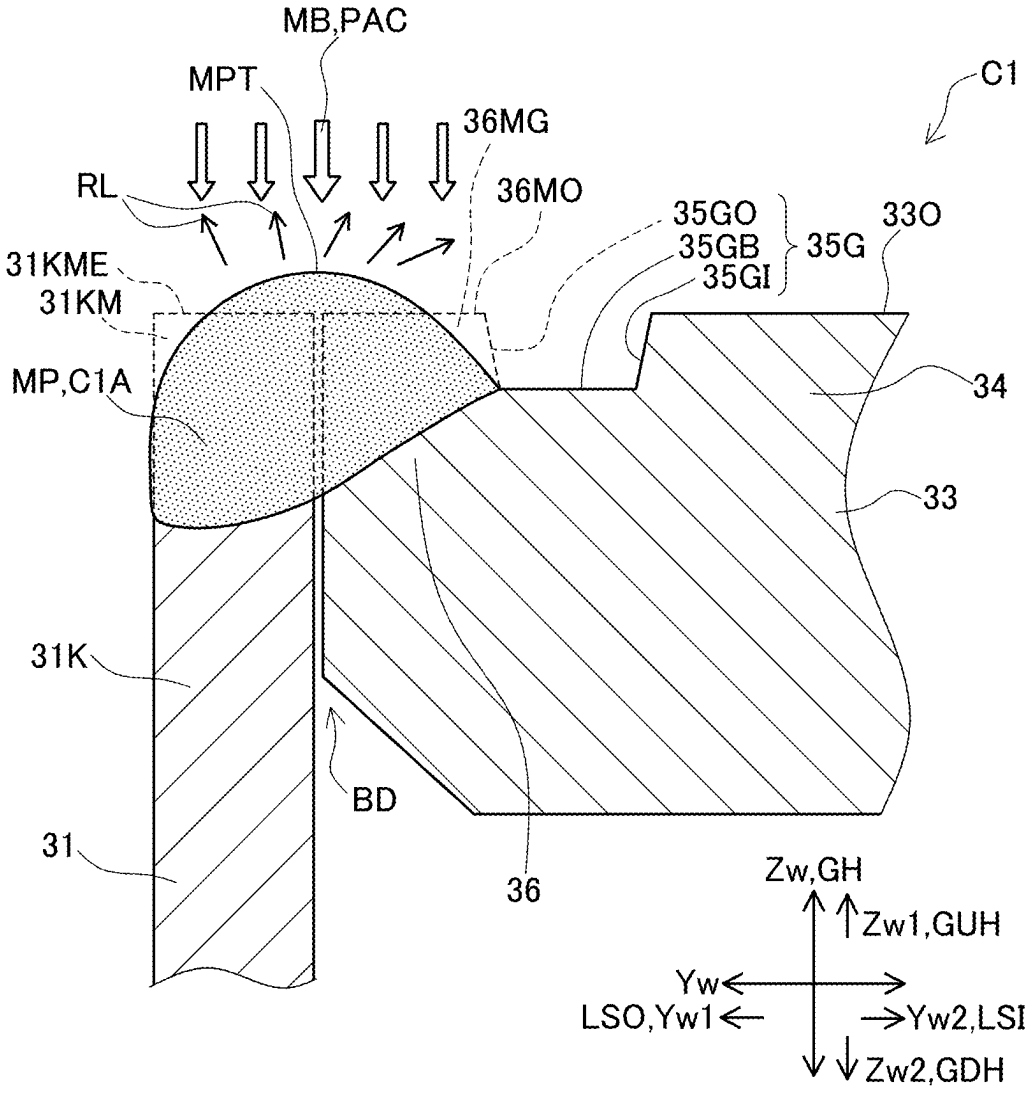
MB,PAC
MPT
C1
36MG
RL
36MO
35GO
33O
35GB
35G
35GI
31KME
31KM
MP,C1A
34
33
31K
BD
31
36
Zw,GH
Zw1,GUH
Yw
LSO,Yw1
Yw2,LSI
Zw2,GDH

FIG. 14

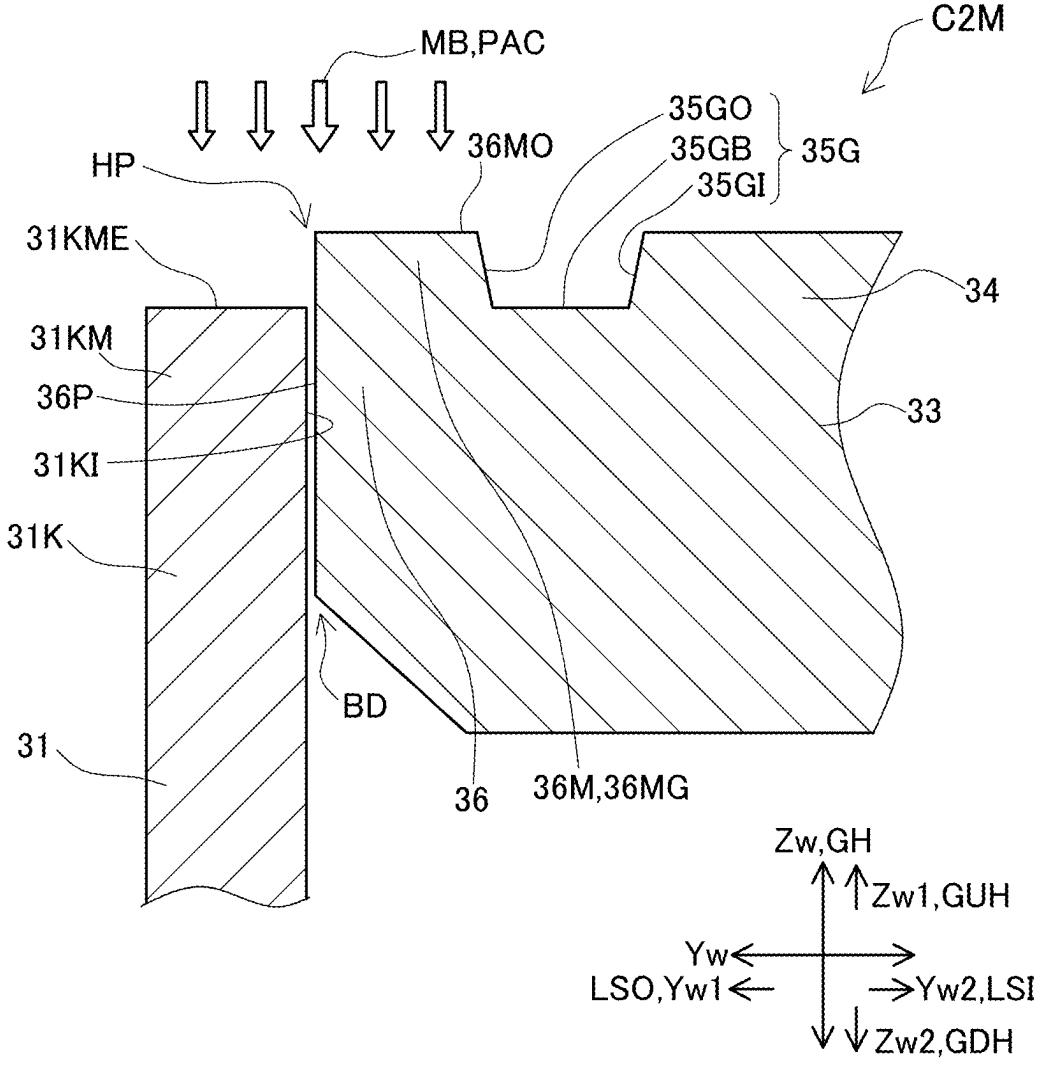
C2M
MB,PAC
35GO
35GB
35GI
35G
36MO
HP
31KME
34
31KM
36P
33
31KI
31K
BD
31
36
36M,36MG
Zw,GH
Zw1,GUH
Yw
LSO,Yw1
Yw2,LSI
Zw2,GDH

FIG. 15

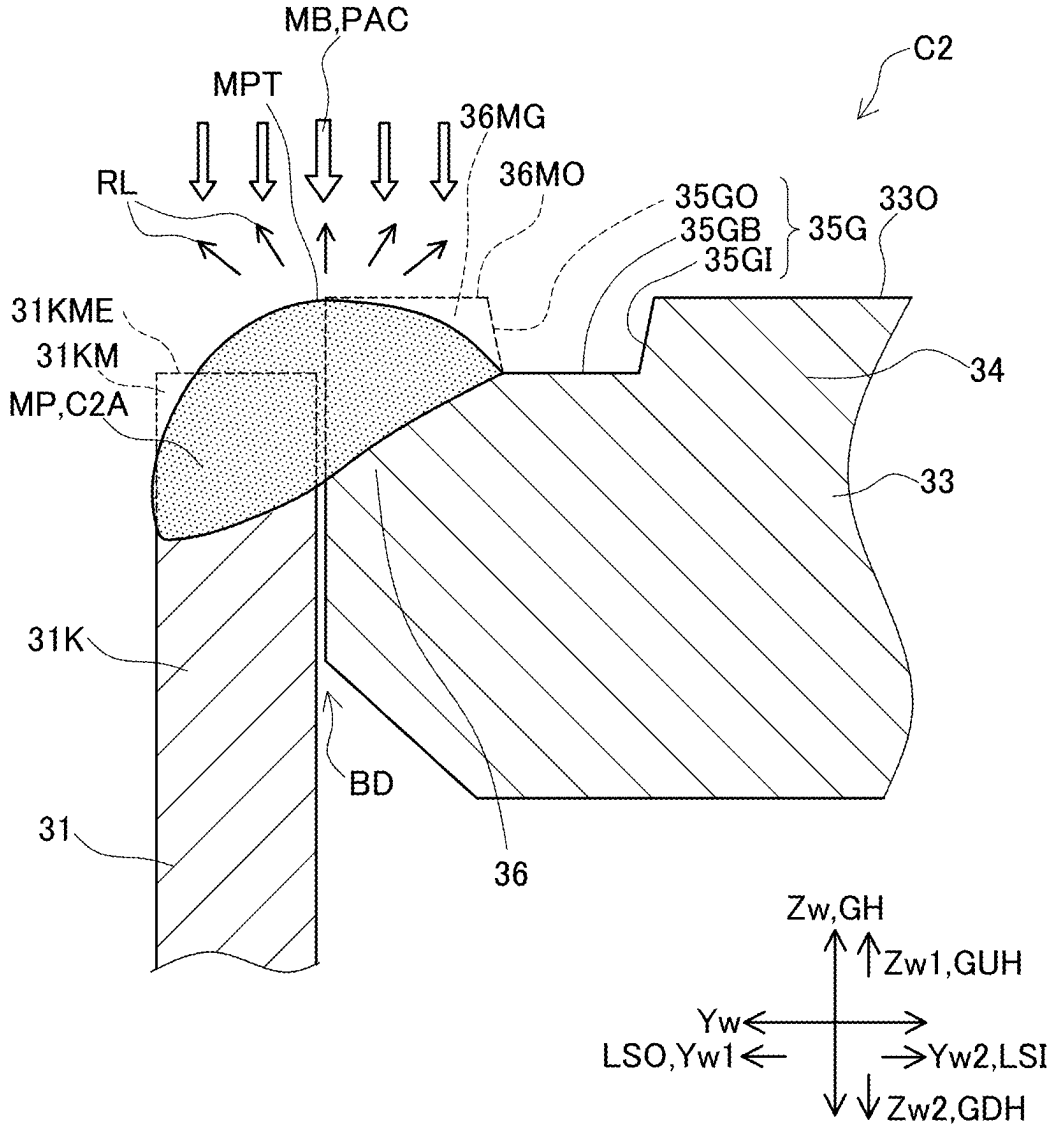
MB,PAC
C2
MPT
36MG
RL
36MO
35GO
35GB
35GI
35G
33O
31KME
31KM
MP,C2A
34
33
31K
BD
31
36
Zw,GH
Zw1,GUH
Yw
LSO,Yw1
Yw2,LSI
Zw2,GDH

METHOD FOR MANUFACTURING A POWER STORAGE DEVICE

CROSS-REFERENCE TO RELATED APPLICATIONS

[0001] This application is based upon and claims the benefit of priority to Japanese Patent Application No. 2024-027820 filed on Feb. 27, 2024, the entire contents of which are incorporated herein by reference.

BACKGROUND

Technical Field

[0002] The disclosure relates to a method for manufacturing a power storage device in which an opening portion of a case body and an outer circumferential edge portion of a lid are welded to each other by laser welding.

Related Art

[0003] Japanese unexamined patent application publication No. 2019-084540 (JP 2019-084540A) discloses the technique that for welding an opening portion of a case body and an outer circumferential edge portion of a lid using a laser beam including a plurality of beamlets, which is a so-called a multi-beam, the intensity of a laser beamlet(s) to be irradiated to the opening portion of the case body is set higher than that of a laser beamlet to be irradiated to the outer circumferential edge portion of the lid. This is to form a molten portion with an upper surface inclined to be lower on the case body side than the lid side so that the reflected light of the laser beam impinging on this molten portion travels outward, preventing or reducing thermal deterioration of an insulation resin member caused by irradiation of the reflected light of the laser beam onto the insulation resin member.

SUMMARY

Technical Problems

[0004] In this publication No. JP 2019-084540A, as described in its FIG. 2, the case body and the lid are placed so that the upper end face of the opening portion of the case body is positioned at a higher side, or position, than the upper surface of the outer circumferential edge portion of the lid. Accordingly, even if the intensity of a laser beamlet to be irradiated to the opening portion of the case body is set higher than that of a laser beamlet to be irradiated to the outer circumferential edge portion of the lid to form a molten portion, this formed molten portion is unlikely to have the shape shown in FIG. 4 of JP 2019-084540A, and may have an upward bulging, or raised, shape, thus causing a reflected light of a laser beamlet irradiated thereto to travel inward and irradiated the insulation resin member, resulting in thermal deterioration of the insulation resin member.

[0005] The present disclosure has been made to address the above problems and has a purpose to provide a method for manufacturing a power storage device, capable of reliably preventing or reducing the occurrence of thermal deterioration, such as scorch, of an insulation resin member caused by a reflected light of a laser beamlet traveling inward during laser welding.

Means of Solving the Problems

[0006] (1) To achieve the above-mentioned purpose, one aspect of the present disclosure provides a method for manufacturing a power storage device comprising: a case member made of metal; and an electrode body housed in the case member, the case member including: a case body having a tube shape with an opening portion; a lid having a flat plate shape, placed in the opening portion of the case body, the lid including: an outer circumferential edge portion; and an inside portion located more inside than the outer circumferential edge portion, a recessed groove, which is depressed in a lid upper surface between the outer circumferential edge portion and the inside portion; and an insulation resin member placed on the lid upper surface of the inside portion of the lid, and the outer circumferential edge portion of the lid and the opening portion of the case body are welded to each other over an entire circumference via a melted-solidified portion formed by a part of the outer circumferential edge portion and a part of the opening portion that are melted together and then solidified, wherein the method comprises: placing the lid in an unmelted opening portion of the case body; and welding the outer circumferential edge portion of the lid and the opening portion of the case body over the entire circumference, wherein in placing the lid, the unmelted opening portion of the case body is placed on a lower side more than a circumferential edge upper surface of an unmelted outer circumferential edge portion of the lid, and in welding, a multi-beam laser beam of a beamlet pattern that provides more heat input to the unmelted opening portion compared to the unmelted outer circumferential edge portion is irradiated to the unmelted outer circumferential edge portion and the unmelted opening portion to laser-weld the outer circumferential edge portion and the opening portion.

[0007] The power storage device in this configuration includes the recessed groove in the lid between the outer circumferential edge portion and the inside portion. In the method for manufacturing this power storage device, in the placing process, different from JP2019-084540A, the unmelted opening portion of the case body is positioned on the lower side more than, or below, the circumferential edge upper surface of the lid. In addition, in the welding process, a multi-beam laser beam of the beamlet pattern that provides more input heat to the opening portion than to the outer circumferential edge portion is irradiated to the outer circumferential edge portion and the opening portion to laser-weld the outer circumferential edge portion and the opening portion.

[0008] Accordingly, it is possible to deeply melt the opening portion of the case body. Furthermore, when an unmelted outer circumferential edge portion of the lid is melted, a part of molten metal originating from the unmelted outer circumferential edge portion moves toward the opening portion of the case body deeply melted at the lower level. Thus, the molten portion made of molten metal, which results from melting of part of the unmelted opening portion of the case body and part of the unmelted outer circumferential edge portion of the lid, is hardly raided, or have almost no bulge, and the top part of the molten portion is generally horizontal and flat. Therefore, the reflected light of the multi-beam laser beam irradiated to the molten portion does not travel toward the insulation resin member placed in the inside portion of

the lid. This can reliably prevent or reduce the occurrence of thermal deterioration, such as scorch, in the insulation resin member.

[0009] The tube-shaped case body may have a tube-shape, such as rectangular tube-shape with opening portions at both ends, or alternatively, a bottomed tube-shape with an open one end and the other closed end. Further, the lid has a flat plate-like shape and is placed in the opening portion of the case body. This lid is provided with a recessed groove, which is depressed between the outer circumferential edge portion and the inside portion. This recessed groove may be formed extending in a ring-shape over the entire circumference along the outer circumferential edge portion. As an alternative, another pattern may be adopted in which a recessed groove is not partially provided on the entire circumference between the outer circumferential edge portion and the inside portion.

[0010] The multi-beam laser beam refers to a laser beam forming a multi-beam composed of a plurality of beamlets, which are irradiated to an irradiation plane at different sites from each other, forming a plurality of laser spots.

[0011] (2) In the foregoing power storage device manufacturing method described in (1), the unmelted opening portion of the case body may have an upward opening end face.

[0012] In this configuration, the unmelted opening portion of the case body has the upward opening end face. Thus, the beamlets forming the multi-beam laser beam can be irradiated from above onto the upward opening end face at small incident angles, allowing the opening portion to be more deeply melted.

[0013] (3) The foregoing power storage device manufacturing method described in (1) or (2) may be configured such that the circumferential edge upper surface of the unmelted outer circumferential edge portion of the lid includes an outer-circumferential-edge inclined surface located more downward on the outside, and in placing the lid, the unmelted opening portion of the case body is placed on the lower side more than an inclined-surface end, which is a part of the outer-circumferential-edge inclined surface of the unmelted outer circumferential edge portion and located on the outside.

[0014] The lid of the power storage device in this configuration includes the outer-circumferential-edge inclined surface as part of the circumferential edge upper surface of the unmelted outer circumferential edge portion. In the placing process, the unmelted opening portion of the case body is placed on the lower side more than, or below, the inclined-surface end of the outer circumferential edge portion. In the welding process, therefore, the reflected light of the laser beam irradiated to the outer-circumferential-edge inclined surface at least at the beginning of melting, of the laser beam irradiated to the circumferential edge upper surface of the unmelted outer circumferential edge portion, is allowed to travel to the outside. Thus, the reflected light does not impinge again on the unmelted opening portion of the case body and travel toward the insulation resin member located on the inside, and thus causes no thermal deterioration of the insulation resin member.

[0015] In addition, the reduced volume of the unmelted outer circumferential edge portion by formation of the outer-circumferential-edge inclined surface can further prevent bulging or rising of a molten portion made of molten metal and a melted-solidified portion resulting from solidification of the molten portion.

[0016] Furthermore, the unmelted opening portion of the case body is placed on the lower side more than the inclined-surface end of the outer-circumferential-edge inclined surface. This placement allows more molten metal resulting from melting of the unmelted outer circumferential edge portion of the lid to move toward the opening portion of the case body located at a lower level, and further can reduce bulging or rising of the molten portion made of the molten metal to further prevent the reflected light of the multi-beam laser beam from traveling toward the insulation resin member located on the inside.

[0017] The outer-circumferential-edge inclined surface may be a flat surface or alternatively a convex surface, such as a semi-cylindrical convex surface that protrudes outward, or a concave surface, such as a semi-cylindrical concave surface that is recessed inward.

[0018] On the other hand, the shape of the upper end face of the unmelted opening portion may also be an upward opening end face that entirely faces upward, or alternatively an inclined surface that is entirely inclined outward. Further, this end face may be provided with an outward sloping surface on the outside of the upward opening end face.

[0019] (4) In the foregoing power storage device manufacturing method described in any one of (1) to (3), in placing the lid, the unmelted opening portion of the case body may be placed on the lower side more than a bottom of the recessed groove.

[0020] In this configuration, the unmelted opening portion of the case body is placed on the lower side more than, or below, the bottom of the recessed groove. This makes it easy for a part of molten metal originating from the unmelted outer circumferential edge portion to move toward the opening portion of the case body at a lower level. Further, when seen from a part of the unmelted outer circumferential edge portion of the lid, located on the upper side, and further on the outside relative to the recessed groove, which is referred herein to as an "unmelted groove outside portion", the recessed groove is present on the inside and also a space is present on the outside where the unmelted opening portion of the case body is not present. In this unmelted groove outside portion, accordingly, the heat by irradiation of the laser beam is less likely to transfer to both the inside and the outside. Even a small amount of heat input can therefore reliably melt the unmelted groove outside portion.

[0021] (5) The foregoing power storage device manufacturing method described in any one of (1) to (4) may be configured such that, in welding, when the multi-beam laser beam is irradiated to a ring-shaped boundary between the unmelted opening portion and the unmelted outer circumferential edge portion and an irradiation site of the multi-beam laser beam is moved forward in a first boundary extending direction, which is one of boundary extending directions of the boundary, the plurality of beamlets forming the multi-beam laser beam includes: one or more outer-circumferential-edge-portion-side beamlets to be irradiated to the unmelted outer circumferential edge portion to melt the unmelted outer circumferential edge portion; and one or more opening-portion-side beamlets to be irradiated to the unmelted opening portion to melty the unmelted opening portion, and the beamlet pattern is a beamlet pattern that provides a larger sum of incident energies of all the opening-

portion-side beamlets than a sum of incident energies of all the outer-circumferential-edge-portion-side beamlets.

[0022] In this configuration, the beamlet pattern of the multi-beam laser beam is designed as a beamlet pattern that provides the total incident energy of all the opening-portion-side beamlets higher than the total incident energy of all the outer-circumferential-edge-portion-side beamlets. This ensures that more heat input can be applied to the opening portion of the case body than to the outer circumferential edge portion of the lid.

[0023] (6) The foregoing power storage device manufacturing method described in (5) may be configured such that the plurality of beamlets forming the multi-beam laser beam includes a single inner main beamlet to be irradiated onto the boundary, on a boundary side relative to the outer-circumferential-edge-portion-side beamlets and the opening-portion-side beamlets, the one or more outer-circumferential-edge-portion-side beamlets include one or more outer-circumferential-edge-portion-side leading beamlets that move forward in the first boundary extending direction earlier than the inner main beamlet and melt the unmelted outer circumferential edge portion, the one or more opening-portion-side beamlets include one or more opening-portion-side leading beamlets that move forward in the first boundary extending direction earlier than the inner main beamlet and melt the unmelted opening portion, the inner main beamlet has a higher incident energy than an incident energy of each of the outer-circumferential-edge-portion-side beamlets and the opening-portion-side beamlets, the inner main beamlet is irradiated to a molten portion integrally formed across the boundary from molten metal originating from the unmelted outer circumferential edge portion melted by the outer-circumferential-edge-portion-side leading beamlets and the unmelted opening portion melted by the opening-portion-side leading beamlets.

[0024] In this manufacturing method, the inner main beamlet to be irradiated onto the boundary with a highest incident energy is applied to the molten portion. This enables laser welding while reliably preventing the inner main beamlet from passing through the boundary and entering in the case member, causing the occurrence of defects, such as burning or scorching of an electrode body. In addition, the use of the single inner main beamlet having a higher incident energy enables a part of the outer circumferential edge portion of the lid and a part of the opening portion of the case body, near the boundary, to be deeply melted and welded together.

[0025] (7) In the foregoing power storage device manufacturing method described in (5) or (6), in welding, at least an unmelted groove outside portion located outside the recessed groove, as part of the unmelted outer circumferential edge portion of the lid, may be entirely melted.

[0026] In the welding process of this manufacturing method, at least the entire unmelted groove outside portion, which is a part of the unmelted outer circumferential edge portion of the lid, is melted. This manner enables to easily determine whether the dimension of a weld bead width is appropriate or not based on whether or not the groove outside surface of the recessed groove remains unmelted. Further, this can also stabilize the depth of welding penetration and the volume of the melted-solidified portion.

BRIEF DESCRIPTION OF THE DRAWINGS

[0027] FIG. **1** is a plan view of a battery and an unwelded battery in an embodiment, modified examples 1 and 2, and comparative examples 1 and 2;

[0028] FIG. **2** is a longitudinal cross-sectional view of the battery and the unwelded battery in the embodiment, modified examples 1 and 2, and comparative examples 1 and 2;

[0029] FIG. **3** is a flowchart showing each step in a laser-welding method in the embodiment, modified examples 1 and 2, and comparative examples 1 and 2;

[0030] FIG. **4** is an enlarged cross-sectional explanatory view of the unwelded battery in the embodiment, taken along a line A-A in FIG. **1**, showing a state before laser welding, in which a lid is placed in an unmelted opening portion of a case body;

[0031] FIG. **5** is an explanatory diagram showing how an opening portion of the case body and an outer circumferential edge portion of the lid are melted and laser-welded together by a multi-beam in the embodiment, modified examples 1 and 2, and comparative examples 1 and 2;

[0032] FIG. **6** is an enlarged cross-sectional view of the battery in the embodiment, taken along the line A-A in FIG. **1**, showing a state after laser-welding the opening portion of the case body and the outer circumferential edge portion of the lid in the battery;

[0033] FIG. **7** is an enlarged cross-sectional view of the unwelded battery in the modified example 1, taken along the line A-A in FIG. **1**, showing a state before laser welding, in which the lid is placed in the unmelted opening portion of the case body;

[0034] FIG. **8** is an enlarged cross-sectional view of the battery in the modified example 1, taken along the line A-A in FIG. **1**, showing a state after laser-welding the opening portion of the case body and the outer circumferential edge portion of the lid;

[0035] FIG. **9** is an enlarged cross-sectional view of the unwelded battery in the modified example 2, taken along the line A-A in FIG. **1**, showing a state before laser welding, in which the lid is placed in the unmelted opening portion of the case body;

[0036] FIG. **10** is an enlarged cross-sectional view of the battery in the modified example 2, taken along the line A-A in FIG. **1**, showing a state after laser-welding the opening portion of the case body and the outer circumferential edge portion of the lid;

[0037] FIG. **11** is an explanatory diagram showing another beamlet pattern to be used in laser welding;

[0038] FIG. **12** is an enlarged cross-sectional view of the unwelded battery in the comparative example 1, taken along the line A-A in FIG. **1**, showing a state before laser welding, in which the lid is placed in the unmelted opening portion of the case body;

[0039] FIG. **13** is an enlarged cross-sectional view of the battery in the comparative example 1, taken along the line A-A in FIG. **1**, showing a state after laser-welding the opening portion of the case body and the outer circumferential edge portion of the lid;

[0040] FIG. **14** is an enlarged cross-sectional view of the unwelded battery in the comparative example 2, taken along the line A-A in FIG. **1**, showing a state before laser welding, in which the lid is placed in the unmelted opening portion of the case body; and

[0041] FIG. **15** is an enlarged cross-sectional view of the battery in the comparative example 2, taken along the line

A-A in FIG. **1**, showing a state after laser-welding the opening portion of the case body and the outer circumferential edge portion of the lid.

DETAILED DESCRIPTION OF THE EXEMPLARY EMBODIMENTS

Embodiment

[0042] A detailed description of an embodiment of this disclosure will now be given referring to the accompanying drawings. FIG. **1** is a plan view of a battery **10** in the embodiment, FIG. **2** is a longitudinal cross-sectional view of this battery **10**, and FIG. **3** is a flowchart showing each step in the process for manufacturing the battery **10**.

[0043] The battery **10** shown in FIGS. **1** and **2** is a power storage device including a case member **30** made of metal (aluminum in the present embodiment) in a parallelepiped rectangular, or prismatic, shape, in which a well-known wound electrode body **20** and an electrolyte **27** are housed. The case member **30** includes a case body **31** having a bottomed rectangular tube-shape that opens on the upper side, and a rectangular plate-shaped lid **33**, which is inserted in an opening portion **31**K of the case body **31** and closes the opening portion **31**K. The opening portion **31**K of the case body **31** and an outer circumferential edge portion **36** of the lid **33** are hermetically joined by a melted-solidified portion **40** (see an upper right portion in FIG. **2**) formed by laser welding over their entire circumference. This battery **10** is a secondary battery that can be charged and discharged through a positive terminal **24** and a negative terminal **25**, which will be described later, and concretely, a lithium ion secondary battery. In the present embodiment, three perpendicular directions of this battery **10** and an unwelded battery **10**M are defined as indicated in FIGS. **1** and **2**. Specifically, the long-side direction of the lid **33** is referred to as a work X-direction Xw, the short-side direction of the same is referred to as a work Y-direction Yw, and the depth direction of the case body **31** is referred to as a work Z-direction Zw. Further, in each direction Xw, Yw, Zw, one side Xw**1**, Yw**1**, Zw**1** and the other side Xw**2**, Yw**2**, Zw**2** are also defined as indicated in FIGS. **1** and **2**.

[0044] The electrode body **20** is housed in the case body **31**. An inner positive terminal part **24**I of the positive terminal **24** is welded to a positive current collector part **21** of the electrode body **20**. This positive terminal **24** extends out through the lid **33**, forming an outer positive terminal part **24**O. Similarly, an inner negative terminal part **25**I of the negative terminal **25** is welded to a negative current collector part **22** of the electrode body **20**. This negative terminal **25** extends out through the lid **33**, forming an outer negative terminal part **25**O. Insulation resin member **37** are provided each between the lid **33** and one of the positive terminal **24** and the negative terminal **25** to hermetically insulate them. These insulation resin members **37** are placed on a lid upper surface **33**O of the lid **33**. Further, the lid **33** is provided with a safety valve **39** near the center and an inlet sealing member **38** sealing a liquid inlet (not shown) between the safety valve **39** and the outer negative terminal part **25**O.

[0045] The lid **33** of a flat plate shape includes a ring-shaped outer circumferential edge portion **36** located along a circumferential or perimetrical edge, and an inside portion **34** located on the inside LSI relative to the outer circumferential edge portion **36**. The lid upper surface **33**O, facing to the one side Zw**1** in the work Z-direction Zw (upward in FIGS. **2**, **4**, and **5**), is provided with a recessed groove **35**G depressed toward the other side Zw**2** and circumferentially extending in a ring-shape, between the outer circumferential edge portion **36** and the inside portion **34**. The outer circumferential edge portion **36** of the lid **33** and the opening portion **31**K of the case body **31** are hermetically laser-welded together over their entire circumference via the melted-solidified portion **40** made of a part of the outer circumferential edge portion **36** and a part of the opening portion **31**K, which have been melted and merged, and then solidified.

[0046] The process for manufacturing the battery **10** in the embodiment will be described referring to FIG. **3**. In an electrode-body forming step S**1**, the electrode body **20** of a flat wound shape is formed by a well-known method. In parallel with the step S**1**, in the case-body forming step S**2**, the case body **31** made of aluminum in a bottomed rectangular tube-shape is formed by a well-known method. Further, in parallel with the above steps S**1** and S**2**, in a lid forming step S**3**, the lid **33** having a rectangular flat plate shape is formed by a well-known method.

[0047] In a lid assembly forming step S**4**, subsequently, the positive terminal **24** and the negative terminal **25** are integrated with the lid **33** via the insulation resin members **37**, and the inner positive terminal part **24**I of the positive terminal **24** and the inner negative terminal part **25**I of the negative terminal **25** are respectively connected to the positive current collector part **21** and the negative current collector part **22** of the electrode body **20**. Thus, a lid assembly (not shown) is completed, in which the electrode body **20** is integrated with the lid **33**.

[0048] In a placing step S**5**, the electrode body **20** of the lid assembly is inserted in the case body **31** and then the lid **33** is placed in an unmelted opening portion **31**KM of the case body **31**. In a welding step S**6**, subsequently, the outer circumferential edge portion **36** and the opening portion **31**K are laser-welded together in a ring shape over their entire circumference. Specifically, a part of an unmelted outer circumferential edge portion **36**M of the lid **33** and a part of the unmelted opening portion **31**KM of the case body **31** are melted and merged by irradiation of laser, and then solidified to form the melted-solidified portion **40**.

[0049] In an inlet sealing step S**7**, the electrolyte **27** is poured into the case member **30** through a liquid inlet (not shown) by a well-known method, so that the electrolyte **27** is impregnated in the electrode body **20**. After that, the liquid inlet is sealed with the inlet sealing member **38**. In an initial charge and aging step S**8**, furthermore, the battery **10** is subjected to initial charging and then to high-temperature aging, etc. by a well-known method. Thus, the battery **10** is completed.

[0050] The placing step S**5** and the welding step S**6** in the process for manufacturing the battery **10** in the embodiment will be described in detail referring to FIGS. **1**, **2**, and **4** to **6**. FIG. **4** is an enlarged cross-sectional view of the unwelded battery **10**M in a state before laser welding, taken along a line A-A in FIG. **1**. In this figure, the insulation resin member **37** and the outer negative terminal part **25**O are visible on the lid upper surface **33**O of the lid **33** and on the inside LSI (the other side Yw**2** in the work Y-direction Yw, the right side in the figure) relative to the recessed groove **35**G. On the other hand, FIG. **6** is an enlarged cross-sectional view of the battery **10** taken along the line A-A in FIG. **1**, showing

a state after laser welding. However, in FIG. **6**, unlike FIG. **4**, the insulation resin member **37** and the outer negative terminal part **25**O are not illustrated. The same applies to FIGS. **7** to **10** and FIGS. **12** to **15** for modified examples 1 and 2 and comparative examples 1 and 2.

[0051] In the placing step S**5**, as shown in FIG. **4**, the lid **33** is placed in the unmelted opening portion **31**KM of the case body **31**. In the placing step S**5** and welding step S**6**, the unwelded battery **10**M is oriented so that the work Z-direction Zw of the unwelded battery **10**M coincides with a vertical direction GH. The same applies to unwelded batteries **110**M, **210**M, C**1**M, and C**2**M, which will be mentioned later. Accordingly, the one side Zw**1** coincides with an upper side GUH, and the other side Zw**2** coincides with a lower side GDH. The unmelted opening portion **31**KM of the case body **31** has an upward opening end face **31**KME, as an end face, facing upward, i.e., to the upper side GUH. The flat plate-shaped lid **33** has the outer circumferential edge portion **36** (an unmelted outer circumferential edge portion **36**M) and the inside portion **34**, as described above, and the recessed groove **35**G depressed downward, i.e., to the lower side GDH, between the outer circumferential edge portion **36** (the unmelted outer circumferential edge portion **36**M) and the inside portion **34**. The recessed groove **35**G in the embodiment is a trapezoidal groove having a trapezoidal cross-section, including a bottom **35**GB, a groove inside surface **35**GI inclined and located on the inside LSI relative to the bottom **35**GB, and a groove outside surface **35**GO inclined and located on the outside LSO relative to the bottom **35**GB. Further, a circumferential edge upper surface **36**MO, which is the upper surface of the unmelted outer circumferential edge portion **36**M, is flush with the lid upper surface **33**O.

[0052] In the placing step S**5** in the embodiment, the lid **33** is placed in the case body **31** so that the unmelted opening portion **31**KM of the case body **31** is located on the lower side GDH more than, or below, the circumferential edge upper surface **36**MO of the unmelted outer circumferential edge portion **36**M of the lid **33**. Thus, an opening inner peripheral surface **31**KI facing to the inside LSI (rightward in FIG. **4**), as part of the unmelted opening portion **31**KM of the case body **31**, and an outer peripheral surface **36**P of the outer circumferential edge portion **36** of the lid **33** are positioned facing each other while being in contact with or separated with a slight gap G from each other (see FIG. **5**). Also in the modified examples 1 and 2 and comparative examples 1 and 2, in the placing step S**5**, the lid **33** is placed in the unmelted opening portion **31**KM, **231**KM of the case body **31** so that the opening inner peripheral surface **31**KI and the outer peripheral surface **36**P are positioned facing each other while being in contact with or separated with a slight gap G from each other.

[0053] In the embodiment, especially, the upward opening end face **31**KME of the unmelted opening portion **31**KM of the case body **31**, hence, the entirety of the unmelted opening portion **31**KM of the case body **31**, is placed on the lower side GDH more than the bottom **35**GB of the recessed groove **35**G.

[0054] Then, the welding step S**6** is performed. In the welding step S**6** in the embodiment, a multi-beam MB composed of a plurality of (seven in the embodiment) beamlets CB, which will form a beamlet pattern PA**1** mentioned later on an irradiation site HP, is generated by use of a laser welding device not shown. The generated multi-beam MB is irradiated from the upper side GUH above the unwelded battery **10**M to the irradiation site HP on the boundary BD between the unmelted opening portion **31**KM of the case body **31** and the unmelted outer circumferential edge portion **36**M of the lid **33**, and further the irradiation site HP is moved, laser-welding the opening portion **31**K and the outer circumferential edge portion **36**. To be specific, as indicated by arrows in FIG. **1**, the irradiation site HP of the multi-beam MB is moved forward from a start point PS in one of boundary extending directions BDE of a rectangular ring-shaped boundary BD, i.e., in a first boundary extending direction BDE**1**, which is a clockwise direction in plan view in this embodiment, and on the boundary BD to hermetically laser-weld the opening portion **31**K and the outer circumferential edge portion **36** over their entire circumference.

[0055] One example of a laser welding device used for laser welding may be configured to generate a multi-beam MB by branching a single laser beam generated by a fiber laser or the like into a plurality of beamlets by use of a diffractive optical element (DOE) or a photonic crystal, and additionally include a Z lens for adjusting a focal point in an optical axis direction and an XY scanner unit for deflecting a laser beam. The multi-beam MB may be composed of a plurality of laser beamlets collected and combined.

[0056] The present embodiment employs the multi-beam MB composed of seven beamlets CB, forming the beamlet pattern PA**1** indicated with solid lines in FIG. **5** on the irradiation site HP. This multi-beam MB includes an inner main beamlet CBM, as one of the beamlets CB, arranged at the center and provides a higher incident energy than other beamlets CB. The multi-beam MB further includes, as the other beamlets CB, one or more (two in the beamlet pattern PA**1**) outer-circumferential-edge-portion-side beamlets CBP, which are arranged on the inside LSI (a lower side in FIG. **5**) relative to the inner main beamlet CBM and is to be irradiated to the unmelted outer circumferential edge portion **36**M to melt the unmelted outer circumferential edge portion **36**M, and one or more (four in the beamlet pattern PA**1**) opening-portion-side beamlets CBK, which are arranged on the outside LSO (an upper side in FIG. **5**) relative to the inner main beamlet CBM and is to be irradiated to the unmelted opening portion **31**KM to melt the unmelted opening portion **31**KM.

[0057] Six beamlets of the multi-beam MB, i.e., two outer-circumferential-edge-portion-side beamlets CBP and four opening-portion-side beamlets CBK, except for the inner main beamlet CBM, have the same incident energy as each other. Therefore, the multi-beam MB has the beamlet pattern PA**1** in which the total incident energy Ecbk (the sum of incident energies) of all of (four) opening-portion-side beamlets CBK is larger than the total incident energy Ecbp (the sum of incident energies) of all of (two) outer-circumferential-edge-portion-side beamlets CBP. Therefore, when irradiated to the irradiation site HP on the boundary BD, the multi-beam MB can apply more heat input to the unmelted opening portion **31**KM than to the unmelted outer circumferential edge portion **36**M.

[0058] In the present embodiment, furthermore, as shown in FIG. **4**, the unmelted opening portion **31**KM of the case body **31** has the upward opening end face **31**KME facing to the upper side GUH. This allows the opening-portion-side beamlets CBK forming the multi-beam MB to be irradiated at a small incident angle from the upper side GUH to the

upward opening end face **31**KME of the unmelted opening portion **31**KM, more deeply melting the opening portion **31**K.

[0059] The unwelded battery **10**M in the present embodiment, as described above, includes the recessed groove **35**G between the outer circumferential edge portion **36** (the unmelted outer circumferential edge portion **36**M) and the inside portion **34** of the lid **33**. In the placing step S**5**, the unmelted opening portion **31**KM of the case body **31** is placed on the lower side GDH more than the circumferential edge upper surface **36**MO of the unmelted outer circumferential edge portion **36**M of the lid **33**. In addition, in the welding step S**6**, the multi-beam MB of the beamlet pattern PA**1** that provides more heat input to the unmelted opening portion **31** KM compared to the unmelted outer circumferential edge portion **36**M is irradiated to the unmelted outer circumferential edge portion **36**M and the unmelted opening portion **31** KM to laser-weld the outer circumferential edge portion **36** and the opening portion **31**K.

[0060] In the above manner, the opening portion **31**K of the case body **31** can be more deeply melted. Furthermore, when the unmelted outer circumferential edge portion **36**M of the lid **33** is melted, a part of molten metal originating from this unmelted outer circumferential edge portion **36**M moves toward the opening portion **31**K of the case body **31**, which is located at the relatively lower level and deeply melted, that is, to the outside LSO. Consequently, as easily understood by comparison with the comparative examples 1 and 2 (FIGS. **13** and **15**) which will be mentioned later, a molten portion MP, made of the molten metal MM resulting from melting of the unmelted opening portion **31**KM and the unmelted outer circumferential edge portion **36**M, hardly bulges, and thus the top part MPT of the molten portion MP can be generally horizontal and flat (see FIG. **6**). Accordingly, the reflected light RL of the multi-beam MB irradiated to the molten portion MP does not travel toward the insulation resin members **37** (not shown in FIG. **6**, see FIG. **4**) placed on the inside portion **34** of the lid **33**. This can reliably prevent or reduce the occurrence of thermal deterioration, such as scorch, of the insulation resin members **37**.

[0061] In the present embodiment, especially, the unmelted opening portion **31**KM of the case body **31** is placed on the lower side GDH more than the bottom **35**GB of the recessed groove **35**G, as described above. This configuration allows a part of the molten metal MM originating from the unmelted outer circumferential edge portion **36**M to move toward the opening portion **31**K located at a lower level, i.e., move to the outside LSO. Further, when seen from an unmelted groove outside portion **36**MG, which is a part of the unmelted outer circumferential edge portion **36**M of the lid **33** and located on the upper side GUH, and further on the outside LSO relative to the recessed groove **35**G, the recessed groove **35**G is present on the inside LSI and also the space is present on the outside LSO where the unmelted opening portion **31**KM of the case body **31** is not present. In this unmelted groove outside portion **36**MG, accordingly, the heat by irradiation of the multi-beam MB is less likely to transfer to both the inside LSI and the outside LSO. Even a small amount of heat input by the multi-beam MB can therefore reliably melt the unmelted groove outside portion **36**MG.

[0062] In the welding step S**6** in the present embodiment, at least the entirety of the unmelted groove outside portion **36**MG, which is a part of the unmelted outer circumferential edge portion **36**M of the lid **33**, is melted (see FIGS. **5** and **6**). This manner enables to easily determine whether the dimension of a weld bead width is appropriate or not based on whether or not the groove outside surface **35**GO of the recessed groove **35**G remains unmelted. Further, this can also stabilize the depth of welding penetration and the volume of the melted-solidified portion **40**.

[0063] The multi-beam MB of the beamlet pattern PA**1** shown in FIG. **5** can be said to include the outer-circumferential-edge-portion-side beamlets CBP and the opening-portion-side beamlets CBK, and additionally the single inner main beamlet CBM to be irradiated onto the boundary BD, at a position closer to the boundary center, i.e., on a boundary side BDPI, relative to the other beams CBP and CBP. When the multi-beam MB is moved forward in the first boundary extending direction BDE**1** indicated by a thick arrow in FIG. **5**, the outer-circumferential-edge-portion-side beamlets CBP include one or more (two in the beamlet pattern PA**1**) outer-circumferential-edge-portion-side leading beamlets CBPF that move earlier than the inner main beamlet CBM in the first boundary extending direction BDE**1** to melt the unmelted outer circumferential edge portion **36**M. The opening-portion-side beamlets CBK include one or more (two in the beamlet pattern PA**1**) opening-portion-side leading beamlets CBKF that move earlier than the inner main beamlet CBM in the first boundary extending direction BDE**1** to melt the unmelted opening portion **31**KM. Thus, the molten portion MP can be formed integrally across the boundary BD from the molten metal MM originating from the unmelted outer circumferential edge portion **36**M melted by the outer-circumferential-edge-portion-side leading beamlets CBPF and the molten metal MM originating from the unmelted opening portion **31**KM melted by the opening-portion-side leading beamlets CBKF. Then, it is possible to irradiate the single inner main beamlet CBM to a part of this molten portion MP corresponding to the boundary BD, later than the above leading beamlets CBPF and CBKF

[0064] Since the inner main beamlet CBM is irradiated to the molten portion MP made of the molten metal MM as above, laser welding can be performed while reliably preventing or reducing the occurrence of any defects, such as scorching of the electrode body **20**, caused by a so-called "laser pass-through" that the inner main beamlet CBM enter the case member **30** by passing through the boundary BD. It is further possible to form the melted-solidified portion **40** by deeply melting a part of the outer circumferential edge portion **36** of the lid **33** and a part of the opening portion **31**K of the case body **31**, near the boundary BD, by the inner main beamlet CBM (also see FIG. **6**).

[0065] As shown in FIG. **5**, the opening-portion-side beamlets CBK include one or more (two in the beamlet pattern PA**1**) opening-portion-side trailing beamlets CBKR that travel in the first boundary extending direction BDE**1** later than the inner main beamlet CBM to melt the unmelted opening portion **31**KM. These trailing beamlets can reduce or eliminate rapid cooling and solidification of the molten portion MP to prevent stress from remaining in the melted-solidified portion **40**.

[0066] As understood from FIG. **1**, in the welding step S**6**, the multi-beam MB has to be moved forward in the first boundary extending direction BDE**1** while maintaining the relationship of the beamlet pattern PA**1** of the multi-beam MB with the unmelted opening portion **31**KM and the

unmelted outer circumferential edge portion **36**M as shown in FIG. **5**. Then, depending on where the irradiation site HP is located on two long side sections and two short side sections of the rectangular ring-shaped boundary BD, the DOE used in the unillustrated laser welding device may be rotated or a region of the DOE through which a laser beam passes may be changed.

Modified Example 1

[0067] Next, a battery **110** and a method for manufacturing this battery **110** in a modified example 1 will be described referring to FIGS. **1** to **3**, **7**, and **8**. In the unwelded battery **10**M of the above-described embodiment, the circumferential edge upper surface **36**MO of the unmelted outer circumferential edge portion **36**M of the lid **33** is entirely flat (see FIG. **4**).

[0068] In contrast, an unwelded battery **110**M for manufacturing of the battery **110** in the modified example 1 differs from the unwelded battery **10**M only in that an unmelted outer circumferential edge portion **136**M of the lid **33** is provided with an outer-circumferential-edge inclined surface **136**MOS (see FIG. **7**). The following description will therefore be given with a focus on the above difference, and similar or identical parts to the embodiment will be omitted or simplified.

[0069] In the unwelded battery **110**M of the modified example 1, as described above, the shape of the unmelted outer circumferential edge portion **136**M which will form the outer circumferential edge portion **36** of the lid **33**, especially the shape of an unmelted groove outside portion **136**MG, is designed such that a circumferential edge upper surface **136**MO includes the outer-circumferential-edge inclined surface **136**MOS located more downward (toward the lower side GDH) on the outside LSO (left side in FIG. **7**). The outer-circumferential-edge inclined surface **136**MOS of the lid **33** may be formed by press forming.

[0070] In the placing step S**5**, the unmelted opening portion **31**KM of the case body **31** is placed on the lower side GDH more than, or below, an inclined-surface end **136**MOSE which is a part of the outer-circumferential-edge inclined surface **136**MOS and located on the outside LSO (see FIG. **7**).

[0071] In the welding step S**6**, then, the inclined-surface reflected light RLS of the laser beam irradiated to the outer-circumferential-edge inclined surface **136**MOS at least at the beginning of melting, of the multi-beam MB irradiated to the circumferential edge upper surface **136**MO of the unmelted outer circumferential edge portion **136**M, is allowed to travel to the outside LSO as indicated by a thick arrow in FIG. **7**. This inclined-surface reflected light RLS does not impinge again on the unmelted opening portion **31**KM of the case body **31** and does not travel toward the insulation resin member **37** (not shown in FIG. **7**, see FIG. **4**) on the inside LSI (rightward in FIG. **7**), and thus cause no thermal deterioration of the insulation resin member **37**. In addition, the reduced volume of the unmelted outer circumferential edge portion **136**M by formation of the outer-circumferential-edge inclined surface **136**MOS can further prevent bulging or rising of the molten portion MP made of the molten metal MM and the melted-solidified portion **140** resulting from solidification of the molten portion MP, as shown in FIG. **8**.

[0072] Furthermore, the unmelted opening portion **31**KM of the case body **31** is placed on the lower side GDH more than, or below, the inclined-surface end **136**MOSE of the circumferential edge upper surface **136**MO. This makes it easy for the molten metal MM, which results from melting of the unmelted outer circumferential edge portion **136**M of the lid **33**, to move toward the opening portion **31**K of the case body **31** located at a lower level, i.e., to the outside LSO, and further can reduce bulging or rising of the molten portion MP made of the molten metal MM to make the top part MPT of the molten portion MP generally horizontal and flat. Thus, it is possible to prevent or reduce the reflected light RL of the multi-beam MB from traveling toward the insulation resin member **37** on the inside LSI.

[0073] Also in the unwelded battery **110**M in the modified example 1, the unmelted opening portion **31**KM of the case body **31** is placed on the lower side GDH more than the bottom **35**GB of the recessed groove **35**G. This makes it easy for a part of the molten metal MM originating from the unmelted outer circumferential edge portion **136**M to move toward the opening portion **31**K at the lower level, i.e., to the outside LSO. Further, in the unmelted groove outside portion **136**MG located on the upper side GUH and the outside LSO of the recessed groove **35**G, in the unmelted outer circumferential edge portion **136**M of the lid **33**, heat is less likely to transfer to both the inside LSI and the outside LSO. Even a small amount of heat input by the multi-beam MB can therefore reliably melt the unmelted groove outside portion **136**MG.

Modified Example 2

[0074] Next, a battery **210** and a method for manufacturing this battery **210** in a modified example 2 will be described referring to FIGS. **1** to **3**, **9**, and **10**. In the unwelded battery **110**M of the modified example 1, the unmelted outer circumferential edge portion **136**M of the lid **33** is provided with the outer-circumferential-edge inclined surface **136**MOS, and the unmelted opening portion **31**KM of the case body **31** has the upward opening end face **31**KME facing to the upper side GUH, similar to the unwelded battery **10**M in the embodiment (see FIGS. **4** and **7**).

[0075] In contrast, an unwelded battery **210**M for manufacturing of the battery **210** in the modified example 2 differs from the unwelded battery **10**M in that an unmelted outer circumferential edge portion **236**M of the lid **33** is provided with an outer-circumferential-edge inclined surface **236**MOS as with the unwelded battery **110**M of the modified example 1, and additionally that an unmelted opening portion **231**KM of the case body **31** is made as an opening end inclined surface **231**KME facing to the upper side GUH and the outside LSO (see FIG. **9**). The following description will therefore be given with a focus on the above difference, and similar or identical parts to the embodiment will be omitted or simplified.

[0076] In the unwelded battery **210**M of the modified example 2, as described above, as with the unwelded battery **110**M of the modified example 1, the shape of the unmelted outer circumferential edge portion **236**M which will form the outer circumferential edge portion **36** of the lid **33**, especially the shape of the unmelted groove outer portion **236**MG, is designed such that a circumferential edge upper surface **236**MO includes an outer-circumferential-edge inclined surface **236**MOS located more downward (toward the lower side GDH) on the outside LSO (left side in FIG. **9**). In the placing step S**5**, the unmelted opening portion

231KM of the case body **31** is entirely placed on the lower side GDH more than, or below, an inclined-surface end **236**MOSE, which is a part of the outer-circumferential-edge inclined surface **236**MOS and located on the outside LSO.

[0077] In the welding step S**6**, then, the inclined-surface reflected light RLS of the laser beam irradiated to the outer-circumferential-edge inclined surface **236**MOS at least at the beginning of melting, of the multi-beam MB irradiated to the circumferential edge upper surface **236**MO of the unmelted outer circumferential edge portion **236**M, is allowed to travel to the outside LSO as indicated by a thick arrow in FIG. **9**. This inclined-surface reflected light RLS does not impinge again on the unmelted opening portion **231**KM of the case body **31** and does not travel toward the insulation resin member **37** (not shown in FIG. **9**, see FIG. **4**) on the inside LSI (rightward in FIG. **7**), and thus cause no thermal deterioration of the insulation resin member **37**. In addition, the reduced volume of the unmelted outer circumferential edge portion **236**M by formation of the outer-circumferential-edge inclined surface **236**MOS can further prevent bulging or rising of the molten portion MP made of the molten metal MM and the melted-solidified portion **240** resulting from solidification of the molten portion MP, as shown in FIG. **10**.

[0078] Furthermore, the unmelted opening portion **231**KM of the case body **31** is placed on the lower side GDH more than the inclined-surface end **236**MOSE of the outer-circumferential-edge inclined surface **236**MOS. This makes it easy for the molten metal MM, which results from melting of the unmelted outer circumferential edge portion **236**M of the lid **33**, to move toward the opening portion **31**K of the case body **31** located at a lower level, i.e., to the outside LSO, and further can reduce bulging or rising of the molten portion MP made of the molten metal MM and further reduce the reflected light RL of the multi-beam MB from traveling toward the insulation resin member **37** on the inside LSI.

[0079] In addition, in the unwelded battery **210**M of the modified example 2, the end face of the unmelted opening portion **231**KM of the case body **31** is formed as the opening end inclined surface **231**KME facing to the upper side GUH and the outside LSO. Thus, compared to the end face of the unmelted opening portion **231**KM, formed as an upward opening end face, it is possible to move more molten metal MM, which results from melting of the unmelted outer circumferential edge portion **236**M of the lid **33**, toward the opening portion **31**K of the case body **31** at a lower level, i.e., to the outside LSO, and reduce bulging or rising of the molten portion MP made of the molten metal MM and further reduce the reflected light RL of the multi-beam MB from traveling toward the insulation resin member **37** on the inside LSI.

[0080] In the unwelded battery **210**M of the modified example 2, the entire end face of the unmelted opening portion **231**KM of the case body **31** is formed as the opening end inclined surface **231**KME providing a sloping surface. However, as with the outer-circumferential-edge inclined surface **136**MOS of the unmelted outer circumferential edge portion **136**M of the lid **33**, for example, the end face of the unmelted opening portion **231**KM may be configured such that a part of the end face forms an upward opening end face facing to the upper side GUH and only a part of remaining area on the outside LSO forms an inclined surface.

[0081] In the unwelded battery **210**M of the modified example 2, unlike the embodiment and the modified example 1, the unmelted opening portion **231**KM of the case body **31** is not placed on the lower side GDH relative to the bottom **35**GB of the recessed groove **35**G. However, the unmelted opening portion **231**KM of the case body **31** may be placed on the lower side GDH relative to the bottom **35**GB of the recessed groove **35**Gin consideration of the range and the angle of the inclined surface: for example, only a part of the end face of the unmelted opening portion **231**KM is formed as an inclined surface. In this case, a part of the molten metal MM originating from the unmelted outer circumferential edge portion **236**M is easily moved toward the opening portion **31**K at a lower level, that is, to the outside LSO. Further, in the unmelted outer circumferential edge portion **236**M of the lid **33**, the unmelted groove outer portion **236** MG located on the upper side GUH and the outside LSO of the recessed groove **35**G can be more reliably melted.

Other Beamlet Patterns

[0082] For manufacturing of the batteries **10**, **110**, and **210** in the embodiment, modified examples 1 and 2, in the welding step S**6**, the multi-beam MB of the beamlet pattern PA**1** with seven beamlets CB indicated by solid lines in FIG. **5** is generated to perform laser welding. However, the available beamlet pattern for the multi-beam MB is not limited to the beamlet pattern PA**1** indicated by the solid lines in FIG. **5**. For example, a multi-beam MB of a beamlet pattern PA**2** with seven beamlets CB shown in FIG. **11** may be adopted.

[0083] The multi-beam MB of the beamlet pattern PA**2** shown in FIG. **11** also includes a single inner main beamlet CBM, as one of the beamlets CB, arranged at the center and provides a higher incident energy than other beamlets CB. The multi-beam MB further includes, as the other beamlets CB, one or more (two in the beamlet pattern PA**2**) outer-circumferential-edge-portion-side beamlets CBP, which are arranged on the inside LSI (a lower side in FIG. **11**) relative to the inner main beamlet CBM and to be irradiated to the unmelted outer circumferential edge portion **36**M, **136**M, **236**M to melt this unmelted outer circumferential edge portion **36**M, **136**M, **236**M and one or more (four in the beamlet pattern PA**2**) opening-portion-side beamlets CBK, which are arranged on the outside LSO (an upper side in FIG. **11**) and to be irradiated to the unmelted opening portion **31**KM, **231**KM to melt the unmelted opening portion **31**KM, **231**KM.

[0084] Six beamlets of the multi-beam MB of the beamlet pattern PA**2**, i.e., two outer-circumferential-edge-portion-side beamlets CBP and four opening-portion-side beamlets CBK, except for the inner main beamlet CBM, have the same incident energy as each other. Therefore, in the multi-beam MB of the beamlet pattern PA**2**, the total incident energy Ecbk (the sum of incident energies) of all of (four) opening-portion-side beamlets CBK is larger than the total incident energy Ecbp (the sum of incident energies) of all of (two) outer-circumferential-edge-portion-side beamlets CBP. Therefore, when irradiated to the irradiation site HP on the boundary BD, the multi-beam MB of the beamlet pattern PA**2** can apply more heat input to the unmelted opening portion **31**KM, **231**KM than to the unmelted outer circumferential edge portion **36**M, **136**M, **236**M.

[0085] Furthermore, also in the multi-beam MB of the beamlet pattern PA**2** shown in FIG. **11**, as with the multi-beam MB of the beamlet pattern PA**1** shown in FIG. **5**, the outer-circumferential-edge-portion-side beamlets CBP include one or more (one in the beamlet pattern PA**2**) outer-circumferential-edge-portion-side leading beamlets CBPF that is moved forward earlier than the inner main beamlet CBM and melt the unmelted outer circumferential edge portion **36**M and others. The opening-portion-side beamlets CBK include one or more (two in the beamlet pattern PA**2**) opening-portion-side leading beamlets CBKF that moves forward earlier than the inner main beamlet CBM and melt the unmelted opening portion **31**KM. Thus, the molten portion MP can be formed integrally across the boundary BD from the molten metal MM originating the unmelted outer circumferential edge portion **36**M and the unmelted opening portion **31**KM melted by the leading beamlets CBPF and CBKF in advance of the inner main beamlet CBM. The single inner main beamlet CBM can thus be irradiated to a part of the molten portion MP corresponding to the boundary BD. With the multi-beam MB of the beamlet pattern PA**2**, laser welding can also be performed while reliably preventing the occurrence of any defects caused by a so-called "laser pass-through". In addition, a part of the outer circumferential edge portion **36** of the lid **33** and a part of the opening portion **31**K of the case body **31**, near the boundary BD, can be more deeply melted and formed into the melted-solidified portion **40**, **140**, **240** (also see FIGS. **6**, **8**, and **10**).

Comparative Example 1

[0086] Next, a battery C**1** and a method for manufacturing the battery C**1** in a comparative example 1 will be described referring to FIGS. **1** to **3**, **12**, and **13**. For the unwelded battery **10**M of the embodiment, when the lid **33** is placed in the case body **31**, the unmelted opening portion **31**KM of the case body **31** is positioned on the lower side GDH more than the circumferential edge upper surface **36**MO of the unmelted outer circumferential edge portion **36**M of the lid **33** (see FIG. **4**). In addition, in the welding step S**6**, laser welding is performed using the multi-beam MB of the beamlet pattern PA**1** composed of seven beamlets CB, as shown with solid lines in FIG. **5**, to provide more heat input to the unmelted opening portion **31**KM compared to the unmelted outer circumferential edge portion **36**M, forming the molten portion MP that is hardly raised and has the generally horizontal and flat top part MPT, and the melted-solidified portion **40** resulting from solidification of the molten portion MP.

[0087] In contrast, the comparative example 1 shown in FIG. **12** employs an unwelded battery C**1**M including the case body **31** and the lid **33** identical to those of the unwelded battery **10**M of the embodiment; however, the unmelted opening portion **31**KM of the case body **31** and the outer circumferential edge portion **36** of the lid **33** are placed at the same height or level, that is, the upward opening end face **31**KME of the unmelted opening portion **31**KM of the case body **31** and the circumferential edge upper surface **36**MO of the unmelted outer circumferential edge portion **36**M of the lid **33** are positioned to be flush with each other.

[0088] In the comparative example 1, further, in the welding step S**6**, laser welding is performed using a multi-beam MB of a beamlet pattern PAC to obtain the battery C**1**. This beamlet pattern PAC is composed of nine beamlets CB arranged in an X-shape, which includes seven beamlets CB of the beamlet pattern PA**1** indicated by solid lines in FIG. **5** and additionally two beamlets CB indicated by broken lines in FIG. **5**, that is, two outer-circumferential-edge-portion-side trailing beamlets CBPR. This beamlet pattern PAC provides heat input with the same heat amount to the unmelted outer circumferential edge portion **36**M and the unmelted opening portion **31**KM.

[0089] In the battery C**1** of the comparative example 1, as shown in FIG. **13**, the molten portion MP and a melted-solidified portion C**1**A resulting from solidification of the molten portion MP are largely raised in a semi-circular cross section with its top part MPT located on the upper side GUH than the upward opening end face **31**KME and the circumferential edge upper surface **36**MO. Therefore, in the battery C**1**, unlike the batteries **10**, **110**, and **210** of the embodiment, comparative examples 1 and 2, part of the reflected light RL of the multi-beam MB irradiated to the molten portion MP travels toward the insulation resin member **37** (not illustrated in FIG. **13**, see FIG. **4**) placed in the inside portion **34** of the lid **33**, as indicated by arrows in FIG. **13**, causing scorching and other thermal deterioration of the insulation resin member **37**.

Comparative Example 2

[0090] Next, a battery C**2** and a method for manufacturing the battery C**2** in a comparative example 2 will be described referring to FIGS. **1** to **3**, **14**, and **15**. The embodiment employs the unwelded battery **10**M configured such that the lid **33** is placed in the case body **31** so that the unmelted opening portion **31**KM of the case body **31** is positioned on the lower side GDH more than the circumferential edge upper surface **36**MO of the unmelted outer circumferential edge portion **36**M of the lid **33** (see FIG. **4**). In addition, in the welding step S**6**, laser welding is performed using the multi-beam MB of the beamlet pattern PA**1** composed of seven beamlets CB, as shown with solid lines in FIG. **5**, to provide more heat input to the unmelted opening portion **31**KM compared to the unmelted outer circumferential edge portion **36**M, forming the molten portion MP that are hardly raised and has the generally horizontal and flat top part MPT, and the melted-solidified portion **40** resulting from solidification of the molten portion MP.

[0091] In contrast, the comparative example 2 shown in FIG. **14** employs an unwelded battery C**2**M including the case body **31** and the lid **33** placed in the same manner as in the unwelded battery **10**M of the above-mentioned embodiment. However, for laser welding on the unwelded battery C**2**M to produce the battery C**2**, the laser welding is performed using the multi-beam MB of the beamlet pattern PAC as in the comparative example 1, different from the embodiment using the multi-beam MB of the beamlet pattern PA**1** (see FIG. **5**). This beamlet pattern PAC is composed of nine beamlets CB arranged in an X-shape to provide heat input with the same heat amount to the unmelted outer circumferential edge portion **36**M and the unmelted opening portion **31**KM. Specifically, the comparative example 1 is different from the embodiment only in the beamlet pattern of the multi-beam to be irradiated.

[0092] In the battery C**2** of the comparative example 2, as shown in FIG. **15**, the molten portion MP and a melted-solidified portion C**2**A resulting from solidification of the molten portion MP are not as greatly raised as the molten portion MP and the melted-solidified portion C**1**A of the

battery C**1** of the comparative example 1, but are largely raised in a semi-circular cross section with its top part MPT located at the same level as the upward opening end face **31**KME and the circumferential edge upper surface **36**MO. Therefore, in the battery C**2** of the comparative example 2, unlike the batteries **10**, **110**, and **210** of the embodiment, comparative examples 1 and 2, part of the reflected light RL of the multi-beam MB irradiated to the molten portion MP travels toward the insulation resin member **37** (not illustrated in FIG. **15**, see FIG. **4**) placed in the inside portion **34** of the lid **33**, as indicated by arrows in FIG. **15**, causing scorching and other thermal deterioration of the insulation resin member **37**.

[0093] As understood from comparison of the battery **10** of the embodiment shown in FIG. **6** with the battery C**1** of the comparative example 1 shown in FIG. **13** and the battery C**2** of the comparative example 2 shown in FIG. **15**, as in the unwelded battery **10**M of the embodiment, the unmelted opening portion **31**KM of the case body **31** is placed on the lower side GDH more than the circumferential edge upper surface **36**MO of the outer circumferential edge portion **36** of the lid **33** (see FIG. **4**). In addition, more heat input is provided to the unmelted opening portion **31**KM compared to the unmelted outer circumferential edge portion **36**M to more deeply melt the opening portion **31**K of the case body **31**. The above manner allows part of the molten metal MM originating from the unmelted outer circumferential edge portion **36**M to move toward the opening portion **31**K of the case body **31** (the outside LSO) deeply melted at a relatively lower level. This can form the molten portion MP in a flat shape that is hardly raised, made of the molten metal MM resulting from melting of the unmelted opening portion **31**KM and the unmelted outer circumferential edge portion **36**M. It is accordingly found that this can reliably reduce the occurrence of thermal degradation of the resin member **37** caused by the reflected light RL of the multi-beam MB irradiated.

[0094] The foregoing embodiment, modified examples 1 and 2 are mere examples and give no limitation to the present disclosure. The present disclosure may be embodied in other specific forms without departing from the essential characteristics thereof.

REFERENCE SIGNS LIST

[0095] MB Multi-beam (Multi-beam laser beam)

[0096] CB Sub-beam

[0097] CBM Inner main beamlet

[0098] CBP Outer-circumferential-edge-portion-side beamlet

[0099] Ecbp Total incident energy (of outer-circumferential-edge-portion-side beamlets)

[0100] CBPF Outer-circumferential-edge-portion-side leading beamlet

[0101] CBK Opening-portion-side beamlet

[0102] Ecbk Total incident energy (of opening-portion-side beamlets)

[0103] CBKF Opening-portion-side leading beamlet

[0104] PA**1**, PA**2**, PAC Beam pattern

[0105] HP Irradiation site

[0106] MM Molten metal

[0107] MP Molten portion

[0108] **10**, **110**, **210**, C**1**, C**2** Battery (Power storage device)

[0109] **10**M, **110**M, **210**M, C**1**M, C**2**M Unwelded battery

[0110] **30** Case member

[0111] **31** Case body

[0112] **31**K Opening portion

[0113] **31**KM, **231**KM Unmelted opening portion

[0114] **31**KI Opening inner peripheral surface

[0115] **31**KME Upward opening end face (of unmelted opening portion)

[0116] **231**KME Opening end inclined surface (of unmelted opening portion)

[0117] **33** Lid

[0118] **33**O Lid upper surface

[0119] **34** Inside portion

[0120] **35**G Recessed groove

[0121] **35**GB Bottom

[0122] **36** Outer circumferential edge portion

[0123] **36**M, **136**M, **236**M Unmelted outer circumferential edge portion

[0124] **36**P Outer peripheral surface

[0125] **36**MO, **136**MO, **236**MO Circumferential edge upper surface (of unmelted outer circumferential edge portion)

[0126] **136**MOS, **236**MOS Outer-circumferential-edge inclined surface

[0127] **136**MOSE, **236**MOSE Inclined-surface end (of outer-circumferential-edge inclined surface)

[0128] **36**MG, **136**MG, **236**MG Unmelted groove outside portion

[0129] GUH Upper side

[0130] GDH Lower side

[0131] LSO Outside

[0132] LSI Inside

[0133] **37** Insulation resin member (Resin member)

[0134] **40**, **140**, **240**, C**1**A, C**2**A Melted-solidified portion

[0135] BD Boundary

[0136] BDE Boundary extending direction

[0137] BDE**1** First boundary extending direction

[0138] BDPI Boundary side

[0139] S**5** Placing step

[0140] S**6** Welding step

What is claimed is:

1. A method for manufacturing a power storage device comprising:

a case member made of metal; and

an electrode body housed in the case member,

the case member including:

a case body having a tube shape with an opening portion;

a lid having a flat plate shape, placed in the opening portion of the case body, the lid including:

an outer circumferential edge portion; and

an inside portion located more inside than the outer circumferential edge portion,

a recessed groove, which is depressed in a lid upper surface between the outer circumferential edge portion and the inside portion; and

an insulation resin member placed on the lid upper surface of the inside portion of the lid, and

the outer circumferential edge portion of the lid and the opening portion of the case body are welded to each other over an entire circumference via a melted-solidified portion formed by a part of the outer circumferential edge portion and a part of the opening portion that are melted together and then solidified,

wherein the method comprises:

placing the lid in an unmelted opening portion of the case body; and

welding the outer circumferential edge portion of the lid and the opening portion of the case body over the entire circumference,

wherein in placing the lid, the unmelted opening portion of the case body is placed on a lower side more than a circumferential edge upper surface of an unmelted outer circumferential edge portion of the lid, and

in welding, a multi-beam laser beam of a beamlet pattern that provides more heat input to the unmelted opening portion compared to the unmelted outer circumferential edge portion is irradiated to the unmelted outer circumferential edge portion and the unmelted opening portion to laser-weld the outer circumferential edge portion and the opening portion.

2. The method for manufacturing a power storage device, according to claim **1**, wherein the unmelted opening portion of the case body has an upward opening end face.

3. The method for manufacturing a power storage device, according to claim **1**, wherein

the circumferential edge upper surface of the unmelted outer circumferential edge portion of the lid includes an outer-circumferential-edge inclined surface located more downward on the outside, and

in placing the lid, the unmelted opening portion of the case body is placed on the lower side more than an inclined-surface end, which is a part of the outer-circumferential-edge inclined surface of the unmelted outer circumferential edge portion and located on the outside.

4. The method for manufacturing a power storage device according to claim **2**, wherein

the circumferential edge upper surface of the unmelted outer circumferential edge portion of the lid includes an outer-circumferential-edge inclined surface located more downward on the outside, and

in placing the lid, the unmelted opening portion of the case body is placed on the lower side more than an inclined-surface end, which is a part of the outer-circumferential-edge inclined surface of the unmelted outer circumferential edge portion and located on the outside.

5. The method for manufacturing a power storage device, according to claim **1**, wherein, in placing the lid, the unmelted opening portion of the case body is placed on the lower side more than a bottom of the recessed groove.

6. The method for manufacturing a power storage device according to claim **2**, wherein in placing the lid, the unmelted opening portion of the case body is placed on the lower side more than a bottom of the recessed groove.

7. The method for manufacturing a power storage device according to claim **3**, wherein in placing the lid, the unmelted opening portion of the case body is placed on the lower side more than a bottom of the recessed groove.

8. The method for manufacturing a power storage device according to claim **4**, wherein in placing the lid, the unmelted opening portion of the case body is placed on the lower side more than a bottom of the recessed groove.

9. The method for manufacturing a power storage device, according to claim **1**, wherein

in welding,

when the multi-beam laser beam is irradiated to a ring-shaped boundary between the unmelted opening portion and the unmelted outer circumferential edge portion and an irradiation site of the multi-beam laser beam is moved forward in a first boundary extending direction, which is one of boundary extending directions of the boundary,

the plurality of beamlets forming the multi-beam laser beam includes:

one or more outer-circumferential-edge-portion-side beamlets to be irradiated to the unmelted outer circumferential edge portion to melt the unmelted outer circumferential edge portion; and

one or more opening-portion-side beamlets to be irradiated to the unmelted opening portion to melty the unmelted opening portion, and

the beamlet pattern is a beamlet pattern that provides a larger sum of incident energies of all the opening-portion-side beamlets than a sum of incident energies of all the outer-circumferential-edge-portion-side beamlets.

10. The method for manufacturing a power storage device according to claim **2**, wherein

in welding,

when the multi-beam laser beam is irradiated to a ring-shaped boundary between the unmelted opening portion and the unmelted outer circumferential edge portion and an irradiation site of the multi-beam laser beam is moved forward in a first boundary extending direction, which is one of boundary extending directions of the boundary,

the plurality of beamlets forming the multi-beam laser beam includes:

one or more outer-circumferential-edge-portion-side beamlets to be irradiated to the unmelted outer circumferential edge portion to melt the unmelted outer circumferential edge portion; and

one or more opening-portion-side beamlets to be irradiated to the unmelted opening portion to melty the unmelted opening portion, and

the beamlet pattern is a beamlet pattern that provides a larger sum of incident energies of all the opening-portion-side beamlets than a sum of incident energies of all the outer-circumferential-edge-portion-side beamlets.

11. The method for manufacturing a power storage device according to claim **3**, wherein

in welding,

when the multi-beam laser beam is irradiated to a ring-shaped boundary between the unmelted opening portion and the unmelted outer circumferential edge portion and an irradiation site of the multi-beam laser beam is moved forward in a first boundary extending direction, which is one of boundary extending directions of the boundary,

the plurality of beamlets forming the multi-beam laser beam includes:

one or more outer-circumferential-edge-portion-side beamlets to be irradiated to the unmelted outer circumferential edge portion to melt the unmelted outer circumferential edge portion; and

one or more opening-portion-side beamlets to be irradiated to the unmelted opening portion to melty the unmelted opening portion, and

the beamlet pattern is a beamlet pattern that provides a larger sum of incident energies of all the opening-portion-side beamlets than a sum of incident energies of all the outer-circumferential-edge-portion-side beamlets.

12. The method for manufacturing a power storage device according to claim **4**, wherein

in welding,

when the multi-beam laser beam is irradiated to a ring-shaped boundary between the unmelted opening portion and the unmelted outer circumferential edge portion and an irradiation site of the multi-beam laser beam is moved forward in a first boundary extending direction, which is one of boundary extending directions of the boundary,

the plurality of beamlets forming the multi-beam laser beam includes:

one or more outer-circumferential-edge-portion-side beamlets to be irradiated to the unmelted outer circumferential edge portion to melt the unmelted outer circumferential edge portion; and

one or more opening-portion-side beamlets to be irradiated to the unmelted opening portion to melty the unmelted opening portion, and

the beamlet pattern is a beamlet pattern that provides a larger sum of incident energies of all the opening-portion-side beamlets than a sum of incident energies of all the outer-circumferential-edge-portion-side beamlets.

13. The method for manufacturing a power storage device according to claim **5**, wherein

in welding,

when the multi-beam laser beam is irradiated to a ring-shaped boundary between the unmelted opening portion and the unmelted outer circumferential edge portion and an irradiation site of the multi-beam laser beam is moved forward in a first boundary extending direction, which is one of boundary extending directions of the boundary,

the plurality of beamlets forming the multi-beam laser beam includes:

one or more outer-circumferential-edge-portion-side beamlets to be irradiated to the unmelted outer circumferential edge portion to melt the unmelted outer circumferential edge portion; and

one or more opening-portion-side beamlets to be irradiated to the unmelted opening portion to melty the unmelted opening portion, and

the beamlet pattern is a beamlet pattern that provides a larger sum of incident energies of all the opening-portion-side beamlets than a sum of incident energies of all the outer-circumferential-edge-portion-side beamlets.

14. The method for manufacturing a power storage device according to claim **6**, wherein

in welding,

when the multi-beam laser beam is irradiated to a ring-shaped boundary between the unmelted opening portion and the unmelted outer circumferential edge portion and an irradiation site of the multi-beam laser beam is moved forward in a first boundary extending direction, which is one of boundary extending directions of the boundary,

the plurality of beamlets forming the multi-beam laser beam includes:

one or more outer-circumferential-edge-portion-side beamlets to be irradiated to the unmelted outer circumferential edge portion to melt the unmelted outer circumferential edge portion; and

one or more opening-portion-side beamlets to be irradiated to the unmelted opening portion to melty the unmelted opening portion, and

the beamlet pattern is a beamlet pattern that provides a larger sum of incident energies of all the opening-portion-side beamlets than a sum of incident energies of all the outer-circumferential-edge-portion-side beamlets.

15. The method for manufacturing a power storage device according to claim **7**, wherein

in welding,

when the multi-beam laser beam is irradiated to a ring-shaped boundary between the unmelted opening portion and the unmelted outer circumferential edge portion and an irradiation site of the multi-beam laser beam is moved forward in a first boundary extending direction, which is one of boundary extending directions of the boundary,

the plurality of beamlets forming the multi-beam laser beam includes:

one or more outer-circumferential-edge-portion-side beamlets to be irradiated to the unmelted outer circumferential edge portion to melt the unmelted outer circumferential edge portion; and

one or more opening-portion-side beamlets to be irradiated to the unmelted opening portion to melty the unmelted opening portion, and

the beamlet pattern is a beamlet pattern that provides a larger sum of incident energies of all the opening-portion-side beamlets than a sum of incident energies of all the outer-circumferential-edge-portion-side beamlets.

16. The method for manufacturing a power storage device according to claim **8**, wherein

in welding,

when the multi-beam laser beam is irradiated to a ring-shaped boundary between the unmelted opening portion and the unmelted outer circumferential edge portion and an irradiation site of the multi-beam laser beam is moved forward in a first boundary extending direction, which is one of boundary extending directions of the boundary,

the plurality of beamlets forming the multi-beam laser beam includes:

one or more outer-circumferential-edge-portion-side beamlets to be irradiated to the unmelted outer circumferential edge portion to melt the unmelted outer circumferential edge portion; and

one or more opening-portion-side beamlets to be irradiated to the unmelted opening portion to melty the unmelted opening portion, and

the beamlet pattern is a beamlet pattern that provides a larger sum of incident energies of all the opening-portion-side beamlets than a sum of incident energies of all the outer-circumferential-edge-portion-side beamlets.

17. The method for manufacturing a power storage device, according to claim **9**, wherein

the plurality of beamlets forming the multi-beam laser beam includes a single inner main beamlet to be irradiated onto the boundary, on a boundary side* relative to the outer-circumferential-edge-portion-side beamlets and the opening-portion-side beamlets,

the one or more outer-circumferential-edge-portion-side beamlets include one or more outer-circumferential-edge-portion-side leading beamlets that move forward in the first boundary extending direction earlier than the inner main beamlet and melt the unmelted outer circumferential edge portion,

the one or more opening-portion-side beamlets include one or more opening-portion-side leading beamlets that move forward in the first boundary extending direction earlier than the inner main beamlet and melt the unmelted opening portion,

the inner main beamlet has a higher incident energy than an incident energy of each of the outer-circumferential-edge-portion-side beamlets and the opening-portion-side beamlets,

the inner main beamlet is irradiated to a molten portion integrally formed across the boundary from molten metal originating from the unmelted outer circumferential edge portion melted by the outer-circumferential-edge-portion-side leading beamlets and the unmelted opening portion melted by the opening-portion-side leading beamlets.

18. The method for manufacturing a power storage device, according to claim **9**, wherein, in welding, at least an unmelted groove outside portion located outside the recessed groove, as part of the unmelted outer circumferential edge portion of the lid, is entirely melted.

* * * * *