US012383287B2

(12) **United States Patent**
Stemniski et al.

(10) **Patent No.: US 12,383,287 B2**
(45) **Date of Patent: *Aug. 12, 2025**

(54) **SYSTEMS AND METHODS FOR INSTALLING AN ORTHOPEDIC IMPLANT**

(71) Applicant: **MicroPort Orthopedics Holdings Inc.**, Tiel (NL)

(72) Inventors: **Paul Stemniski**, Arlington, TN (US); **Sarah Lancianese**, Orlando, FL (US); **Richard Obert**, Poway, CA (US)

(73) Assignee: **MICROPORT ORTHOPEDICS HOLDINGS, INC.**, Tiel (NL)

(*) Notice: Subject to any disclaimer, the term of this patent is extended or adjusted under 35 U.S.C. 154(b) by 478 days.

This patent is subject to a terminal disclaimer.

(21) Appl. No.: **17/930,235**

(22) Filed: **Sep. 7, 2022**

(65) **Prior Publication Data**

US 2023/0000507 A1 Jan. 5, 2023

Related U.S. Application Data

(60) Continuation of application No. 16/841,788, filed on Apr. 7, 2020, now Pat. No. 11,464,527, which is a (Continued)

(51) **Int. Cl.**
A61B 17/17 (2006.01)
A61B 17/15 (2006.01)
(Continued)

(52) **U.S. Cl.**
CPC ..... ***A61B 17/1775*** (2016.11); ***A61B 17/15*** (2013.01); ***A61B 17/1633*** (2013.01); (Continued)

(58) **Field of Classification Search**
CPC . A61B 17/1775; A61B 17/15; A61B 17/1623; A61B 17/1682; A61B 17/1703; (Continued)

(56) **References Cited**

U.S. PATENT DOCUMENTS

3,314,420 A 4/1967 Smith et al.
3,605,123 A 9/1971 Hahn
(Continued)

FOREIGN PATENT DOCUMENTS

CN 1662186 8/2005
CN 101111197 1/2008
(Continued)

OTHER PUBLICATIONS

Andersson, et al., "Macintosh Arthroplasty in Rheumatoid Arthritis," Acta. Orthrop. Scand., 1974, pp. 245-259, 45(2).
(Continued)

Primary Examiner — Sameh R Boles
(74) *Attorney, Agent, or Firm* — DUANE MORRIS LLP

(57) **ABSTRACT**

A system includes a cartridge having an elongate body extending from a first end to a second end and having a top side and a bottom side. The cartridge defines a first hole adjacent to the first end that extends through the cartridge from the bottom side to the top side. The top side of the cartridge defines a pair of parallel slots that extend perpendicular with respect to a longitudinal axis of the cartridge. Each slot of the pair of parallel slots is equidistant from a central axis defined by the first hole.

16 Claims, 68 Drawing Sheets

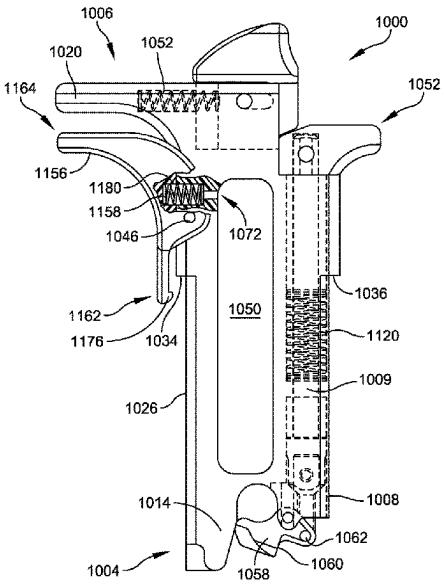

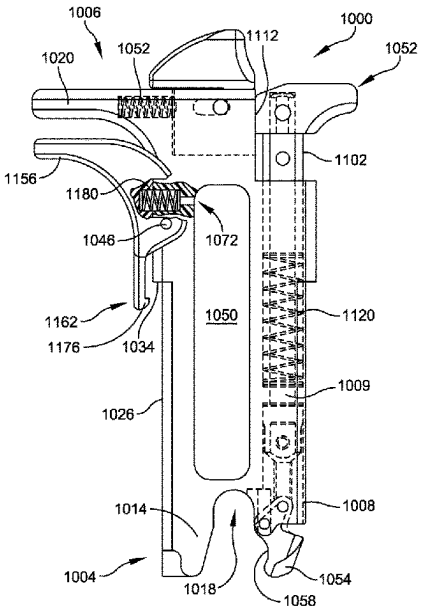

Related U.S. Application Data

continuation of application No. 15/933,924, filed on Mar. 23, 2018, now Pat. No. 10,646,238, which is a division of application No. 15/440,715, filed on Feb. 23, 2017, now Pat. No. 9,949,747, which is a continuation of application No. 14/039,874, filed on Sep. 27, 2013, now Pat. No. 9,675,365, which is a continuation of application No. 13/464,175, filed on May 4, 2012, now Pat. No. 8,808,297, which is a continuation-in-part of application No. 13/330,091, filed on Dec. 19, 2011, now Pat. No. 8,808,303, which is a continuation-in-part of application No. 12/711,307, filed on Feb. 24, 2010, now Pat. No. 9,113,914.

(60) Provisional application No. 61/482,657, filed on May 5, 2011, provisional application No. 61/425,054, filed on Dec. 20, 2010, provisional application No. 61/154,845, filed on Feb. 24, 2009.

(51) **Int. Cl.**

A61B 17/16	(2006.01)
A61F 2/42	(2006.01)
A61B 17/00	(2006.01)
A61B 17/56	(2006.01)
A61B 34/10	(2016.01)

(52) **U.S. Cl.**
CPC ***A61B 17/1682*** (2013.01); ***A61B 17/1703*** (2013.01); ***A61B 17/1717*** (2013.01); ***A61B 17/1728*** (2013.01); ***A61B 17/1739*** (2013.01); ***A61F 2/4202*** (2013.01); *A61B 2017/0046* (2013.01); *A61B 2017/00477* (2013.01); *A61B 2017/568* (2013.01); *A61B 2034/108* (2016.02)

(58) **Field of Classification Search**
CPC A61B 17/1717; A61B 17/1728; A61B 17/1739; A61F 2/4202
See application file for complete search history.

(56) **References Cited**

U.S. PATENT DOCUMENTS

3,798,679	A	3/1974	Ewald
3,808,606	A	5/1974	Tronzo
3,843,975	A	10/1974	Tronzo
3,855,638	A	12/1974	Pilliar
3,938,198	A	2/1976	Kahn et al.
3,987,499	A	10/1976	Scharbach et al.
4,052,753	A	10/1977	Dedo
4,055,862	A	11/1977	Farling
4,085,466	A	4/1978	Goodfellow et al.
4,098,626	A	7/1978	Graham et al.
4,203,444	A	5/1980	Bonnell et al.
4,213,816	A	7/1980	Morris
4,340,978	A	7/1982	Buechel et al.
4,368,040	A	1/1983	Weissman
4,436,684	A	3/1984	White
4,501,266	A	2/1985	McDaniel
4,502,161	A	3/1985	Wall
4,586,496	A	5/1986	Keller
4,594,380	A	6/1986	Chapin et al.
4,601,290	A	7/1986	Effron et al.
4,609,551	A	9/1986	Caplan et al.
4,627,853	A	12/1986	Campbell et al.
4,703,751	A	11/1987	Pohl
4,704,686	A	11/1987	Aldinger
4,715,860	A	12/1987	Amstutz et al.
4,721,104	A	1/1988	Kaufman et al.
4,759,350	A	7/1988	Dunn et al.
4,769,040	A	9/1988	Wevers
4,841,975	A	6/1989	Woolson
4,846,835	A	7/1989	Grande
4,865,607	A	9/1989	Witzel et al.
4,880,429	A	11/1989	Stone
4,936,862	A	6/1990	Walker et al.
4,979,949	A	12/1990	Matsen, III et al.
5,002,547	A	3/1991	Poggie et al.
5,041,138	A	8/1991	Vacanti et al.
5,059,216	A	10/1991	Winters
5,067,964	A	11/1991	Richmond et al.
5,122,144	A	6/1992	Bert et al.
5,129,908	A	7/1992	Petersen
5,133,759	A	7/1992	Turner
5,154,717	A	10/1992	Matsen, III et al.
5,162,430	A	11/1992	Rhee et al.
5,171,322	A	12/1992	Kenny
5,197,985	A	3/1993	Caplan et al.
5,206,023	A	4/1993	Hunziker
5,226,914	A	7/1993	Caplan et al.
5,234,433	A	8/1993	Bert et al.
5,250,050	A	10/1993	Poggie et al.
5,258,032	A	11/1993	Bertin
5,270,300	A	12/1993	Hunziker
5,288,797	A	2/1994	Khalil et al.
5,303,148	A	4/1994	Mattson et al.
5,306,311	A	4/1994	Stone et al.
5,314,482	A	5/1994	Goodfellow et al.
5,344,459	A	9/1994	Swartz
5,360,446	A	11/1994	Kennedy
5,365,996	A	11/1994	Crook
5,368,858	A	11/1994	Hunziker
5,370,692	A	12/1994	Fink et al.
5,380,332	A	1/1995	Ferrante
5,387,216	A	2/1995	Thornhill et al.
5,454,816	A	10/1995	Ashby
5,462,550	A	10/1995	Dietz et al.
5,468,787	A	11/1995	Braden et al.
5,474,559	A	12/1995	Bertin et al.
5,478,739	A	12/1995	Slivka et al.
5,486,180	A	1/1996	Dietz et al.
5,501,687	A	3/1996	Willert et al.
5,503,162	A	4/1996	Athanasiou et al.
5,520,695	A	5/1996	Luckman
5,523,843	A	6/1996	Yamane et al.
5,540,696	A	7/1996	Booth, Jr. et al.
5,542,947	A	8/1996	Treacy
5,554,190	A	9/1996	Draenert
5,556,432	A	9/1996	Kubein-Meesenburg et al.
5,571,205	A	11/1996	James
5,575,793	A	11/1996	Carls et al.
5,578,037	A	11/1996	Sanders et al.
5,593,450	A	1/1997	Scott et al.
5,597,379	A	1/1997	Haines et al.
5,601,563	A	2/1997	Burke et al.
5,613,970	A	3/1997	Houston et al.
5,616,146	A	4/1997	Murray
5,630,820	A	5/1997	Todd
5,632,745	A	5/1997	Schwartz
5,649,929	A	7/1997	Callaway
5,658,290	A	8/1997	Techeira
5,671,741	A	9/1997	Lang et al.
5,682,886	A	11/1997	Delp et al.
5,683,466	A	11/1997	Vitale
5,684,562	A	11/1997	Fujieda
5,688,282	A	11/1997	Baron et al.
5,728,162	A	3/1998	Eckhoff
5,735,277	A	4/1998	Schuster
5,749,874	A	5/1998	Schwartz
5,749,876	A	5/1998	Duvillier et al.
5,765,561	A	6/1998	Chen et al.
5,768,134	A	6/1998	Swaelens et al.
5,769,899	A	6/1998	Schwartz et al.
5,786,217	A	7/1998	Tuba et al.
5,798,924	A	8/1998	Eufinger et al.
5,800,438	A	9/1998	Tuke et al.
5,824,083	A	10/1998	Draenert
5,827,289	A	10/1998	Reiley et al.
5,830,216	A	11/1998	Insall et al.
5,835,619	A	11/1998	Morimoto et al.
5,842,477	A	12/1998	Naughton et al.
5,847,804	A	12/1998	Sarver et al.

(56) **References Cited**

U.S. PATENT DOCUMENTS

5,853,746	A	12/1998	Hunziker
5,860,981	A	1/1999	Bertin et al.
5,871,018	A	2/1999	Delp et al.
5,871,542	A	2/1999	Goodfellow et al.
5,871,546	A	2/1999	Colleran et al.
5,879,390	A	3/1999	Kubein-Meesenburg et al.
5,880,976	A	3/1999	DiGioia, III et al.
5,885,296	A	3/1999	Masini
5,885,297	A	3/1999	Matsen, III
5,885,298	A	3/1999	Herrington et al.
5,897,559	A	4/1999	Masini
5,899,859	A	5/1999	Votruba et al.
5,900,245	A	5/1999	Sawhney et al.
5,906,934	A	5/1999	Grande et al.
5,911,723	A	6/1999	Ashby et al.
5,916,220	A	6/1999	Masini
5,939,323	A	8/1999	Valentini et al.
5,961,523	A	10/1999	Masini
5,968,051	A	10/1999	Luckman et al.
5,972,385	A	10/1999	Liu et al.
5,995,738	A	11/1999	DiGioia, III et al.
6,001,895	A	12/1999	Harvey et al.
6,002,859	A	12/1999	DiGioia, III et al.
6,006,126	A	12/1999	Cosman
6,007,537	A	12/1999	Burkinshaw et al.
6,010,509	A	1/2000	Delgado et al.
6,013,081	A	1/2000	Burkinshaw et al.
6,013,103	A	1/2000	Kaufman et al.
6,046,379	A	4/2000	Stone et al.
6,056,754	A	5/2000	Haines et al.
6,056,756	A	5/2000	Eng et al.
6,057,927	A	5/2000	Levesque et al.
6,077,270	A	6/2000	Katz
6,082,364	A	7/2000	Balian et al.
6,090,144	A	7/2000	Letot et al.
6,093,204	A	7/2000	Stone
6,096,043	A	8/2000	Techiera et al.
6,102,916	A	8/2000	Masini
6,106,529	A	8/2000	Techiera
6,110,209	A	8/2000	Stone
6,120,541	A	9/2000	Johnson
6,126,690	A	10/2000	Ateshian et al.
6,139,578	A	10/2000	Lee et al.
6,156,069	A	12/2000	Amstutz
6,161,080	A	12/2000	Aouni-Ateshian et al.
6,187,010	B1	2/2001	Masini
6,200,606	B1	3/2001	Peterson et al.
6,203,546	B1	3/2001	MacMahon
6,203,576	B1	3/2001	Afriat et al.
6,205,411	B1	3/2001	DiGioia, III et al.
6,206,927	B1	3/2001	Fell et al.
6,214,369	B1	4/2001	Grande et al.
6,217,894	B1	4/2001	Sawhney et al.
6,219,571	B1	4/2001	Hargreaves et al.
6,224,632	B1	5/2001	Pappas et al.
6,235,060	B1	5/2001	Kubein-Meesenburg et al.
6,251,143	B1	6/2001	Schwartz et al.
6,254,639	B1	7/2001	Peckitt
6,277,151	B1	8/2001	Lee et al.
6,281,195	B1	8/2001	Rueger et al.
6,283,980	B1	9/2001	Vibe-Hansen et al.
6,296,646	B1	10/2001	Williamson
6,299,905	B1	10/2001	Peterson et al.
6,322,588	B1	11/2001	Ogle et al.
6,327,491	B1	12/2001	Franklin et al.
6,328,765	B1	12/2001	Hardwick et al.
6,344,043	B1	2/2002	Pappas
6,344,059	B1	2/2002	Krakovits et al.
6,352,558	B1	3/2002	Spector
6,358,253	B1	3/2002	Torrie et al.
6,365,405	B1	4/2002	Salzmann et al.
6,371,958	B1	4/2002	Overaker
6,373,250	B1	4/2002	Tsoref et al.
6,375,658	B1	4/2002	Hangody et al.
6,379,367	B1	4/2002	Vibe-Hansen et al.
6,382,028	B1	5/2002	Wooh et al.
6,383,228	B1	5/2002	Schmotzer
6,387,131	B1	5/2002	Miehlke et al.
6,429,013	B1	8/2002	Halvorsen et al.
6,443,988	B2	9/2002	Felt et al.
6,443,991	B1	9/2002	Running
6,444,222	B1	9/2002	Asculai et al.
6,459,927	B1	10/2002	Franklin et al.
6,459,948	B1	10/2002	Ateshian et al.
6,468,314	B2	10/2002	Schwartz et al.
6,478,799	B1	11/2002	Williamson
6,479,996	B1	11/2002	Hoogeveen et al.
6,510,334	B1	1/2003	Schuster et al.
6,520,964	B2	2/2003	Tallarida et al.
6,558,421	B1	5/2003	Fell et al.
6,560,476	B1	5/2003	Pelletier et al.
6,575,980	B1	6/2003	Robie et al.
6,620,168	B1	9/2003	Lombardo et al.
6,626,945	B2	9/2003	Simon et al.
6,626,948	B2	9/2003	Storer et al.
6,632,225	B2	10/2003	Sanford et al.
6,632,235	B2	10/2003	Weikel et al.
6,652,587	B2	11/2003	Felt et al.
6,673,077	B1	1/2004	Katz
6,679,917	B2	1/2004	Ek
6,712,856	B1	3/2004	Carignan et al.
6,738,657	B1	5/2004	Franklin et al.
6,905,514	B2	6/2005	Carignan et al.
6,916,341	B2	7/2005	Rolston
6,928,742	B2	8/2005	Broers et al.
6,932,842	B1	8/2005	Litschko et al.
6,942,667	B1	9/2005	Song
6,944,518	B2	9/2005	Roose
6,969,393	B2	11/2005	Pinczewski et al.
6,980,849	B2	12/2005	Sasso
6,988,015	B1	1/2006	Schopf et al.
6,993,374	B2	1/2006	Sasso
7,008,430	B2	3/2006	Dong et al.
7,058,439	B2	6/2006	Eaton et al.
7,060,074	B2	6/2006	Rosa et al.
7,104,997	B2	9/2006	Lionberger et al.
7,115,131	B2	10/2006	Engh et al.
7,117,027	B2	10/2006	Zheng et al.
7,141,053	B2	11/2006	Rosa et al.
7,184,814	B2	2/2007	Lang et al.
7,201,762	B2	4/2007	Green, Jr. et al.
7,217,276	B2	5/2007	Henderson et al.
7,239,908	B1	7/2007	Alexander et al.
7,245,697	B2	7/2007	Lang
7,282,054	B2	10/2007	Steffensmeier et al.
7,292,674	B2	11/2007	Lang
7,347,690	B2	3/2008	Jordan et al.
7,364,581	B2	4/2008	Michalowicz
7,377,924	B2	5/2008	Raistrick et al.
7,379,529	B2	5/2008	Lang
7,467,892	B2	12/2008	Lang et al.
7,468,075	B2	12/2008	Lang et al.
7,534,263	B2	5/2009	Burdulis, Jr. et al.
7,618,451	B2	11/2009	Berez et al.
7,747,305	B2	6/2010	Dean et al.
7,806,896	B1	10/2010	Bonutti
7,881,768	B2	2/2011	Lang et al.
7,981,158	B2	7/2011	Fitz et al.
7,983,777	B2	7/2011	Melton et al.
8,036,729	B2	10/2011	Lang et al.
8,062,302	B2	11/2011	Lang et al.
8,066,708	B2	11/2011	Lang et al.
8,083,745	B2	12/2011	Lang et al.
8,105,330	B2	1/2012	Fitz et al.
8,112,142	B2	2/2012	Alexander et al.
8,122,592	B2	2/2012	Burdulis, Jr. et al.
RE43,282	E	3/2012	Alexander et al.
8,715,362	B2	5/2014	Reiley et al.
2001/0001120	A1	5/2001	Masini
2001/0010023	A1	7/2001	Schwartz et al.
2001/0039455	A1	11/2001	Simon et al.
2002/0013626	A1	1/2002	Geisllich et al.
2002/0029038	A1	3/2002	Haines
2002/0045940	A1	4/2002	Giannelli et al.

(56) **References Cited**

U.S. PATENT DOCUMENTS

2002/0059049 A1 5/2002 Bradbury et al.
2002/0068979 A1 6/2002 Brown et al.
2002/0072821 A1 6/2002 Baker
2002/0079601 A1 6/2002 Russell et al.
2002/0082703 A1 6/2002 Repicci
2002/0087274 A1 7/2002 Alexander et al.
2002/0106625 A1 8/2002 Hung et al.
2002/0115647 A1 8/2002 Halvorsen et al.
2002/0120274 A1 8/2002 Overaker et al.
2002/0120281 A1 8/2002 Overaker
2002/0123817 A1 9/2002 Clasbrummel et al.
2002/0127264 A1 9/2002 Felt et al.
2002/0133230 A1 9/2002 Repicci
2002/0143402 A1 10/2002 Steinberg
2002/0151986 A1 10/2002 Asculai et al.
2002/0156150 A1 10/2002 Asculai et al.
2002/0156479 A1 10/2002 Schulzki et al.
2002/0173852 A1 11/2002 Felt et al.
2002/0183850 A1 12/2002 Felt et al.
2002/0198531 A1 12/2002 Millard et al.
2003/0028196 A1 2/2003 Bonutti
2003/0055500 A1 3/2003 Fell et al.
2003/0055501 A1 3/2003 Fell et al.
2003/0055502 A1 3/2003 Lang et al.
2003/0060882 A1 3/2003 Fell et al.
2003/0060883 A1 3/2003 Fell et al.
2003/0060884 A1 3/2003 Fell et al.
2003/0060885 A1 3/2003 Fell et al.
2003/0100907 A1 5/2003 Rosa et al.
2003/0100953 A1 5/2003 Rosa et al.
2003/0120347 A1 6/2003 Steinberg
2003/0158558 A1 8/2003 Horn
2003/0158606 A1 8/2003 Coon et al.
2003/0163137 A1 8/2003 Smucker et al.
2003/0173695 A1 9/2003 Monkhouse et al.
2003/0216669 A1 11/2003 Lang et al.
2003/0225457 A1 12/2003 Justin et al.
2003/0236521 A1 12/2003 Brown et al.
2004/0098133 A1 5/2004 Carignan et al.
2004/0102852 A1 5/2004 Johnson et al.
2004/0122521 A1 6/2004 Lee et al.
2004/0133276 A1 7/2004 Lang et al.
2004/0138754 A1 7/2004 Lang et al.
2004/0147927 A1 7/2004 Tsougarakis et al.
2004/0153079 A1 8/2004 Tsougarakis et al.
2004/0153162 A1 8/2004 Sanford et al.
2004/0153164 A1 8/2004 Sanford et al.
2004/0167390 A1 8/2004 Alexander et al.
2004/0167630 A1 8/2004 Rolston
2004/0193280 A1 9/2004 Webster et al.
2004/0204644 A1 10/2004 Tsougarakis et al.
2004/0204760 A1 10/2004 Fitz et al.
2004/0236424 A1 11/2004 Berez et al.
2004/0249386 A1 12/2004 Faoro
2005/0015153 A1 1/2005 Goble et al.
2005/0021039 A1 1/2005 Cusick et al.
2005/0043807 A1 2/2005 Wood
2005/0049603 A1 3/2005 Calton et al.
2005/0055028 A1 3/2005 Haines
2005/0085920 A1 4/2005 Williamson
2005/0107883 A1 5/2005 Goodfried et al.
2005/0107884 A1 5/2005 Johnson et al.
2005/0119664 A1 6/2005 Carignan et al.
2005/0143745 A1 6/2005 Hodorek et al.
2005/0148843 A1 7/2005 Roose
2005/0171545 A1 8/2005 Walsh et al.
2005/0171612 A1 8/2005 Rolston
2005/0192588 A1 9/2005 Garcia
2005/0216305 A1 9/2005 Funderud
2005/0234461 A1 10/2005 Burdulis Jr. et al.
2005/0267584 A1 12/2005 Burdulis et al.
2006/0052795 A1 3/2006 Burdulis et al.
2006/0111722 A1 5/2006 Bouadi
2006/0149283 A1 7/2006 May et al.
2006/0200162 A1 9/2006 Farling et al.
2006/0235421 A1 10/2006 Rosa et al.
2007/0015995 A1 1/2007 Lang
2007/0073305 A1 3/2007 Lionberger et al.
2007/0118141 A1 5/2007 Marchyn et al.
2007/0162025 A1 7/2007 Tornier et al.
2007/0198022 A1 8/2007 Lang et al.
2007/0203430 A1 8/2007 Lang et al.
2007/0233151 A1 10/2007 Chudik
2007/0233156 A1 10/2007 Metzger
2007/0276224 A1 11/2007 Lang et al.
2007/0293868 A1 12/2007 Delfosse et al.
2008/0004709 A1 1/2008 O'Neill et al.
2008/0015433 A1 1/2008 Alexander et al.
2008/0025463 A1 1/2008 Lang et al.
2008/0031412 A1 2/2008 Delfosse et al.
2008/0058613 A1 3/2008 Lang et al.
2008/0058945 A1 3/2008 Hajaj et al.
2008/0114370 A1 5/2008 Schoenefeld
2008/0170659 A1 7/2008 Lang et al.
2008/0195109 A1 8/2008 Hunter et al.
2008/0195216 A1 8/2008 Lang
2008/0219412 A1 9/2008 Lang
2008/0243127 A1 10/2008 Lang
2008/0255565 A1 10/2008 Fletcher
2008/0275452 A1 11/2008 Lang et al.
2008/0281328 A1 11/2008 Lang et al.
2008/0281329 A1 11/2008 Lang et al.
2008/0281426 A1 11/2008 Fitz et al.
2008/0287953 A1 11/2008 Sers
2009/0024131 A1 1/2009 Metzger et al.
2009/0043310 A1* 2/2009 Rasmussen A61B 17/1764
606/88
2009/0076371 A1 3/2009 Lang et al.
2009/0087276 A1 4/2009 Rose
2009/0088753 A1 4/2009 Aram et al.
2009/0088758 A1 4/2009 Bennett
2009/0099567 A1 4/2009 Zajac
2009/0131941 A1 5/2009 Park et al.
2009/0131942 A1 5/2009 Aker et al.
2009/0149964 A1 6/2009 May et al.
2009/0198244 A1 8/2009 Leibel
2009/0222014 A1 9/2009 Bojarski et al.
2009/0307893 A1 12/2009 Bojarski et al.
2010/0160917 A1 6/2010 Fitz et al.
2010/0262150 A1 10/2010 Lian
2010/0274251 A1 10/2010 Ranft
2010/0281678 A1 11/2010 Burdulis, Jr. et al.
2010/0298894 A1 11/2010 Bojarski et al.
2010/0305573 A1 12/2010 Fitz et al.
2010/0305574 A1 12/2010 Fitz et al.
2011/0066193 A1 3/2011 Lang et al.
2011/0071581 A1 3/2011 Lang et al.
2011/0213368 A1 9/2011 Fitz et al.
2011/0213373 A1 9/2011 Fitz et al.
2011/0213374 A1 9/2011 Fitz et al.
2011/0213377 A1 9/2011 Lang et al.
2011/0213427 A1 9/2011 Fitz et al.
2011/0213428 A1 9/2011 Fitz et al.
2011/0213429 A1 9/2011 Lang et al.
2011/0213430 A1 9/2011 Lang et al.
2011/0213431 A1 9/2011 Fitz et al.
2011/0218539 A1 9/2011 Fitz et al.
2011/0218542 A1 9/2011 Lian et al.
2011/0218584 A1 9/2011 Fitz et al.
2011/0230888 A1 9/2011 Lang et al.
2011/0238073 A1 9/2011 Lang et al.
2011/0313423 A1 12/2011 Lang et al.
2011/0319897 A1 12/2011 Lang et al.
2011/0319900 A1 12/2011 Lang et al.
2012/0029520 A1 2/2012 Lang et al.
2012/0041446 A1 2/2012 Wong et al.
2012/0066892 A1 3/2012 Lang et al.
2012/0071881 A1 3/2012 Lang et al.
2012/0071882 A1 3/2012 Lang et al.
2012/0071883 A1 3/2012 Lang et al.
2012/0072185 A1 3/2012 Lang et al.
2012/0101503 A1 4/2012 Lang et al.

(56) **References Cited**

U.S. PATENT DOCUMENTS

2012/0143197	A1	6/2012	Lang et al.
2012/0151730	A1	6/2012	Fitz et al.
2012/0158001	A1	6/2012	Burdulis, Jr. et al.

FOREIGN PATENT DOCUMENTS

DE	2306552	8/1974
DE	3516743	11/1986
DE	44 34 539	4/1996
DE	20303498	8/2003
DE	202008017199	3/2009
DE	202008017200	3/2009
EP	0377901	10/1989
EP	0528080	2/1993
EP	0530804	10/1993
EP	0626156	11/1994
EP	0704193	4/1996
EP	0896825	2/1999
EP	0938869	9/1999
EP	0613380	12/1999
EP	0993807	4/2000
EP	1074229	2/2001
EP	1077253	2/2001
EP	1120087	8/2001
EP	1129675	9/2001
EP	1132061	9/2001
EP	0732091	12/2001
EP	0814731	8/2002
EP	1234552	8/2002
EP	1234555	8/2002
EP	0809987	10/2002
EP	0833620	10/2002
FR	2819714	7/2002
GB	1451283	9/1976
GB	2291355	1/1996
GB	2348373	10/2000
JP	8-173465	7/1996
JP	9-206322	8/1997
JP	2002-102236	4/2002
JP	2008-537689	9/2008
WO	WO 87/02882	5/1987
WO	WO 90/009769	9/1990
WO	WO 93/004710	3/1993
WO	WO 93/009819	5/1993
WO	WO 93/025157	12/1993
WO	WO 95/027450	10/1995
WO	WO 95/028688	10/1995
WO	WO 95/030390	11/1995
WO	WO 95/032623	12/1995
WO	WO 96/024302	8/1996
WO	WO 97/025942	7/1997
WO	WO 97/026847	7/1997
WO	WO 97/027885	8/1997
WO	WO 97/038676	10/1997
WO	WO 98/012994	4/1998
WO	WO 98/20816	5/1998
WO	WO 98/030617	7/1998
WO	WO 98/32384	7/1998
WO	WO 99/002654	1/1999
WO	WO 99/008598	2/1999
WO	WO 99/008728	2/1999
WO	WO 99/042061	8/1999
WO	WO 99/047186	9/1999
WO	WO 99/051719	10/1999
WO	WO 99/056674	11/1999
WO	WO 00/009179	2/2000
WO	WO 00/015153	3/2000
WO	WO 00/035346	6/2000
WO	WO 00/048550	8/2000
WO	WO 00/059411	10/2000
WO	WO 00/074554	12/2000
WO	WO 01/010356	2/2001
WO	WO 01/017463	3/2001
WO	WO 01/019254	3/2001
WO	WO 01/035968	5/2001
WO	WO 01/045764	6/2001
WO	WO 01/068800	9/2001
WO	WO 01/070142	9/2001
WO	WO 01/091672	12/2001
WO	WO 02/000270	1/2002
WO	WO 02/000275	1/2002
WO	WO 02/002158	1/2002
WO	WO 02/022013	3/2002
WO	WO 02/022014	3/2002
WO	WO 02/023483	3/2002
WO	WO 02/034310	5/2002
WO	WO 02/036147	5/2002
WO	WO 02/096268	12/2002
WO	WO 03/007788	1/2003
WO	WO 03/037192	5/2003
WO	WO 03/047470	6/2003
WO	WO 03/051210	6/2003
WO	WO 03/055400	7/2003
WO	WO 2003065907	8/2003
WO	WO 04/043305	5/2004
WO	WO 04/049981	6/2004
WO	WO 05/051239	6/2005
WO	WO 05/051240	6/2005
WO	WO 06/060795	6/2006
WO	WO 06/127283	11/2006
WO	WO 07/041375	4/2007
WO	WO 2007/061983	5/2007
WO	WO 07/092841	8/2007
WO	WO 08/112996	9/2008
WO	WO 08/157412	12/2008
WO	WO 2009/001083	12/2008
WO	WO 09/111639	9/2009
WO	WO 2010/099142	9/2010
WO	WO 2010/121147	10/2010
WO	WO 2010120346	10/2010
WO	WO 2011/110374	9/2011

OTHER PUBLICATIONS

Argenson, et al., "Is There a Place for Patellofemoral Arthroplasty?, "Clinical Orthopaedics and Related Research No. 321, 1995, pp. 162-167.

Birnbaum, et al., "Computer-Assisted Orthopedic Surgery with Individual Templates and Comparison to Conventional Operation Method," Spine, Feb. 2001, pp. 365-369, vol. 26, No. 4.

Chelule, et al., "Computer Aided Design of Personalized Jigs in Total Knee Replacement," 3rd Annual Meeting of CAOS Int'l Proc., Jun. 18-21, 2003, pp. 58-59, Spain.

Dare, S., Bobyn, J., Drouin, G., Dussault, R., Gariepy, R., "Use of Computerized Tomography and Numerical Control Machining for the Fabrication of Custom Arthroplasty Prostheses." Second World Congress on Biomaterials, 10th Annual Meeting of the Society for Biomaterials, p. 233, Washington, D.C., Apr. 27-May 1, 1984.

De Winter, et al., "The Richards Type II Patellofemoral Arthroplasty," Acta Orthop Scand, 2001, pp. 487-490, 72(5).

Delp, et al., "A Graphics-Based Software System to Develop and Analyze Models of Musculoskeletal Structures," Comput. Biol. Med., 1995, pp. 21-34, vol. 25, No. 1.

Farrar, et al., "Computed Tomography Scan Scout Film for Measurement of Femoral Axis in Knee Arthroplasty," J. Arthroplasty, 1999, pp. 1030-1031, vol. 14, No. 8.

Final Official Action for U.S. Appl. No. 13/465,547, dated Feb. 26, 2014.

First Office Action for Japanese Patent Appln. No. 2011-552091, dated Oct. 25, 2013.

Froemel, et al., "Computer Assisted Template Based Navigation for Total Knee Replacement," Documents presented at CAOS on Jun. 17, 2001, 4 pages.

Hafez, et al., "Computer Assisted Total Knee Replacement: Could a Two-Piece Custom Template Replace the Complex Conventional Instrumentations?", 4th Annual Meeting of CAOS Int'l Proc., Jun. 16-19, 2004, pp. 63-64, Chicago.

Hafez, et al., "Computer-Assisted Total Hip Arthroplasty: The Present and the Future," Future Rheumatol., 2006, pp. 121-131, vol. 1.

(56) **References Cited**

OTHER PUBLICATIONS

Kim, et al., "Measurement of Femoral Neck Anteversion in 3D. Part 1: 3D Imaging Method," Med. and Biol. Eng. and Computing, 2000, pp. 603-609, vol. 38, No. 6.
Lam, et al., "X-Ray Diagnosis: A Physician's Approach," 1998, Title page and Table of Contents pages Only, ISBN 9813083247, Springer-Verlag publishers.
Lam. et al.. "VarusNalgus Alignment of the Femoral Component in Total Knee Arthroplasty," The Knee, 2003, pp. 237-241, vol. 10.
Lu, et al., "In Vitro Degradation of Porous poly(L-lactic acid) Foams," Biomaterials, Aug. 2000, pp. 1595-1605, 21(15).
Marler, et al., "Soft-Tissue Augmentation with Injectable Alginate and Synegeneic Fibroblasts," Plastic & Reconstructive Surgery, May 2000 pp. 2049-2058, 105(6).
PCT/US2010/025143, International Preliminary Report on Patentability and Written Opinion, Sep. 9, 2011.
Portheine, "Model-Based Operation Planning in Orthopedic Surgery," Thesis, Apr. 22, 2004, 90 pages, RWTH Aachen University, in German.
Portheine, "Model-Based Operation Planning in Orthopedic Surgery," Thesis, Apr. 22, 2004, 170 pages, RWTH Aachen University, English Translation with Certification.
Portheine, et al., "Potentials of CT-based Planning and Template-based Procedure in Hip and Knee Surgery," Orth. Prac., 2000, pp. 786-791, vol. 36, English Translation with Certification.
Portheine et al.. "Potentials of CT-based Planning and Template-based Procedure in Hip and Knee Surgery," Orth. Prac., 2000, pp. 786-791, vol. 36, in German.
Radermacher, "Computer Assisted Matching of Planning and Execution in Orthopedic Surgery," Slide Presentation, Nov. 29, 1993, 22 pages.
Radermacher, "Computer-Based Decision Support in the Selection and Evaluation of Contact Surfaces for Manual Referencing," Lecture presented at Helmholtz Meeting '98 and OSS '98, 7 pages, in German.
Radermacher, "Computer-Based Decision Support in the Selection and Evaluation of Contact Surfaces for Manual Referencing," Lecture presented at Helmholtz Meeting '98 and OSS '98, 8 pages, English Translation with Certifications.
Radermacher, "Image Guided Orthopedic Surgery with Individual Templates," Helmholtz-Institute for Biomed. Eng., 1997, 2 pages.
Radermacher, "Template Based Navigation—An Efficient Technique for Hip and Knee Surgery," CAOS First Asian Meet, Mar. 27-28, 2004, pp. 45-50, India.
Radermacher, et al., "Computer Assisted Matching of Planning and Execution in Orthopedic Surgery," IEEE, EMBS, 1993, pp. 946-947, San Diego.
Radermacher, et al., "Computer Integrated Advanced Orthopedics (CIAO)," 2nd European Conference on Eng. and Med., Apr. 26, 1993, 12 pages.
Radermacher, et al., "Computer Integrated Surgery—Connecting Planning and Execution of Surgical Intervention in Orthopedics," Surgical Therapy Technology, Helmholtz-Institut Aachen Research Report, 1991-1992, pp. 187, 196-202.
Radermacher, et al., "Computer-Assisted Operative Interventions in Orthopedics—Are There Prospects for Endoprosthetics as Well?", Prac. Ortho., 1997, pp. 149-164, vol. 27, in German.
Radermacher, et al., "Computer-Assisted Planning and Operation in Orthopedics," Orth. Prac. 36th Year, Dec. 2000, pp. 731-737, English Translation with Certification.
Radermacher, et al., "Surgical Therapy Technology," Helmholtz-Institut Aaachen Research Report, 1993-1994, pp. 189-219.
Radermacher. et al.. "Computer-Assisted Operative Interventions in Orthopedics—Are There Prospects for Endoprosthetics as Well?". Prac. Ortho., 1997, pp. 1-17, vol. 27, English Translation with Certification.
Radermacher. et al.. "Computer-Assisted Planning and Operation in Orthopedics," Orth. Prac. 36th Year, Dec. 2000, pp. 731-737, in German.
Rau, et al., "Small and Neat," Medical Tech. Int'l, 1993-94, pp. 65, 67 and 69.
Schkommadau, et al., "Clinical Application of Individual Templates for Pedicle Screw Placement in Comparison to Computer Navigation," Poster presented at CAOS, Feb. 18, 2000, 1 page.
Schkommadau, et al., "Clinical Experience With the Individual Template Technique," Orth. Prac., 2001, pp. 19-22, vol. 37, No. 1, in German.
Schkommadau, et al., "Clinical Experience With the Individual Template Technique," Orth. Prac., 2001, pp. 19-22, vol. 37, No. 1, English Translation with Certification.
Seel, et al., "Three-Dimensional Planning and Virtual Radiographs in Revision Total Hip Arthroplasty for Instability," Clinical Orthopaedics and Related Research, Jan. 2006, pp. 35-38, No. 442.
Slone, et al., "Body CT: a Practical Approach," 1999, Title page and Table of Contents pages Only, ISBN 007058219, McGraw-Hill.
Staudte, et al., "Computer-Assisted Operation Planning and Technique in Orthopedics," North Rhine-Westphalia Acad. for Sciences, Lecture N.444, 2000, 17 pages, ISSN 0944-8799, in German.
Staudte, et al., "Computer-Assisted Operation Planning and Technique in Orthopedics," North Rhine-Westphalia Acad. for Sciences, Lecture N.444, 2000, 34 pages, ISSN 0944-8799, English Translation with Certification.
Stauffer, et al., "The Macintosh Prosthesis. Prospective Clinical and Gait Evaluation," Arch. Surg., 1975, pp. 717-720, 110(6).
Stout, et al., "X-RAY Structure Determination: A Practical Guide," 1989, Title page and Table of Contents pages Only, ISBN 0471607118, John Wiley & Sons.
Tamez-Pena, et al., "MRIIsotropic Resolution Reconstruction from Two Orthogonal Scans," Proceedings of the SPIE—The International Society for Optical Engineering SOIE-OMT, 2001, pp. 87-97, vol. 4322.
Testi, et al., "Border Tracing Algorithm Implementation for the Femoral Geometry Reconstruction," Camp. Meth. and Programs in Biomed., 2001, pp. 175-182, vol. 65.
Vandeberg, et al., "Assessment of Knee Cartilage in Cadavers with Dual-Detector Spiral CT Arthrography and MR Imaging," Radiology, Feb. 2002, pp. 430-435, 222(2).
Wiese, et al., "Biomaterial Properties and Biocompatibility in Cell Culture of a Novel Self-Inflating Hydrogel Tissue Expander," J. Biomedical Materials Research Part A, Nov. 2000, pp. 179-188, 54(2).
Woolson, S., Fellingham, L., Dev, P., and Vassiliadis, A., "Three Dimensional Imaging of Bone from Analysis of Computed Tomography Data." Orthopedics, vol. 8, No. 10, pp. 1269-1273, Oct. 1985.
Yusof, et al., "Preparation and Characterization of Chitin Beads as a Wound Dressing Precursor," J. Biomedical Materials Research Part A, Oct. 2000, pp. 59-68, 54(1).
First Examination Report issued in connection with corresponding Australian Patent Application No. 2018204063, Jul. 10, 2019, 2 pages.
Examination Report issued in connection with corresponding Indian Patent Application No. 2004/KOLNP/2013, Nov. 27, 2018, 7 pages.
First Office Action issued in connection with corresponding Chinese Patent Application No. 201610973637.8.
First Examination Report issued in connection with corresponding Australian Patent Application No. 201926183, Dec. 21, 2020, 4 pages.
Second Examination Report issued in connection with corresponding Australian Patent Application No. 2019261830, May 4, 2021, 9 pages.

* cited by examiner

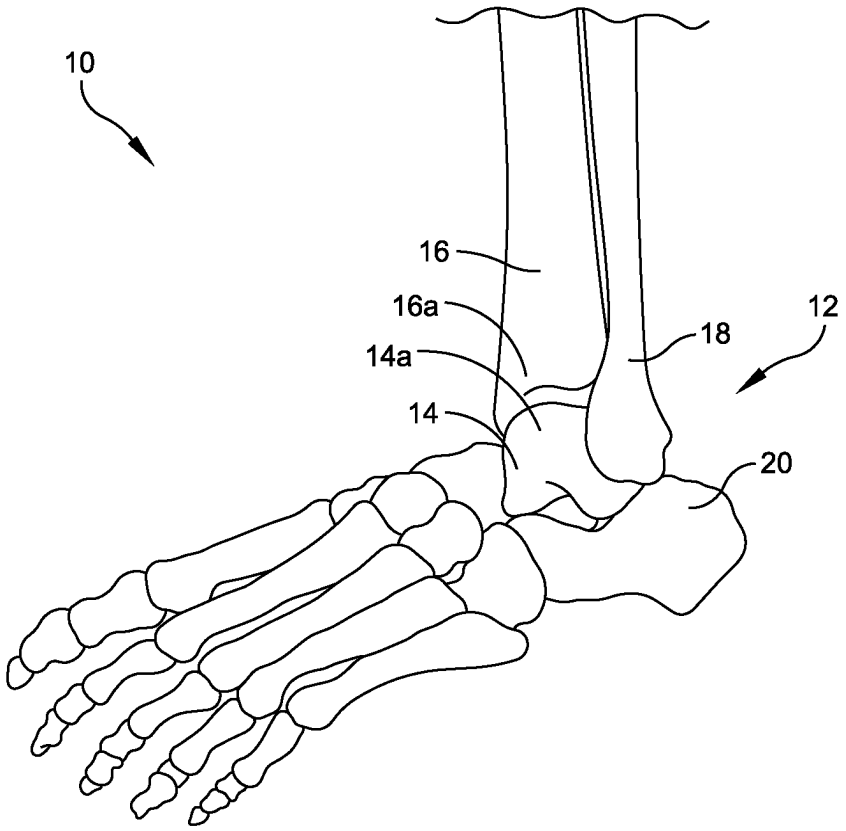

FIG. 1

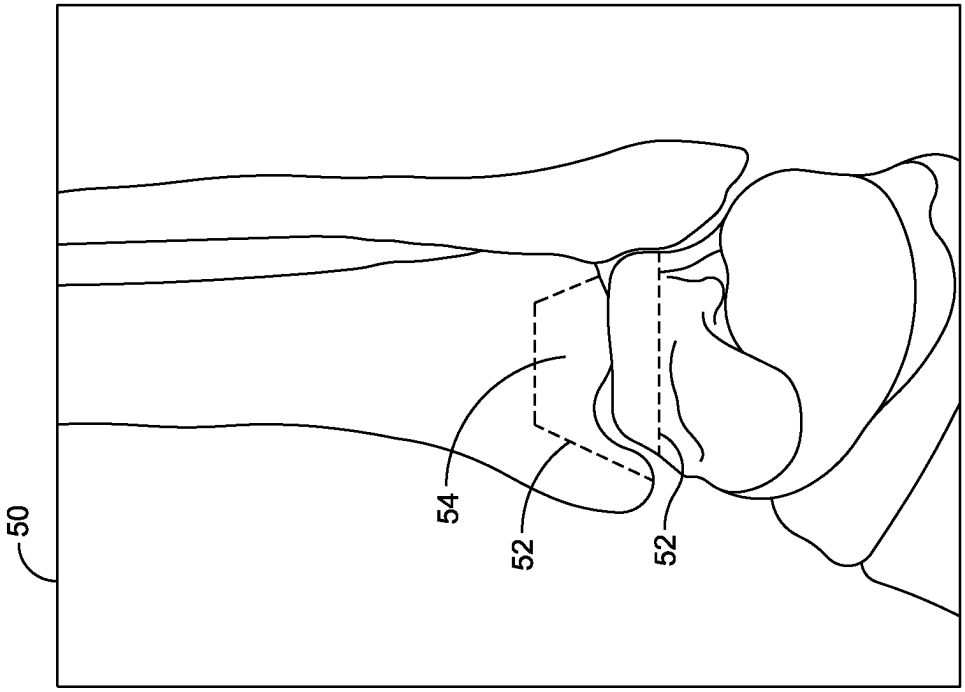

FIG. 2A

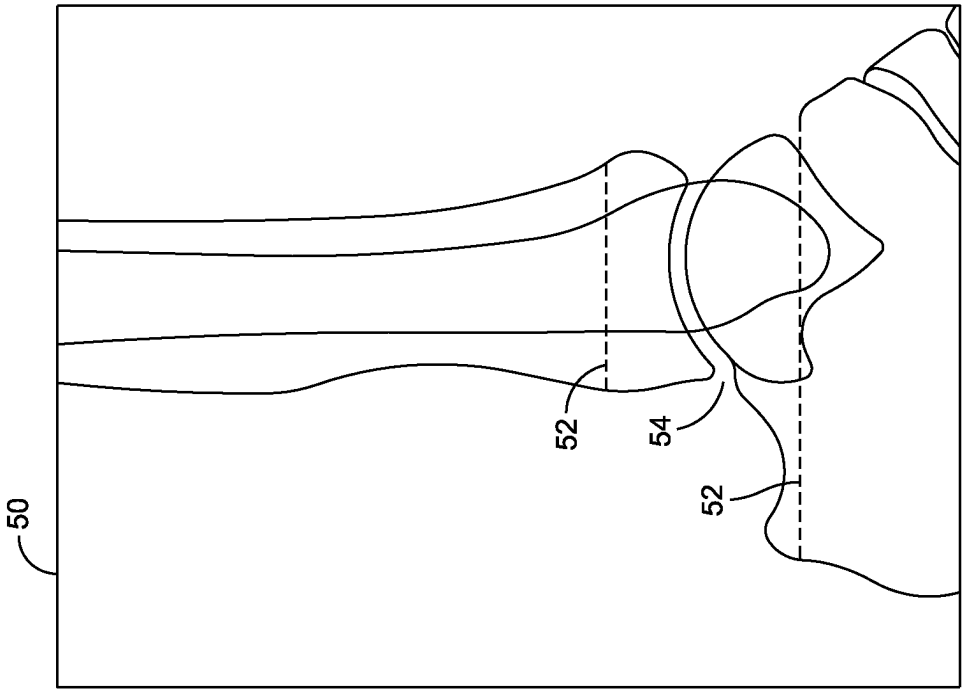

FIG. 2B

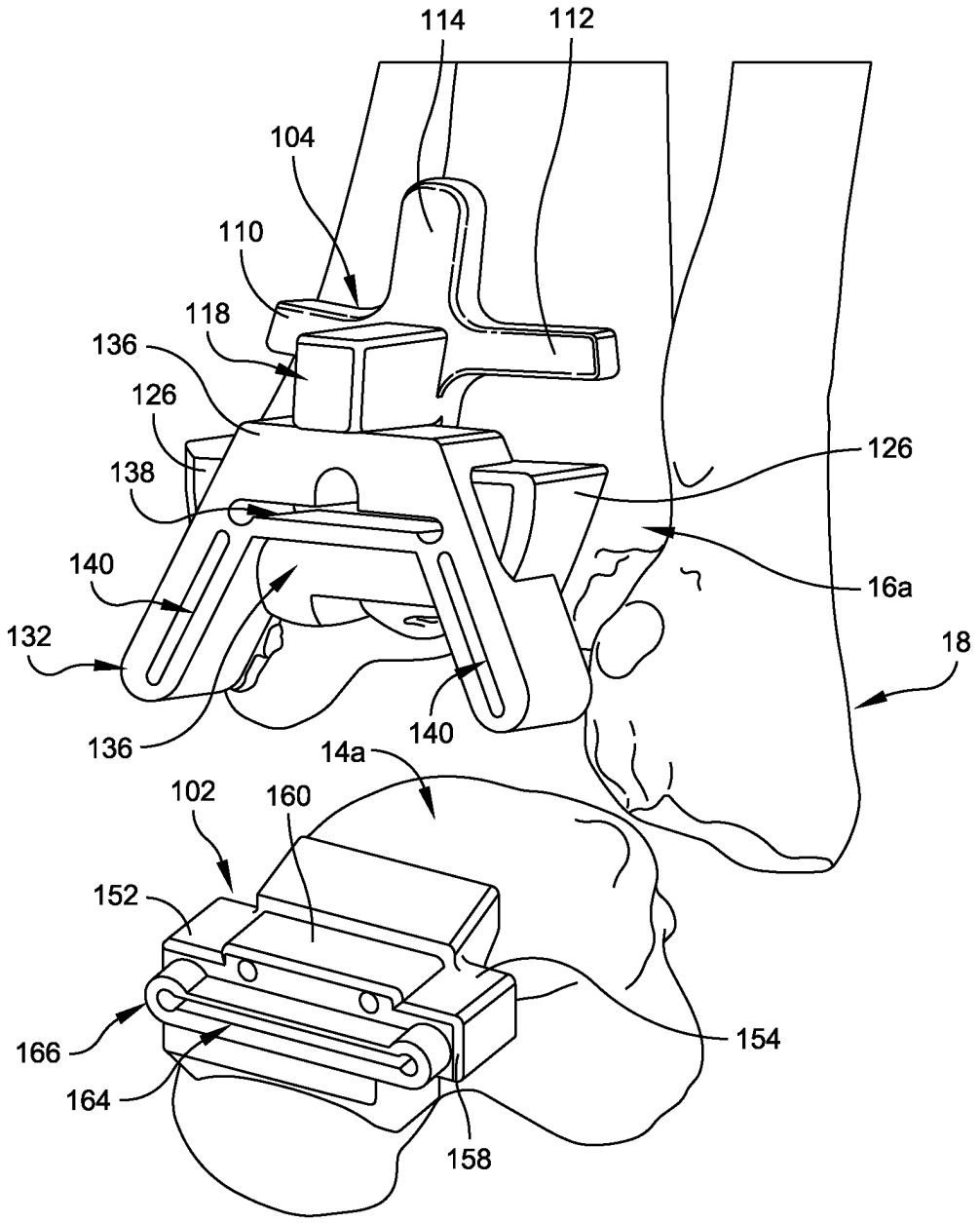
114
112
104
110
118
136
126
138
140
132
136
140
126
16a
18
14a
102
160
152
166
164
158
154

FIG. 3

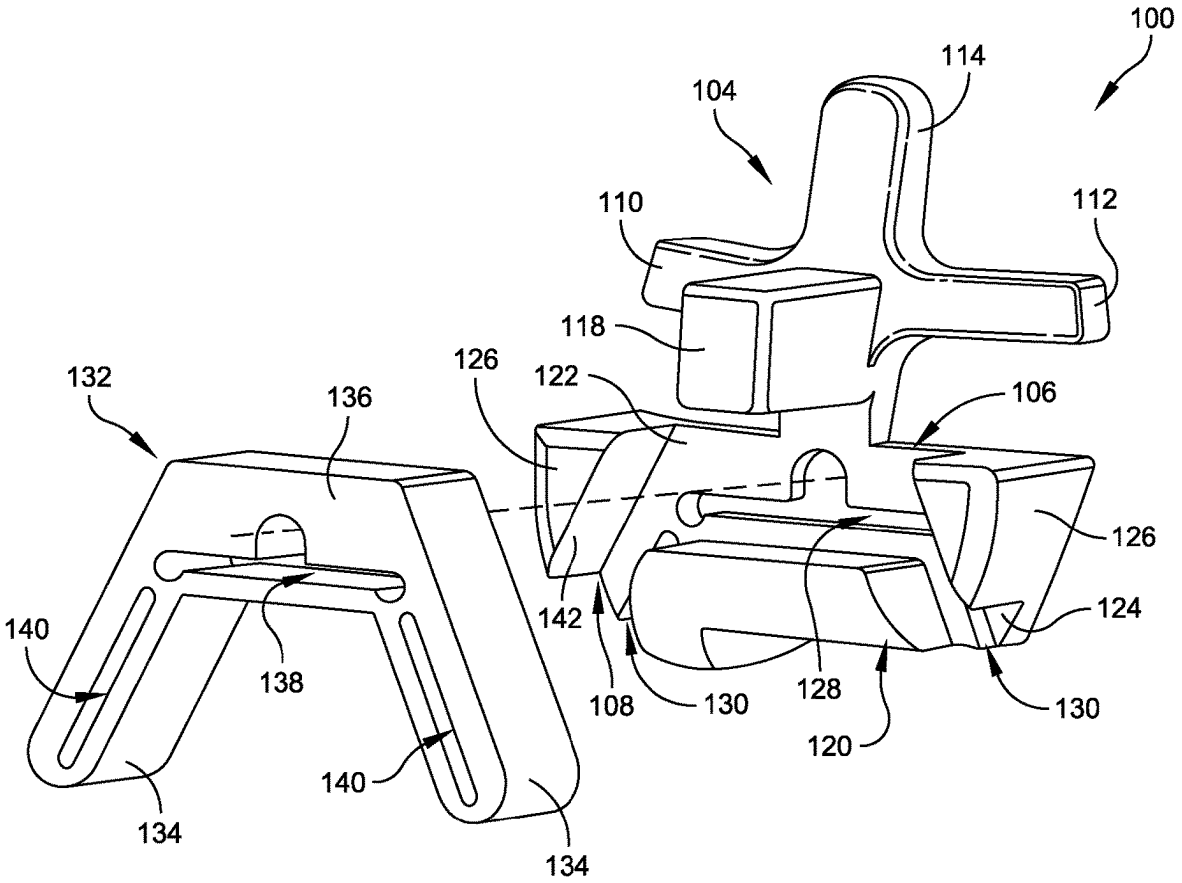
100
114
104
110
112
118
126
122
106
132
136
126
124
140
138
142
108
130
128
130
120
140
134
134

FIG. 4

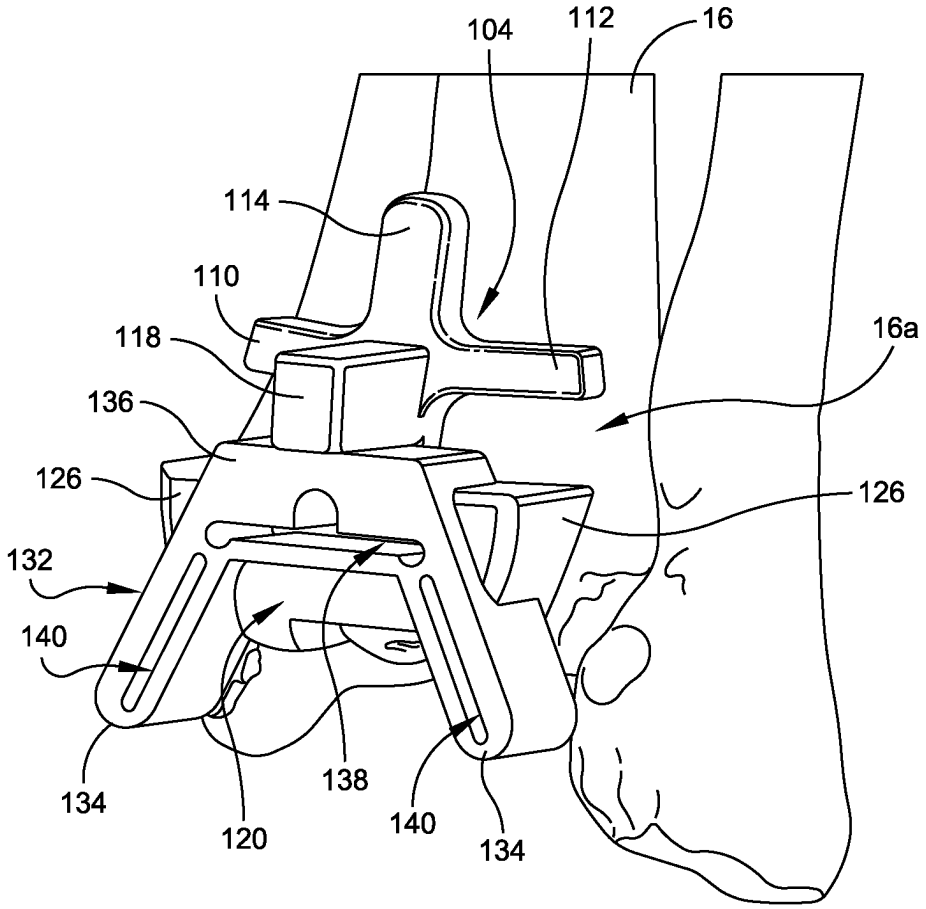
104
112
16
114
110
118
16a
136
126
126
132
140
134
120
138
140
134

FIG. 5

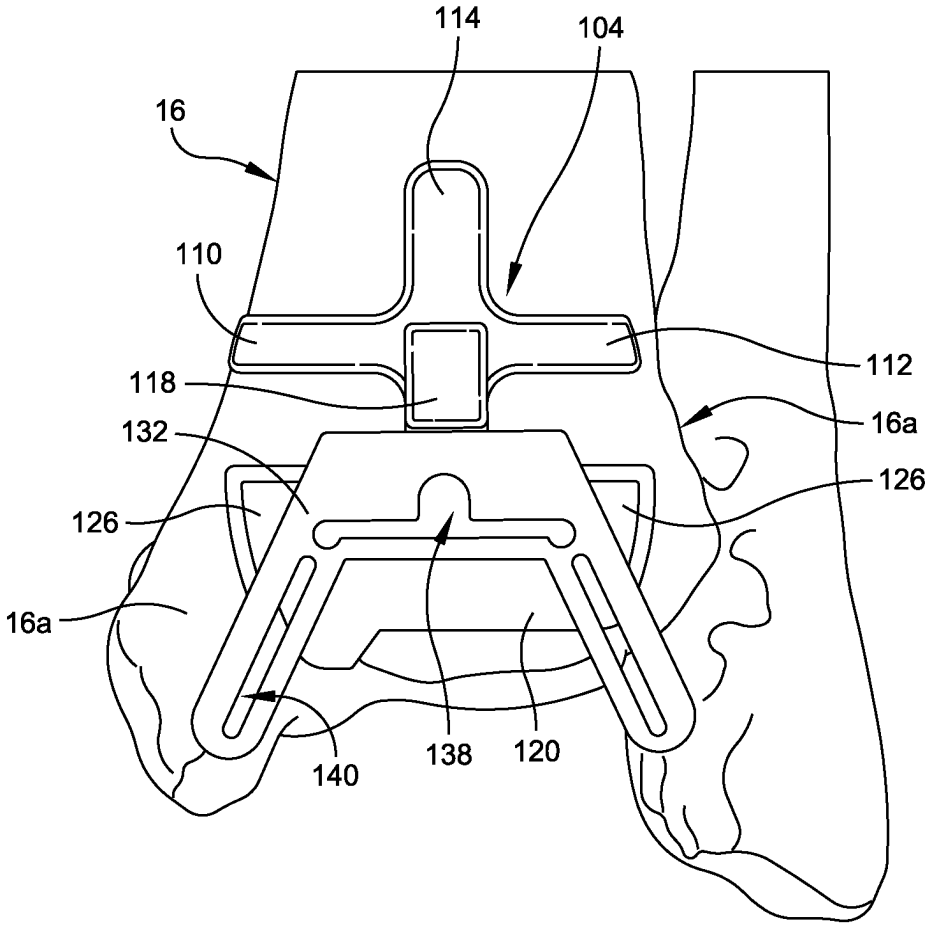

FIG. 6

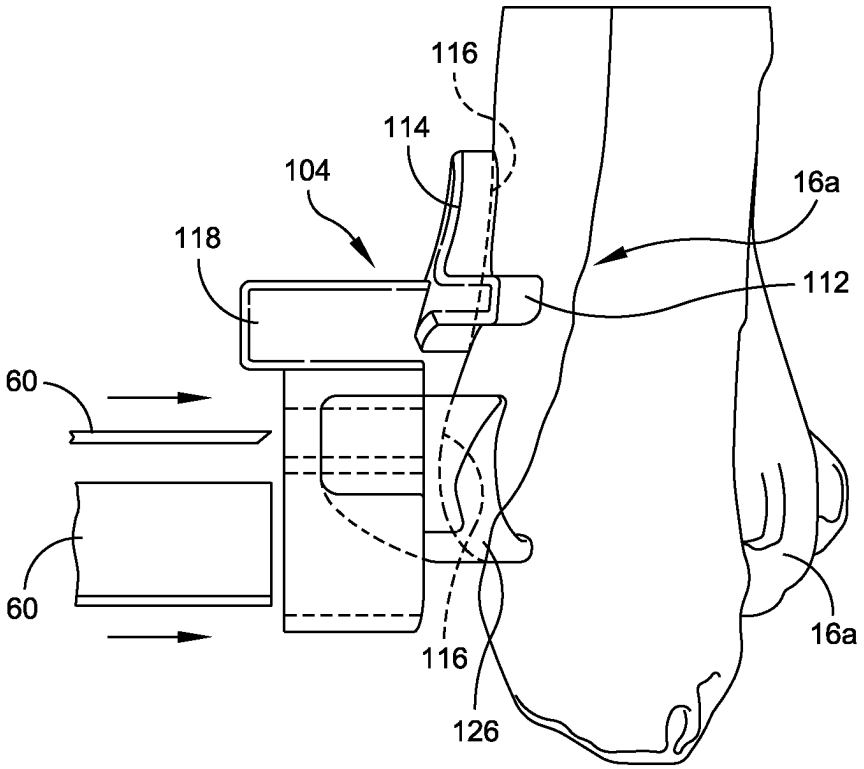

FIG. 7

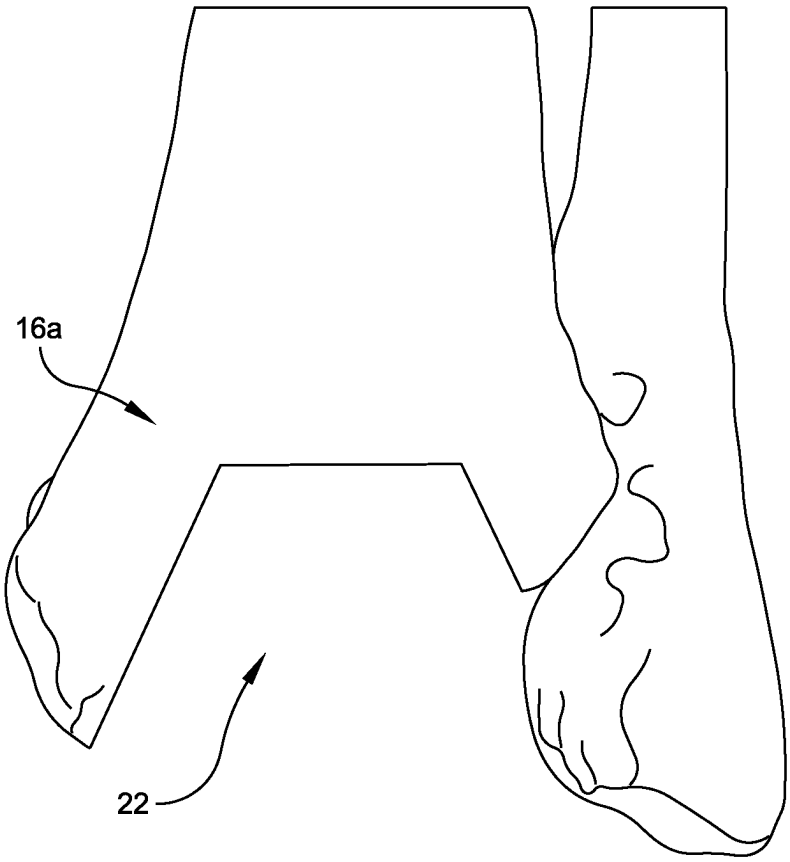

FIG. 8

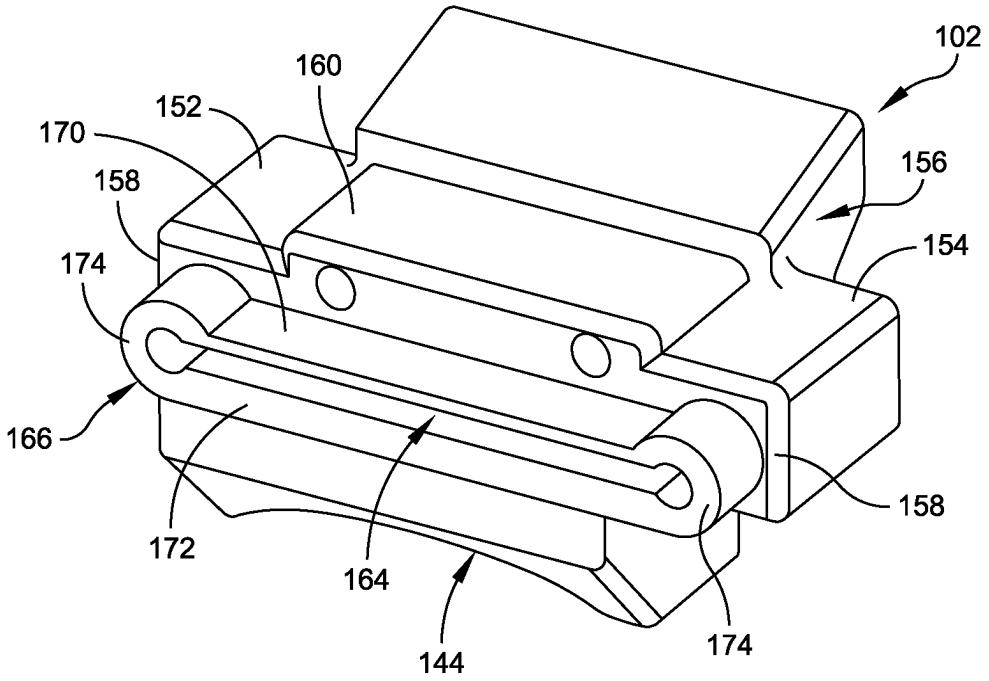

FIG. 9

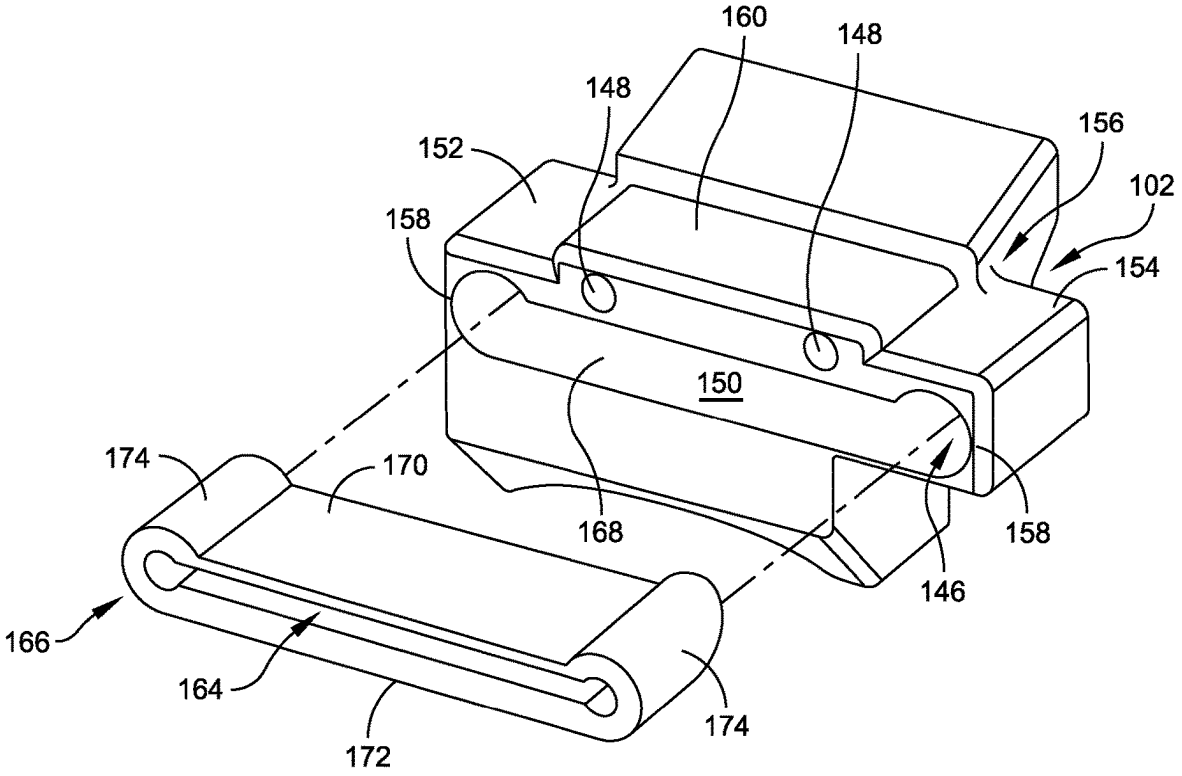
160
148
148
152
156
102
158
154
150
174
170
168
158
146
166
164
174
172

FIG. 10

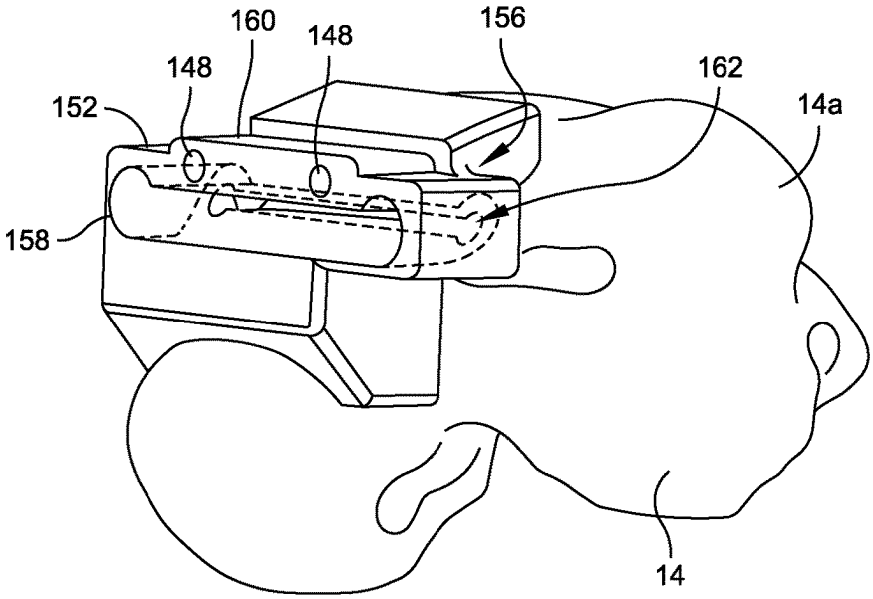
160
148
156
148
162
152
14a
158
14

FIG. 11

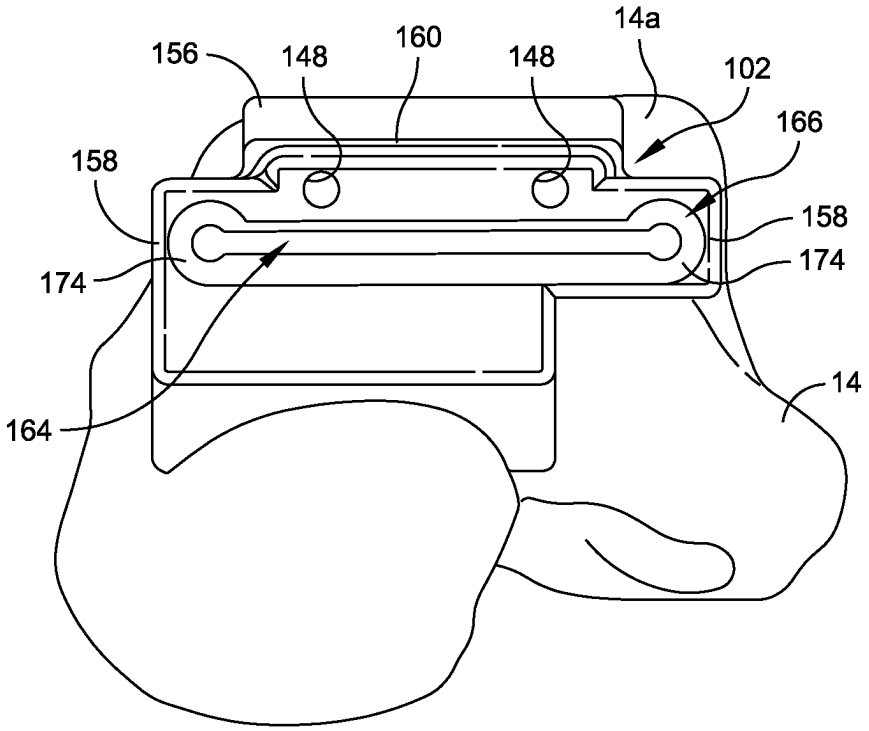
156
148
160
148
14a
102
166
158
158
174
174
14
164

FIG. 12

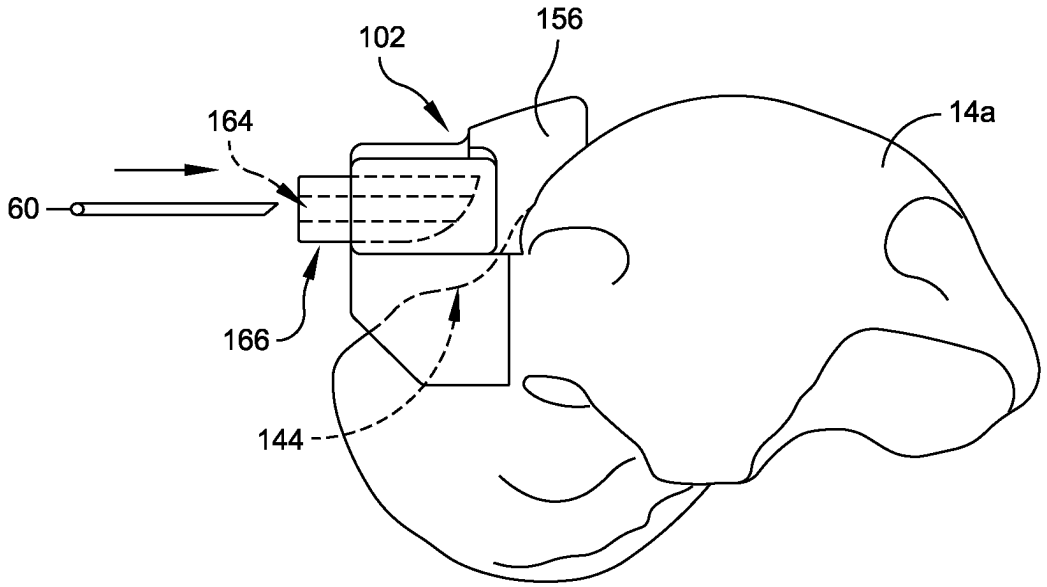
102
156
164
14a
60
166
144

FIG. 13

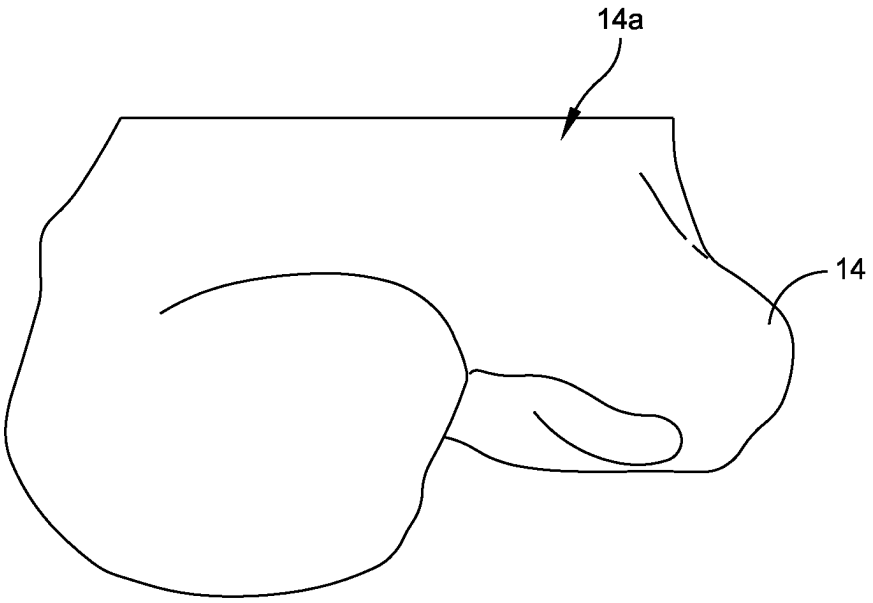

FIG. 14

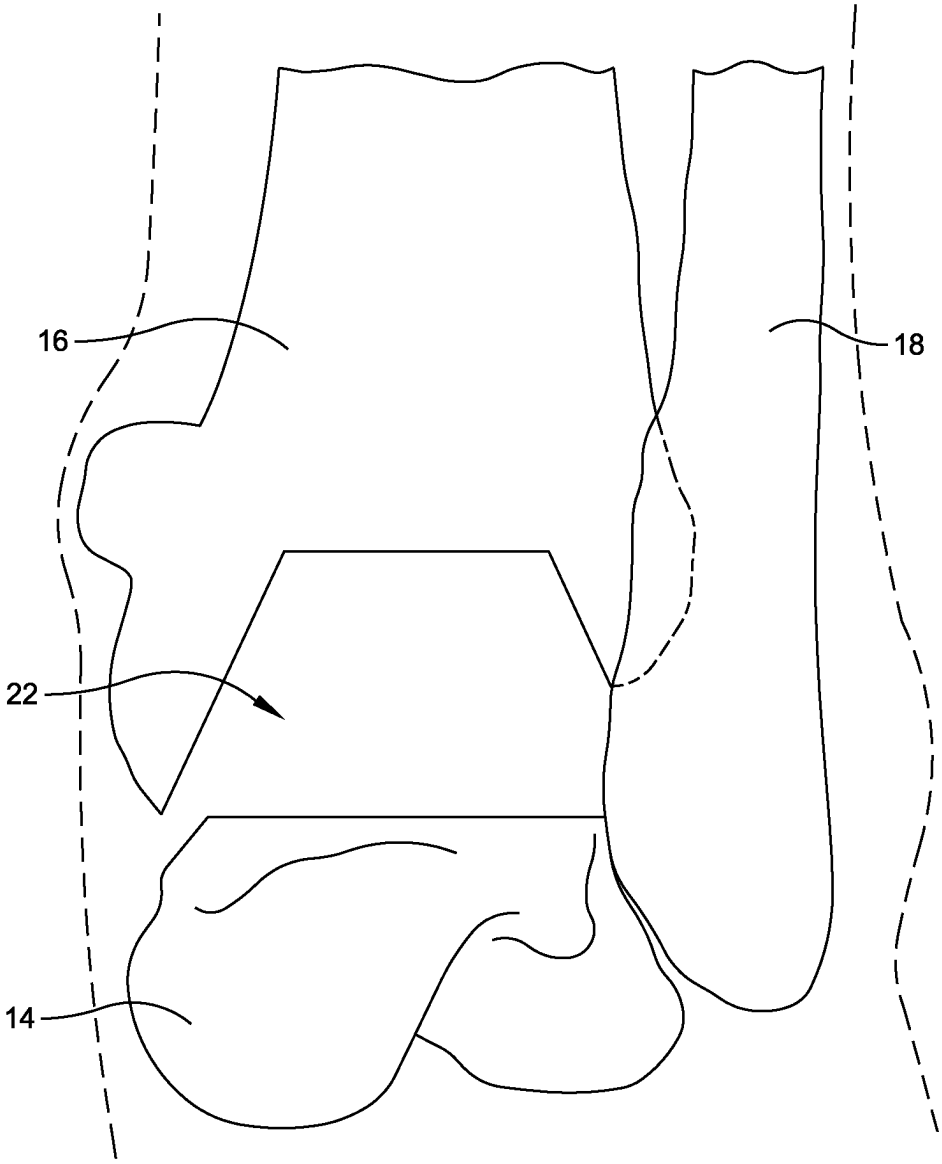

FIG. 15

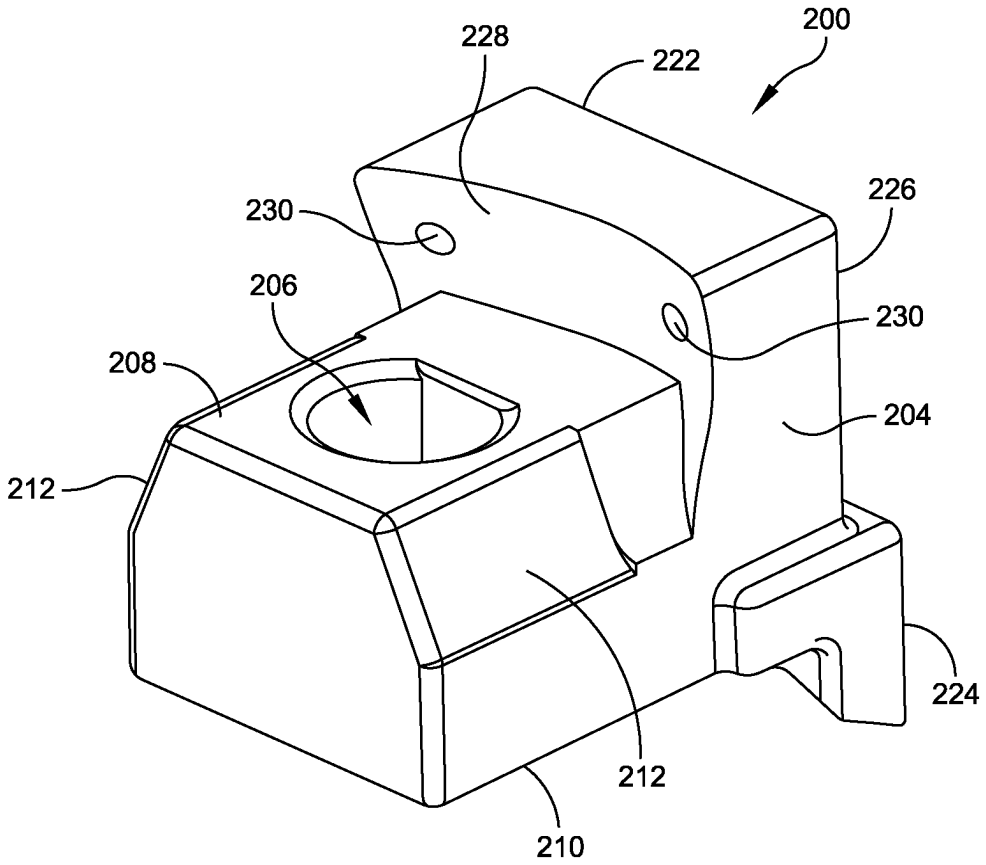

FIG. 16

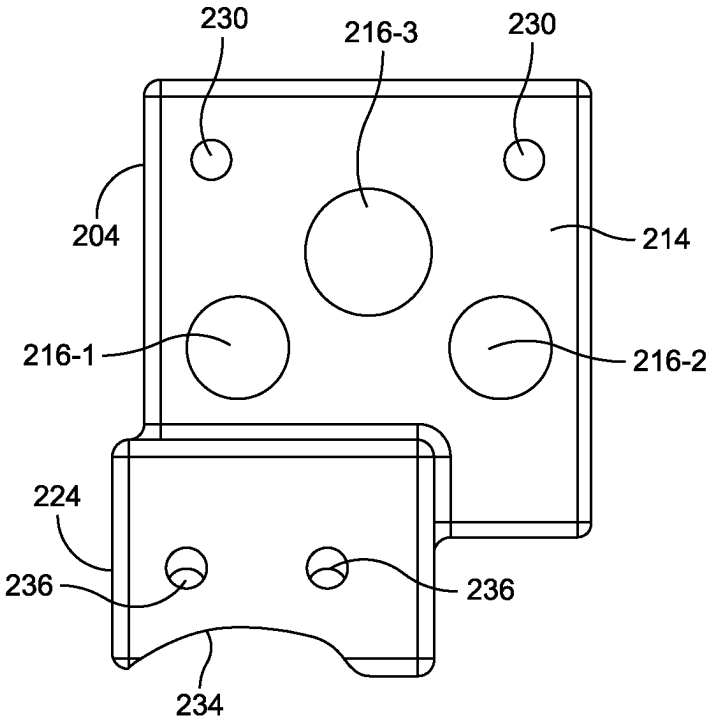
230
216-3
230
204
214
216-1
216-2
224
236
236
234

FIG. 17

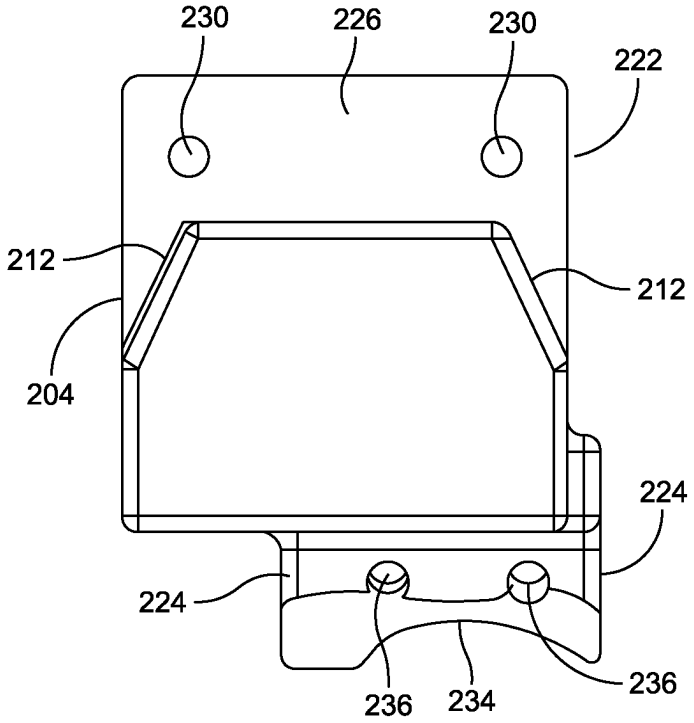
230
226
230
222
212
212
204
224
224
236
234
236

FIG. 18

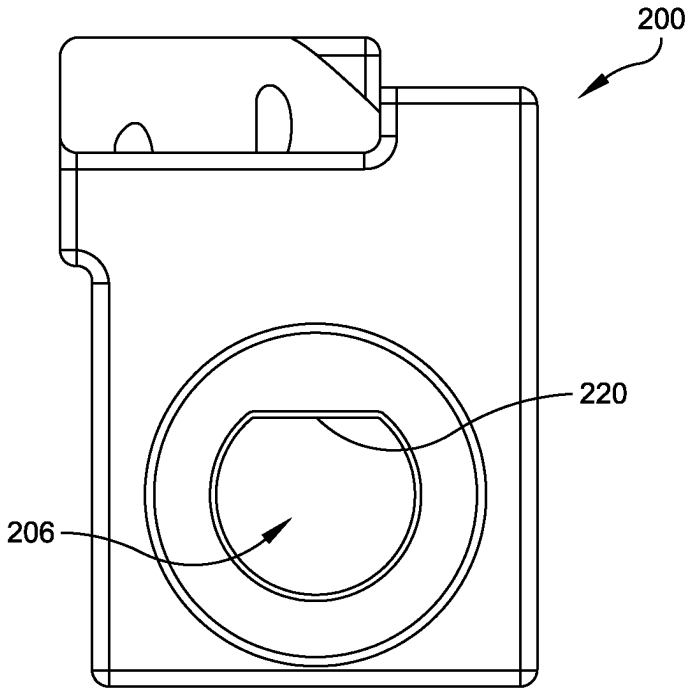

FIG. 19

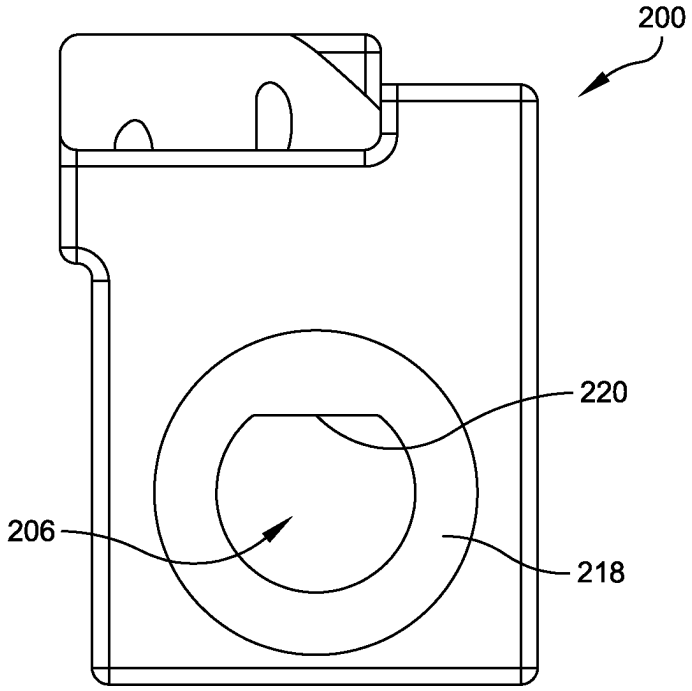

FIG. 20

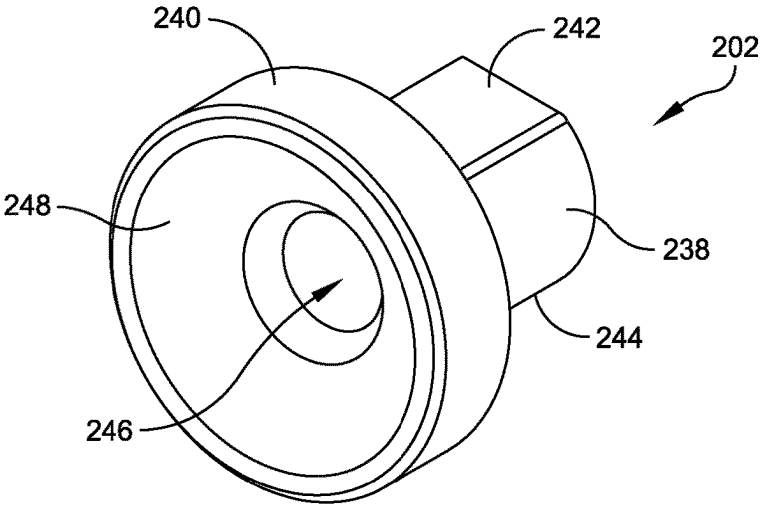

FIG. 21

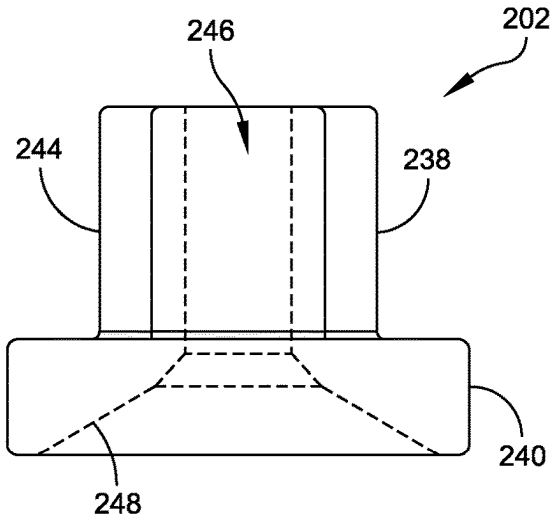

FIG. 22

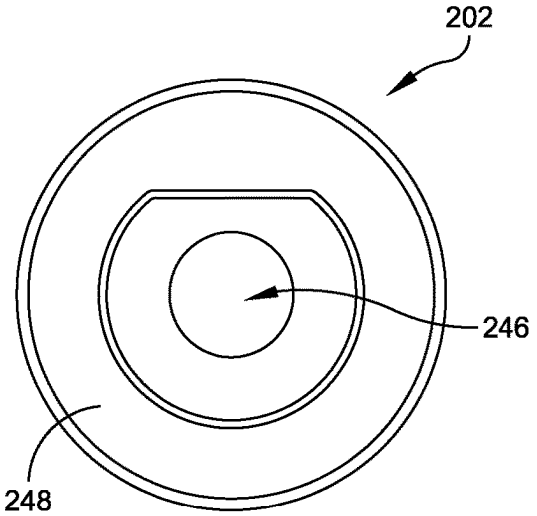

FIG. 23

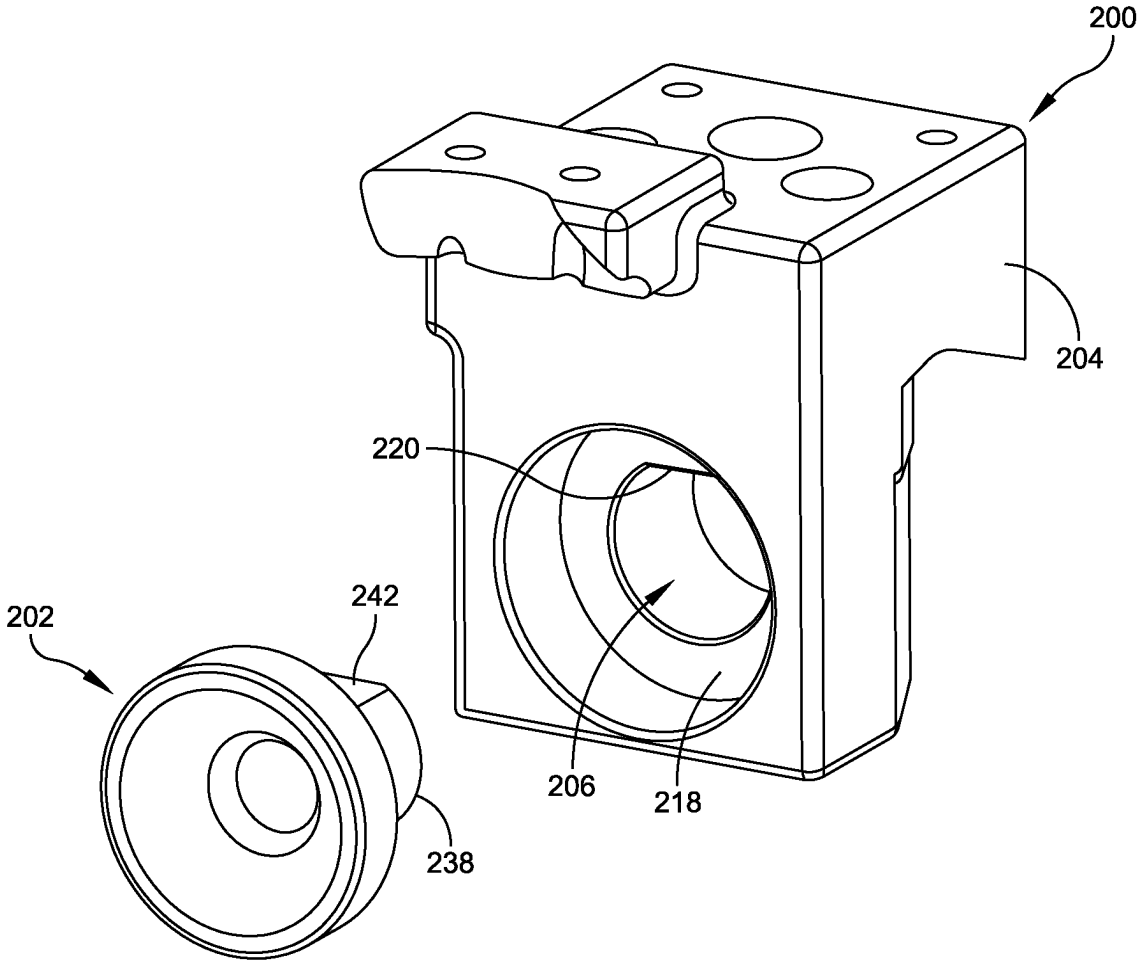

FIG. 24

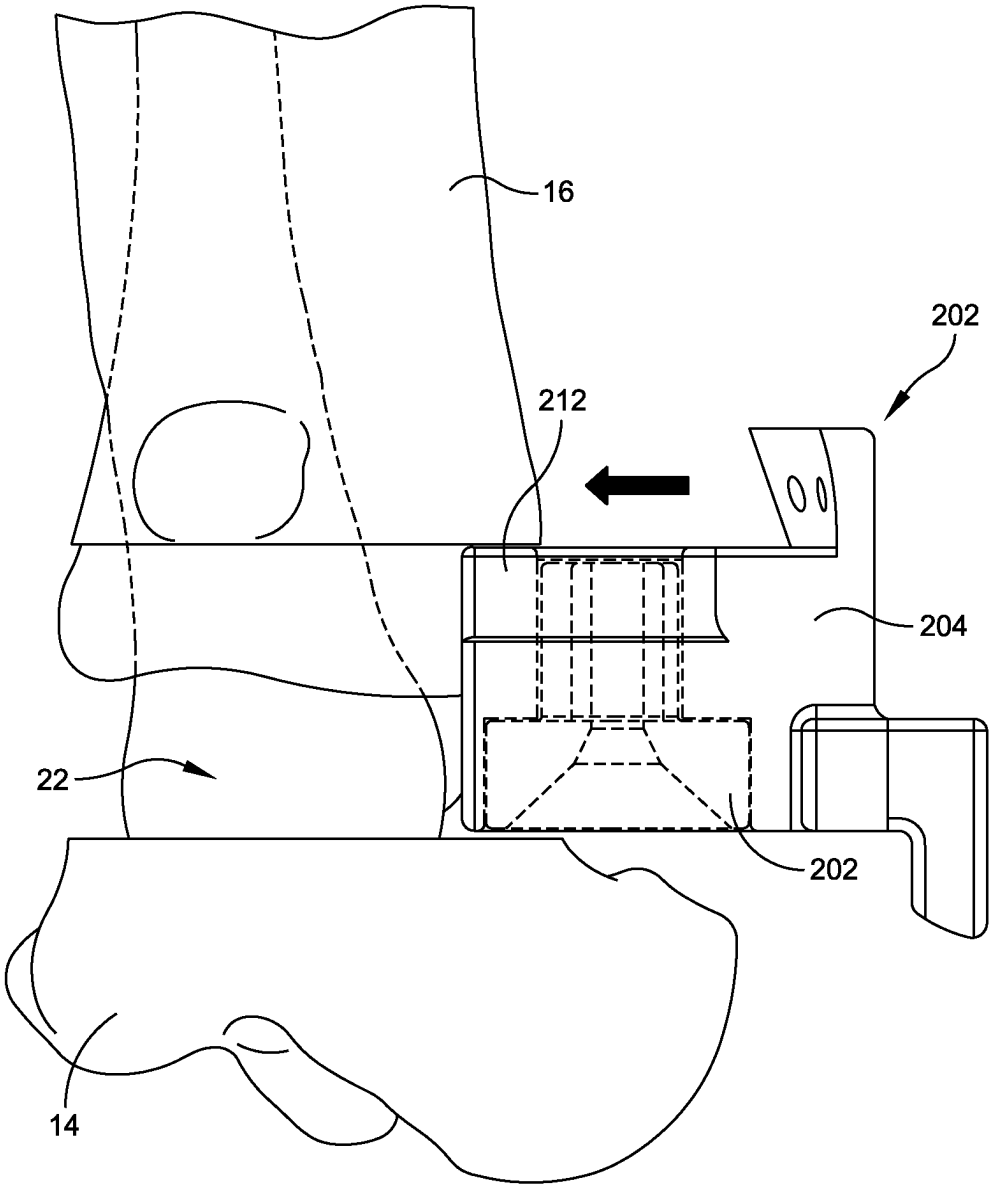

FIG. 25A

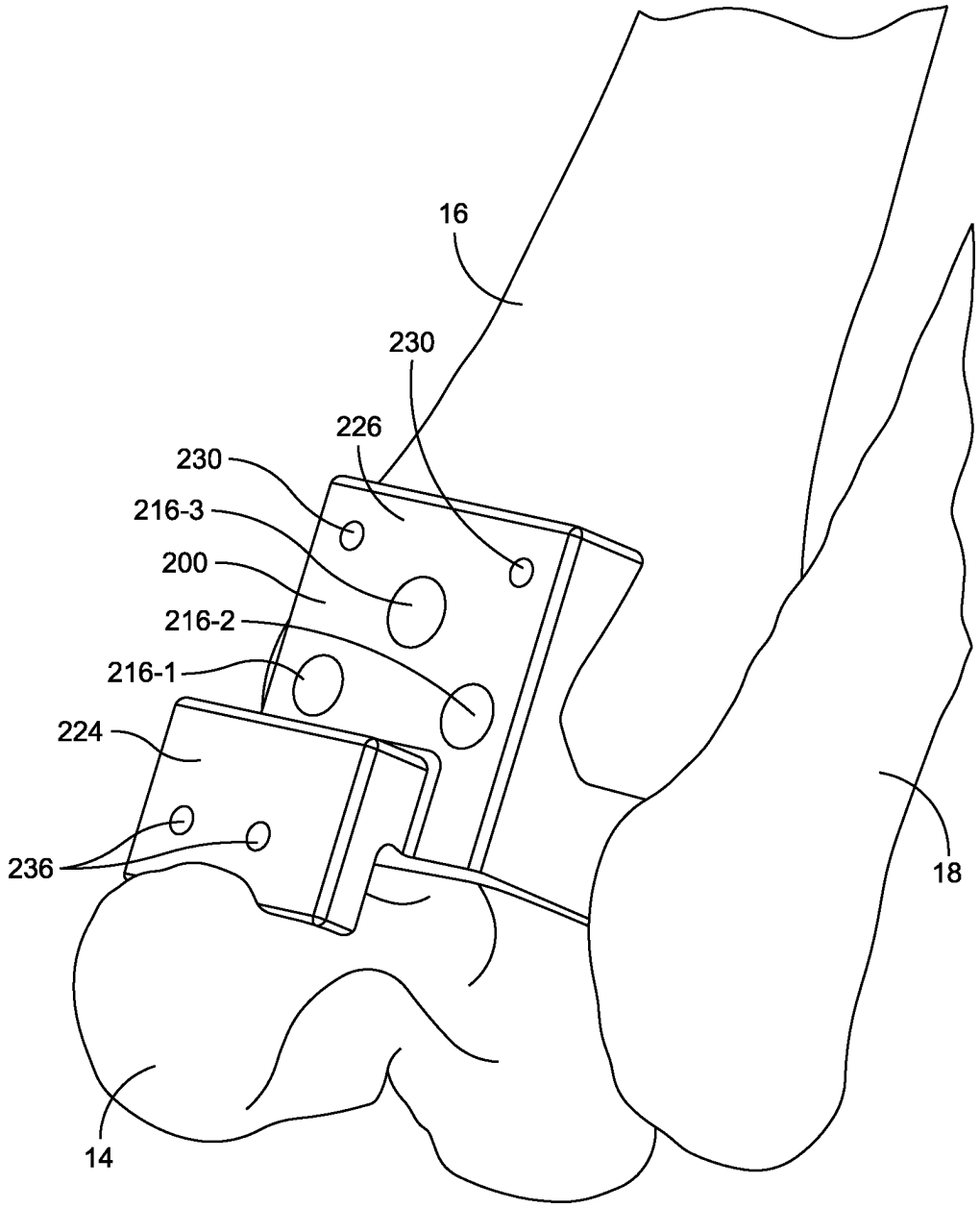

FIG. 25B

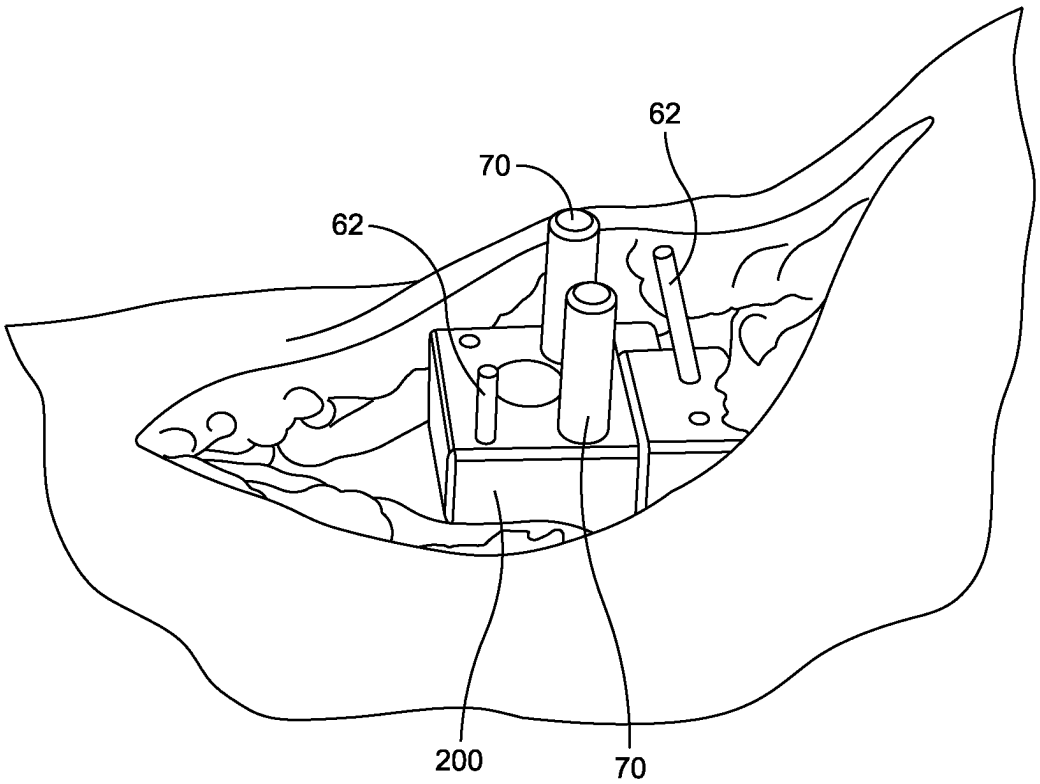

FIG. 25C

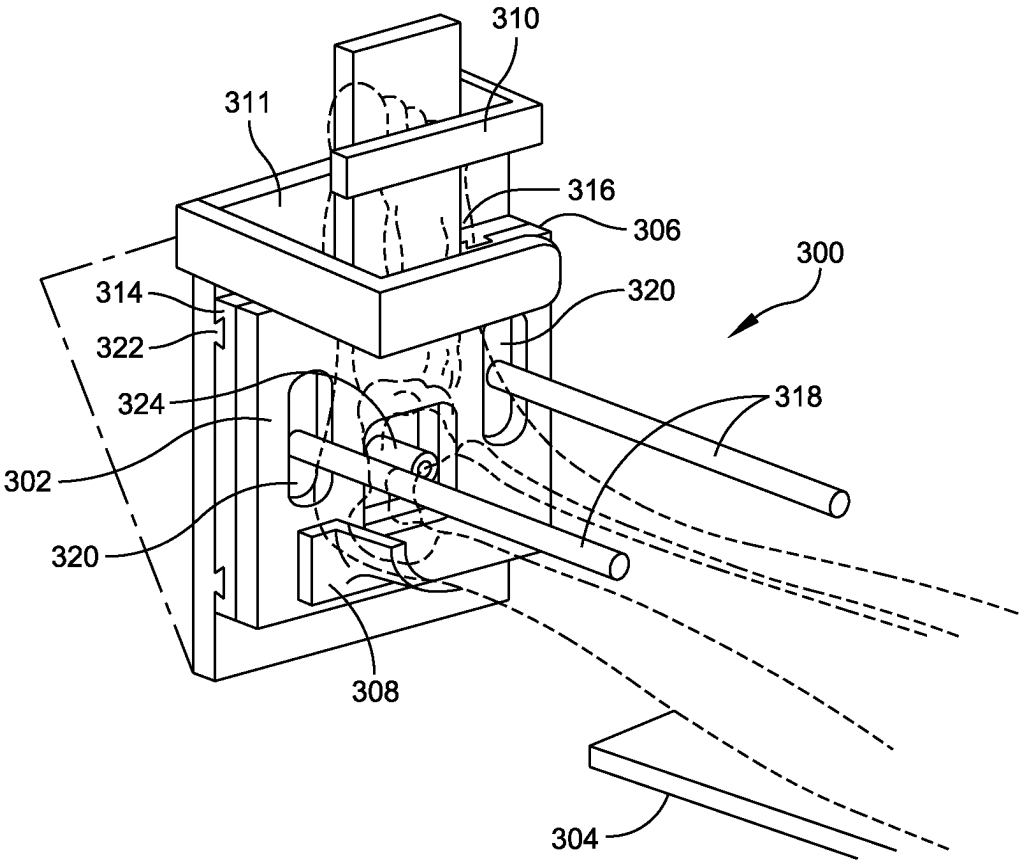

FIG. 26

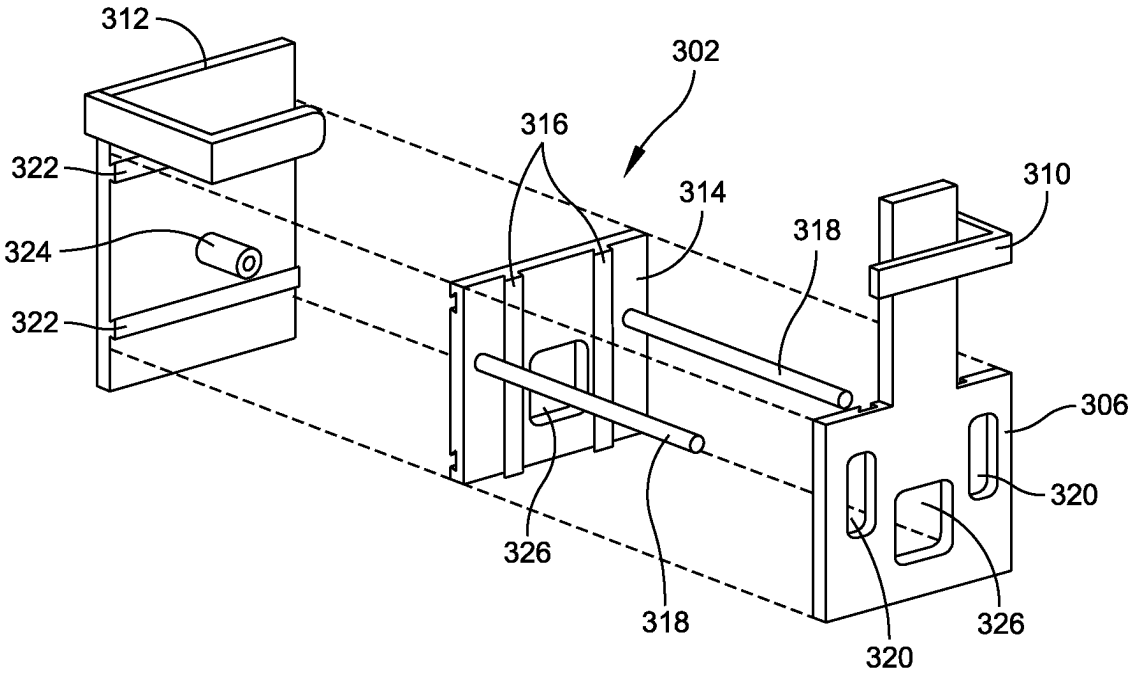

FIG. 27

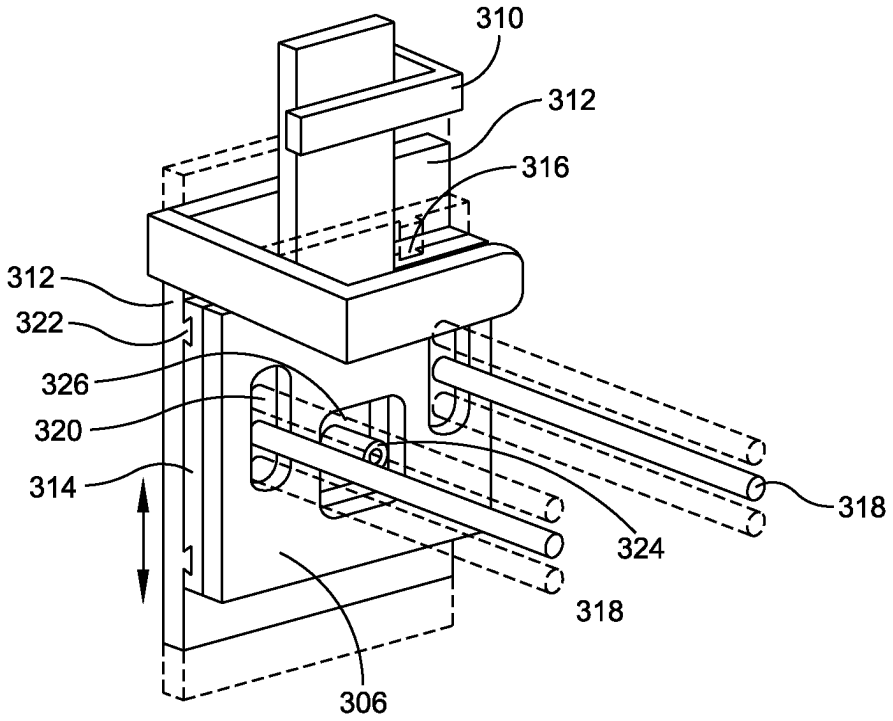

FIG. 28A

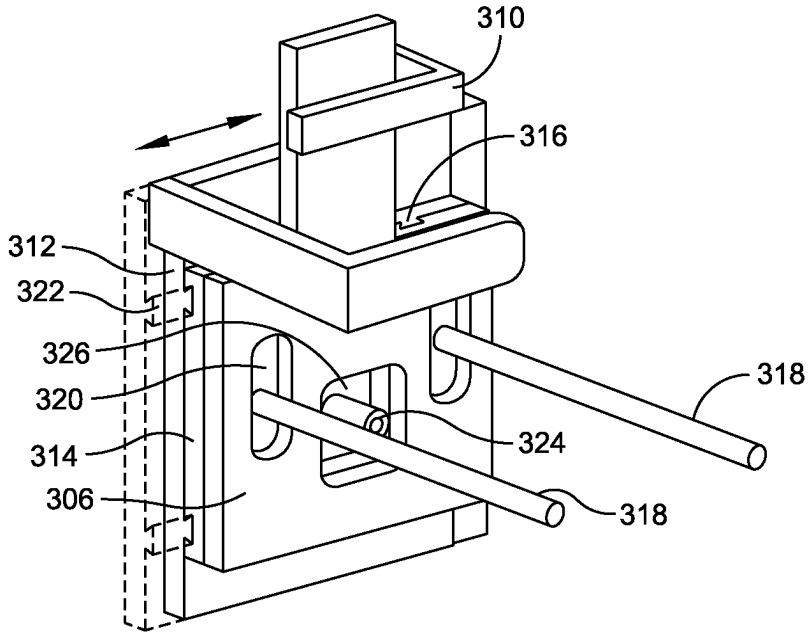

FIG. 28B

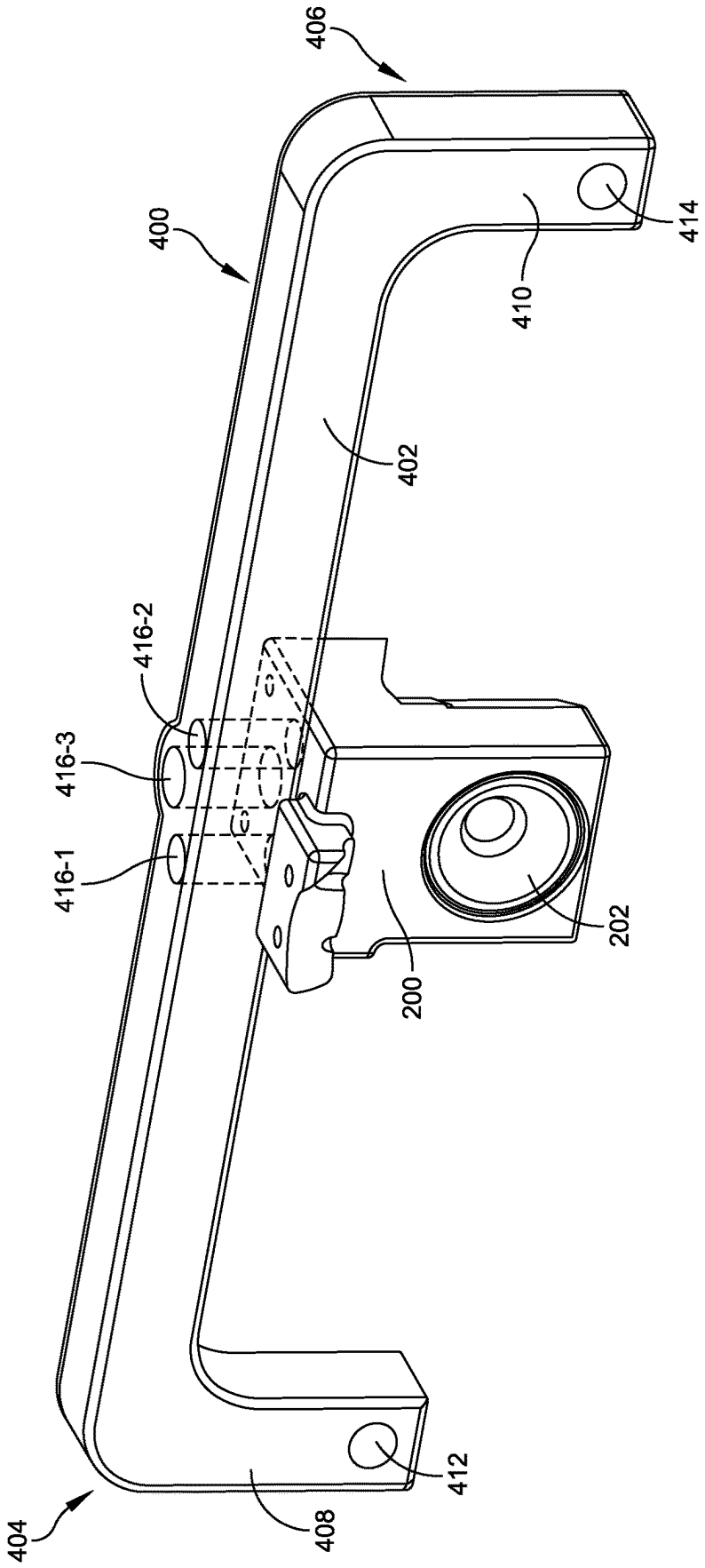

FIG. 29

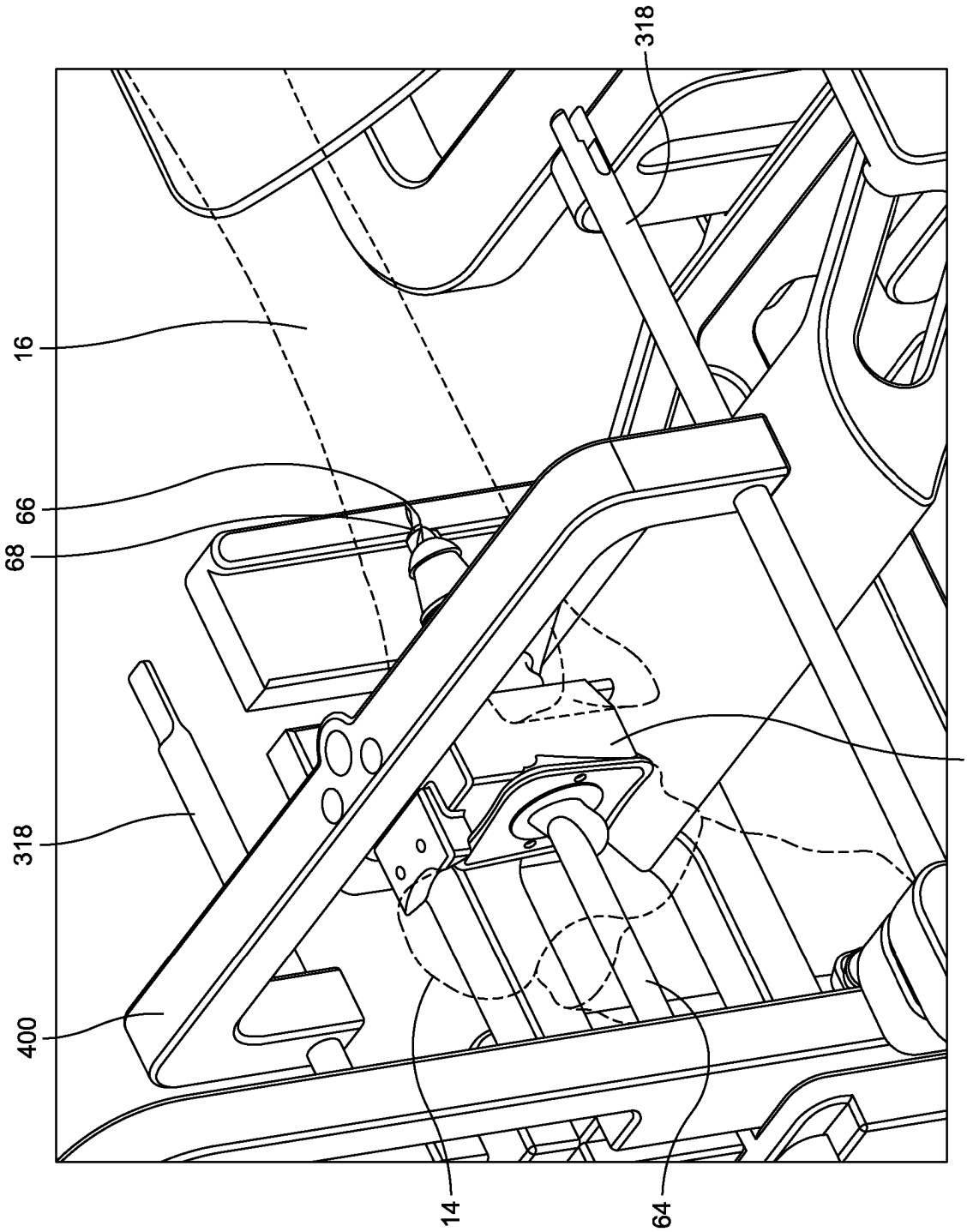

FIG. 30

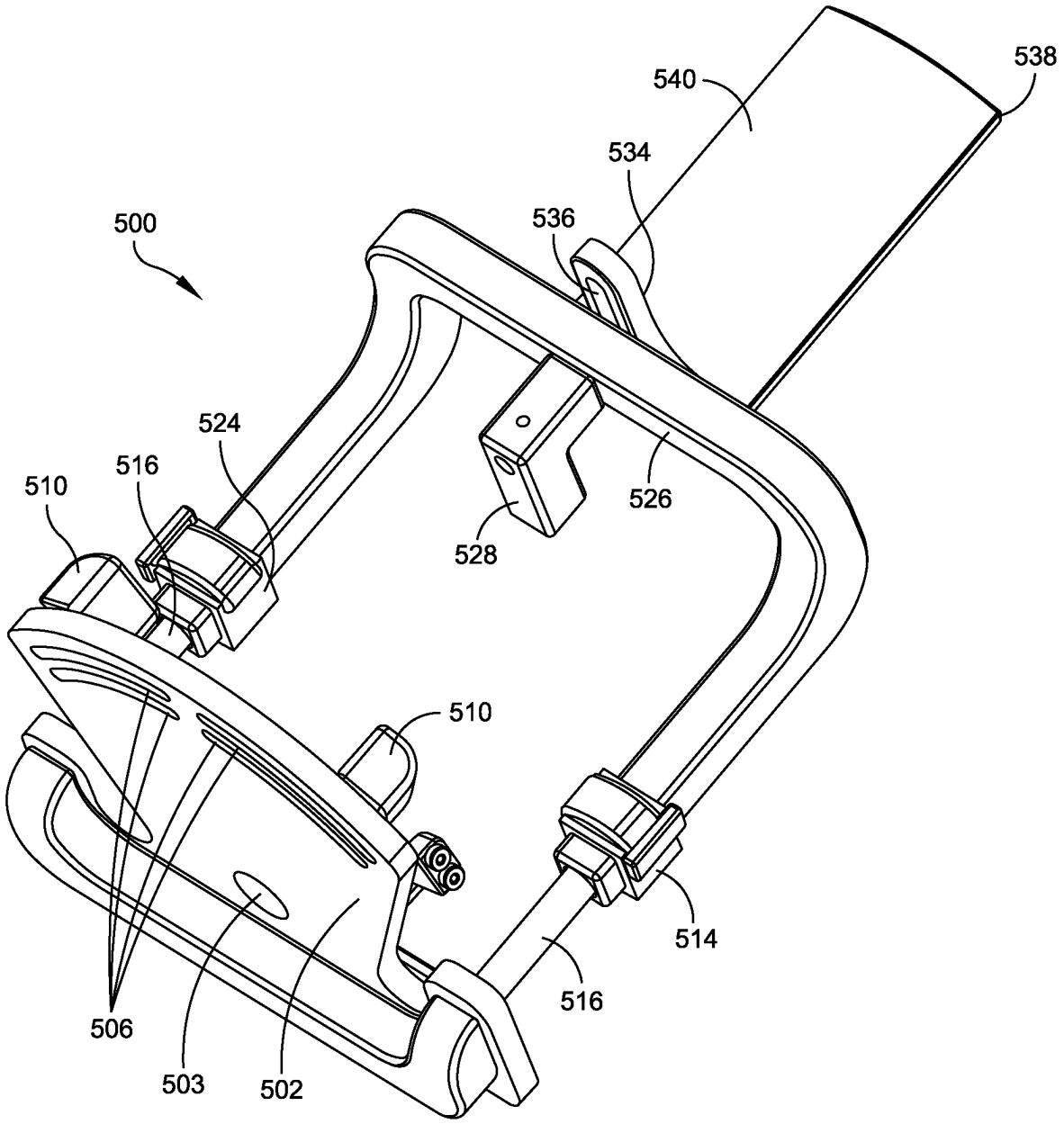

FIG. 31

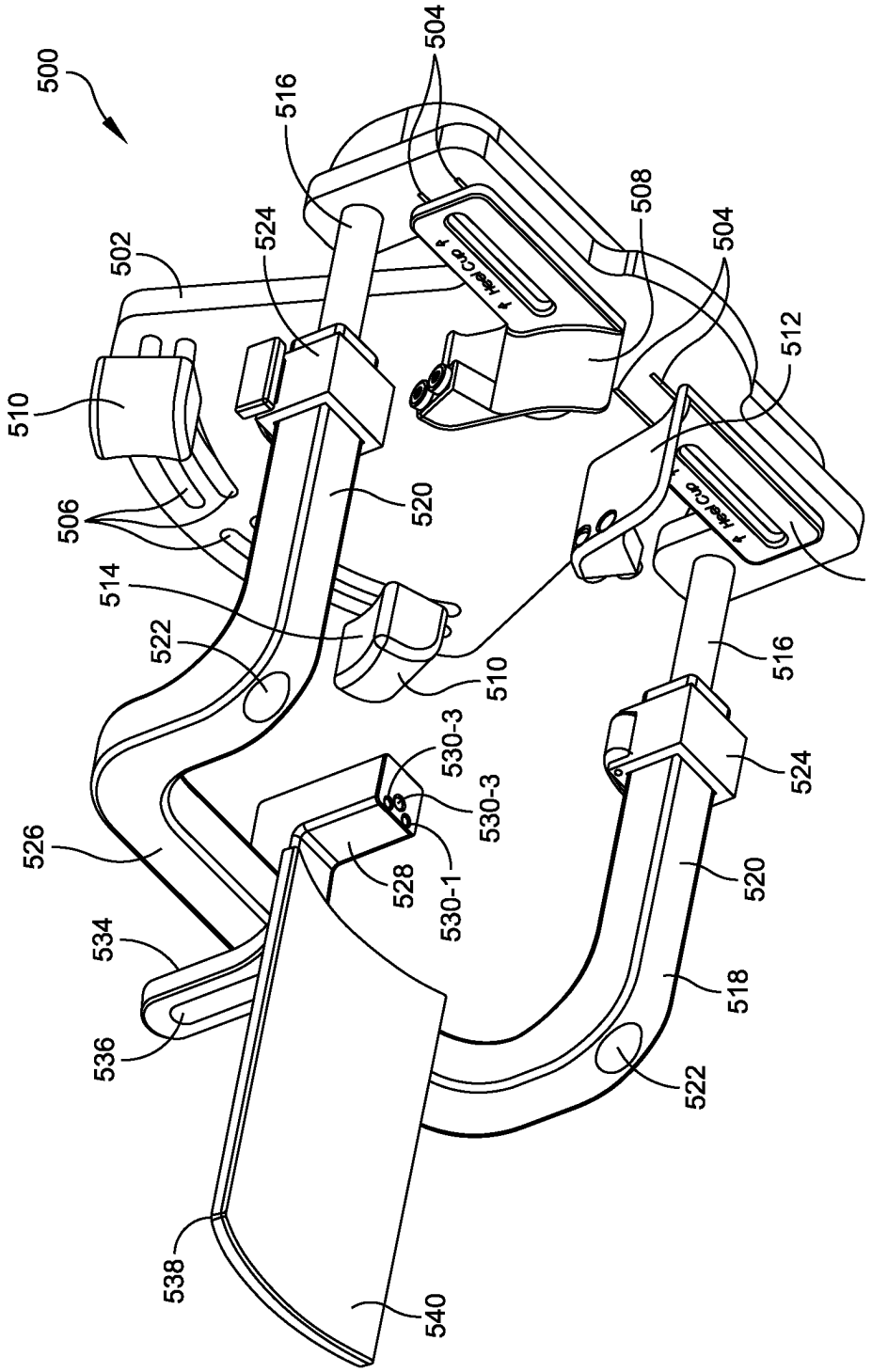
500
502
504
506
508
510
512
514
516
518
520
522
524
526
528
530-1
530-3
530-3
534
536
538
540
Heel Cup
Heel Cup

FIG. 32

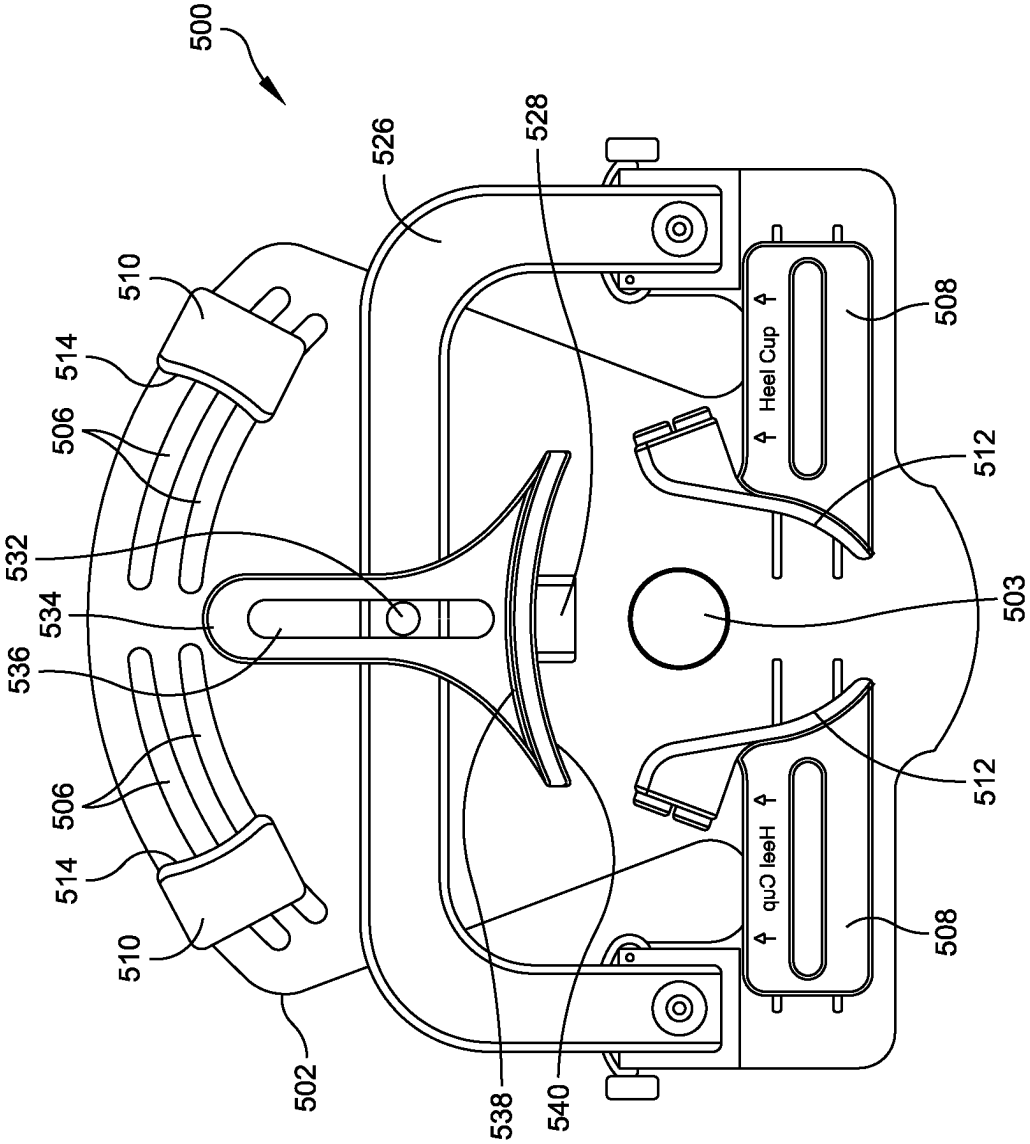
500
510
514
506
532
534
536
506
514
510
502
526
528
538
540
Heel Cup
Heel Crib
508
512
503
512
508

FIG. 33

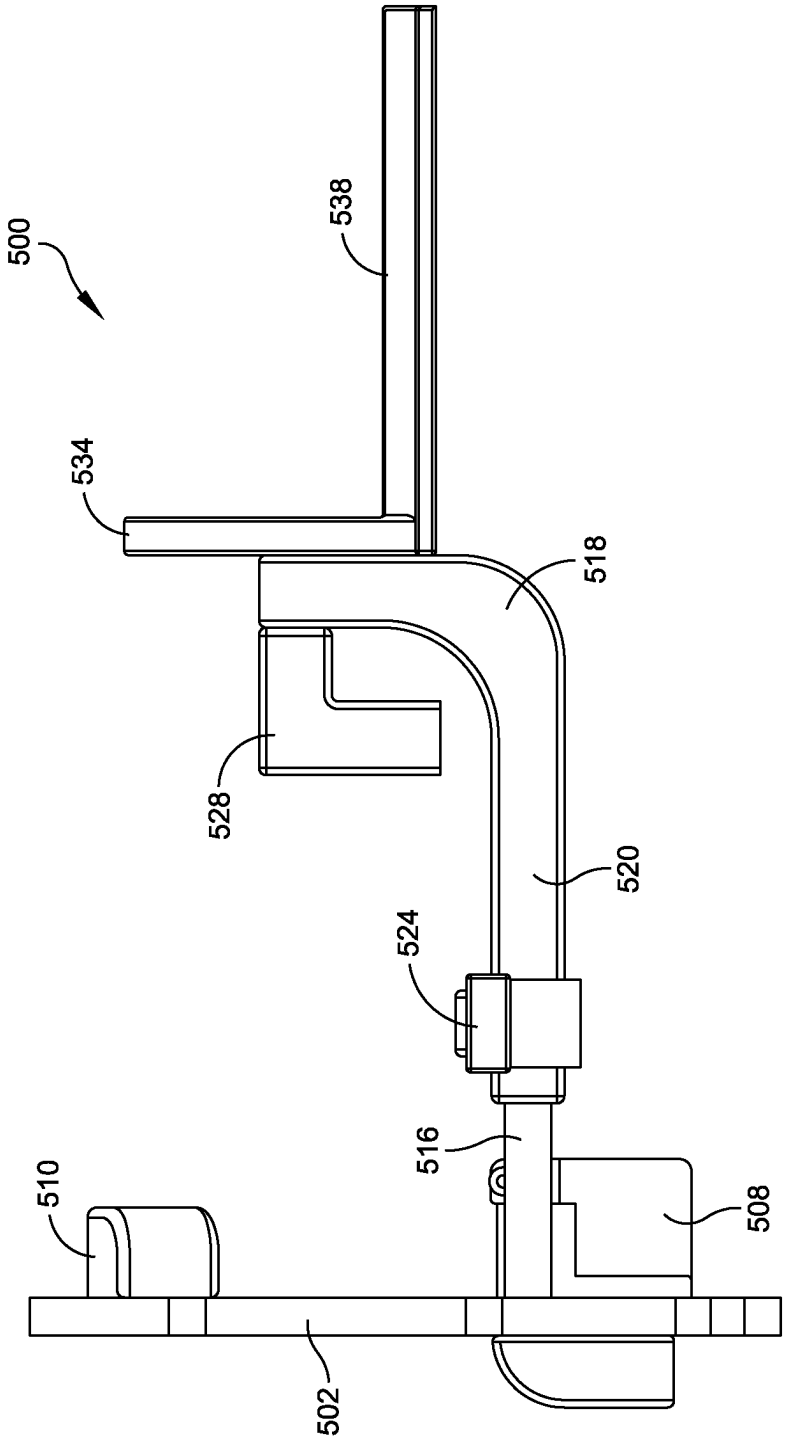

FIG. 34

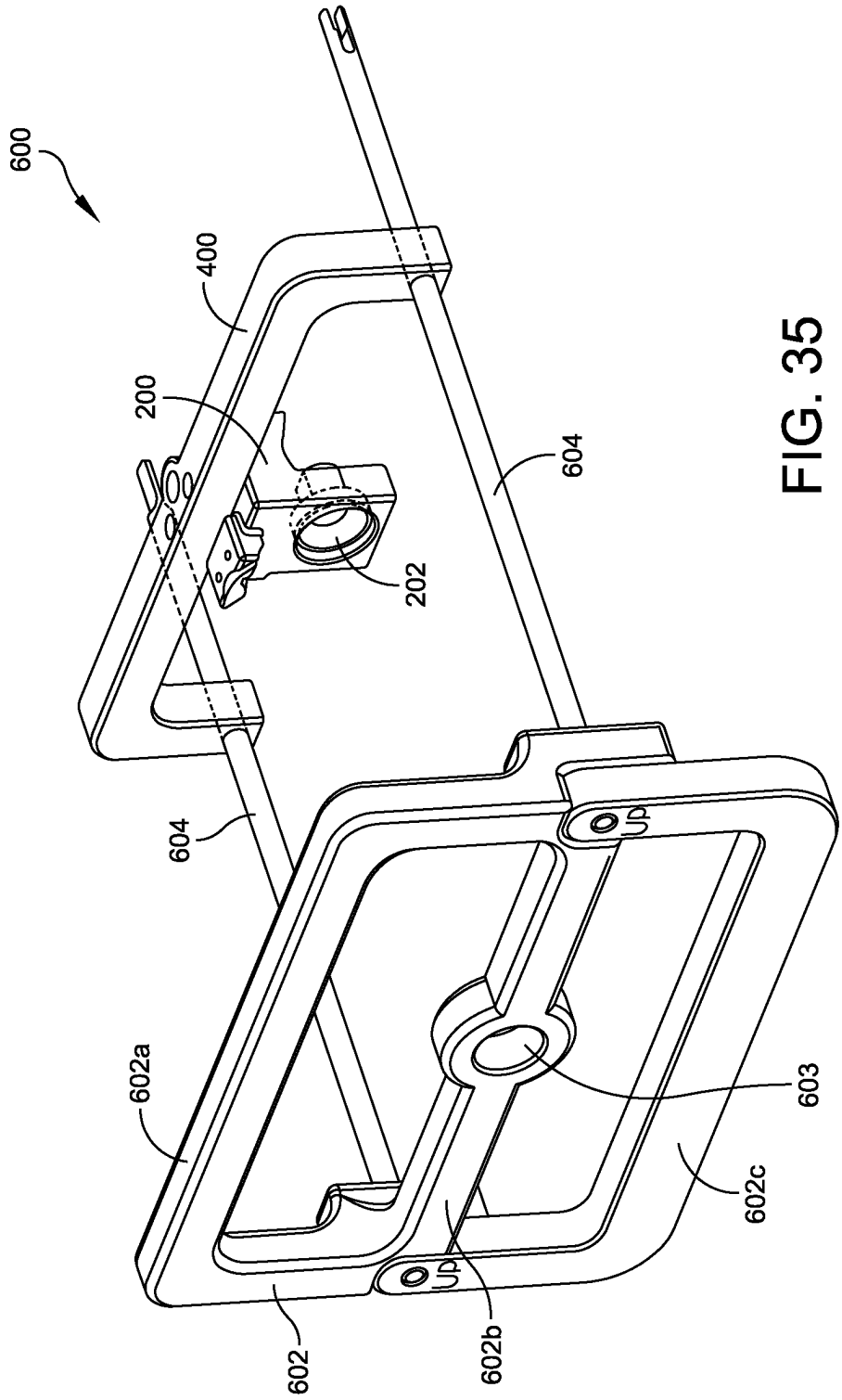

FIG. 35

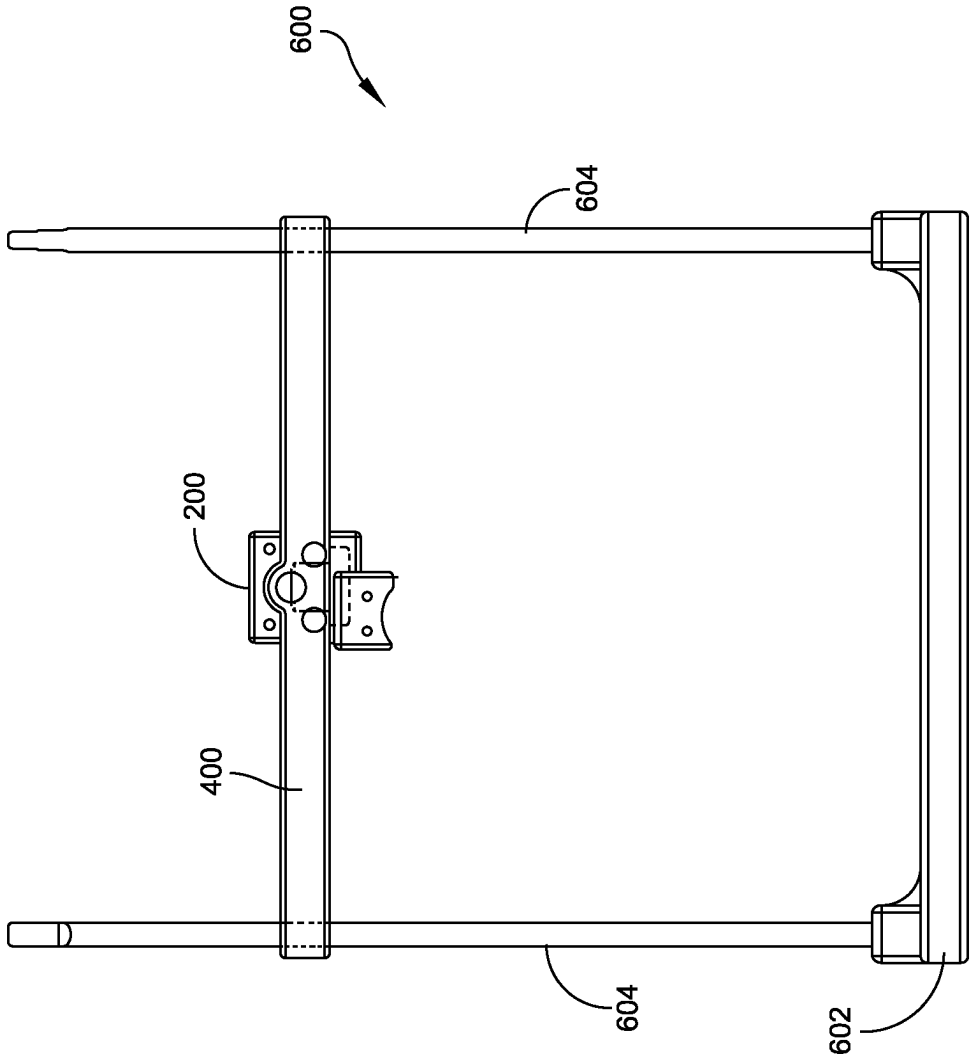

FIG. 36

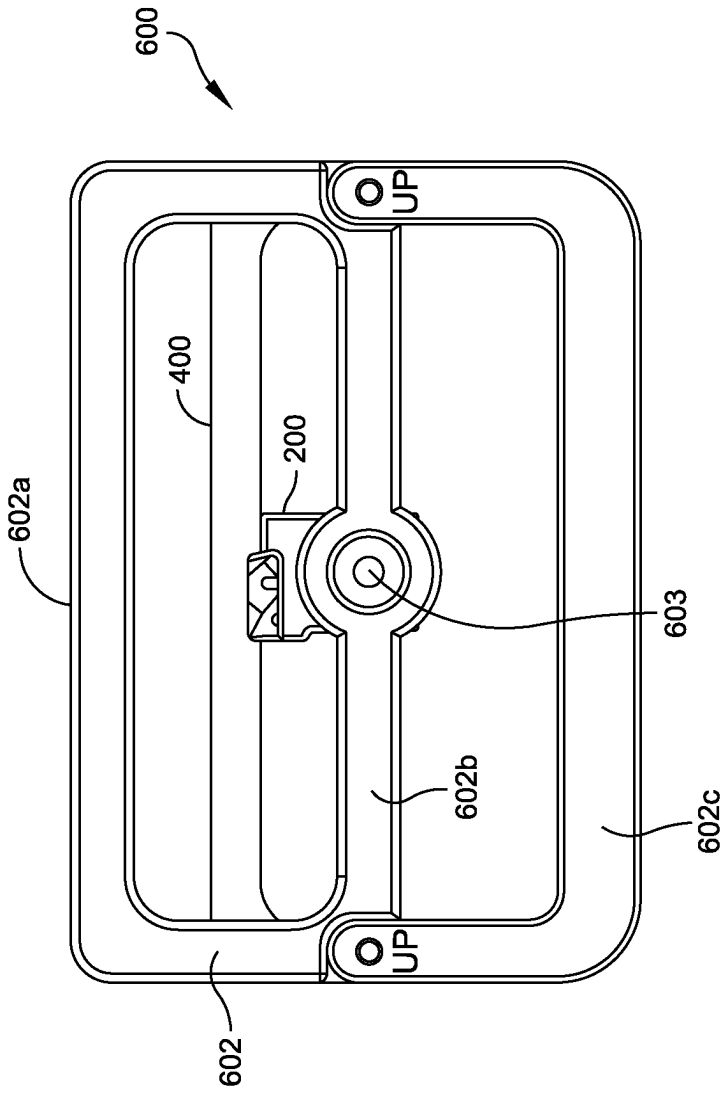

FIG. 37

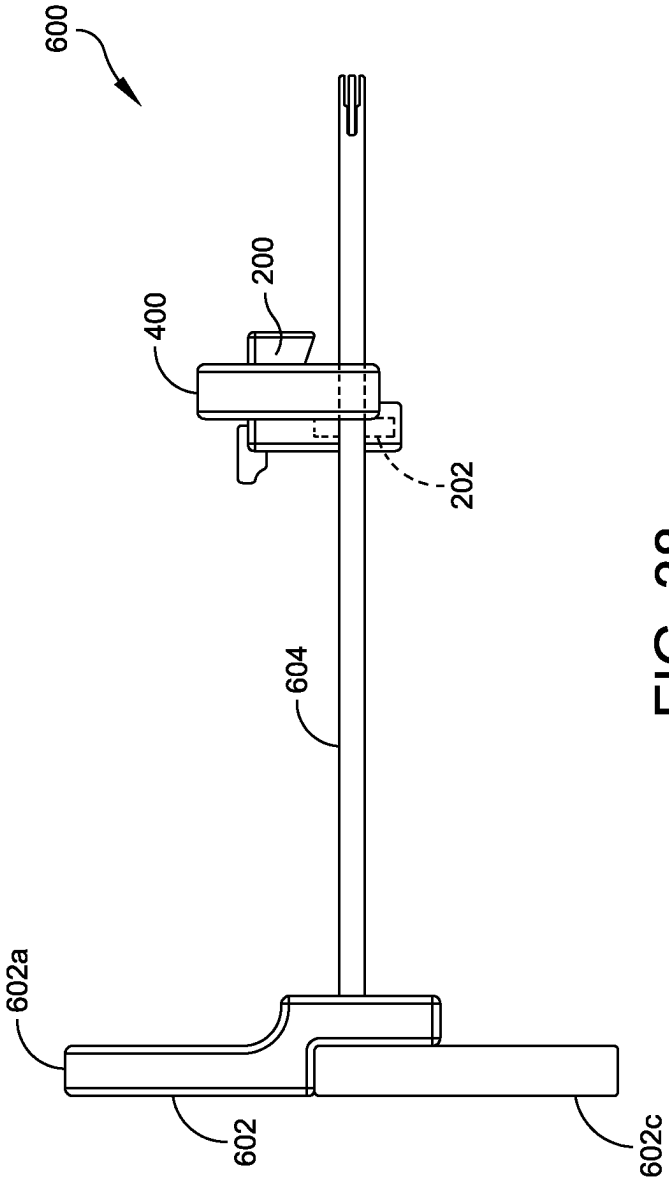

FIG. 38

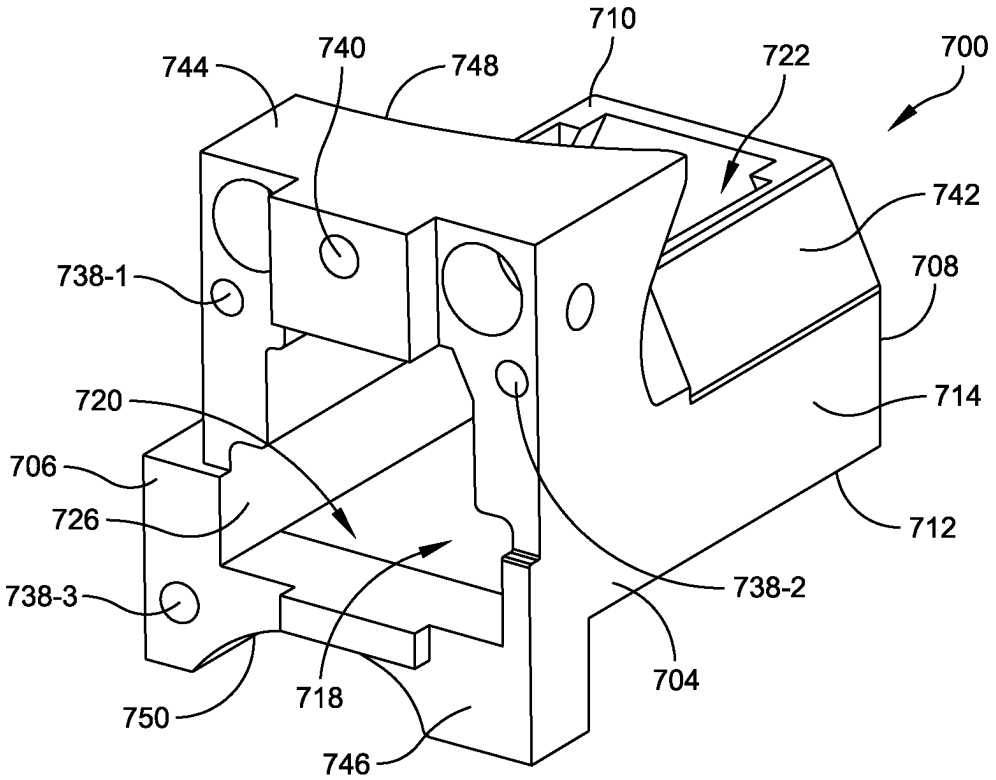
710
744
740
748
722
700
742
738-1
708
720
714
706
726
712
738-3
738-2
704
750
718
746

FIG. 39

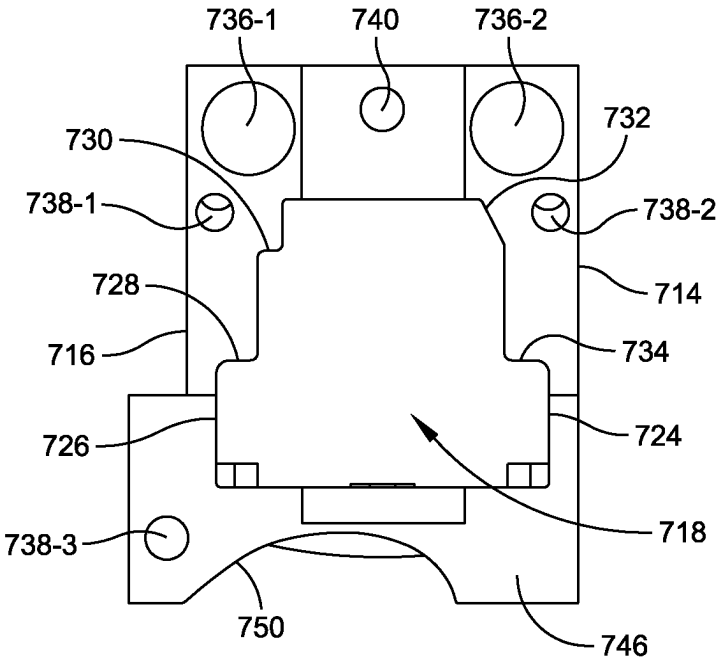
736-1
740
736-2
730
732
738-1
738-2
728
714
716
734
726
724
738-3
718
750
746

FIG. 40

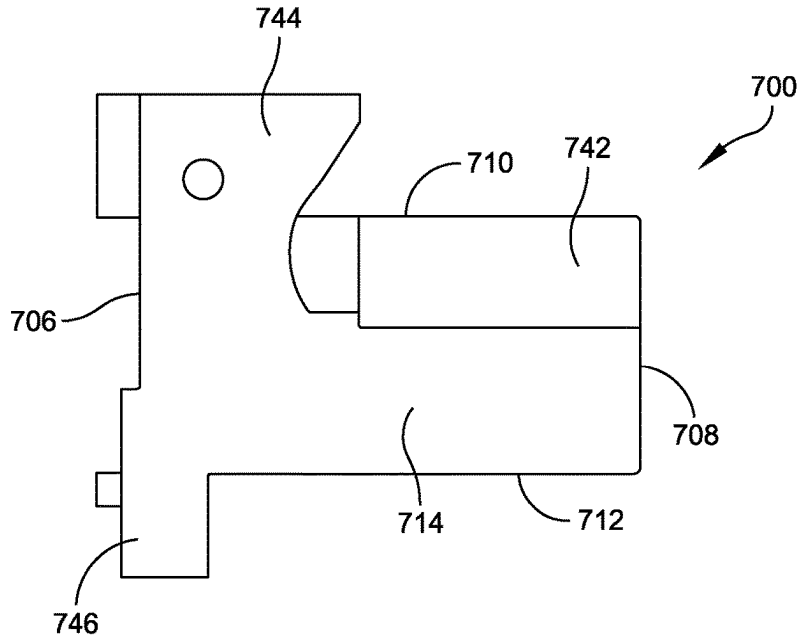

FIG. 41

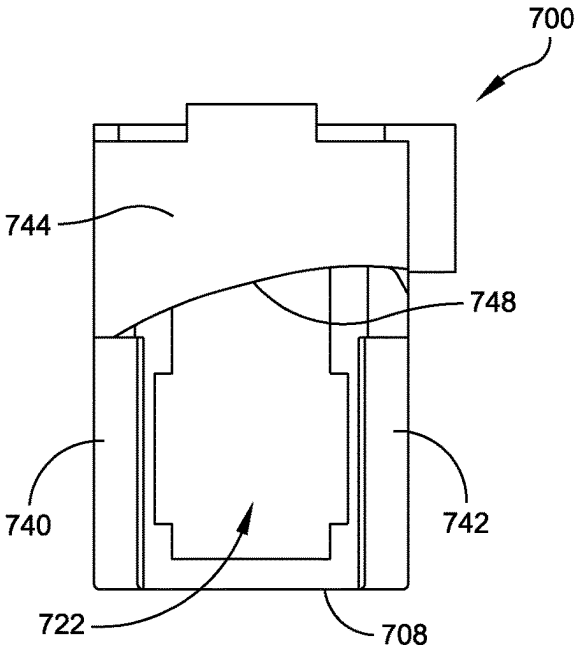

FIG. 42

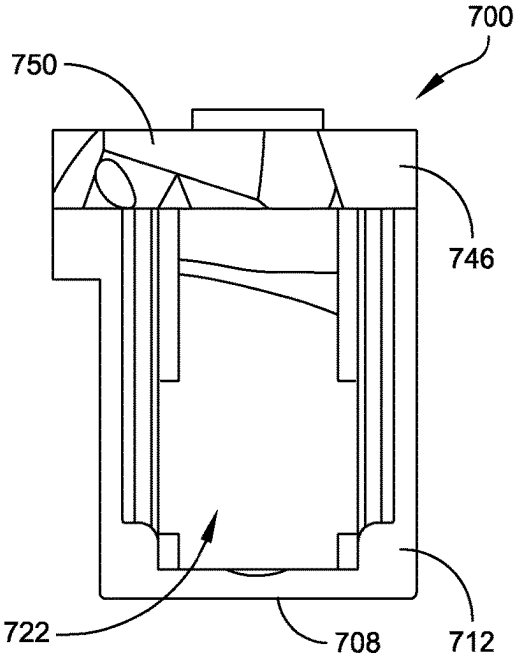

FIG. 43

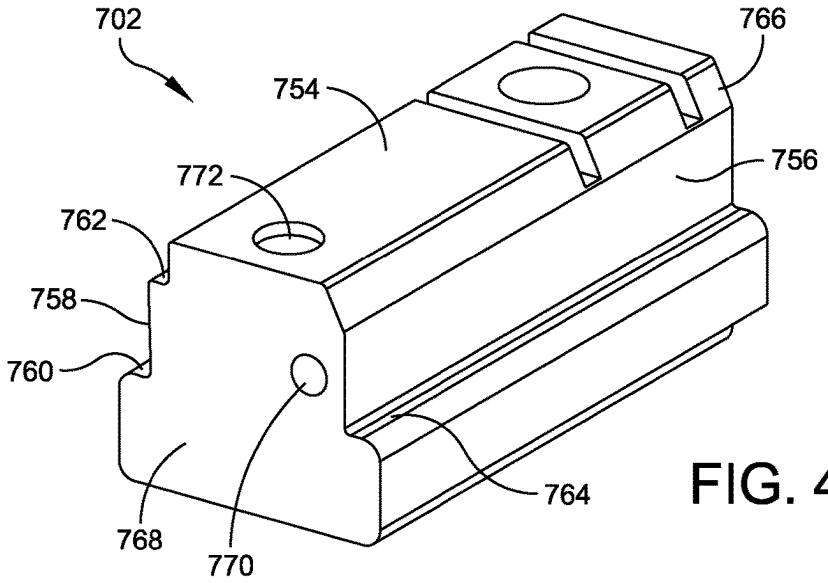

FIG. 44

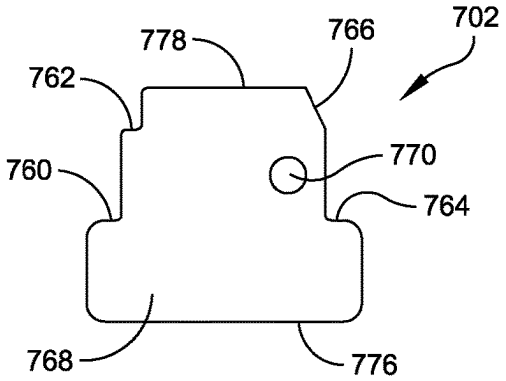

FIG. 45

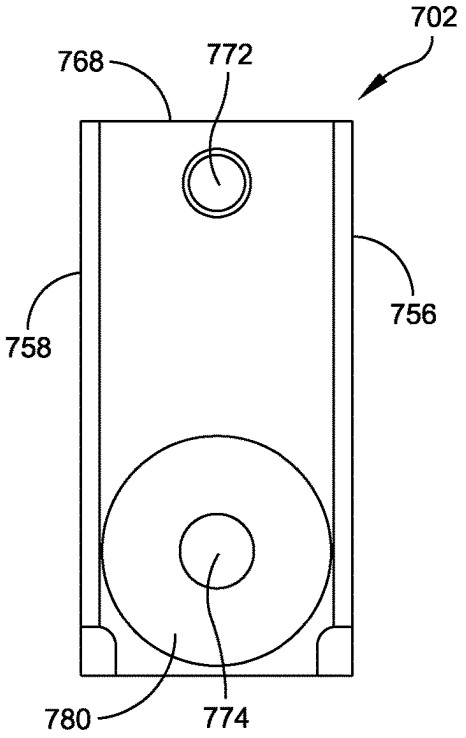

FIG. 46

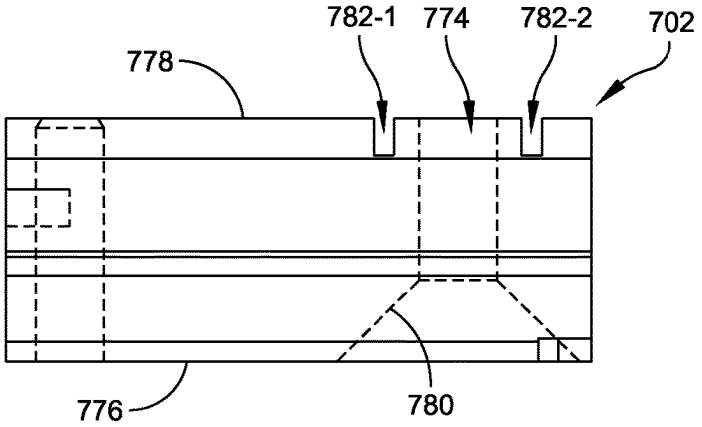

FIG. 47

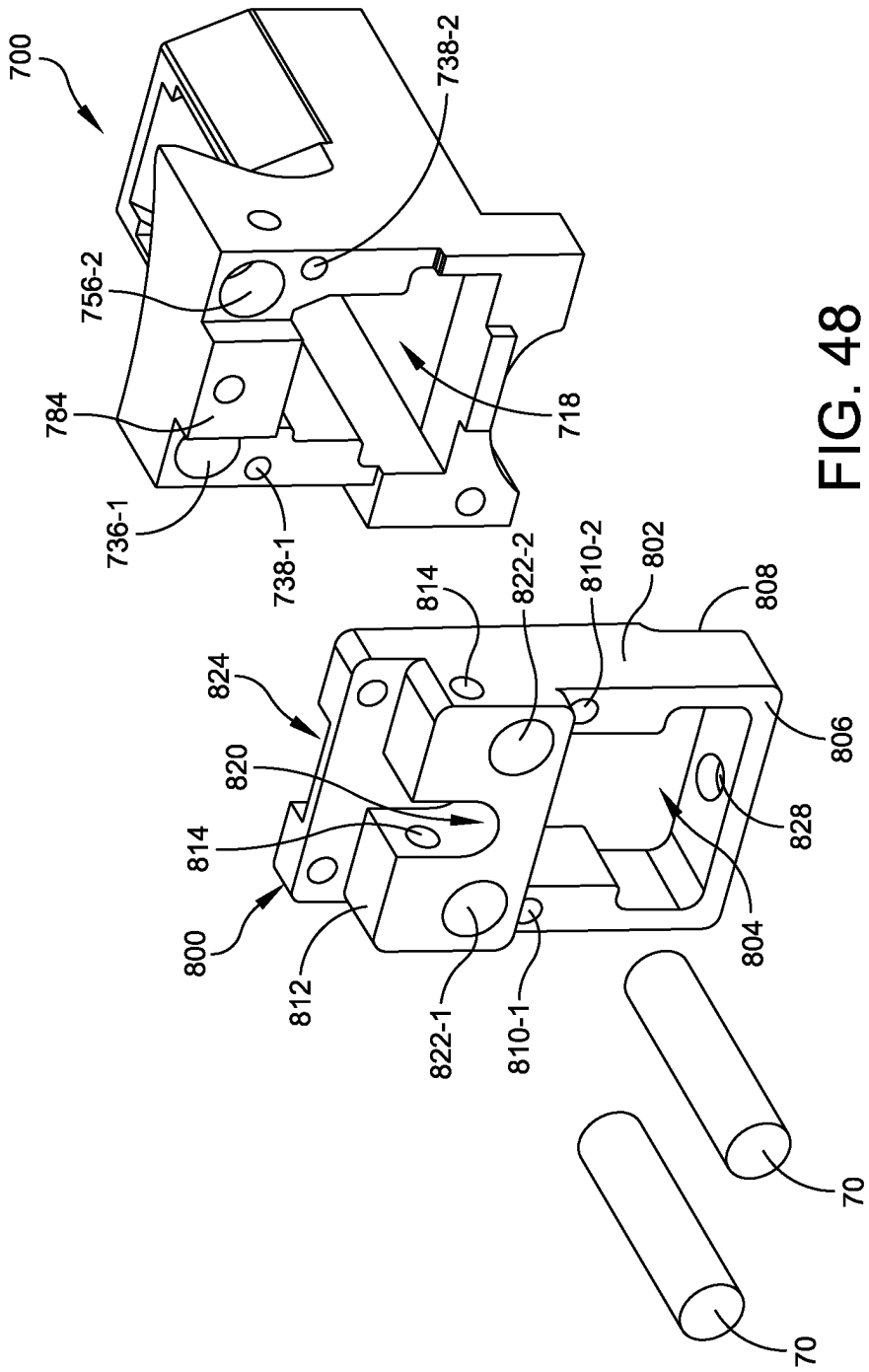
700
738-2
756-2
784
718
736-1
738-1
814
822-2
810-2
802
808
824
820
806
814
828
800
804
812
822-1
810-1
70
70

FIG. 48

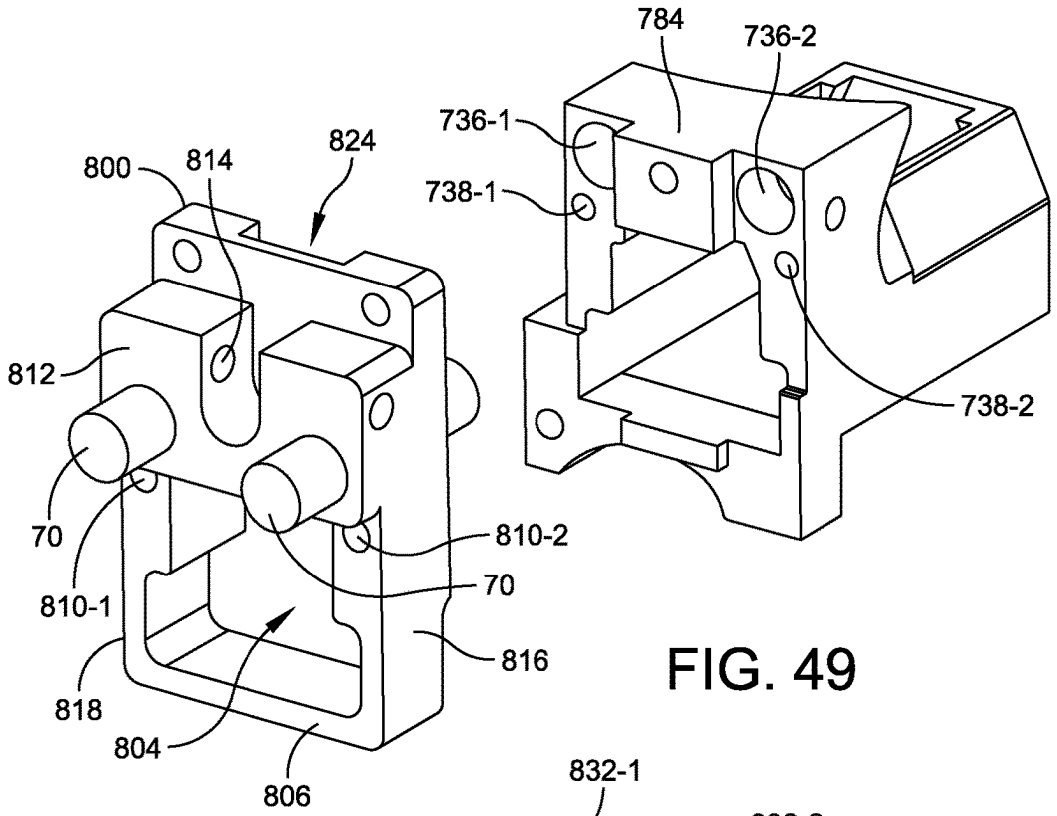
784
736-2
736-1
738-1
738-2
800
814
824
812
70
810-1
810-2
70
816
818
804
806

FIG. 49

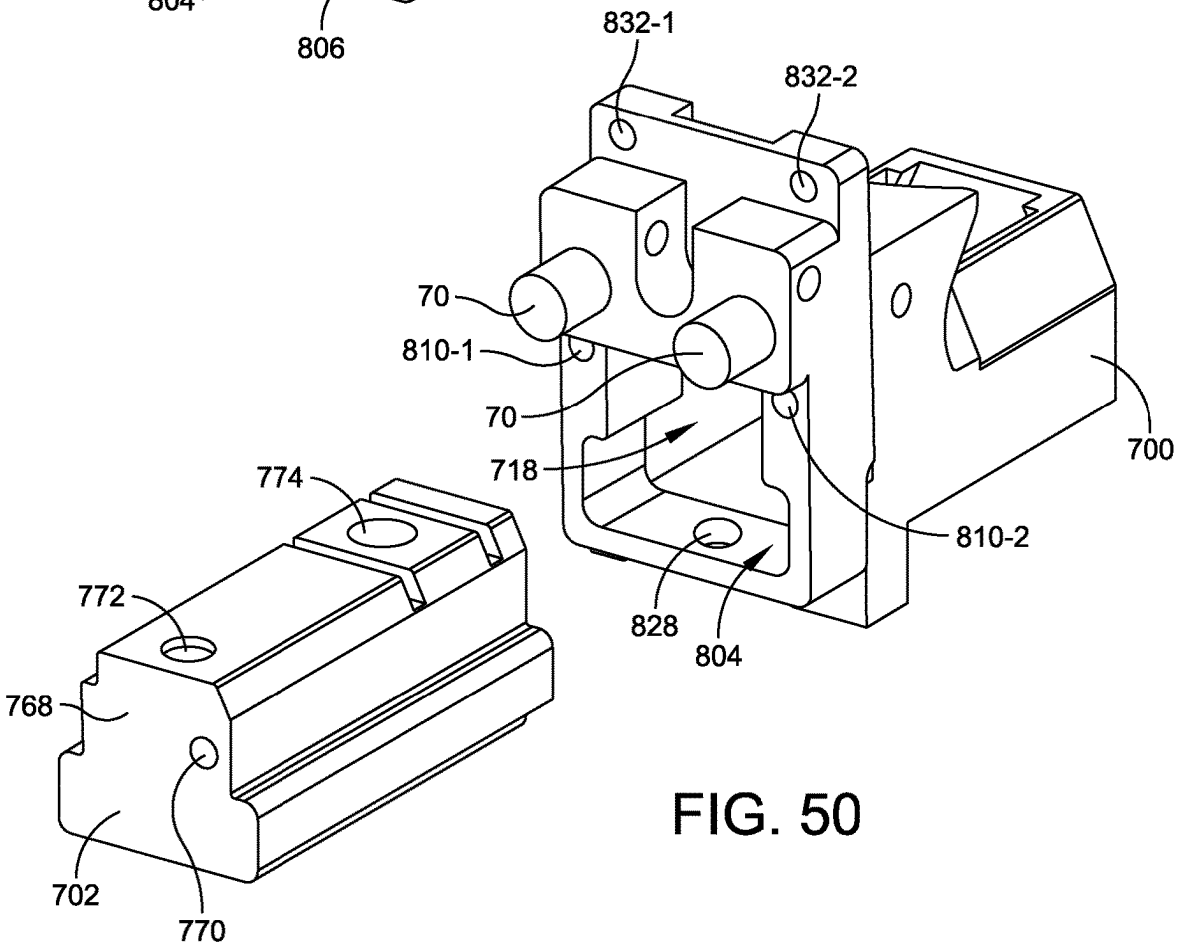
832-1
832-2
70
810-1
70
718
700
810-2
828
804
774
772
768
702
770

FIG. 50

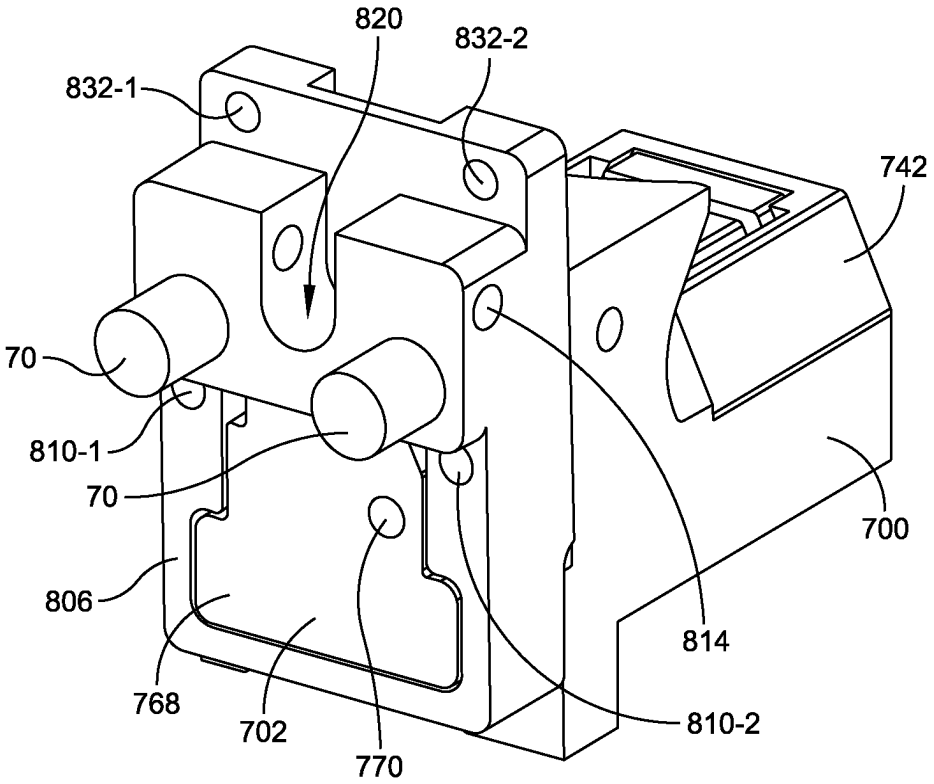

FIG. 51

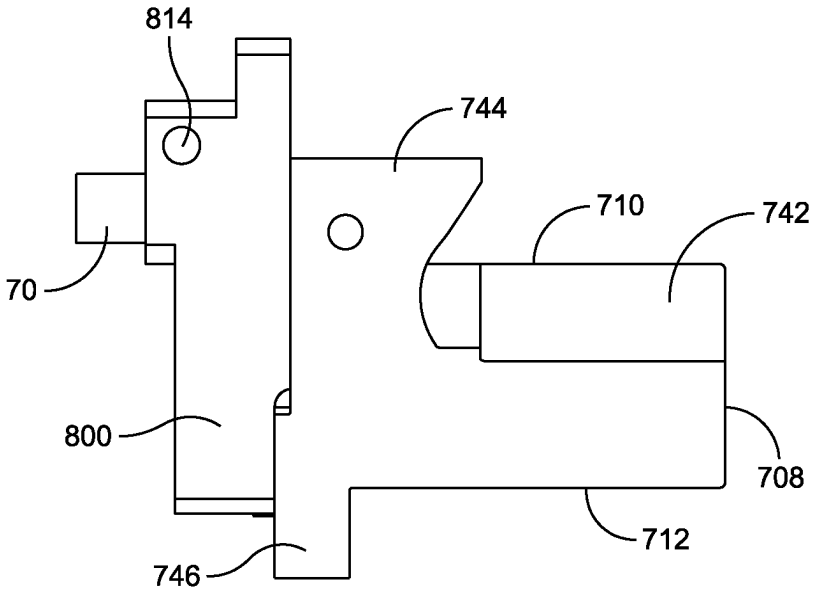

FIG. 52

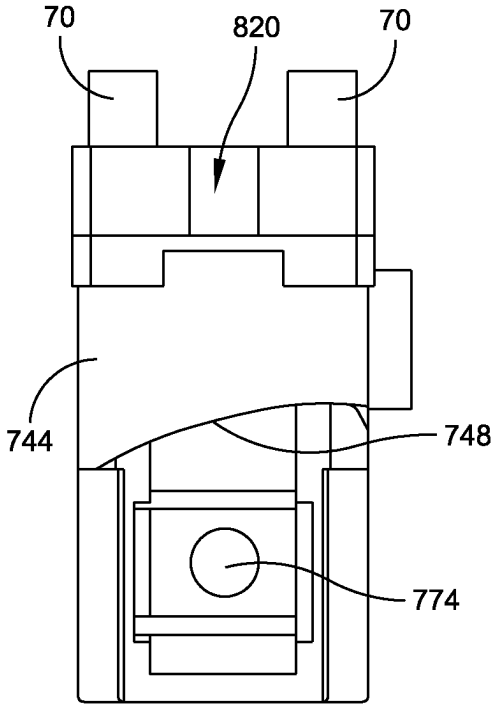

FIG. 53

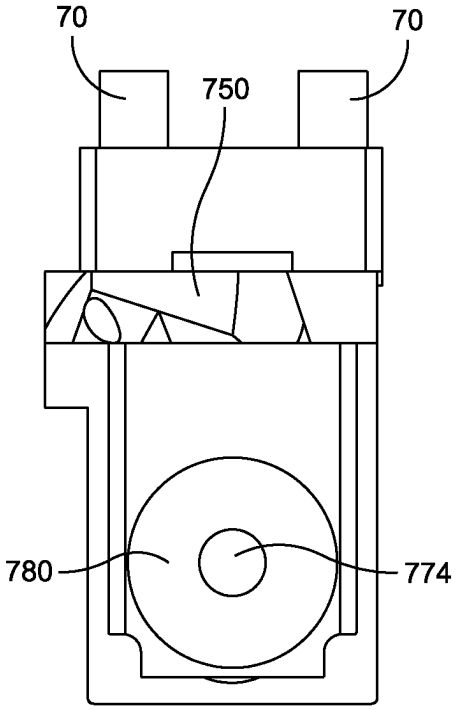

FIG. 54

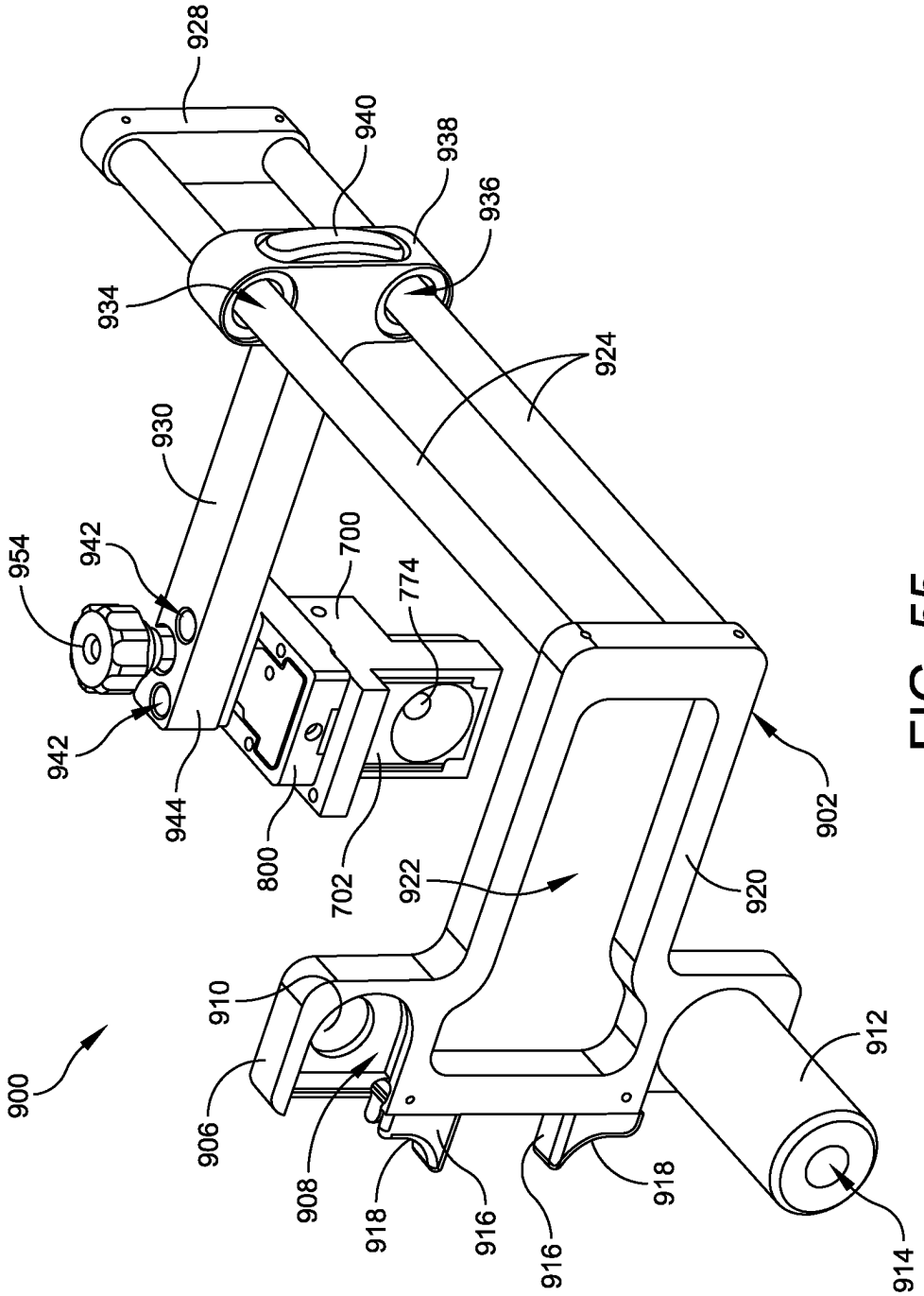
928
940
938
936
934
924
930
954
942
700
774
942
944
800
702
922
920
902
910
900
906
908
918
916
916
918
912
914

FIG. 55

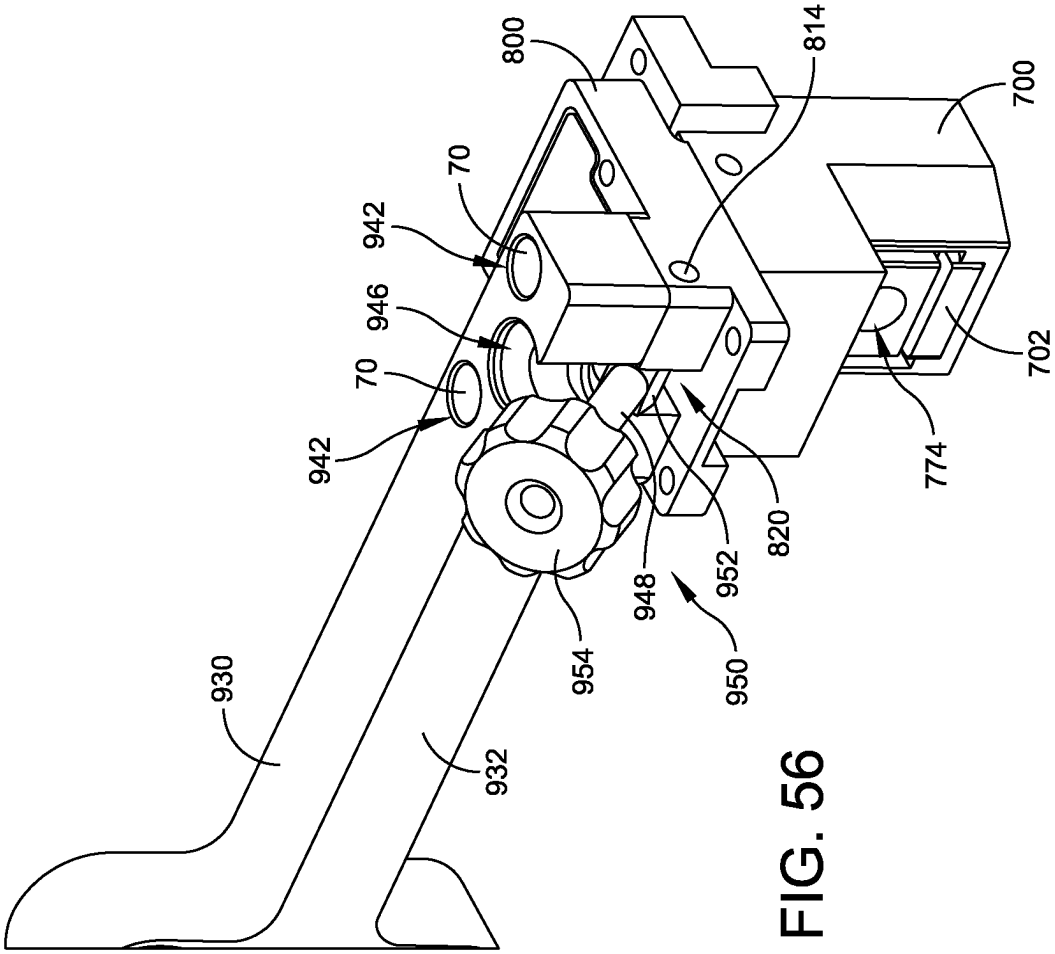

FIG. 56

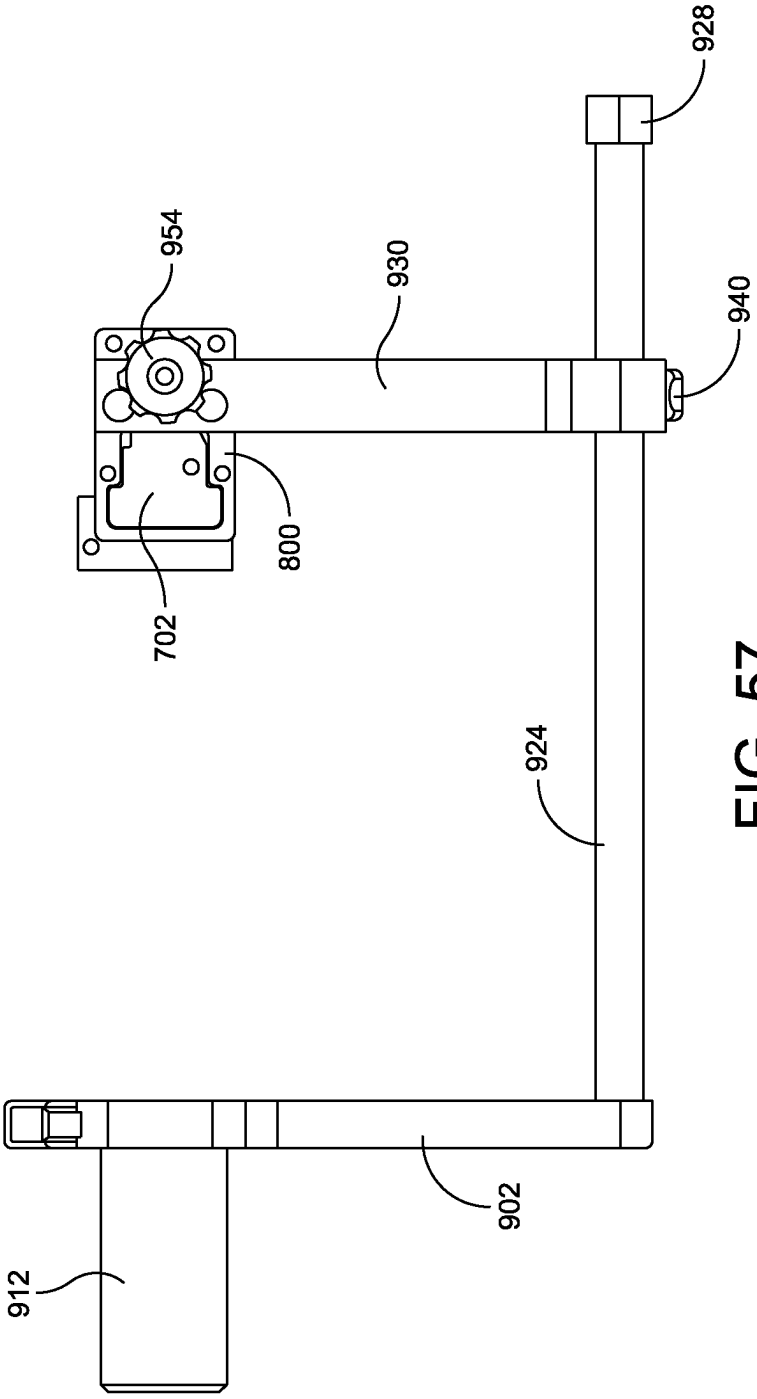

FIG. 57

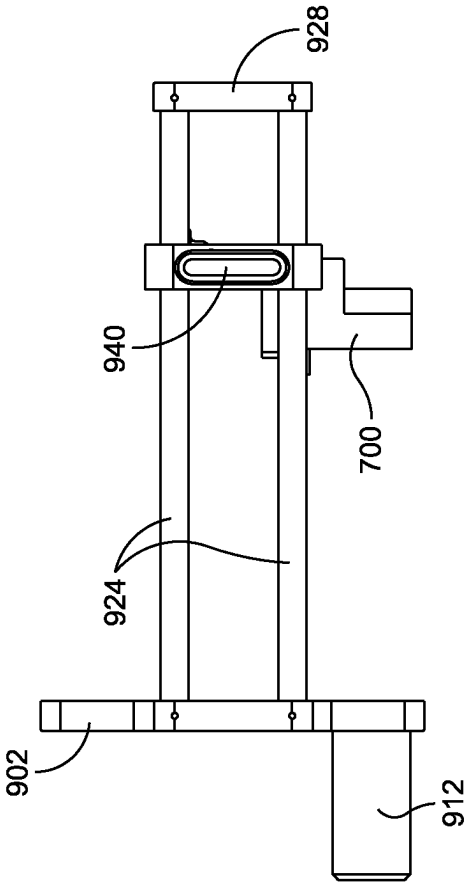

FIG. 58

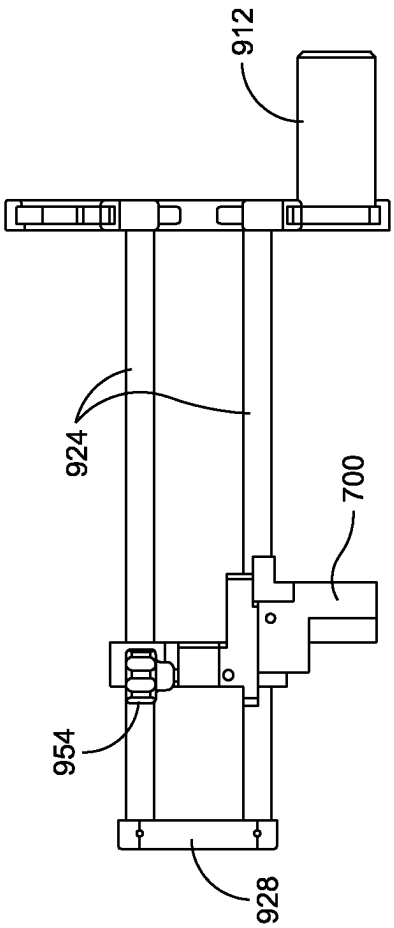

FIG. 59

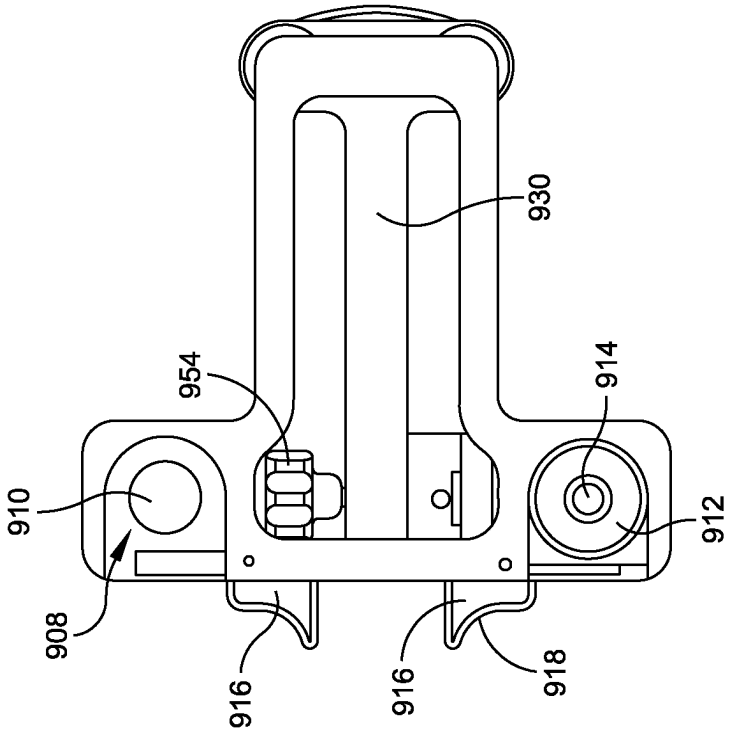
910
908
954
916
916
930
914
912
918

FIG. 61

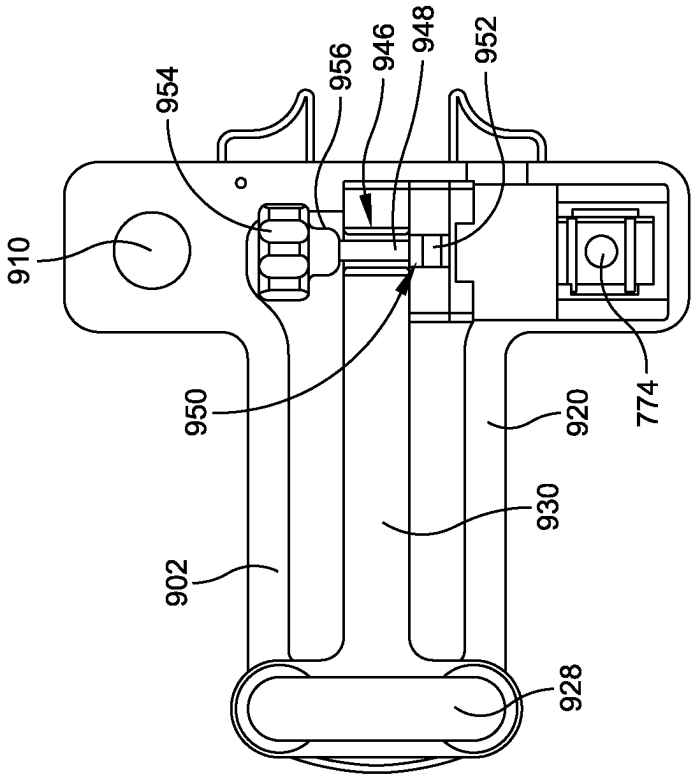
910
954
956
946
948
952
950
902
930
920
774
928

FIG. 60

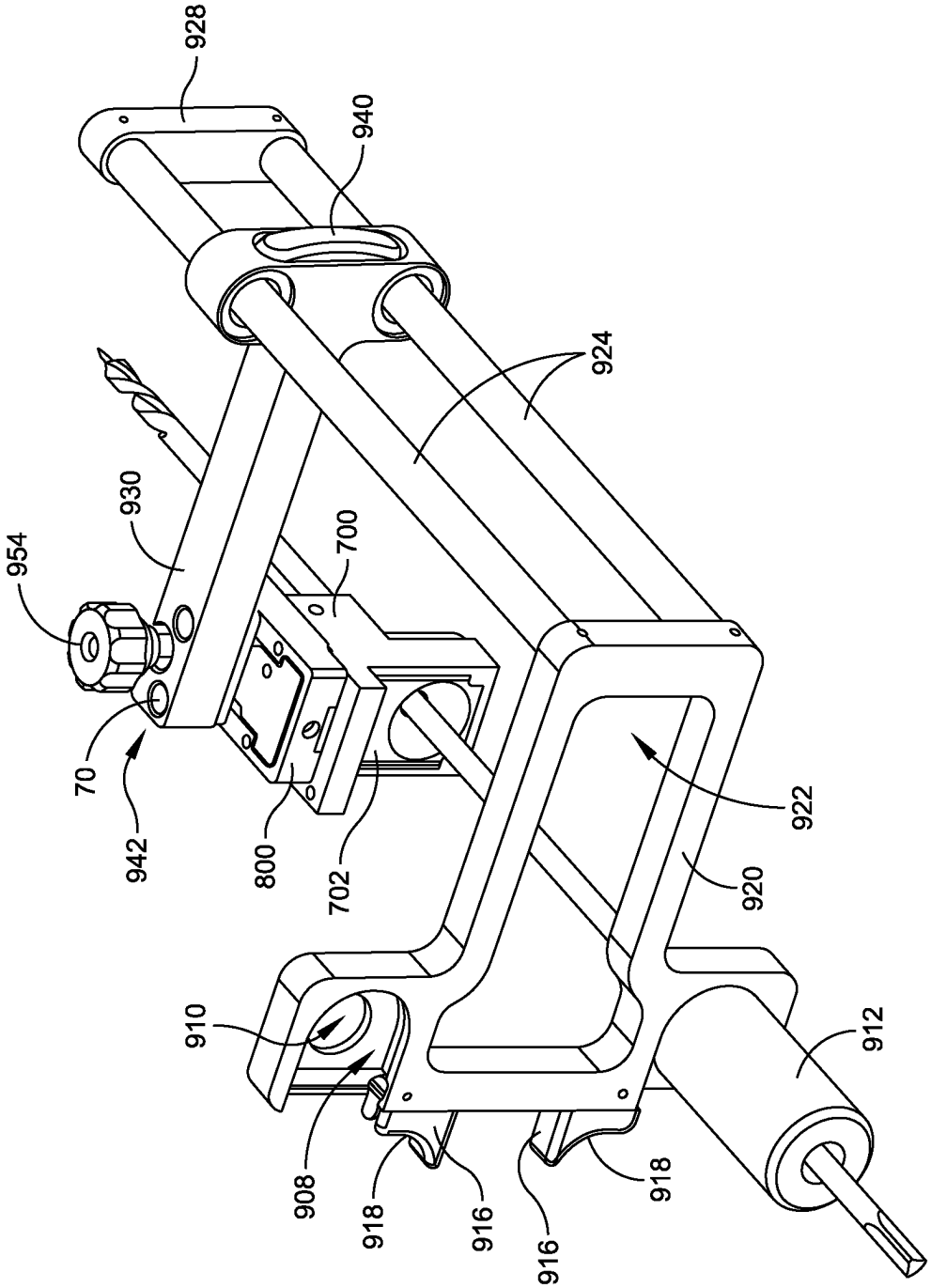
928
940
924
930
954
700
70
942
800
702
922
920
910
912
908
918
916
916
918

FIG. 62

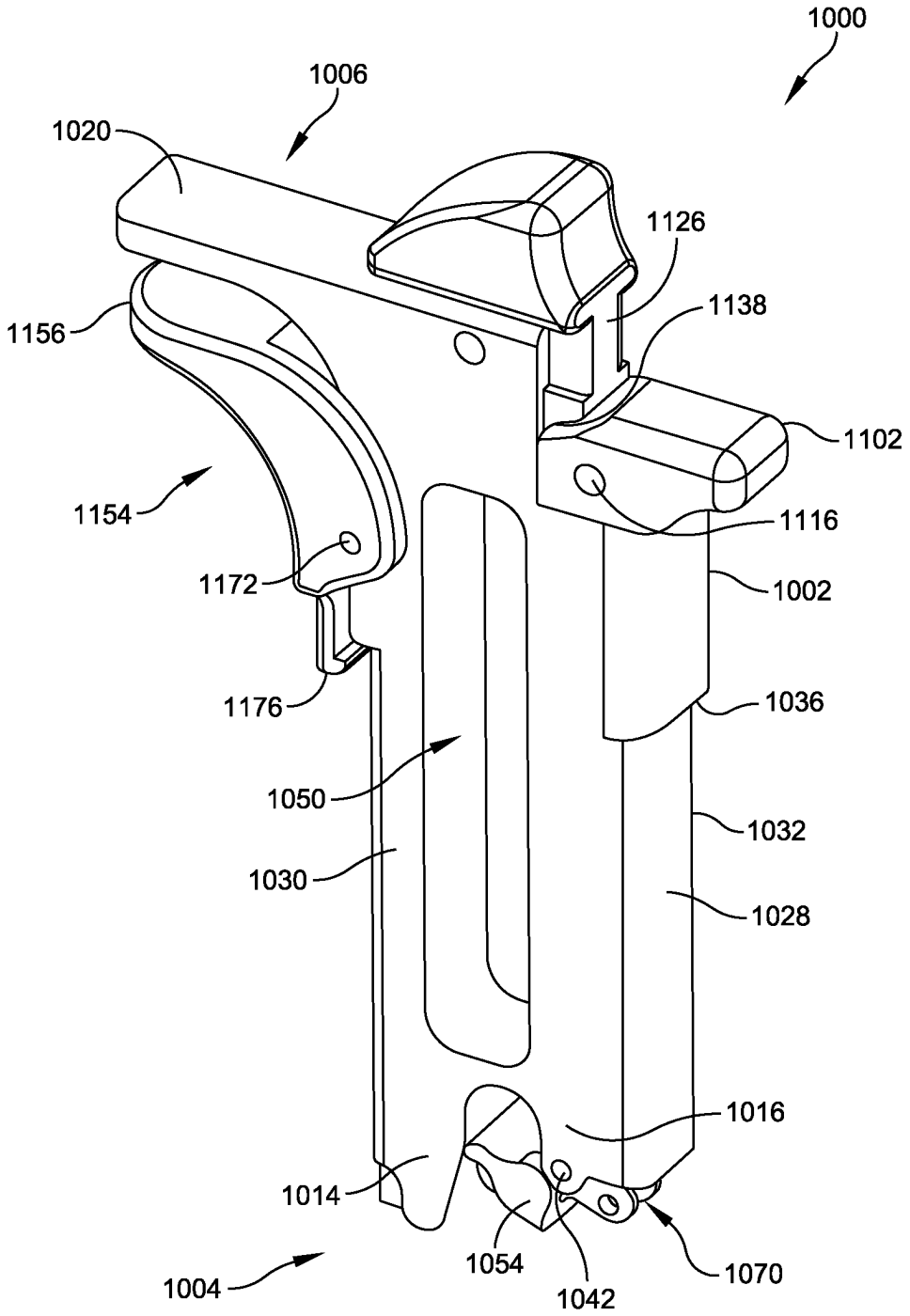
1000
1006
1020
1126
1138
1156
1102
1154
1116
1172
1002
1176
1036
1050
1032
1030
1028
1016
1014
1054
1042
1070
1004

FIG. 63

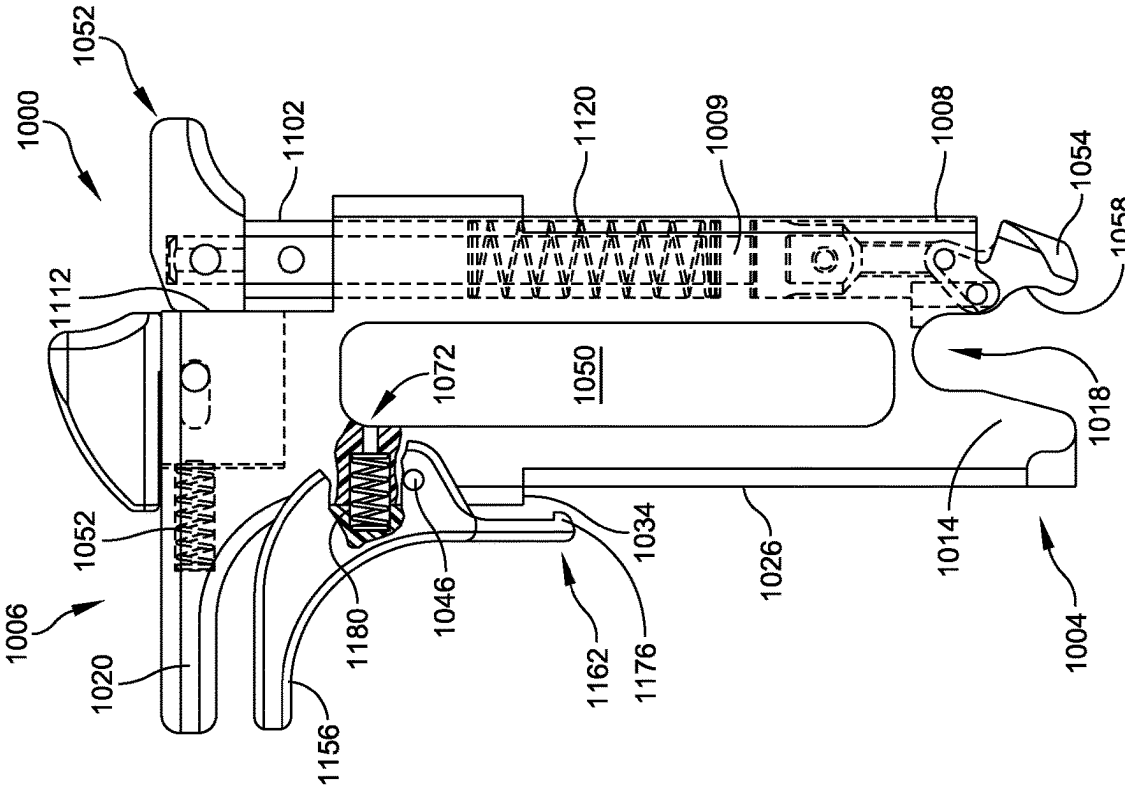
1000
1052
1102
1120
1009
1008
1054
1058
1112
1072
1050
1018
1052
1006
1020
1180
1046
1034
1162
1176
1026
1014
1004
1156

FIG. 65

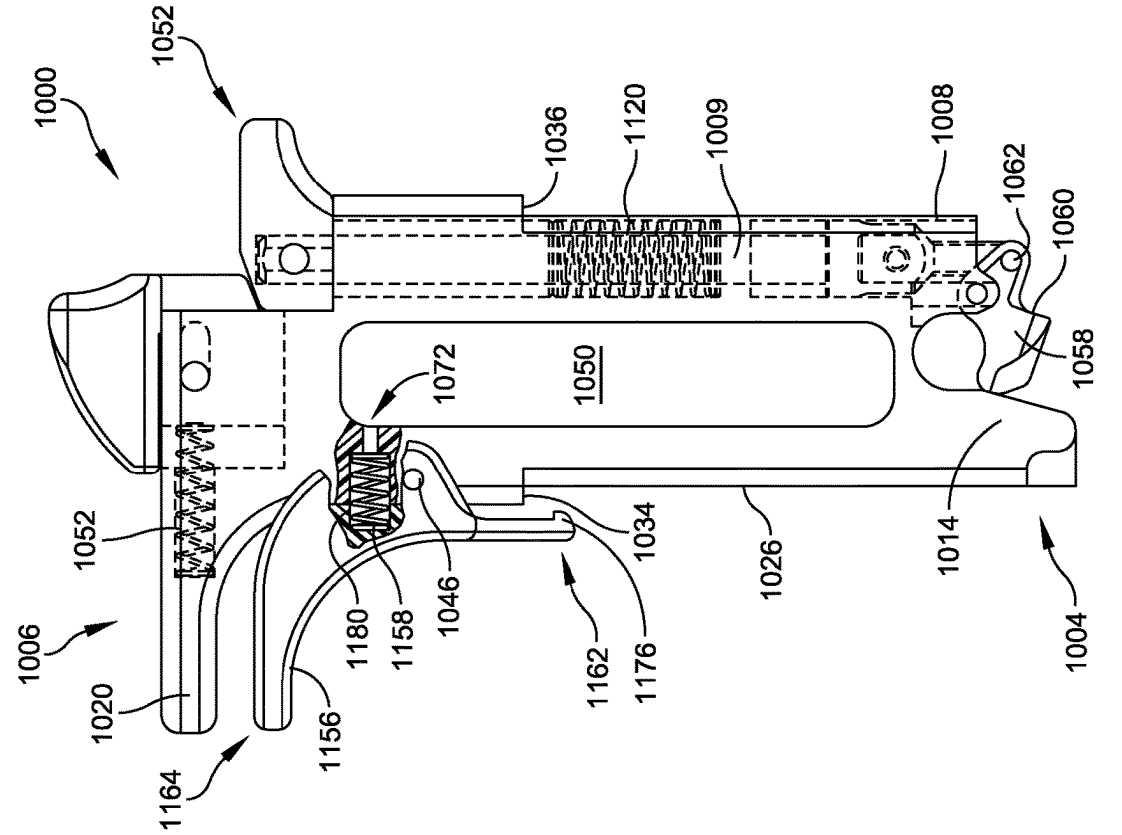
1000
1052
1036
1120
1009
1008
1062
1060
1058
1072
1050
1052
1006
1020
1164
1156
1180
1158
1046
1034
1162
1176
1026
1014
1004

FIG. 64

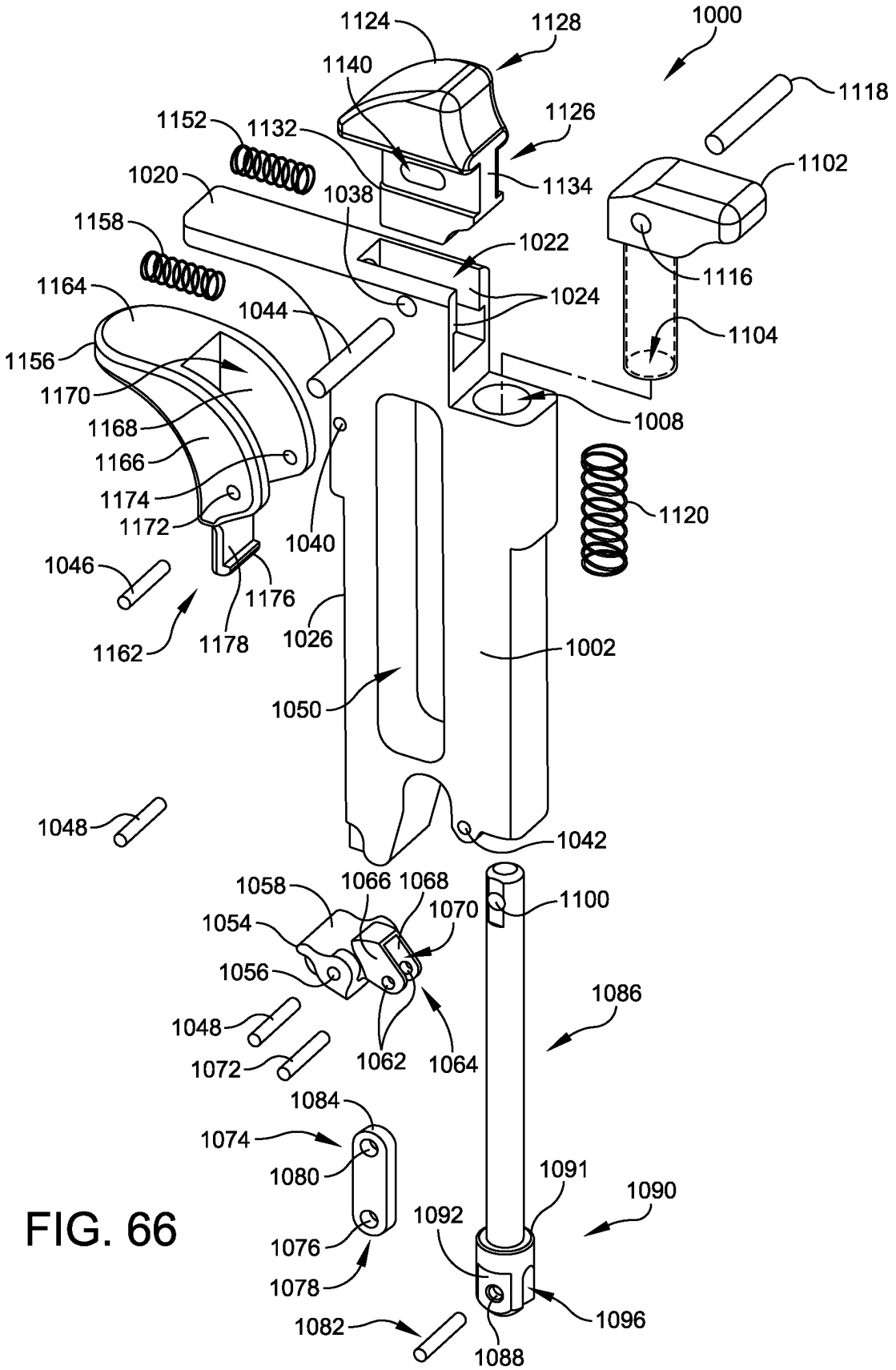
1124
1128
1000
1140
1118
1152
1132
1126
1102
1020
1038
1134
1158
1022
1116
1164
1024
1044
1104
1156
1170
1008
1168
1166
1120
1174
1172
1040
1046
1176
1162
1178
1026
1002
1050
1048
1042
1058
1066
1068
1100
1054
1070
1056
1086
1048
1062
1064
1072
1084
1074
1080
1091
1090
1092
1076
1078
1096
1082
1088

FIG. 66

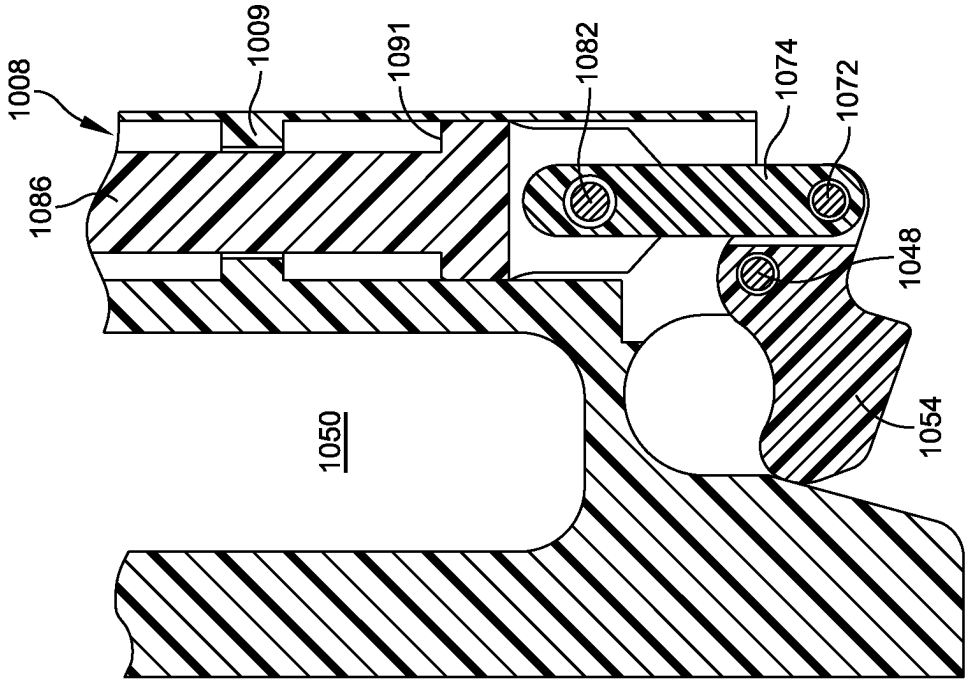
1008
1086
1009
1091
1082
1074
1072
1048
1054
1050

FIG. 68

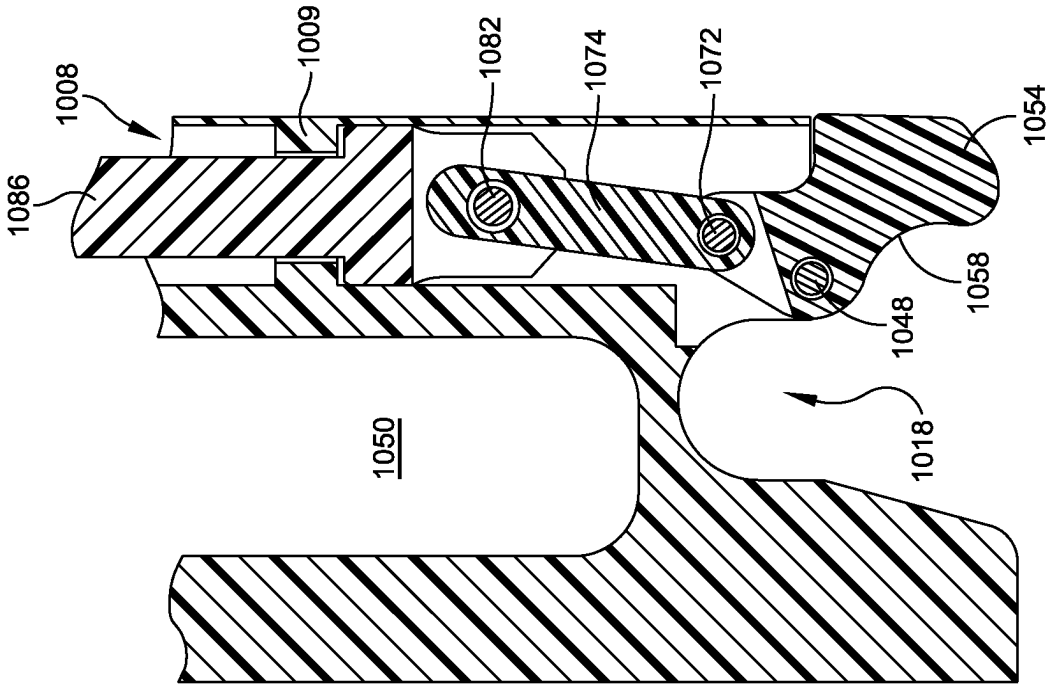
1008
1086
1009
1082
1074
1072
1054
1058
1048
1018
1050

FIG. 67

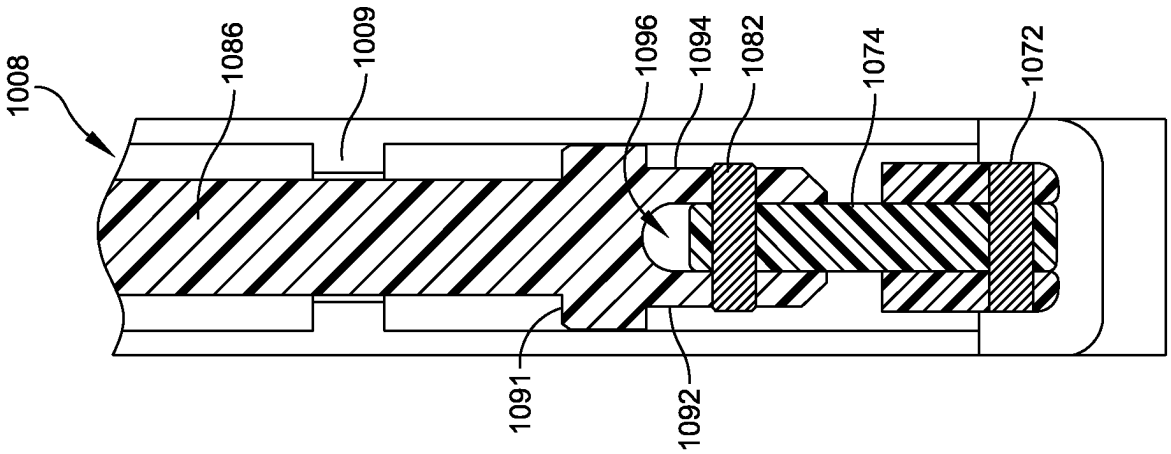

FIG. 69

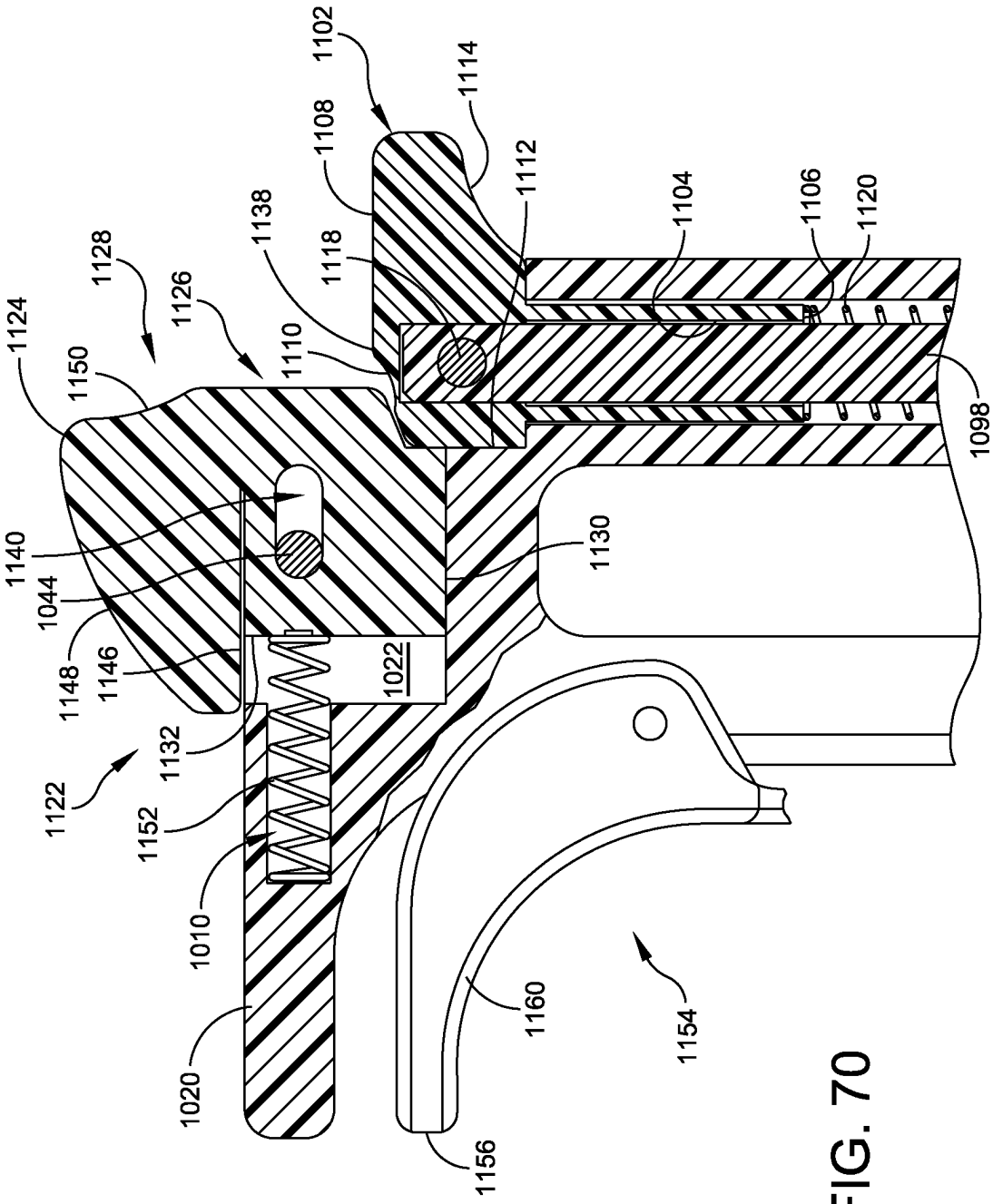
1102
1114
1108
1112
1138
1104
1106
1120
1128
1118
1126
1124
1110
1150
1098
1140
1130
1044
1148
1146
1022
1132
1122
1152
1010
1160
1154
1020
1156

FIG. 70

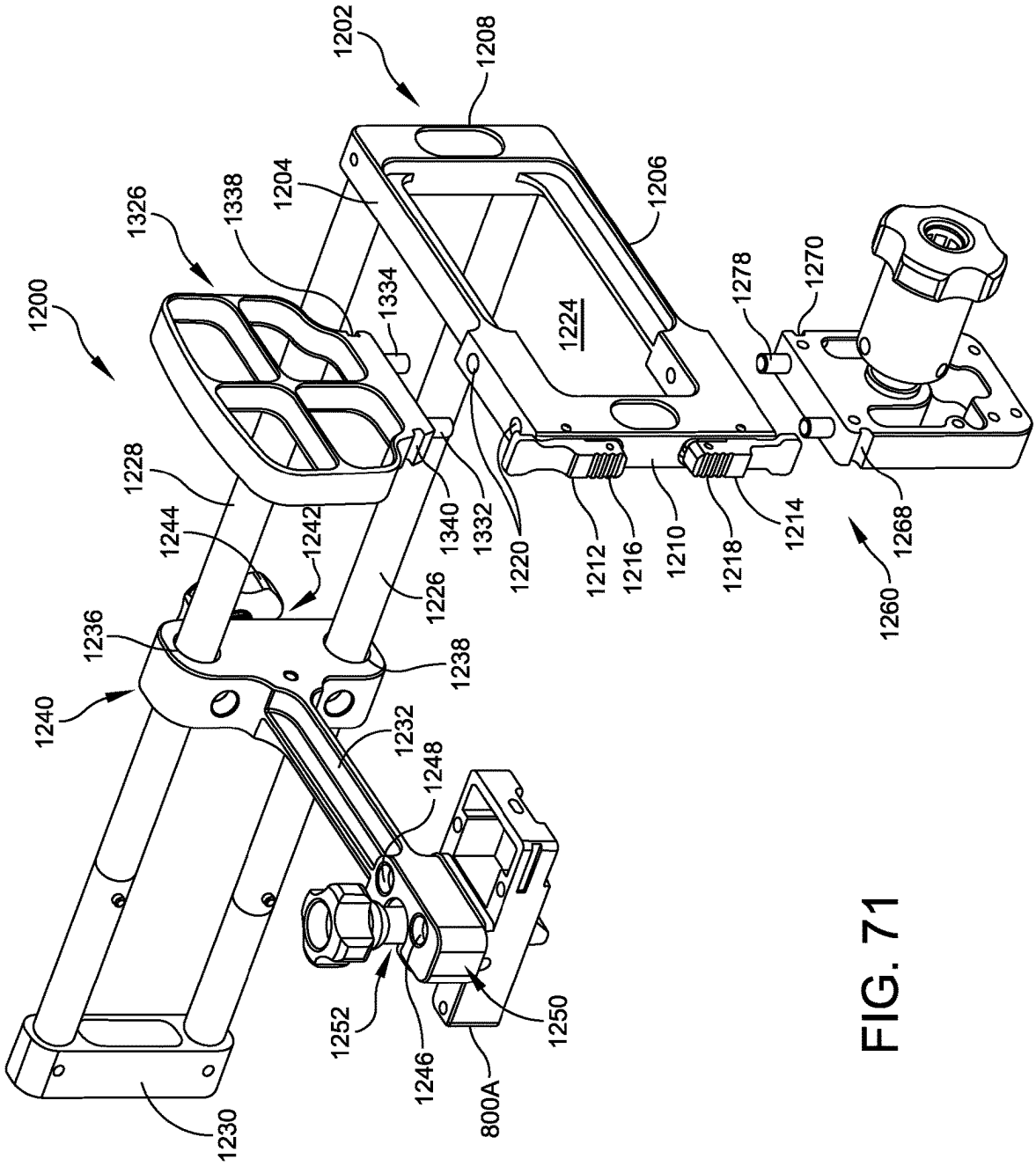
1200
1202
1204
1206
1208
1210
1212
1214
1216
1218
1220
1224
1226
1228
1230
1232
1236
1238
1240
1242
1244
1246
1248
1250
1252
1260
1268
1270
1278
1326
1332
1334
1338
1340
800A

FIG. 71

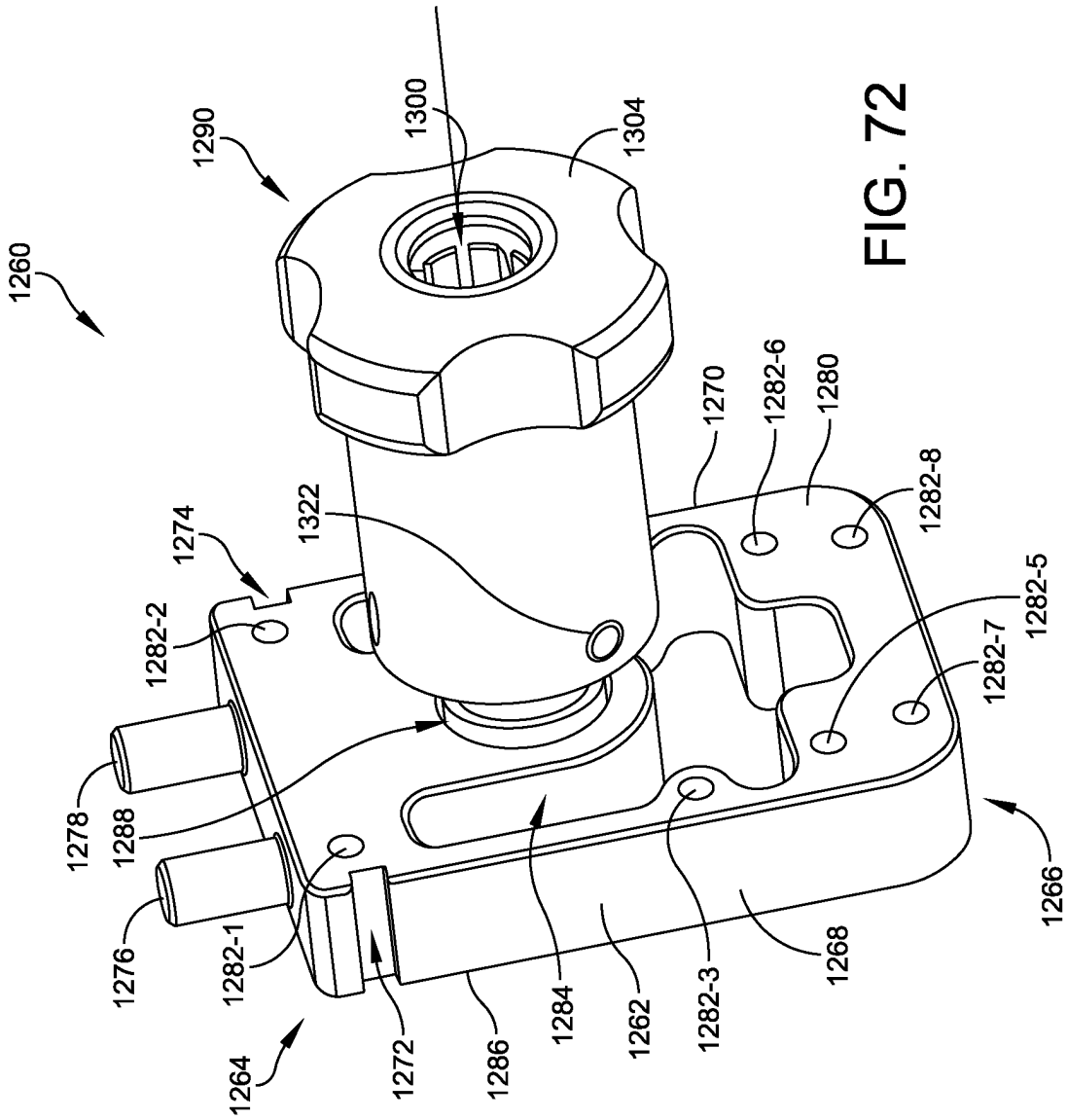
1260
1290
1300
1304
1322
1274
1282-2
1278
1288
1276
1282-1
1264
1272
1286
1284
1262
1282-3
1268
1266
1282-7
1282-5
1282-8
1280
1282-6
1270

FIG. 72

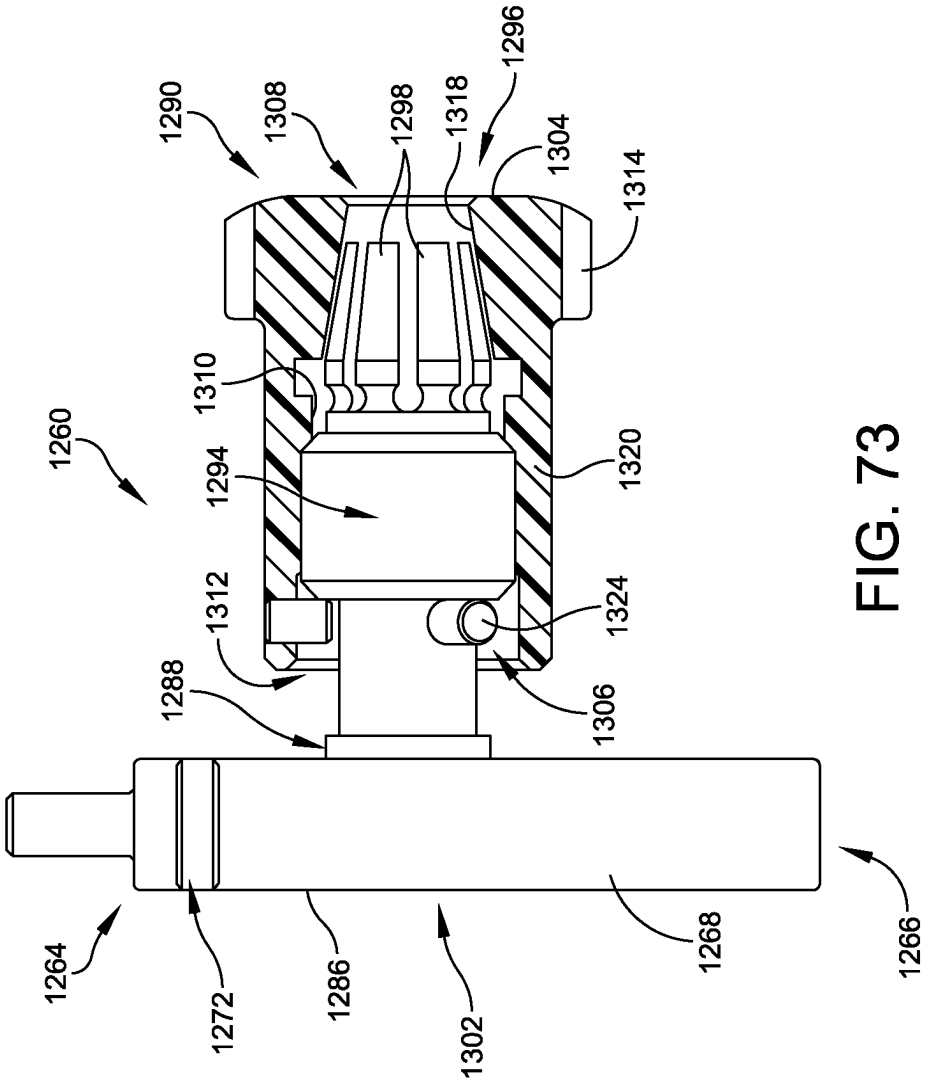
1290
1308
1298
1318
1296
1304
1314
1310
1260
1294
1320
1312
1324
1288
1306
1264
1272
1286
1302
1268
1266

FIG. 73

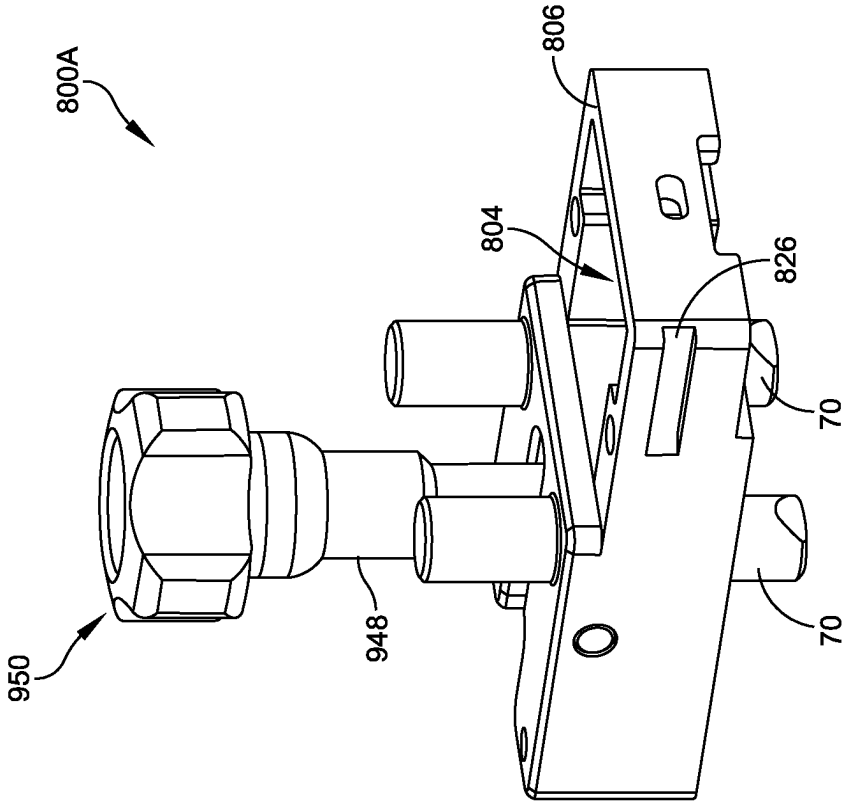

FIG. 74

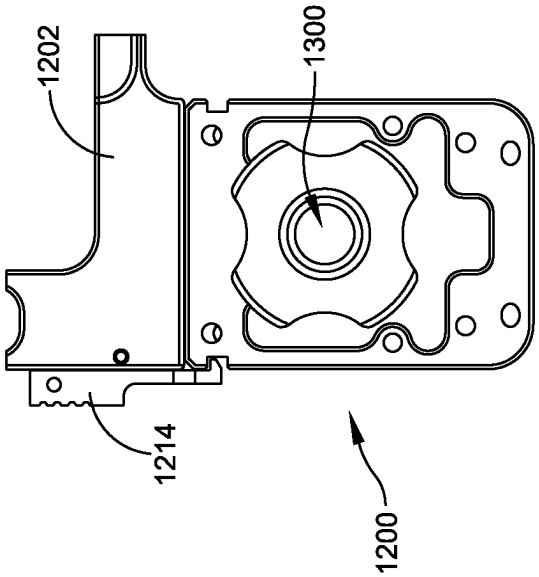

FIG. 76

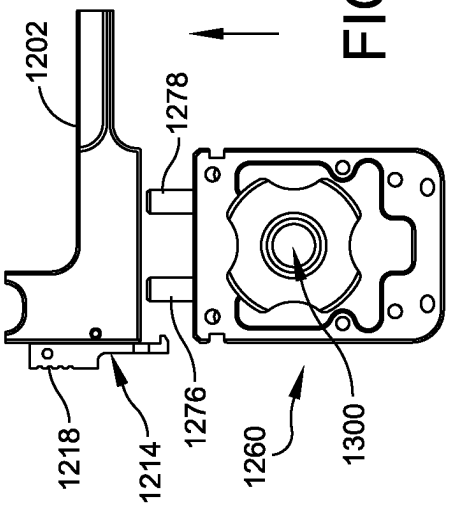

FIG. 75

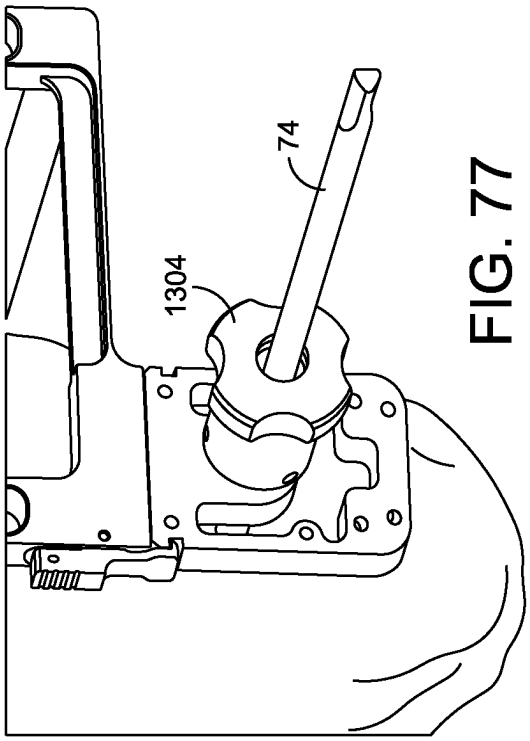

FIG. 77

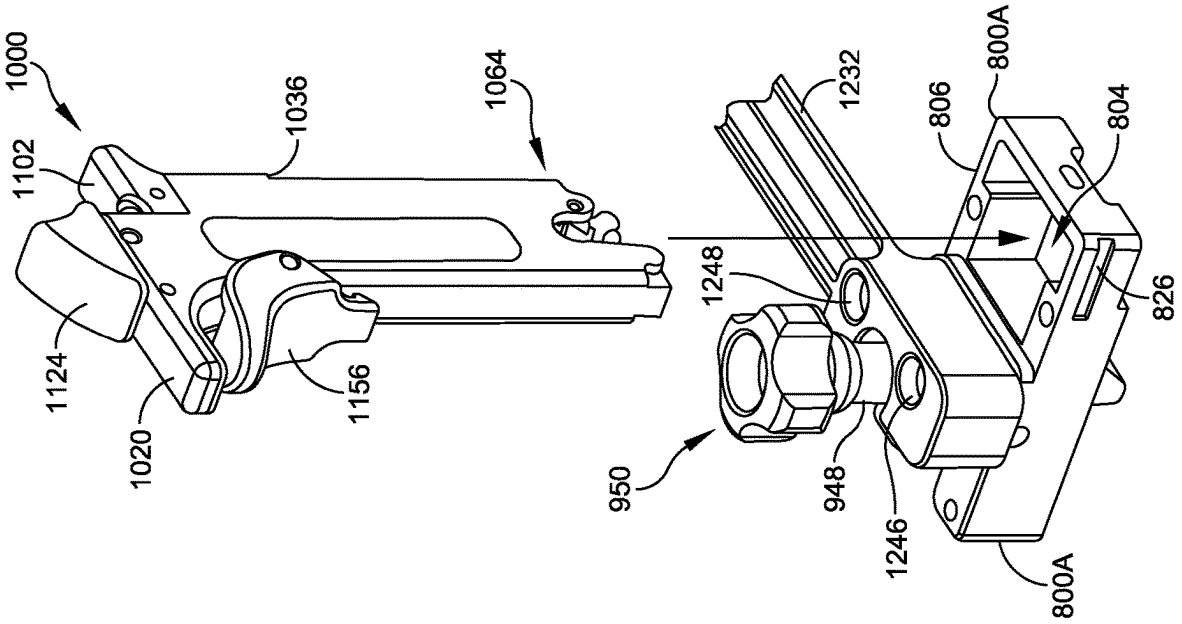
1000
1102
1124
1020
1036
1156
1064
950
1248
1232
948
1246
806
800A
800A
804
826

FIG. 78

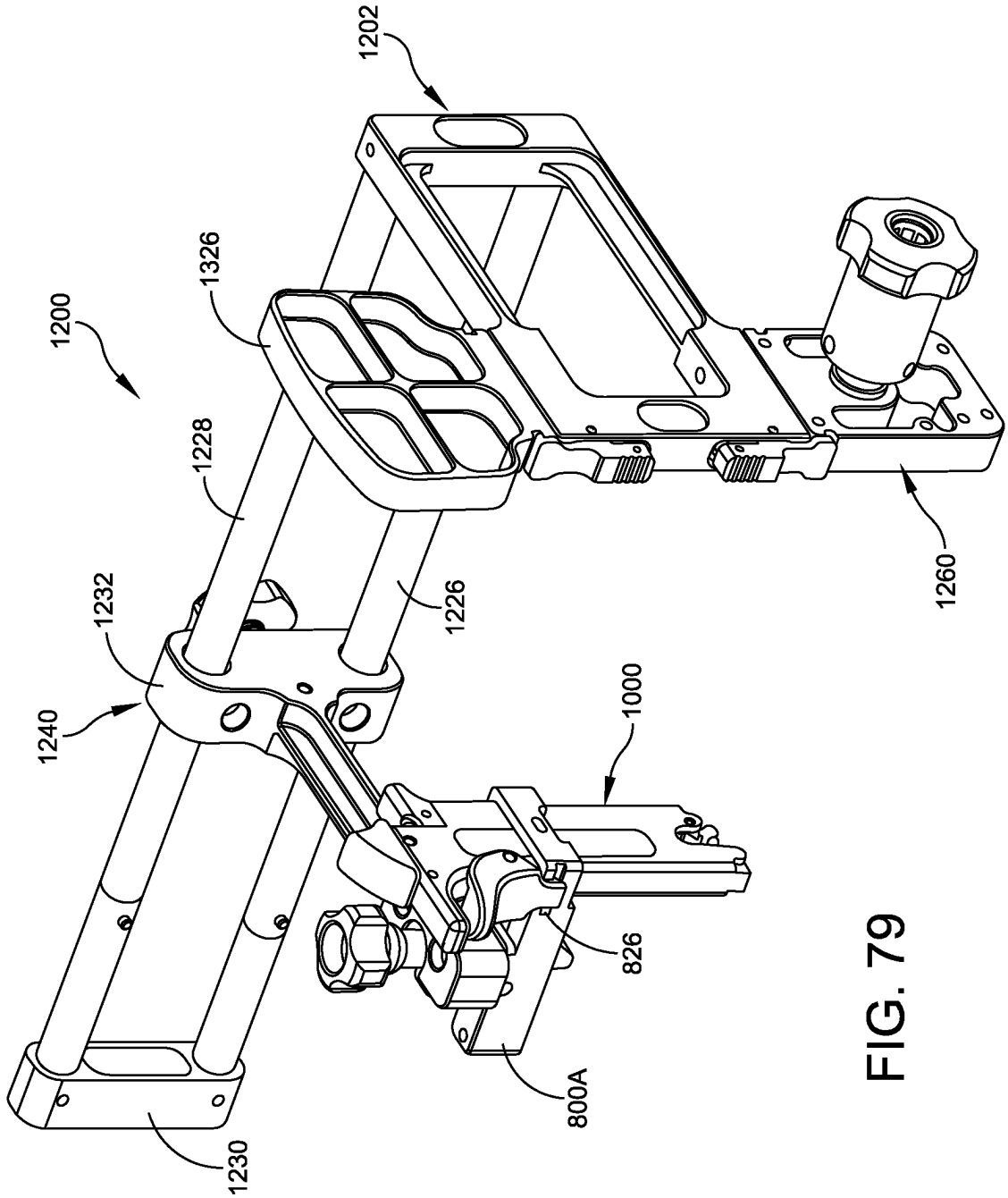

FIG. 79

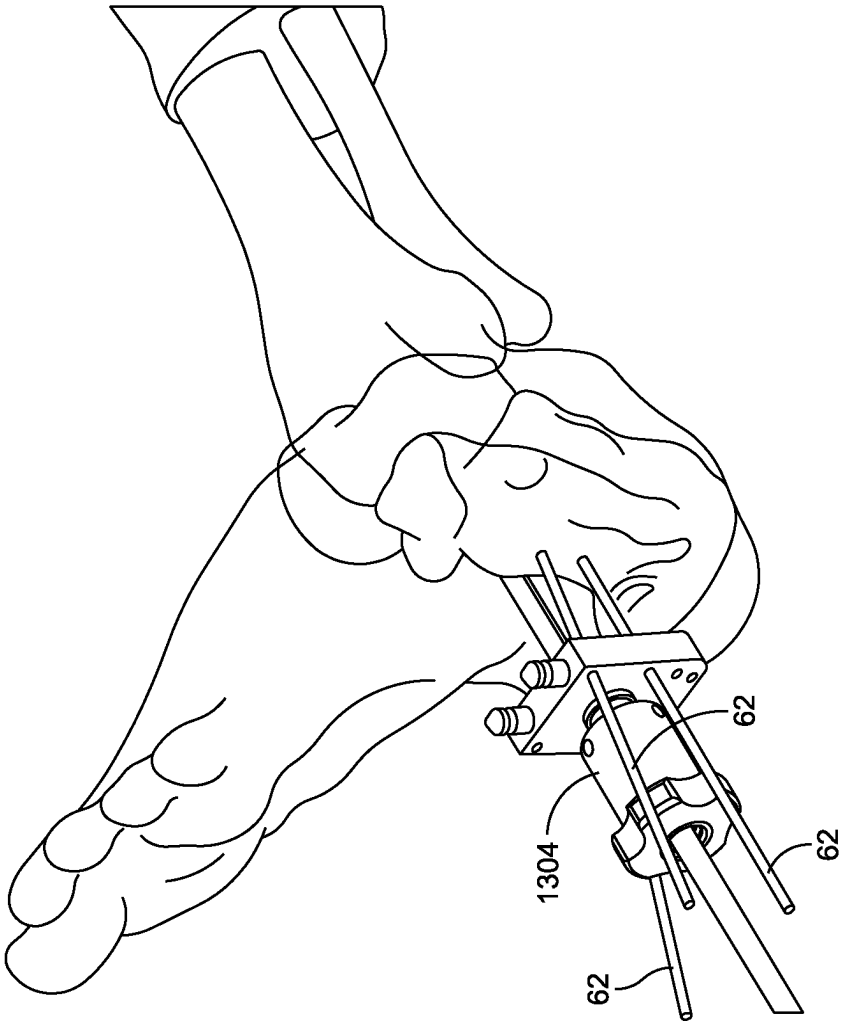

FIG. 80

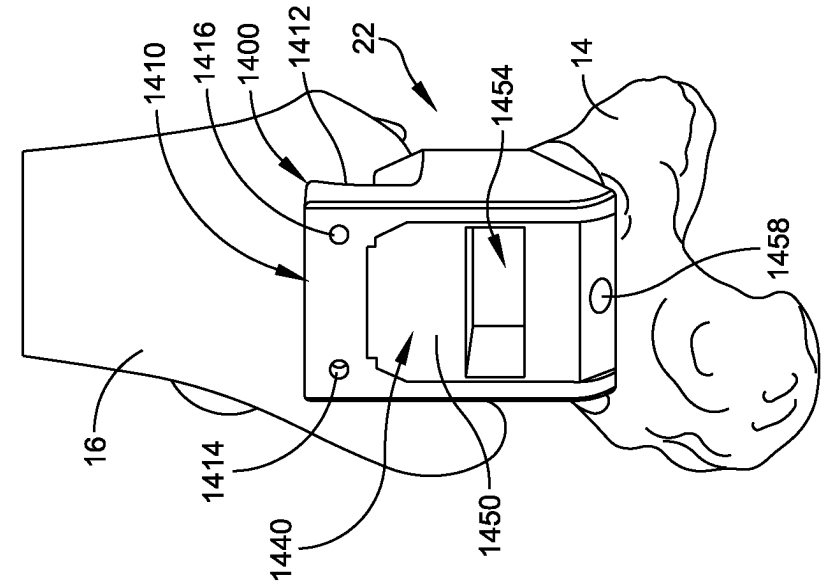

FIG. 83

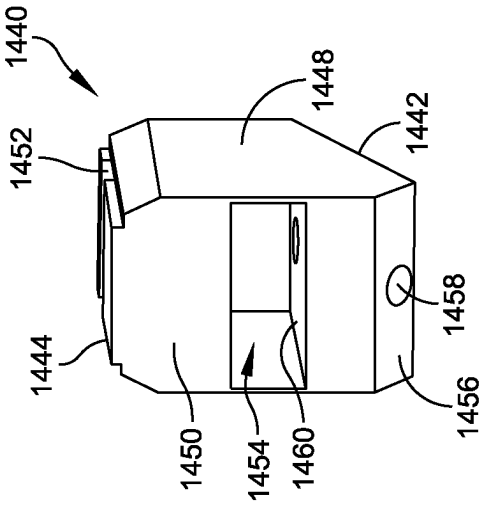

FIG. 82

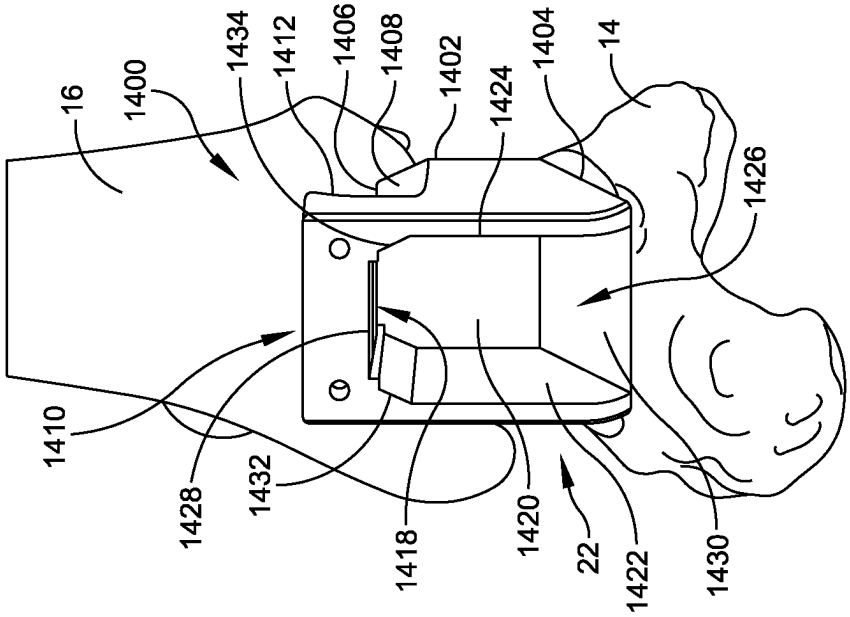

FIG. 81

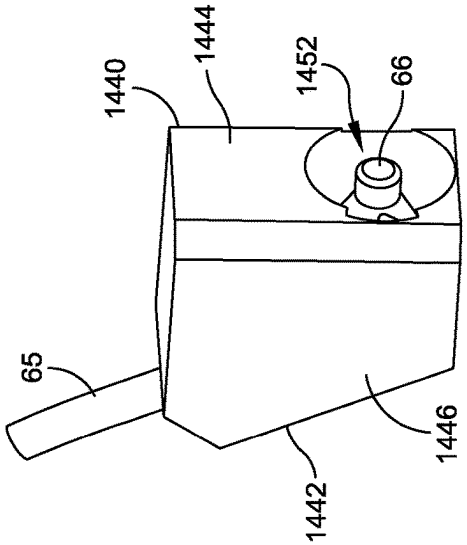

FIG. 85

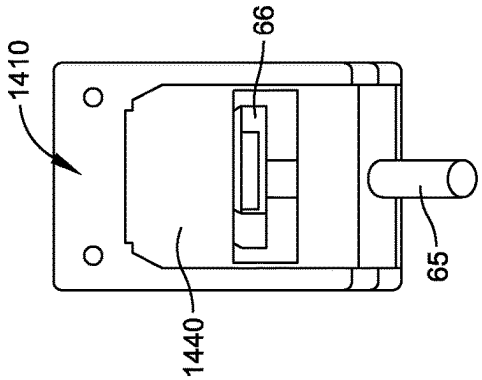

FIG. 86

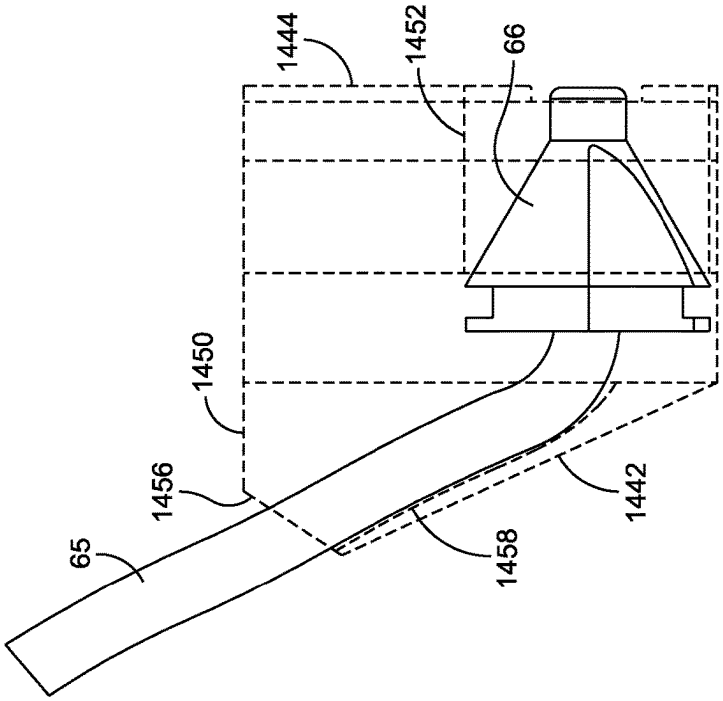

FIG. 84

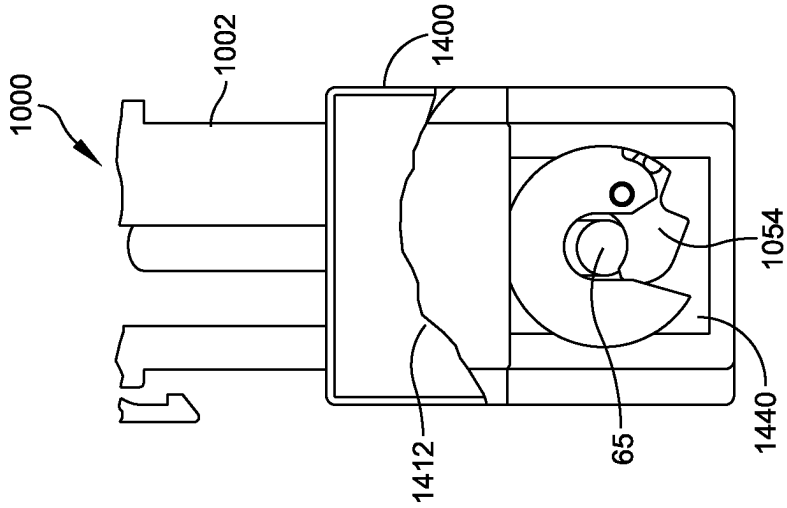

FIG. 89

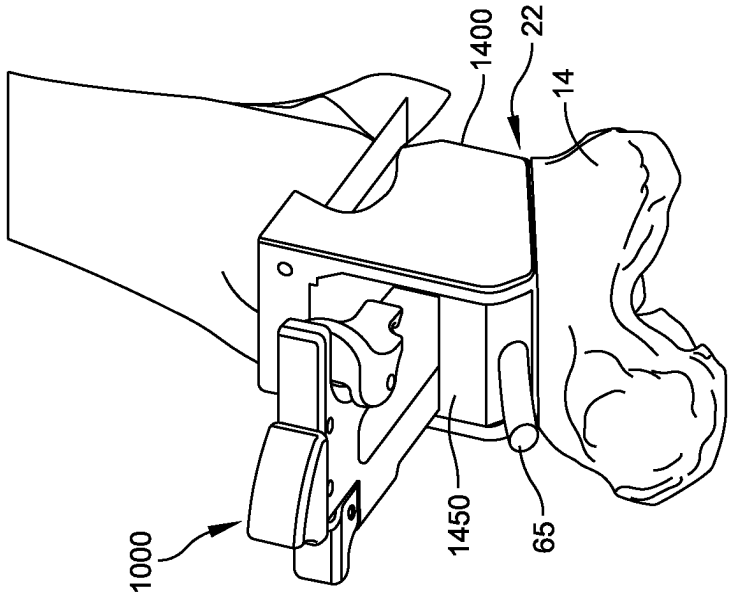

FIG. 88

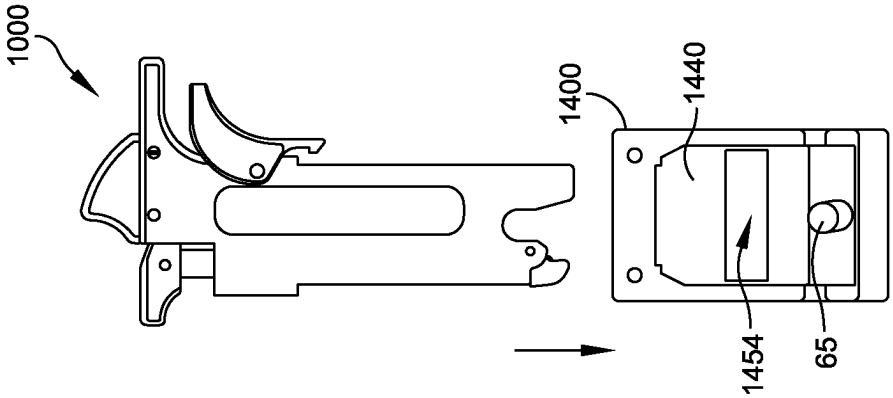

FIG. 87

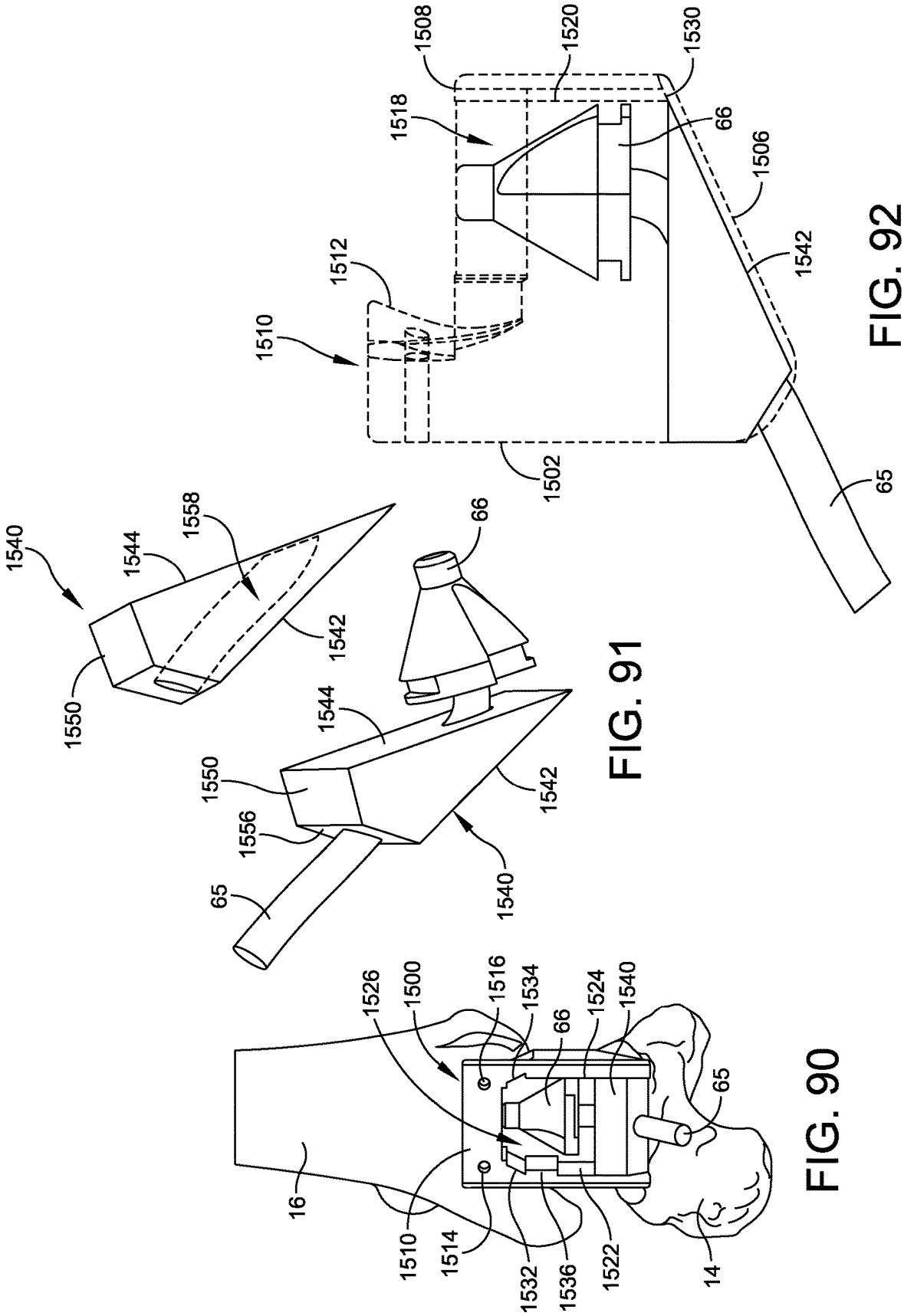

FIG. 92

FIG. 91

FIG. 90

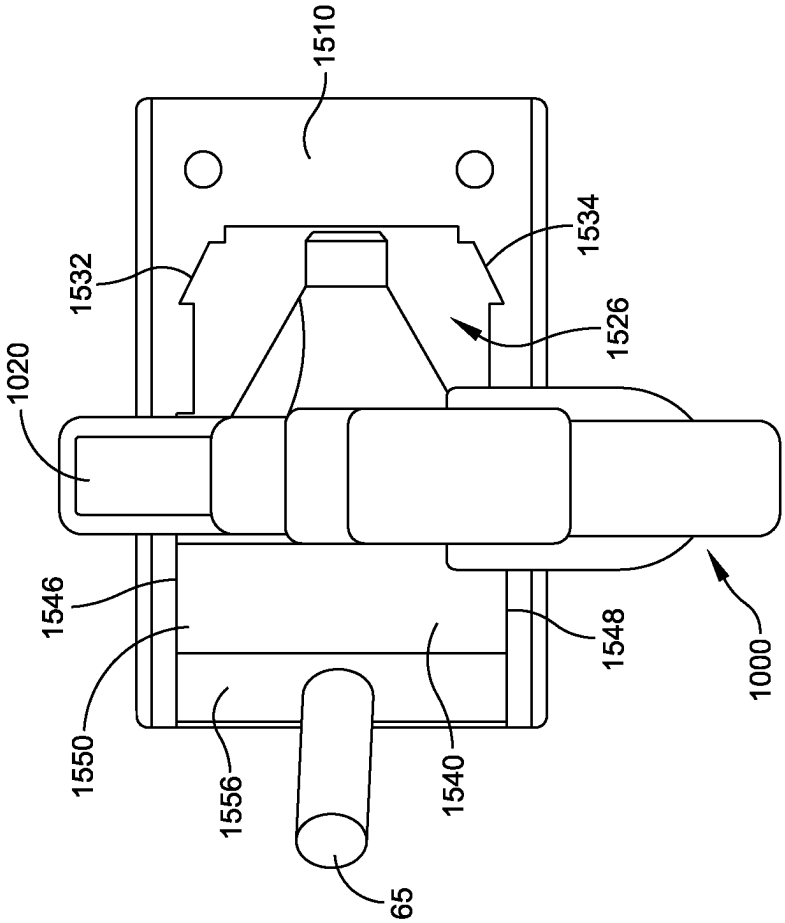
1510
1532
1534
1526
1020
1546
1548
1000
1550
1556
1540
65

FIG. 94

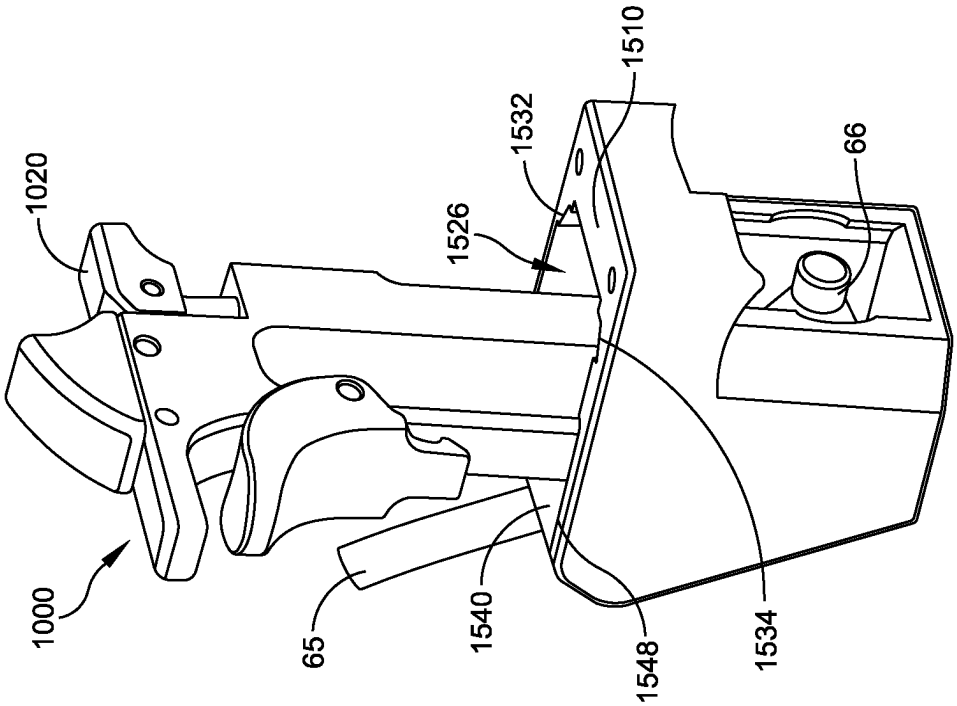
1020
1510
1532
1526
66
1000
65
1540
1548
1534

FIG. 93

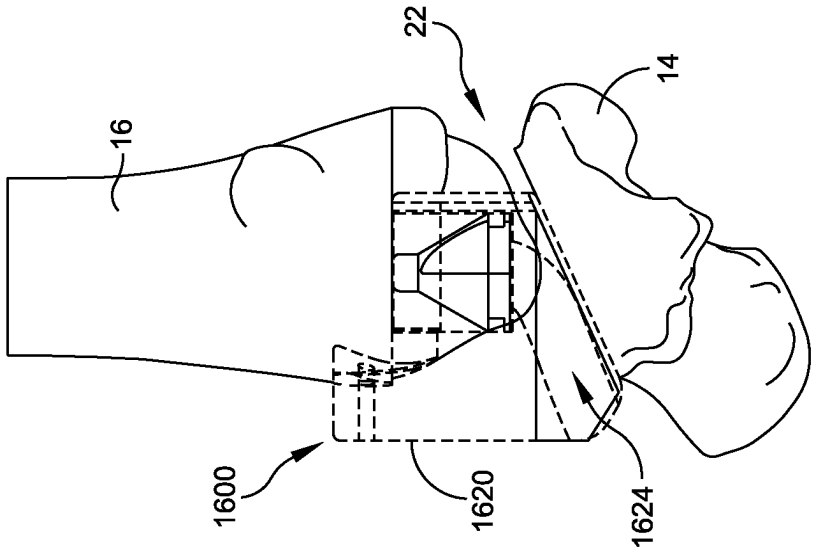

FIG. 97

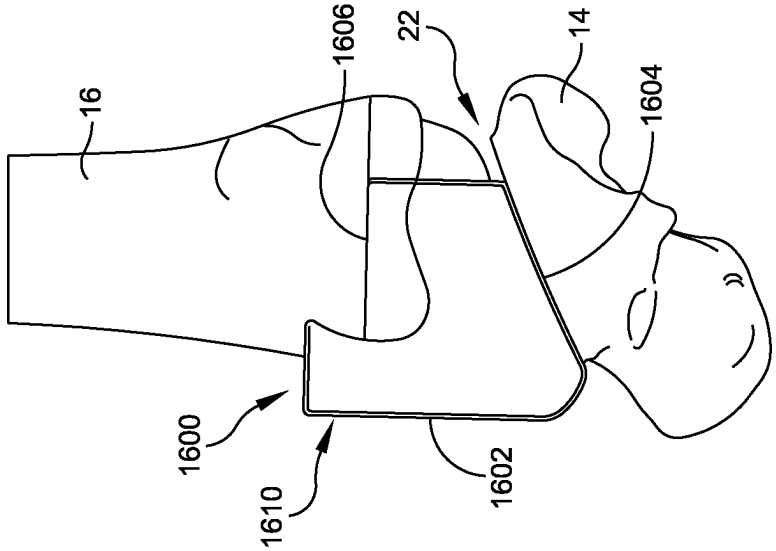

FIG. 96

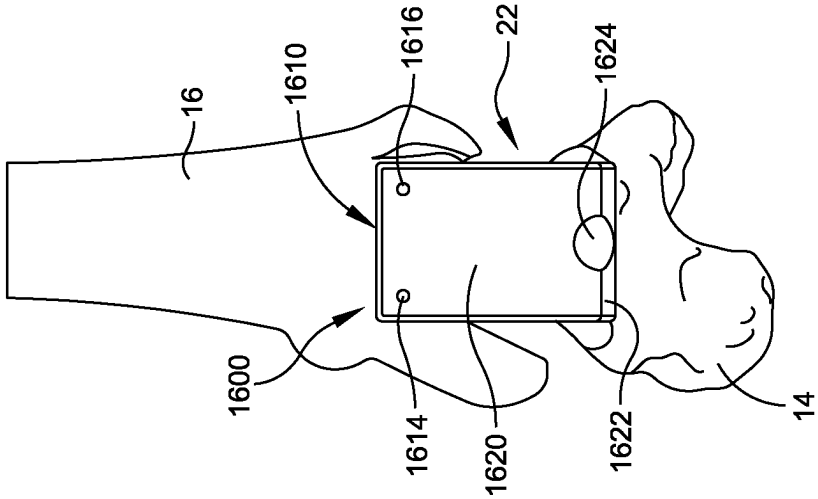

FIG. 95

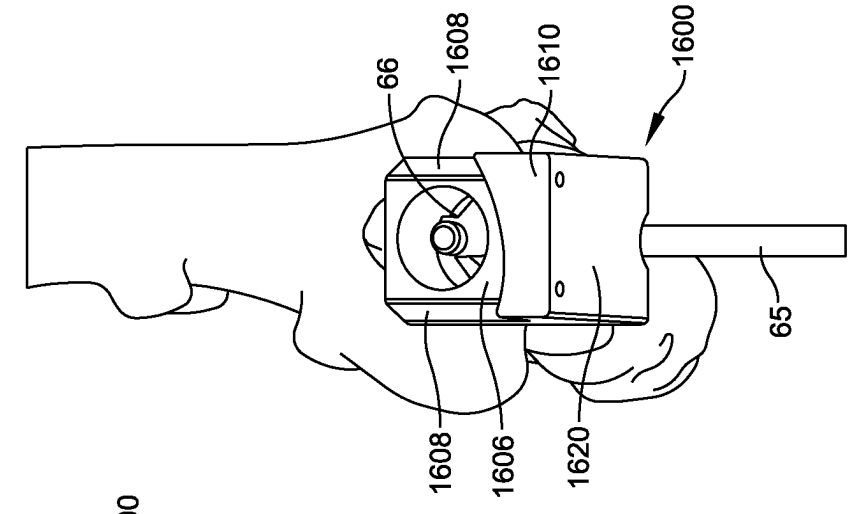

FIG. 100

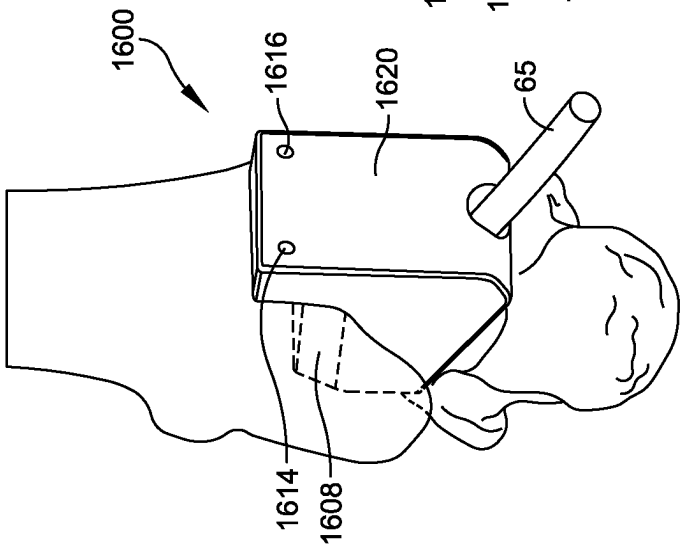

FIG. 99

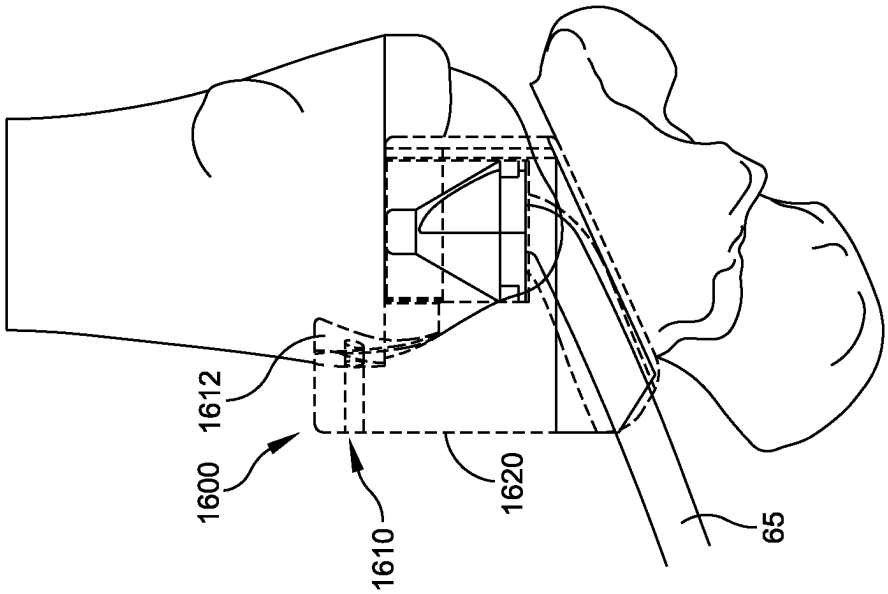

FIG. 98

SYSTEMS AND METHODS FOR INSTALLING AN ORTHOPEDIC IMPLANT

CROSS REFERENCE TO RELATED APPLICATIONS

This application is a continuation of U.S. Ser. No. 16/841,788, filed Apr. 7, 2020, which is a continuation of U.S. patent application Ser. No. 15/933,924, filed Mar. 23, 2018 (now U.S. Pat. No. 10,646,238), which is a division of U.S. patent application Ser. No. 15/440,715, filed Feb. 23, 2017 (now U.S. Pat. No. 9,949,747), which is a continuation of U.S. patent application Ser. No. 14/039,874, filed Sep. 27, 2013 (now U.S. Pat. No. 9,675,365), which is a continuation of U.S. patent application Ser. No. 13/464,175, filed May 4, 2012 (now U.S. Pat. No. 8,808,297), which is a continuation-in-part of U.S. patent application Ser. No. 13/330,091 filed on Dec. 19, 2011 (now U.S. Pat. No. 8,808,303), which claims priority to U.S. Provisional Patent Application No. 61/425,054 filed on Dec. 20, 2010 and to U.S. Provisional Patent Application No. 61/482,657 filed on May 5, 2011, and which is a continuation-in-part of U.S. patent application Ser. No. 12/711,307 filed on Feb. 24, 2010 (now U.S. Pat. No. 9,113,914) claiming priority to U.S. Provisional Patent Application No. 61/154,845 filed on Feb. 24, 2009, the entireties of which are herein incorporated by reference.

FIELD OF DISCLOSURE

The disclosed system and method generally relate to surgical guides. More specifically, the disclosed system and method relate to surgical guides for orthopedic procedures involving an ankle.

BACKGROUND

Total joint replacement prostheses typically include a specially designed jig or fixture to enable a surgeon to make accurate and precise bone resections in and around the joint being prepared to accept the prosthesis. The ultimate goal with any total joint prosthesis is to approximate the function and structure of the natural, healthy structures that the prosthesis is replacing. Should the prosthesis not be properly attached to the joint, i.e., an ankle or knee, the misalignment could result in discomfort to the patient, gait problems, or degradation of the prosthesis.

Many surgical procedures employ the use of intra-operative fluoroscopy to check the alignment of the intramedullary cavities that are prepared to receive the joint replacement prosthesis. However, the use of intra-operative fluoroscopy in the operating room has several drawbacks. One such drawback is that the use of fluoroscopy to check the alignment of intramedullary cavities formed during surgery increases the overall length of the surgical procedure as time is taken to acquire and evaluate the fluoroscopic images. Long surgery times lead to increased tourniquet time forth patient and therefore may increase recovery time.

Another drawback of fluoroscopy is exposing the patient and others in the operating room to the ionized radiation. For example, the U.S. Food and Drug Administration ("FDA") has issued several articles and public health advisories concerning the use of the fluoroscopy during surgical procedures. Consequently, even though steps are taken to protect the patient and other from the ionized radiation, it is virtually impossible to eliminate all risk associated with the ionized radiation.

SUMMARY

In some embodiments, a system includes a cartridge having an elongate body extending from a first end to a second end and having a top side and a bottom side. The cartridge defines a first hole adjacent to the first end that extends through the cartridge from the bottom side to the top side. The top side of the cartridge defines a pair of parallel slots that extend perpendicular with respect to a longitudinal axis of the cartridge. Each slot of the pair of parallel slots is equidistant from a central axis defined by the first hole.

In some embodiments, a system includes a first component, a second component, and a third component. The first component has a body defining a first opening. The second component has a body defining a hollow interior and a first side that defines a second opening. The second component is sized and configured to engage the first component such that the second opening aligns with the first opening. The third component has an elongate body extending from a first end to a second end and having a top side and a bottom side. The third component defines a first hole adjacent to the first end that extends through the cartridge from the bottom side to the top side. The third component is sized and configured to be received within the first opening defined by the first component, the second opening defined by the second component, and the hollow interior of the second component when the first and second components are engaged.

In some embodiments, a method includes inserting a second component into a resected joint space located between a first bone and a second bone; coupling a first component to the second component such that a first opening defined by the first component aligns with a second opening defined by the second component; and inserting a third component into the first opening defined by the first component, the second opening defined by the second component, and a hollow interior of the second component.

BRIEF DESCRIPTION OF THE DRAWINGS

These and other features and advantages of the present invention will be more fully disclosed in, or rendered obvious by, the following detailed description of the preferred embodiment of the invention, which is to be considered together with the accompanying drawings wherein like numbers refer to like parts and further wherein:

FIG. **1** illustrates the bones of a human foot and ankle;

FIGS. **2**A and **2**B are schematic representations of a scanned image of a human foot and ankle joint;

FIG. **3** is a perspective view of tibial and talar resection guides located upon portions of a tibia and a talus;

FIG. **4** is an exploded perspective view of a tibial cutting guide mount and tibial resection guide;

FIG. **5** is a perspective view of a tibial cutting guide disposed within a tibial cutting guide mount located on an inferior portion of a tibia;

FIG. **6** is a front elevational view of a tibial cutting guide disposed within a tibial cutting guide mount located on an inferior portion of a tibia;

FIG. **7** is a side elevational view of a tibial cutting guide disposed within a tibial cutting guide mount located on an inferior portion of a tibia during resection of the tibia;

FIG. **8** is a schematic representation of a resected tibia following application and use of the tibial cutting guide and tibial cutting guide mount;

FIG. **9** is a perspective view of a talar cutting guide disposed within a talar cutting guide mount;

FIG. **10** is an exploded perspective view of the talar cutting guide mount and the talar cutting guide illustrated in FIG. **9**;

FIG. **11** is a perspective view of the talar cutting guide disposed within the talar cutting guide mount located on a superior portion of a talus;

FIG. **12** is a front elevational view of the talar cutting guide disposed within the talar cutting guide mount located on a superior portion of a talus;

FIG. **13** is a side perspective view of the talar cutting guide disposed within the talar cutting guide mount located on a superior portion of a talus during resection of the talus;

FIG. **14** is a schematic representation of a resected talus following application and use of the talar cutting guide and talar cutting guide mount;

FIG. **15** is a schematic representation of a resected joint space following application and use of the talar and tibial cutting guide mounts and cutting guides;

FIG. **16** is a perspective view of one example of a custom tibial drill guide mount;

FIG. **17** is a front elevational view of the tibial drill guide mount illustrated in FIG. **16**;

FIG. **18** is a rear elevation view of the tibial drill guide mount illustrated in FIG. **16**;

FIG. **19** is a bottom elevational view of the tibial drill guide mount illustrated in FIG. **16**;

FIG. **20** is a top elevational view of the tibial drill guide mount illustrated in FIG. **16**;

FIG. **21** is a perspective view of one example of a tibial drill guide;

FIG. **22** is a side elevational view of the tibial drill guide illustrated in FIG. **21**;

FIG. **23** is a top elevational view of the tibial drill guide illustrated in FIG. **21**;

FIG. **24** is an exploded perspective view of the tibial drill guide mount and the tibial drill guide;

FIG. **25**A is a side elevational view of the tibial drill guide disposed within the tibial drill guide mount being inserted into resected joint space;

FIG. **25**B is a perspective view of the assemblage of the tibial drill guide mount and tibial drill guide disposed within the resected joint space;

FIG. **25**C is a perspective view of the assembly of the tibial drill guide mount and tibial drill guide disposed and pinned within the resected joint space;

FIG. **26** is a perspective view of one example of an alignment tool;

FIG. **27** is an exploded perspective view of the alignment tool illustrated in FIG. **26**;

FIGS. **28**A and **28**B illustrate the relative movement permitted between each of the components of the alignment tool illustrated in FIG. **26**;

FIG. **29** is a perspective view of one example of an adapter bar for coupling the assemblage of the tibial drill guide mount and tibial drill guide to the alignment tool;

FIG. **30** is a perspective view of the adapter bar coupled to the assemblage of the tibial drill guide mount and tibial drill guide and to the alignment tool;

FIG. **31** is a top isometric view of another example of an alignment tool/foot holder assembly for use with a tibial drill guide mount and tibial drill guide;

FIG. **32** is a bottom isometric view of the alignment tool/foot holder assembly illustrated in FIG. **31**;

FIG. **33** is an elevational front view of the alignment tool/foot holder assembly illustrated in FIG. **31**;

FIG. **34** is an elevational side view of the alignment tool/foot holder assembly illustrated in FIG. **31**;

FIG. **35** is a top isometric view of another example of an alignment tool/foot holder assembly for use with the tibial drill guide mount and tibial drill guide;

FIG. **36** is a top elevational view of the alignment tool/foot holder assembly illustrated in FIG. **35**;

FIG. **37** is an elevational front view of the alignment tool/foot holder assembly illustrated in FIG. **35**;

FIG. **38** is an elevational side view of the alignment tool/foot holder assembly illustrated in FIG. **35**;

FIG. **39** is a perspective view of another example of a tibial cutting guide mount;

FIG. **40** is a front side elevational view of the tibial cutting guide mount illustrated in FIG. **39**;

FIG. **41** is a side elevational view of the tibial cutting guide mount illustrated in FIG. **39**;

FIG. **42** is a top side view of the tibial cutting guide mount illustrated in FIG. **39**;

FIG. **43** is a bottom side view of the tibial cutting guide mount illustrated in FIG. **39**;

FIG. **44** is a perspective view of a tibial drill guide cartridge for use with the tibial drill guide mount illustrated in FIG. **39**;

FIG. **45** is a front end view of the tibial drill guide cartridge illustrated in FIG. **44**;

FIG. **46** is a bottom side plan view of the tibial drill guide cartridge illustrated in FIG. **44**;

FIG. **47** is a side view of the tibial drill guide cartridge illustrated in FIG. **44**;

FIG. **48** is an exploded perspective view of a mounting plate and dowel pins configured to for use with the tibial drill guide mount illustrated in FIG. **39**;

FIG. **49** is a partially exploded perspective view of a mounting plate and dowel pins configured to for use with the tibial drill guide mount illustrated in FIG. **39**;

FIG. **50** is a partially exploded perspective view of a mounting plate, dowel pins, and tibial drill guide mount configured to receive a tibial drill guide cartridge in accordance with FIG. **44**;

FIG. **51** is a perspective view of the tibial drill guide mount, tibial drill guide cartridge, dowel pins, and mounting plate assembled together;

FIG. **52** is a side view of the assembly illustrated in FIG. **51**;

FIG. **53** is a top side plan view of the assembly illustrated in FIG. **51**;

FIG. **54** is a bottom side plan view of the assembly illustrated in FIG. **51**,

FIG. **55** is a perspective view of a foot holder assembly for use with the assembly illustrated in FIG. **51**;

FIG. **56** is a perspective view of a pivoting arrangement used to secure the assembly illustrated in FIG. **51** to the foot holder assembly;

FIG. **57** is a top side plan view of the foot holder assembly illustrated in FIG. **55**;

FIG. **58** is a side view of the foot holder assembly illustrated in FIG. **55**;

FIG. **59** is an opposite side view of the foot holder assembly illustrated in FIG. **55**;

FIG. **60** is a rear end view of the foot holder assembly illustrated in FIG. **55**;

FIG. **61** is a front end view of the foot holder assembly illustrated in FIG. **55**;

FIG. **62** is a perspective view of a drill being extended through the foot holder assembly and tibial drill guide;

FIG. **63** is an isometric view of one example of a reamer stabilizer in accordance with some embodiments;

FIGS. **64** and **65** illustrate the reamer stabilizer illustrated in FIG. **63** during various stages of operation;

FIG. **66** is an exploded isometric view of the reamer stabilizer illustrated in FIG. **63**;

FIGS. **67** and **68** are cross-sectional detailed view of the coupling assembly of the reamer stabilizer illustrated in FIG. **63** during various stages of operation;

FIG. **69** is a cross-sectional detail view of the coupling between a plunger rod, pivot rod, and reamer guide body in accordance with the reamer stabilizer illustrated in FIG. **63**;

FIG. **70** is a cross-sectional detail view of the locking assembly of the reamer stabilizer illustrated in FIG. **63**;

FIG. **71** is an isometric view of an embodiment of a foot holder assembly;

FIG. **72** is an isometric view of one example of a drill guide assembly that is configured to be releasably coupled to the foot holder assembly illustrated in FIG. **71**;

FIG. **73** is a partial cross-sectional view of the drill guide assembly illustrated in FIG. **72**;

FIG. **74** is an isometric view of one example of a modified mounting member in accordance with the foot holder assembly illustrated in FIG. **71**;

FIGS. **75** and **76** illustrate the coupling of the drill guide assembly illustrated in FIG. **72** to the foot holder assembly illustrated in FIG. **71**;

FIG. **77** illustrates a trocar being received within the drill guide assembly;

FIGS. **78** and **79** illustrate a reamer stabilizer in accordance with FIG. **63** being coupled to the foot holder assembly illustrated in FIG. **71**;

FIG. **80** illustrates the drill guide assembly coupled to the foot of a patient during an operation;

FIG. **81** illustrates one example of an anterior reaming guide mount disposed within a resected joint space in accordance with some embodiments;

FIG. **82** is an isometric view of one example of an insert for use with the anterior reaming guide mount illustrated in FIG. **81**;

FIG. **83** illustrates the insert illustrated in FIG. **82** disposed within the anterior reaming guide mount, which is received within a resected joint space;

FIG. **84** is a side view of a flexible reaming rod and reaming head disposed within the insert illustrated in FIG. **82**;

FIG. **85** is an isometric side view of the flexible reaming rod and reaming head disposed within the insert;

FIG. **86** is a front elevation view of the flexible reaming rod and reaming head disposed within the insert;

FIGS. **87-89** illustrate the reamer stabilizer, anterior reaming guide mount, and insert during various stages of an operation;

FIG. **90** illustrates another example of an anterior reaming guide mount and insert disposed within a resected joint space during an operation;

FIG. **91** are isometric side view of the insert illustrated in FIG. **90**;

FIG. **92** is a side view of the insert disposed within the anterior reaming guide mount in accordance with FIG. **90**;

FIGS. **93** and **94** illustrate the reamer stabilizer in use with the anterior reaming guide mount and insert illustrated in FIG. **90**;

FIGS. **95-100** illustrate another example of an anterior reaming guide mount.

DETAILED DESCRIPTION

This description of preferred embodiments is intended to be read in connection with the accompanying drawings, which are to be considered part of the entire written description. The drawing figures are not necessarily to scale and certain features may be shown exaggerated in scale or in somewhat schematic form in the interest of clarity and conciseness. In the description, relative terms such as "horizontal," "vertical," "up," "down," "top" and "bottom" as well as derivatives thereof (e.g., "horizontally," "downwardly," "upwardly," etc.) should be construed to refer to the orientation as then described or as shown in the drawing figure under discussion. These relative terms are for convenience of description and normally are not intended to require a particular orientation. Terms including "inwardly" versus "outwardly," "longitudinal" versus "lateral" and the like are to be interpreted relative to one another or relative to an axis of elongation, or an axis or center of rotation, as appropriate. Terms concerning attachments, coupling and the like, such as "connected" and "interconnected," refer to a relationship wherein structures are secured or attached to one another either directly or indirectly through intervening structures, as well as both movable or rigid attachments or relationships, unless expressly described otherwise. When only a single machine is illustrated, the term "machine" shall also be taken to include any collection of machines that individually or jointly execute a set (or multiple sets) of instructions to perform any one or more of the methodologies discussed herein. The term "operatively connected" is such an attachment, coupling or connection that allows the pertinent structures to operate as intended by virtue of that relationship. In the claims, means-plus-function clauses, if used, are intended to cover the structures described, suggested, or rendered obvious by the written description or drawings for performing the recited function, including not only structural equivalents but also equivalent structures.

The disclosed systems and methods advantageously utilize custom manufactured surgical instruments, guides, and/or fixtures that are based upon a patient's anatomy to reduce the use of fluoroscopy during a surgical procedure. In some instances, the use of fluoroscopy during a surgical procedure may be eliminated altogether. The custom instruments, guides, and/or fixtures are created by imaging a patient's anatomy with a computer tomography scanner ("CT"), a magnetic resonance imaging machine ("MRI"), or like medical imaging technology prior to surgery and utilizing these images to create patient-specific instruments, guides, and/or fixtures.

Although the following description of the custom patient-specific instruments are described with respect to a foot **10** and ankle **12** (FIG. **1**), one skilled in the art will understand that the systems and methods may be utilized in connection with other joints including, but not limited to, knees, hips, shoulders, and the like. As shown in FIG. **1**, a typical human foot **10** includes an ankle joint **12** formed between a talus **14**, which is disposed on a calcaneus **20**, and a tibia **16** and fibula **18**.

A CT or MRI scanned image or series of images may be taken of a patient's ankle **12** (or other joint) and then converted from, e.g., a DICOM image format, to a solid computer model of the ankle including the calcaneus, talus, tibia, navicular, and fibula to determine implant alignment, type, and sizing using specialized modeling methods that are often embodied in computer software. Computer generated solid models that are derived from the data of the CT or MRI scan image will often include precise and accurate information regarding the surface contours surrounding the structures that have been imaged, e.g., the surface topography of the bones or contour of fascia that have been imaged. It will be understood that by surface topography it is meant the

location, shape, size and distribution of surface features such as concavities and prominences or the like.

The methods disclosed in U.S. Pat. No. 5,768,134, issued to Swaelens et al., which is incorporated by reference herein in its entirety, have been found to yield adequate conversions of data of CT or MRI scan images to solid computer models. In some embodiments, images are made of a foot **10**, i.e., the calcaneus **20**, talus **14**, tibia **16**, and fibula **18** of a patient using a CT or MRI machine, or other digital image capturing and processing unit as is understood by one skilled in the art. The image data is processed in a processing unit, after which a model **50** is generated using the processed digitized image data as illustrated in FIGS. **2**A and **2**B.

Interactive processing and preparation of the digitized image data is performed, which includes the manipulation and introduction of additional extrinsic digital information, such as, predefined reference locations **52** for component positioning and alignment so that adjustments to the surgical site **54**, that will require resection during surgery, may be planned and mapped onto computer model **50** (FIGS. **2**A and **2**B). After the interactive processing of the digitized image data, it is possible to go back to original CAD data to obtain a higher resolution digital representation of the patient specific surgical instruments, prostheses, guides, or fixtures so as to add that digital representation to the patient's image data model.

FIG. **3** illustrates a pair of custom cutting guides for an ankle replacement surgery including a tibial resection guide mount **100** and a talar resection guide mount **102**, which are formed and mounted to the patient's lower tibia **16***a* and upper talus **14***a*. A custom tibial drill guide mount **200** (FIGS. **16-20**) is also formed and configured to be received within ankle space created by using the custom tibial and talar resection guide mounts **100**, **102**. Although custom cutting guides are described for preparing a patient's talus, tibia, and femur, one skilled in the art will understand that other cutting guides may be implemented and that custom guides may be created for other joints including, but not limited to, the knee, hip, shoulder, or other joint.

Tibial resection guide mount **100** illustrated in FIG. **3** is formed from a resilient polymer material of the type that is suitable for use in connection with stereo lithography, selective laser sintering, or like manufacturing equipment. Resection guide mount **100** includes a unitary body including a cruciform tibial yolk **104** projecting upwardly from a base **106** that further defines a guide receptacle recess **108** as best seen in FIG. **4**. Cruciform yolk **104** includes a pair of spaced apart arms **110**, **112** that project outwardly from a central post **114**. Arms **110**, **112** and central post **114** each have a conformal bone engaging surface **116** that is complementary to the contours of a corresponding portion of the patient's lower tibia **16***a* as illustrated in FIG. **7**. Through the previously discussed imaging operations, conformal bone engaging surfaces **116** of arms **110**, **112** and central post **114** are configured for complementary matching with anatomical surface features of a selected region of the patient's natural bone. For tibial resection guide mount **100**, the selected bone region comprises the lower surfaces of the patient's tibia **16***a*.

As best seen in FIGS. **3-5**, a pilot block **118** projects outwardly from central post **114**, adjacent to the intersection of arms **110**, **112**. A support block **120** (FIG. **4**) is located on base **106** in spaced relation to pilot block **118**. Guide receptacle recess **108** is defined by a pair of wings **122**, **124** that extend outwardly from either side of central post **114** in opposite directions on base **106**, with support block **120** located between them. Each wing **122**, **124** includes a respective pylon **126** projecting outwardly from base **106** so as to provide lateral support for tibial resection guide **132** (FIGS. **4** and **5**). An elongate slot **128** is defined transversely in a central portion of base **106** below pilot block **118**, but above support block **120**. Each wing **122**, **124** also defines a respective slot **130** that is oriented at an angle relative to central post **114**. In some embodiments, slots **130** are disposed at a non-perpendicular angle relative to central post **114**, although one skilled in the art will understand that slots **130** may be disposed at perpendicular angles with respect to the direction in which central post **114** extends. Slots **128** and **130** are sized and shaped to allow a typical surgical saw **60** (FIG. **7**) of the type often used for bone resection, to pass through from a correspondingly positioned and sized slot in resection guide **132** without contact, or with only incidental contact with resection guide mount **100**.

Referring again to FIG. **4**, tibial resection guide **132** includes a pair of arms **134** that project downwardly and outwardly in diverging angular relation from the ends of a bridge beam **136**. The shape of tibial resection guide **132** is complementary to the shape of guide receptacle recess **108** as defined by the inwardly facing surfaces of pilot block **118**, support block **120**, and pylons **126**. Bridge beam **136** defines an elongate slot **138** that aligns with slot **128** when tibial resection guide is coupled to and supported by resection guide mount **100**. Arms **134** each define a respective slot **140** that align with a respective slot **130**.

The inwardly facing surfaces **142** of pilot block **118**, support block **120**, and pylons **126**, that together define guide receptacle recess **108**, have a shape that is complementary to the outer profile of tibial resection guide **132**. Guide receptacle recess **108** is sized so as to accept tibial resection guide **132** with a "press-fit". By press-fit it should be understood that the inwardly facing surfaces **142** of pilot block **118**, support block **120**, and pylons **126** are sufficiently resilient to deflect or compress elastically so as to store elastic energy when tibial resection guide **132** is pushed into guide receptacle recess **108**. Of course, it will also be understood that tibial resection guide **132** will have an outer peripheral shape that is complementary to the circumferential shape of guide receptacle recess **108**, but slightly larger in size, for press-fit embodiments. Also, tibial resection guide **132** may be retained within guide receptacle recess **108** by only frictional engagement with the inwardly facing surfaces of pilot block **118**, support block **120**, and pylons **126**. In some embodiments, tibial resection guide **132** can simply slide into guide receptacle recess **108** without operative contact or only incidental engagement with the inwardly facing surfaces of pilot block **118**, support block **120**, and pylons **126**.

Referring now to FIGS. **9** and **10**, a talar resection guide mount **102** is formed from a resilient polymer material of the type that is suitable for use in connection with stereo lithography, selective laser sintering, or the like manufacturing equipment, e.g., a polyamide powder rapid prototype material is suitable for use in connection with selective laser sintering. Talar resection guide mount **102** also includes a conformal bone engaging surface **144** that is complementary to the contours of a corresponding portion of the patient's upper talus **14***a* (FIGS. **11** and **13**). Through the previously discussed imaging operations, conformal bone engaging surface **144** of talar resection guide mount **102** is configured for complementary matching with anatomical surface features of a selected region of the patient's natural bone. For talar resection guide mount **102**, the selected bone region comprises the outer, upper surfaces of the patient's talus.

Talar resection guide mount **102** comprises a unitary block that defines a central guide receptacle recess **146** and a pair of through-bores **148** (FIG. **10**). Guide receptacle recess **146** is defined by the inwardly facing surfaces **150** of a pair of wings **152**, **154** that project outwardly, in opposite directions from a base **156**. Each wing **152**, **154** includes a pylon **158** projecting upwardly to support guide housing **160** such that an elongate slot **162** is defined within base **156** and below guide housing **160** (FIGS. **10** and **11**). Slot **162** is sized and shaped to allow a typical surgical saw **60**, of the type often used for bone resection, to pass through from a correspondingly positioned and sized slot **164** in talar resection guide **166** without contact, or with only incidental contact with talar resection guide locator **102** (FIGS. **11** and **13**). An annular wall **168**, having a shape that is complementary to the outer profile of talar resection guide **166**, projects outwardly in substantially perpendicular relation to a back wall and so as to further defines guide receptacle recess **146**.

Still referring to FIGS. **9** and **10**, talar resection guide **166** includes a pair of confronting, parallel plates **170**, **172** that define elongate slot **164** between them, and are joined to one another at their ends by wings **174**. In this way, the shape of talar resection guide **166** is complementary to the shape of guide receptacle recess **146** as defined by the inwardly facing surfaces **150** of wings **152**, **154**, base **156**, and pylons **158**. Guide receptacle recess **146** is sized so as to accept talar resection guide **166** with a press-fit. Of course, it will also be understood that talar resection guide **166** will have an outer peripheral shape that is complementary to the circumferential shape of guide receptacle recess **146**, but slightly larger in size, for press-fit embodiments. Also, talar resection guide **166** may be retained within guide receptacle recess **146** by only frictional engagement with the inwardly facing surfaces **150** of wings **152**, **154**, base **156**, and pylons **158**. In some embodiments, talar resection guide **166** can simply slide into guide receptacle recess **146** without operative contact or only incidental engagement with the inwardly facing surfaces **150** of wings **152**, **154**, base **156**, and pylons **158**.

Tibial drill guide mount **200** illustrated in FIGS. **16-20** also may be fabricated from a resilient polymer material of the type that is suitable for use in connection with stereo lithography, selective laser sintering, or the like manufacturing equipment, e.g., a polyamide powder repaid prototype material is suitable for use in connection with selective laser sintering. As shown in FIGS. **16-20**, tibial drill guide mount **200** includes a somewhat rectangular body **204** that defines an aperture **206** that extends from a top surface **208** of body **204** to a bottom surface **210** of body **204**. Top surface **208** of body **204** may include a pair of chamfers **212** that are sized and configured to be mate against the resected surfaces of the lower tibia **16***a* (FIG. **8**). Put another way, the top or upper surface **208** of body **204**, including chamfers **212**, is complementary to the geometry and locations of slots **138** and **140** of tibial resection guide **132**.

Front side **214** of body **204** defines one or more blind holes **216**. As illustrated in the embodiment shown in FIG. **17**, body **204** may define three blind holes **216-1**, **216-2**, and **216-3**. In some embodiments, blind holes **216-1** and **216-2** may be reamed holes that are sized and configured to receive a dowel pin, and blind hole **216-3** may also be a reamed hole for receiving a dowel pin or blind hole **216-3** may be threaded for engaging a screw as described below.

Aperture **206** may have a circular cross sectional area and include a shoulder **218** having a reduced diameter compared to aperture **206** and includes an anti-rotational feature **220** as best seen in FIG. **20**. Anti-rotational feature **220** of shoulder **218** may include one or more flats or other geometric structure(s) to prevent tibial drill guide **202** from rotating with respect to tibial drill guide mount **200** when tibial drill guide **202** is disposed within aperture **206**.

Extending from body **204** of tibial drill guide mount **200** are tibial engagement structure **222** and talar engagement structure **224**. The outer surface **226** of tibial engagement structure **222** may have a rectangular shape that is substantially planar, and the internal and substantially conformal engagement surface **228** of tibial engagement structure **222** may be somewhat convex for engaging the tibia **16** of the patient. Tibial engagement structure **222** may define one or more holes **230** for receiving a k-wire or pin as described below.

Talar engagement structure **224** may also include a substantially planar and rectangular outer surface **232**. The lower portion **234** of talar engagement structure **224** may be a conformal surface having a geometry that matches the geometry of the talar bone **14** (FIG. **14**). Talar engagement structure **224** may also define one or more holes **236** sized and configured to receive a k-wire as described below.

Tibial drill guide **202** illustrated in FIGS. **21-23** is preferably fabricated from a material having more structural integrity than tibial drill guide mount **200** to enable drill guide **202** to guide a drill bit without being damaged. Examples of materials include, but are not limited to, metals, ceramics, or the like. Drill guide **202** has a cylindrically shaped first portion **238** that is sized and configured to be received within the portion of aperture **206** that extends through the shoulder or reduced diameter area **218**. A second portion **240** of drill guide **202** has a larger cross-sectional diameter than first portion **238** and is sized and configured to be received within aperture **206** of tibial drill guide mount **200**. A flat **242**, which is best seen in FIGS. **21** and **23**, is formed along an exterior surface **244** of first portion **238** of drill guide **202**. The internal surface **248** of second portion **240** of tibial drill guide **202** has a conical shape that intersects and communicates with aperture **246** such that a drill or reamer may be received through drill guide **202**.

As with the digital image models **50** disclosed above, and considering a generalized digital model of a tibial resection guide mount **100** added to the patient's lower tibia image data, the anatomic surface features of the patient's lower tibia, e.g., the surface topography, may be complementarily mapped onto each of conformal bone engaging surfaces **116** of arms **110**, **112**, and central post **114**, i.e., the surfaces that will engage the bones unique surface topography, of tibial resection guide mount **100**. It will be understood that complementary mapping of the digital images results in localized prominences on the surface of a bone becoming localized concavities on conformal bone engaging surfaces **116** of arms **110**, **112**, and central post **114** of tibial resection guide mount **100**, while localized concavities on the surface of a bone become localized prominences on conformal bone engaging surfaces **116** of arms **110**, **112**, and central post **114**.

Each of conformal bone engaging surfaces **116** of arms **110**, **112**, and central post **114** of resection guide mount **100** is redefined with a complementary, substantially mirror image of the anatomic surface features of a selected region of the patient's lower tibia **16***a*. As a consequence of this complementary bone surface mapping, tibial resection guide mount **100** releasably "locks" on to the complementary topography of the corresponding portion of the patient's natural tibia without the need for other external or internal guidance fixtures. In other words, the mating of bone surface asperities in their corresponding concavities formed in con-

formal bone engaging surfaces **116** of tibial resection guide mount **100** ensures that little or no relative movement, e.g., slipping sideways, occurs between tibial resection guide mount **100** and the tibial surface.

A substantially identical mapping is carried out in connection with the design of a patient specific talar resection guide mount **102** and tibial drill guide mount **200**. Notably, the mapping for the design of tibial drill guide mount **200** is performed by extrapolating where the resections to the tibia **16** and talus **14** will be made using tibial and talar resection guide mounts **100** and **102** and mapping the tibial drill guide mount **200** onto the extrapolated geometry of the tibia and talus.

A visual presentation of the virtual alignment results between the patient's lower tibia **16***a* and resection guide mount **100**, the patient's upper talus **14***a* and resection guide mount **102**, and the proposed resected area that that is to be created by resecting the talus **14** and tibia utilizing the tibial resection guide mount **100** and the talar resection guide mount **102** are created and forwarded to the surgeon to obtain approval of the results prior to manufacturing. Additionally, the surgeon may be provided with a visual representation of the virtual alignment results between the proposed resected joint space and tibial drill guide mount **200** are created and forwarded to the surgeon to obtain approval of the results prior to manufacturing. Upon receipt of the surgeon's approval, resection guide mount **100**, resection guide mount **102**, and tibial drill guide mount **200** are manufactured and returned to the surgeon for use in the surgery.

During a total ankle replacement, for example, the surgeon makes an anterior incision to gain initial access to the ankle joint. The surgeon orients tibia resection guide mount **100** on lower tibia **16***a* until the conformal bone engaging surfaces **116** of arms **110**, **112** and central post **114** of tibial resection guide mount **100** securely engage one another so as to releasably "interlock" with the topography of the exposed surface of lower tibia **16***a* as best seen in FIGS. **5-7**. With tibial resection guide mount **100** locked onto the patient's lower tibia **16***a*, a surgeon press-fits an appropriately configured distal resection guide **132** in guide receptacle recess **108** of tibial resection guide mount **100**. This results in the resection guide mount **100** being sandwiched between the resection guide **132** and the patient's bone tibia **16***a* (FIGS. **5** and **6**). With the resection guide mount **100** accurately positioned with respect to the selected bone region and resection guide mount **100** construct appropriately secured to the patient's bone by virtue of the mating of bone surface asperities in their corresponding concavities formed in conformal bone engaging surfaces **116**, the surgeon uses a conventional surgical blade **60** and the resection slots **128** and **130** of resection guide **132** to resect the patient's bone **16** (FIGS. **7** and **8**).

In a similar fashion, when talar resection guide mount **102** is added to the patient's talar image data, the anatomic surface features of the patient's upper talus, e.g., the surface topography, may be complementarily mapped onto conformal bone engaging surface **144**. It will again be understood that complementary mapping of the digital images results in localized prominences on the surface of a bone becoming localized concavities on conformal bone engaging surface **144**, while localized concavities on the surface of a bone become localized prominences on conformal bone engaging surface **144**. In this way, conformal bone engaging surface **144** is redefined with a complementary, substantially mirror image of the anatomic surface features of a selected region of the patient's lower tibia. As a consequence of this complementary bone surface mapping, talar resection guide mount **102** releasably "locks" on to the complementary topography of the corresponding portion of the patient's natural talus without the need for other external or internal guidance fixtures.

To continue the total ankle replacement the surgeon orients resection guide mount **102** on upper talus **14***a* until conformal bone engaging surface **144** of resection guide mount **102** "locks" to the topography of the exposed surface of upper talus **14***a* (FIG. **11**). With resection guide mount **102** locked onto the patient's upper talus, a surgeon press-fits an appropriately configured distal resection guide **166** in guide receptacle recess **146** of talar resection guide mount **102**. This results in resection guide mount **102** being sandwiched between resection guide **166** and the patient's bone **14** (FIGS. **12** and **13**). With the resection guide mount **102** accurately positioned with respect to the selected bone region and resection guide **166** and guide mount **102** appropriately constructed and secured to the patient's bone, by virtue of the mating of bone surface asperities in their corresponding concavities formed in conformal bone engaging surfaces **144**, the surgeon uses a conventional surgical blade **60** and the resection slot **164** of resection guide **166** to resect the patient's bone **14** (FIGS. **13** and **14**).

Once the tibia **16** and talus **14** have been resected, tibial drill guide mount **200** and tibial drill guide **202** are coupled together and installed into resected joint space **22** (FIG. **15**). Tibial drill guide mount **200** and tibial drill guide **202** are coupled together by inserting first portion **238** of tibial drill guide **202** into aperture **206** defined by body **204** of tibial drill guide mount **200** (FIG. **24**). Flat **242** formed on the first portion **238** of tibial drill guide **202** is aligned with anti-rotation feature **220** of shoulder **218** such that tibial drill guide **202** slides into aperture **206** until a lower surface **250** of second portion **240** of drill guide **202** contacts and abuts shoulder **218** of tibial drill guide mount **200**.

Body **204** of tibial drill guide mount **200**, in which tibial drill guide **202** is disposed, is inserted into resected joint space **22** in an anterior posterior direction with chamfers **212** sliding along resected areas of tibia **16** formed by utilizing slots **140** of tibial resection guide **132** as best seen in FIGS. **25**A and **25**B. The assemblage of tibial drill guide mount **200** and tibial drill guide **202** are slid into resected joint space **22** until talar engagement structure contacts talus **14**. A surgeon may move tibial guide mount **200** within resected joint space until conformal surface **228** is appropriately secured to the patient's bone by virtue of the mating of bone surface asperities in their corresponding concavities formed in conformal bone engaging surface **228**. Once properly located, k-wires **62** may be inserted into holes **230** and/or holes **236**, respectively defined by tibial engagement structure **222** and talar engagement structure **224**, to secure the assemblage of the tibial drill guide mount **200** and tibial drill guide **202** to the patient's tibia **16** and talus **14** as illustrated in FIG. **25**C.

With tibial drill guide mount **200** and tibial drill guide **202** secured within resected joint space **22**, the patient's leg is inserted into a foot holder and alignment tool **300**. FIGS. **26-28**B illustrate one example of an alignment tool **300**, which serves the task of supporting the ankle joint during a prosthesis installation procedure. Alignment tool **300** includes a foot holder assembly **302** and a leg rest **304**. Foot holder assembly **302** includes a foot rest **306**, to which the foot is secured by a foot clamp **310** and heel clamps **308** during an prosthesis installation procedure. The calf of the leg is suitably secured to the leg rest **304** once the ankle joint has been resected and tibial drill guide mount **200** and tibial drill guide **200** have been installed. Together, foot holder

assembly **302** and leg rest **304** hold the foot and ankle relative to the leg during an installation procedure.

As shown in FIG. **26**, foot holder assembly **302** is sized and configured for pivoting, under control of the physician, from a vertical or upright condition (shown in solid lines in FIG. **26**) toward a more horizontal or tilted condition (shown in phantom lines in FIG. **26**). In the upright condition, assembly **302** serves to hold the ankle joint in a desired orientation with respect to the natural anterior-to-posterior and medial-to-lateral axes.

As best seen in FIG. **27**, foot holder assembly **302** includes a back plate **312** and a mid-plate **314**, which is sandwiched between foot rest **306** and back plate **312**. Mid-plate **314** is coupled to the foot rest **306** by sliding dovetail couplings **316** for up-and-down (i.e., vertical) movement relative to foot rest **306**. A pair of oppositely spaced alignment rods **318** is carried by the mid-plate **314**.

Alignment rods **318** are disposed in the same horizontal plane and extend from mid-plate **314** through vertically elongated slots **320** defined by foot rest **306** such that rods **318** are disposed on opposite sides of the tibia in the medial-to-lateral plane when a foot is supported by foot holder assembly **302**. Vertical movement of mid-plate **314** moves alignment rods **318** up-and-down in unison within slots **320** on opposite sides of the foot rest **306** (FIG. **28**A).

Back plate **312** is coupled to mid-plate **314** by sliding dovetail couplings **322** for side-to-side (i.e., horizontal) movement relative to foot rest **306** as illustrated in FIG. **28**B. Back plate **312** also carries a bushing **324**, which extends through openings **326** defined by mid-plate **314** and foot rest **306** and terminates at or near the plane of the foot rest **306** against which the bottom of the foot contacts. The center of the bushing **324** coincides with the intersection of the horizontal plane of the rods **318**.

An adapter bar **400** for coupling tibial drill guide mount **200** to alignment tool **300** is illustrated in FIG. **29**. Adapter bar **400** includes an elongate body **402** linearly extending from a first end **404** to a second end **406**. Each of the ends **404**, **406** includes a respective extension **408**, **410** that extends from elongate body **402** at an angle. In some embodiments, extensions **408** and **410** orthogonally extend from elongate body **402**, although one skilled in the art will understand that extensions **408** and **410** may diverge from elongate body **402** at other angles. In some embodiments, elongate body **402** may not have a linear shape, but may have a curved or arced shape as will be understood by one skilled in the art.

Each extension **408** and **410** defines a respective hole **412**, **414** that is sized and configured to slidably receive alignment rods **318** that extend from alignment tool **300**. Elongate body **402** defines one or more holes **416-1**, **416-2**, and **416-3** (collectively referred to as "holes **416**") for coupling to adapter bar **400** to tibial drill guide mount **200**. In some embodiments, the one or more holes **416** align with one or more holes **216** defined by body **204** of tibial drill guide mount **200** such that a pin or other device for maintaining the alignment and engagement of adapter bar **400** and tibial drill guide mount **200**. For example, holes **216-1** and **216-2** of tibial drill guide mount **200** align with holes **416-1** and **416-2** of adapter bar **400**, and hole **216-3** of drill guide mount **200** aligns with hole **416-3** of adapter bar **400**. Dowel pins **70** (shown in FIG. **25**C) may be inserted into holes **216-1** and **416-1** as well as into holes **216-2** and **416-2** to align tibial drill guide mount **200** with adapter bar **400** in both the horizontal and vertical directions (e.g., in the x- and y-directions), and a screw (not shown) may be inserted through hole **416-3** into threaded hole **216-3** to secure tibial drill guide mount **200** to adapter bar at the proper height or depth (e.g., in the z-direction).

With tibial drill guide mount **200** and tibial drill guide **202** disposed within the resected ankle space **22**, the foot and lower leg are placed in foot rest **306** and leg rest **304** (FIG. **30**). The physician estimates the ankle's axis of dorsi-plantar rotation and visually aligns the ankle to the axis of rotation of the alignment tool **300**. Foot rest **306** is adjusted to rotate the foot so that the big toe is essentially pointing in a vertical direction with respect to the leg that extends in a horizontal direction. The forefoot and heel are secured to foot rest **306** with clamps **308** and **310**. Leg rest **304** is adjusted to the calf so that the tibia **16** is approximately parallel to the floor. The foot and calf are desirably aligned so that the anterior-posterior ("A-P") line of the talus's trochlea is essentially vertical.

Adapter bar **400** is coupled to alignment tool **300** by aligning holes **412** and **414** that are respectively defined by extensions **408** and **410** with alignment rods **318** of alignment tool **300**. Adapter bar **400** is then slid along alignment rods **318** until holes **416** of adapter bar align with holes **216** defined by body **204** of tibial drill guide **200** (FIG. **30**). As described above, dowel pins **70** are inserted into holes **416-1** and **416-2** of adapter bar **400** and holes **216-1** and **216-2** of tibial drill guide mount **200**. With dowels **70** disposed within holes **216-1**, **216-2**, **416-1**, and **416-2**, tibial drill guide mount **200** is properly aligned with alignment tool **300** in the medial lateral (e.g., x-direction) and superior-inferior (e.g., y-direction) directions. A screw is inserted through hole **416-3** into threaded hole **216-3**, which secures tibial drill guide mount **200** to adapter bar **400** and provides proper alignment in the anterior-posterior direction (e.g., the z-direction).

With the patient's foot disposed within alignment tool **300**, bushing **324** on back plate **312** establishes alignment with the mechanical axis of tibia **16** and alignment of rods **318**. Thus, after using adapter bar **400** to align tibial drill guide mount **200** with alignment tool **300** as described above, in line drilling of the center of the ankle and tibia for introduction of a bottom foot cannula is made possible without the use of fluoroscopy since aperture **246** of tibial drill guide **202** disposed within tibial drill guide mount **200** is aligned with an axis defined by bushing **324**. Such arrangement enables an intramedullary channel to be formed that is substantially collinear with a mechanical axis defined by the tibia.

Various minimally invasive surgical techniques may be used to introduce a bottom foot cannula into the calcaneus **20**, talus **14**, and tibia **16**. In one representative embodiment, bushing **324** is temporarily separated from the back plate **312** (e.g., by unscrewing) to provide access to the bottom of the foot. The physician uses a scalpel to make an initial incision in the bottom of the foot and replaces bushing **324**. A cannulated trocar loaded with a k-wire (not shown) can be inserted through bushing **324**, into the bottom of the foot, until the calcaneus **20** is contacted and the k-wire is firmly set within the calcaneus **20**. The trocar can then be removed, and the k-wire lightly tapped further into the calcaneus **20**. In a representative embodiment, the bushing **324** measures 6 mm in diameter, and the cannulated trocar can be 6 mm loaded with a 2.4 mm k-wire. The physician can now operate a cannulated first reamer (e.g., 6 mm) (not shown) over the k-wire up into the calcaneus **20** and talus **14**. The first reamer opens an access path for insertion of a bottom foot cannula.

After withdrawing the first reamer and bushing **324**, the physician then inserts a bottom foot cannula **64** as shown in

FIG. **30**. With the bottom foot cannula **64** in place, a second reamer **66** (e.g., 5 mm) can be operated through the cannula **64** to drill approximately another 100 mm through the talus **14** and up into the tibia **16** to establish an intramedullary guide path through the calcaneus **20** and talus **14** leading into the tibia **16** (FIG. **30**). As second reamer **66** is advanced towards tibia **16**, the tip **68** of reamer **66** is guided by the conical interior surface **248** of tibial drill guide **204**, which is aligned with bushing **324** of alignment tool **300**.

Once an intramedullary channel through the calcaneus **20**, talus **14**, and tibia **16** has been established, adapter bar **400** is decoupled from drill guide mount **200** and alignment rods **318**. Drill guide mount **200** is removed from resected joint space **22** to expose the resected joint space to the surgeon.

With the resected ankle joint space **22** exposed to the surgeon, an ankle prosthesis is then installed. In one example, the ankle prosthesis includes a stem that may extend from the bottom of the calcaneus up to the top of the talus (i.e., a talo-calcaneal stem), although in some embodiment the stem is completely disposed within the talus (i.e., a talar stem). A convex dome is coupled to the stem and provides an articulating joint surface. A tibial stem may be monolithic or include a plurality of segments that may be coupled together in situ. A tibial platform couples to the tibial stem and either includes or is coupled to a convex joint surface for articulating with the articulating joint surface coupled to the talar/talo-calcaneal stem. Examples of such ankle prosthesis and methods of installing such prosthesis are disclosed in U.S. Pat. No. 7,534,246 issued to Reiley et al., the entirety of which is herein incorporated by reference.

The disclosed tibial drill guide mount **200** and drill guide **202** may be used with a variety of alternative alignment tools. For example, FIGS. **31-34** illustrate another example of an alignment tool in the form of a foot holder assembly **500** to which tibial drill guide mount **200** may be directly coupled. As shown in FIGS. **31** and **32**, foot holder assembly **500** includes a base plate **502** defining a plurality of slots **504** and **506** and an aperture **503**.

Slots **504** are sized and configured to slidably receive a pair of heel clamps **508**, and slots **506** are sized and configured to slidably receive a pair of forefoot clamps or guides **510**. Heel clamps **508** and forefoot clamps **510** cooperate to maintain a foot of a patient in a desired position with respect to base plate **502** by utilizing a locking mechanism such as, for example, a set screw or other locking device, to fix the position of heel clamps **508** and forefoot clamps **510** to base plate **502**. The respective foot engaging surfaces **512** and **514** of heel clamps **508** and forefoot clamps **510** may have a shape that complements the medial and lateral shape of a human foot.

Extending from base plate **502** are a pair of alignment rods **516** that are arranged on base plate **502** such that one alignment rod is disposed on a medial side of a patient's foot and the other alignment rod is disposed on a lateral side of a patient's foot. A coupling bar **518** is sized and configured to slidably engage alignment rods **516** as best seen in FIGS. **32** and **34**. Coupling bar **518** includes a pair of spaced apart legs **520** that define channels **522** (FIG. **32**) in which alignment rods **516** are slidably received. One or both of legs **520** include a clamp or other locking mechanism **524** for increasing the friction between coupling bar **518** and alignment rods **516** in order to releasably lock coupling bar **518** at a certain position along the length of alignment rods **516**.

Medial-lateral cross bar **526** couples together legs **520** of coupling bar **518**. Extending from medial-lateral cross bar **526** is mount coupling member **528**. Mount coupling member **528** includes one or more holes **530-1**, **530-2**, and **530-3** (collectively referred to as "holes **530**") that are sized and configured to align with holes **216** defined by tibial drill guide mount **200**.

A peg **532** (FIG. **33**) extends from medial-lateral cross bar **526** for coupling shin engaging member **534** via slot **536** defined by shin engaging member **534**. Shin engaging member **534** includes a shelf **538** having a concave surface **540** for abutting a shin of a patient. A nut or other locking mechanism (not shown) for engaging peg **532**, which may be threaded, may be used to fix the position of shelf **538** relative to medial-lateral cross bar **526**.

The use of foot holder assembly **500** in connection with the assemblage of tibial drill guide mount **200** and tibial drill guide **202** is similar to the use of alignment tool **300** described above. For example, once the assembly of tibial drill guide mount **200** and tibial drill guide **202** are disposed within resected joint space **22**, the heel of the patient's foot is placed between heel clamps **508** and the patient's forefoot is placed between forefoot clamps **510**. The locking mechanisms of heel and forefoot clamps **508** and **510** may be engaged to initially set positions of heel and forefoot clamps **508** and **510** relative to base plate **502**.

Holes **530** of coupling member **528** are aligned with holes **216** defined by tibial drill guide mount **200** by sliding legs **520** of coupling bar **518** along alignment rods **516**. Dowel pins **70** and/or a threaded screw (not shown) may be used to couple holes **530** of coupling member **528** to holes **216** of tibial drill guide mount **200**. The surgeon may check to ensure that the patient's foot is firmly against base plate **502** and then engage clamps **524** such that coupling bar **518** is fixed to alignment rods **516**.

Shin engaging member **534** is adjusted until concave surface **540** contacts the patient's shin. The adjustment of shin engaging member **534** is guided by the engagement between slot **536** and peg **532**. With shin engaging member **534** in the desired position, the nut or other locking mechanism (not shown) locks shin engagement member **534** in place. The surgeon may make final adjustments to the heel and forefoot clamps **508** and **510** and then create the intramedullary channel as described above.

Another example of an alignment tool **600** for use with tibial drill guide mount **200** and tibial drill guide **202** is illustrated in FIGS. **35-38**. As shown in FIG. **35**, alignment tool **600** includes a base plate **602** comprising a plurality of bars **602***a*, **602***b*, and **602***c*. Although three bars **602***a*, **602***b*, and **602***c* are illustrated, one skilled in the art will understand that fewer or more bars may be implemented. Bar **602***b* defines a hole **603** sized and configured to receive a surgical tool, such as, for example, a cannulated drill. Additional elements including, but not limited to, heel clamps and/or forefoot clamps (not shown) may be coupled to the bars **602***a*, **602***b*, and **602***c* of base plate **602** for aiding in the positioning of a patient's foot with respect to hole **603**.

Extending from base plate **602** is a pair of spaced apart alignment rods **604**. One of alignment rods **604** may be disposed on a medial side of a patient's leg, and the other alignment rod **604** disposed on a lateral side of the patient's leg. Alignment rods **604**, like alignment rods **318** of alignment tool **300**, may be slidably receiving within holes **412**, **414** of adapter bar **400**.

The use of alignment tool **600** in connection with the assemblage of tibial drill guide mount **200** and tibial drill guide **202** and the adapter bar **400** is similar to the use of alignment tool **300** described above. For example, once the assembly of tibial drill guide mount **200** and tibial drill guide **202** are disposed within resected joint space **22**, adapter bar **400** is coupled to alignment tool **600** by aligning holes **412**

and **414** that are respectively defined by extensions **408** and **410** with alignment rods **604** of alignment tool **600**. Adapter bar **400** is slid along alignment rods **604** until holes **416** of adapter bar align with holes **216** defined by body **204** of tibial drill guide **200**. As described above, dowel pins are inserted into holes **416-1** and **416-2** of adapter bar **400** and **216-1** and **216-2** of tibial drill guide mount **200**. With dowels disposed within holes **216-1**, **216-2**, **416-1**, and **416-2**, tibial drill guide mount **200** is properly aligned with alignment tool **600** in the medial lateral (e.g., x-direction) and superior-inferior (e.g., y-direction) directions. A screw is inserted through hole **416-3** into threaded hole **216-3**, which secures tibial drill guide mount **200** to adapter bar **400** and provides proper alignment in the anterior-posterior direction (e.g., the z-direction). The surgeon may make final adjustments to the heel and forefoot clamps **508** and **510** and then create the intramedullary channel as described above.

FIGS. **39-63** illustrate another embodiment of a system for performing a surgical procedure. Specifically, FIGS. **39-43** illustrate a tibial drill guide mount **700** sized and configured to receive the tibial drill guide cartridge **702** illustrated in FIGS. **44-47**. Tibial drill guide mount **700** may also receive other drill guide cartridges for use during other stages of the surgical procedures. Like tibial drill guide mount **200**, tibial drill guide **700** may be fabricated from a resilient polymer material of the type that is suitable for use in connection with stereo lithography, selective laser sintering, or the like manufacturing equipment, e.g., a polyamide powder repaid prototype material is suitable for use in connection with selective laser sintering.

As shown in FIG. **39-43**, tibial drill guide mount **700** has a somewhat rectangular body **704** having a front side **706**, a rear side **708**, top side **710**, bottom side **712**, and a pair of opposed sides **714** and **716**. Front side **706** defines a recess **718** sized and configured to slidably receive tibial drill guide **702** therein. Recess **718** communicates with a recess **720** (FIGS. **39** and **43**) defined by bottom side **712** and a recess **722** (FIGS. **39**, **42**, and **43**) defined by top side **710** such that body **704** is substantially hollow.

The respective inner surfaces **724**, **726** of sides **714**, **716** have different geometries that correspond with the cross-sectional geometry of tibial drill guide cartridge **702** to ensure that tibial drill guide cartridge **702** is properly inserted into recess **718**. In the embodiment illustrated in FIGS. **39-43**, side **716** includes first and second ledges **728**, **730** that inwardly extend into recess **718**, and side **714** has an inwardly tapered upper region **732** and an inwardly extending ledge **734**. One skilled in the art will understand that sides **714**, **716** may include other features for ensuring proper insertion of tibial drill cartridge **702** into recess **718**. In some embodiments, sides **714**, **716** may have the identical geometry and tibial drill guide cartridge may be reversibly inserted into recess **718**.

Front side **706** defines one or more dowel holes **736-1**, **736-2** (collectively referred to as "dowel holes **736**") sized and configured to receive a dowel pin **70** therein. One or more through holes **738-1**, **738-2**, **738-3** (collectively referred to as "through holes **738**") extend through front side **706**, which also defines a blind hole **740**. Through holes **738** are sized and configured to receive k-wires for pinning tibial drill guide mount to a patient's bone as described below.

Top side **710** of tibial drill guide mount **700** includes a pair of chamfers **742** that are sized and configured to be mate against and reference the resected surfaces of the lower tibia **16***a* (FIG. **8**). Tibial drill guide mount **700** also includes a tibial engagement structure **744** and a talar engagement structure **746**. Tibial engagement structure **744** extends from top side **710** and includes a substantially conformal engagement surface **748**. Talar engagement structure **746** extends from bottom side **712** and also includes a substantially conformal engagement surface **750**.

Tibial drill guide cartridge **702** has a substantially rectangular elongate body **754** that may be formed from a more substantial material than tibial drill guide mount **700** such as, for example, metals, ceramics, or the like. As best seen in FIGS. **44** and **45**, the geometry of sides **756**, **758** is respectively complementary to the sides **714**, **716** of tibial drill guide mount **700**. For example, side **758** includes ledges **760** and **762** that respectively correspond to ledges **728** and **730**, and side **756** includes a ledge **764** and an angled section **766**, which respectively correspond to ledge **734** and upper region **732** of tibial drill guide mount **700**.

Front side **768** of tibial drill guide cartridge **702** defines a blind hole **770**, which may be threaded for reasons described below. Tibial drill guide cartridge **702** defines a pair of holes **772** and **774** that extend from bottom surface **776** to top surface **778**. Hole **772** may be a reamed hole that is sized and configured to receive a ball detent therein, and hole **774** has an internal surface **780** that tapers from a larger diameter at bottom surface **776** to a smaller surface that is sized and configured to receive a surgical tool, such as a drill and/or reamer. Top surface **778** defines a pair of parallel slots **782-1**, **782-2** (collectively referred to as "slots **782**") that extend from side **756** to side **758**. As best seen in FIGS. **44** and **47**, slots **782** are disposed equidistant from a central axis defined by hole **774** to provide a visual key for a physician that wants check the alignment of hole **774** with a mechanical axis of a patient's tibia using fluoroscopy.

As illustrated in FIGS. **48**, a mounting plate **800** has a substantially rectangular body **802** that is fabricated from a material including, but not limited to, metals, ceramics, or the like. Body **802** defines an aperture **804** the extends from front side **806** to back side **808** and has a similar geometry of recess **718** of tibial drill guide mount **700** such that tibial drill guide cartridge **702** may be received therein. Body **802** also defines a pair of through holes **810-1**, **810-2** (collectively referred to as "holes **810**") that are arranged on body **802** such that they correspond to holes **738** of tibial drill guide mount **700** and are sized and configured to receive a k-wire or pin therein.

A mounting base **812** extends from front side **806** of mounting plate **800** and defines a hole **814** that extends from a first side **816** to a second side **818**. Mounting base **812** defines a notch **820** and one or more dowel pin holes **822-1**, **822-2** (collectively referred to as "holes **822**") that are aligned with holes **736** of tibial drill guide mount **700**. Notch **820** bisects hole **814**. Mounting base **812** may also define one or more recesses **824** that correspond to one or more protrusions **784** that extends from front side **706** of tibial drill guide mount **700**. Recesses **824** and protrusions **784** cooperate to ensure that mounting base **812** and tibial drill guide mount **700** are properly aligned. One skilled in the art will understand that other geometric features may be implemented to ensure proper alignment between mounting base **812** and tibial drill guide mount **700**.

As illustrated in FIGS. **49-54**, mounting plate **800** may be coupled to tibial drill guide mount **700** using dowel pins **70**, which are received through holes **822** and **734**. Tibial drill guide cartridge **702** is received through aperture **804** and recess **718** as best seen in FIG. **51**. FIGS. **53** and **54** illustrate that when tibial drill guide cartridge **702** is properly inserted into the assemblage of tibial drill guide mount **700** and mounting plate **800**, hole **772** aligns with hole **828** defined by mounting plate **800**, which may include a ball detent (not

shown) disposed therein. Consequently, the ball detent is received within hole **772** to retain tibial drill guide cartridge **702** disposed within aperture **804** and recess **718** such that hole **774** is disposed within recesses **754** and **756**. A screw or other threaded object (not shown) can be inserted into threaded hole **770** and then pulled to remove tibial drill guide cartridge **702** from aperture **804** and recess **718** as illustrated in FIGS. **53** and **54**.

Tibial drill guide mount **700**, tibial drill guide **702**, and mounting plate **800** may be used in connection with alignment tool **300**, adapter bar **400**, foot holder assembly **500**, and alignment tool **600** as described above. Additionally, tibial drill guide mount **700**, tibial drill guide **702**, and mounting plate **800** may also be used in conjunction with foot holder assembly **900** illustrated in FIGS. **55-60** as can tibial drill guide mount **200** and tibial drill guide **202**.

As shown in FIG. **55**, foot holder assembly **900** includes a base plate **902** that extends from a first end **904** to a second end **906**. First and second ends **904**, **906** each define a pocket **908** and a hole **910**. Pocket **908** is sized and configured to receive a drill bushing **912** having a cylindrical body defining hole **914** that aligns with through hole **910**. Accordingly, both first end **904** and second end **906** may support an ankle or forefoot of a patient. Each pocket **908** includes a spring loaded detent **916** communicatively coupled to it that include a finger receiving surface **918** and is configured to slide relative to base plate **902** and secure drill bushing **912** within pocket **908**. In some embodiments, drill bushing may be threaded and configured to be coupled to base plate **902** with complementary threads disposed on an inner surface of holes **910**.

Base plate **902** also includes a medial/lateral extension **920** that extends in a substantially perpendicular direction from an approximate mid-point between first end **904** and second end **906**. Base plate **902** may also define a viewing opening **922** such that a surgeon may be able to view the bottom of a patient's foot when the foot is secured to foot holder assembly **900**.

One or more rods **924** extend from base plate **902** in a substantially perpendicular direction with respect to an upper foot holding surface **926** (FIG. **56**). Rods **924** may be secured to base plate **902** using screws or through other securing means as will be understood by one skilled in the art. A cap **928** is secured to an upper end of rods **924** and be secured to rods **924** using screws or other fixation means.

A mounting member **930** has an elongate body **932** that defines a pair of holes **934**, **936** at one end **938** that slidably receive rods **924** such that mounting member **930** may be slid along rods **924** in order to position tibial drill guide mount **700** with respect to base plate **902**. A spring loaded button **940** is disposed at first end **938** of mounting member **930** and is coupled to a locking mechanism (not shown) disposed within mounting member **930** for locking mounting member **930** at a position along rods **924**.

One or more holes **942** are defined at the second end **944** of mounting member **930** and correspond to holes **716** of drill guide mount **700** for coupling drill guide mount **700** to foot holder assembly **900**. Second end **942** also defines a slot **946**, as best seen in FIGS. **56** and **60**, that is sized and configured to receive an internally threaded rod **948** of a pivoting arrangement **950**, which includes a lower portion **952** that is received within slot **820** of mounting plate **800** and is cross-pinned through hole **814**. The cross-pinning of pivoting arrangement **950** may pivot about an axis defined by hole **814** and is configured to receive an support tightening knob **954**. Bottom surface **956** (FIG. **60**) of knob **954** has an outer dimension that is greater than slot **946** and is configured to engage mounting member **930** in order to secure the assemblage of mounting plate **800** and tibial drill guide mount **700**, which may include tibial drill cartridge **702**.

In operation, tibial drill guide mount **700** is inserted into resected joint space **22**. Mounting plate **800** is connected to tibial drill guide mount **700** using dowel pins **70** as best seen in FIGS. **49** and **50**. With pivoting arrangement **950** cross-pinned to mounting plate **800**, the assemblage of mounting plate **800** and pivoting arrangement **948** is coupled to tibial drill guide mount with dowel pins **70**, which may be press fit into holes **822** of mounting plate **800** and holes **716** of tibial drill guide mount **700** as will be understood by one skilled in the art. Tibial drill guide mount **700** and mounting plate may be secured within resected joint space **22** by inserting k-wires (not shown) into holes **736**, **790** defined by tibial drill guide mount **700** and holes **830-1**, **830-2** (corresponding to holes **736-1**, **736-2**) and **832-1**, **832-2** defined by mounting plate **800**.

With mounting plate **800** coupled to tibial drill guide mount **700** that is disposed within resected joint space **22**, pivoting arrangement **948** is rotated such that it extends in a direction approximately parallel to a longitudinal axis defined by a patient's leg and the cartridge-style tibial drill guide **702** is inserted into aperture **804** of mounting plate **800** and recess **718** of tibial drill guide mount **700**. Tibial drill guide cartridge **702** is inserted until leading end **786** of tibial drill cartridge **702** abuts rear wall **788** of tibial drill guide mount **700** at which point the ball detent disposed within hole **772** engages hole **828** defined by mounting plate **800** and the front side **768** of tibial drill guide cartridge **702** is flush with front side **806** of mounting plate **800**.

Holes **940** of mounting member **930** are aligned with, and received over, dowel pins **70** that extend from front side **806** of mounting plate to couple mounting member **930** of foot holder assembly **900** to the assemblage of mounting plate **800**, tibial drill guide mount **700**, and tibial drill guide cartridge **702**. With mounting member **903** coupled to dowel pins **70** and mounting plate **800**, pivoting arrangement **948** is rotated with respect to mounting plate **800** such that rod **946** of pivoting arrangement **948** is received within slot **944** of mounting member **930**. Knob **952** is then rotated about its axis (clockwise or counterclockwise) such that the bottom surface **954** of knob **952** contacts mounting member **930** to maintain engagement between mounting member **930** and the assemblage of tibial drill guide mount **700** and mounting plate **800**.

Drill bushing **912** is coupled to hole **910** that is aligned with the heel of a patient's foot. As described above, drill bushing **912** may be slid into pocket **908** defined by bottom plate **902** until spring loaded detents **916** releasably lock drill bushing **912** in place. In some embodiments, drill bushing **912** may be screwed into base plate **902** by way of corresponding threads disposed on an outer surface of drill bushing **912** that engage threads defined by an inner surface of pocket **908** and/or hole **910**. With drill bushing **912** in place and the patient's leg secured to foot holder assembly **900**, various minimally invasive surgical techniques may be used to introduce a bottom foot cannula into the calcaneus **20**, talus **14**, and tibia **16** as described above.

Once access to the patent's calcaneus has been achieved, a bottom foot cannula **64** is inserted through the patient's calcaneus **20**. A reamer **66** is operated through the cannula **64** to drill approximately another through the talus **14** and up into the tibia **16** to establish an intramedullary guide path through the calcaneus **20** and talus **14** leading into the tibia **16**. As reamer **66** exits talus **14**, the conically shaped internal

surface **748** guides the tip **68** into hole **788**. An axis defined by hole **788** is substantially axially aligned with a mechanical axis of tibia **16** such that as reamer **66** is extended through hole **788**, it bores an intramedullary canal within tibia **16**.

Reamer Stabilizer

FIGS. **63-70** illustrate one example of a reamer stabilizer **1000** that may be used to stabilize the reamer as it is advanced into the tibia of a patient. Referring first to FIG. **63**, reamer stabilizer **1000** includes an elongate body **1002** extending from a distal end **1004** to a proximal end **1006**. As best seen in FIGS. **64** and **65**, body **1002** defines a longitudinal channel **1008** extending along the length of body **1002**. Body **1002** also defines a pair of cavities **1010**, **1012** for receiving buttons and biasing members as described in greater detail below.

Distal end **1004** of body **1002** includes a pair of spaced apart prongs **1014**, **1016**. In some embodiments, prong **1014** has a length that is longer than a length of prong **1016**. As shown in FIGS. **64** and **65**, longitudinal channel **1008** extends along prong **1016**. A notch **1018** is defined between prongs **1014** and **1016**.

Proximal end **1004** includes a handle **1020** that extends at from body **1002** at an angle relative to the longitudinal axis defined by body **1002** as best seen in FIG. **63**. Opposite handle **1020** proximal end **1006** includes a cutout region **1022** defined by a pair of perpendicular walls **1024**, **1024** as illustrated in FIG. **66**. Although walls **1024** are illustrated and described as perpendicular to one another, one of ordinary skill in the art will understand that cutout region **1022** may be defined by walls having other configurations.

In some embodiments, body **1002** has a rectangular cross-sectional geometry defined by four sides **1026**, **1028**, **1030**, **1032**. Opposed sides **1026**, **1028** each include a respective step **1034**, **1036** along their respective lengths. Steps **1034**, **1036** are positioned at a same distance from notch **1018**.

Opposed sides **1030**, **1032** defines holes **1038**, **1040**, **1042** each configured to receive a respective pin **1044**, **1046**, **1048** in a press-fit engagement as described below. Hole **1038** is positioned near proximal end **1006**. Hole **1040** is disposed adjacent to wall **1026** and step **1034**. Hole **1042** is formed in prong **1016**. In some embodiments, opposed sides **1030**, **1032** define an opening **1050**, which reduces the overall weight of reamer stabilizer **1000** and provides a surgeon or user with additional surfaces to manipulate reamer stabilizer **1000**.

As best seen in FIGS. **64** and **65**, a slidable guiding assembly **1052** is disposed within longitudinal channel **1008**. Guiding assembly **1052** includes a reamer guide body **1054** that is pivotably coupled to stabilizer body **1002** by pin **1048**, which is received within hole **1056**. Reamer guide body **1054** includes a concave guiding surface **1058** disposed adjacent to hole **1056**. Opposite concave guiding surface **1058** guide body **1054** includes a step **1060**, which is disposed adjacent to a hole **1062**, which is defined in a forked end **1064** of guide body **1054**. Formed end **1064** is formed by a pair of spaced apart tabs **1066**, **1068** that together define a recess **1070** therebetween.

A pin **1072** (FIGS. **66** and **67**) is received in hole **1062** of reamer guide body **1054** for pivotably coupling reamer guide body **1054** to pivot rod **1074**, which includes a corresponding hole **1076** at its distal end **1078**. Pivot rod **1074** defines another hole **1080** at its proximal end **1084**. Hole **1080** is sized and configured to receive a pin **1082** for coupling pivot rod **1074** to plunger rod **1086**.

As best seen in FIGS. **66-69**, plunger rod **1086** defines a hole **1088** at its distal end **1090**, which has a flared geometry relative to the remainder of plunger rod **1086**. In some embodiments, distal end **1090** includes a pair of opposed flats **1092**, **1094** and defines a slot **1096** as best seen in FIG. **69** in which pivot rod **1074** is received. Distal end **1090** also forms a shoulder **1091** configured to maintain plunger rod **1086** within longitudinal channel **1008** as described in greater detail below.

Proximal end **1098** of plunger rod **1086** defines a hole **1100** that is size and configured to receive a pin **1118** for coupling plunger rod **1086** to head **1102**. Head **1102** defines a blind hole **1104** that inwardly extend from distal end **1106** and is sized and configured to receive proximal end **1098** of plunger rod **1086** therein. In some embodiments, top side **1108** of head **1102** includes an angled surface **1110** that terminates at side **1112**. Head **1102** also includes an arced surface **1114** for providing an ergonomic contour to a user's finger (FIG. **70**). A hole **1116** extends through head **1102** in a direction that is perpendicular to the direction in which blind hole **1104** extends and is configured to align with hole **1100** of plunger rod **1086** for coupling plunger rod **1086** to head **1102** using pin **1118**. Although a cross-pin arrangement is described, one of ordinary skill in the art will understand that other coupling means may be used to couple head **1102** to plunger rod **1086** including, but not limited to, a taper fit, ultrasonic welding, a snap fit arrangement, or the use of adhesive to list but only a few possibilities.

A biasing member **1120** is configured to be disposed over plunger rod **1086** and abut the distal end **1106** of head **1102**. In some embodiments, biasing member **1120** is a compression spring that applies a biasing force to head **1102** in a proximal direction as biasing member **1120** is disposed between distal end **1106** and a reduced diameter area **1009** of longitudinal channel **1008**.

Turning now to FIG. **70**, locking assembly **1122** is disposed at the proximal end **1006** of reamer guide body **1002** and is configured to lock guiding assembly **1052** in a position in which guiding assembly **1052** engages a reamer body **65** as described in greater detail below. Locking assembly **1122** includes a locking button **1124** slidably coupled to reamer stabilizer body **1002**. Locking button **1124** includes a lower portion **1126** that is configured to be received within cavity **1022** defined by stabilizer body **1002** and an upper portion **1128** extending above stabilizer body **1002** for facilitating engagement by a surgeon or other user.

In some embodiments, lower portion **1126** has a substantially rectangular geometry comprising a bottom surface **1130**, an internal side surface **1132**, and an outer side surface **1134**. Bottom surface **1130** is flat and configured to slide along a surface of cavity **1010**. The interface between bottom surface **1130** and outer side surface **1134** includes an angled surface **1138** that is complementary to angled surface **1110** of head **1102**. A slot **1140** is defined by sides **1142**, **1144**. Slot **1140** extends parallel to bottom surface **1130** and is sized and configured to receive pin **1044**, which is received through hole **1038** defined by stabilizer body **1002**.

In some embodiments, upper portion **1128** has a triangular shape although one of ordinary skill in the art will understand that upper portion **1128** can take on other geometric shapes. Upper portion **1128** includes a substantially flat bottom surface **1146** configured to slide along an upper or proximal-most surface of handle **1020**. Upper sides **1148**, **1150** form the other two sides of upper portion **1128**. Side **1150** is curved to facilitate ergonomic engagement with a finger of a surgeon or user.

A biasing member **1152** is disposed within cavity **1010** and is configured to urge locking button **1124** away from handle **1020** and towards guiding assembly **1052**. In some embodiments, such as the embodiment illustrated in FIGS. **66-70**, biasing member **1152** is a compression spring that is disposed in cavity **1010** in an abutting relationship with inner side surface **1132** of lower portion **1126** of locking button **1124**. Biasing member **1152** is positioned such in cavity **1010** such that biasing member **1152** is substantially collinear with slot **1140** to prevent rotation and jamming of locking button **1124** as will be understood by one of ordinary skill in the art.

Coupling assembly **1154** is coupled to side **1026** of stabilizer body **1002** and is configured to couple reamer stabilizer **1000** to other surgical devices as described in greater detail below. Coupling assembly **1154** includes a pivoting button **1156** and a biasing member **1158**. As best seen in FIG. **66**, pivoting button **1156** has an arcuate body **1160** extending from a lower end **1162** to an upper end **1164**. A pair of ears **1166**, **1168** extend from an approximate middle of body **1160** that together define depression **1170**. Each ear **1166**, **1168** defines a respective hole **1172**, **1174** for receiving pin **1046**.

Lower end **1162** includes a detent **1176** extending from inner surface **1178** adjacent to depression **1170**. A recess **1180**, which is illustrated in FIGS. **64** and **65**, is defined within depression **1170** at a location that is disposed proximally of holes **1172**, **1174** defined by ears **1166**, **1168**. Detent **1176** is disposed distally of step **1034**. The relative locations of detent **1176** with respect to step **1034** and recess **1180** with respect to holes **1172**, **1174** are provided for coupling reamer stabilizer **1000** to other surgical device as described in greater detail below. Concave outer surface **1182** provides an ergonomic surface for the finger of a surgeon or user of reamer stabilizer **1000** when the reamer stabilizer **1000** is to be decoupled from other surgical devices.

To assemble reamer stabilizer **1000**, guiding assembly **1052** is assembled by placing pivot rod **1074** within slot **1096** at the distal end **1090** of plunger rod **1086**. Pivot rod **1074** is coupled to plunger rod **1088** by inserting pin **1082** through holes **1080** and **1100**. Reamer guide body **1054** is coupled to the distal end **1078** of pivot rod **1074** by inserting pin **1072** into holes **1062** and **1076**.

Proximal end **1098** of plunger rod **1086** is inserted into longitudinal channel **1008** at the opening at defined by **1016** at the distal end **1004** of stabilizer body **1002**. When shoulder **1091** defined by distal end **1090** contacts reduced diameter area **1009** of longitudinal channel **1008**, proximal end **1098** of plunger rod **1086** outwardly extends from longitudinal channel **1008**. Biasing member **1116** is inserted into longitudinal channel **1008** over plunger rod **1086** as is head **1102**. Hole **1116** of head **1102** is aligned with hole **1100** of plunger rod **1086** and the two pieces are coupled together by inserting pin **1118** through holes **1116** and **1100**. Reamer guide body **1054** is coupled to stabilizer body **1002** by inserting pin **1048** through holes **1042** and **1056**.

With guiding assembly **1052** coupled to stabilizer body **1002**, locking assembly **1122** is coupled to stabilizer body **1002**. Locking assembly **1122** is coupled to stabilizer body **1002** by inserting biasing member **1152** into cavity **1010** defined by body **1002**. Lower portion **1126** of locking button **1124** is inserted into cavity **1010** until slot **1140** defined by lower portion **1126** aligns with hole **1038** defined by body **1002**. With slot **1140** aligned with hole **1038**, pin **1044** is inserted into hole **1038** and slot **1140** to cross-pin locking button **1124** to body **1002**.

Coupling assembly **1154** is installed by inserting biasing member **1158** into cavity **1012**, and pivoting button **1156** is placed over biasing member **1158** such that holes **1172**, **1174** defined by ears **1166**, **1168** aligns with hole **1040** defined by body **1002**. With holes **1166**, **1168** aligned with hole **1040**, pin **1046** is inserted into the holes **1166**, **1168**, and **1040** to secure pivoting button **1156** to body **1002**.

Foot Holder Assembly

Reamer stabilizer **1000** is configured to be used in connection with a foot holder assembly such as foot holder assembly **1200** illustrated in FIG. **71**. Foot holder assembly **1200** includes a base plate **1202** having a generally rectangular shape extending from a first side **1204** to a second side **1206** an from a third side **1208** to a fourth side **1210**.

A pair of biased detents **1212**, **1214** are disposed at opposite ends of side **1210** and are configured to couple foot plate **1326** and drill guide assembly **1260** to one of sides **1204**, **1206** of base plate **1202** as described in greater detail below. Foot plate **1326** and drill guide assembly **1260** can advantageously be coupled to either of sides **1204**, **1206** such that foot holder assembly **1200** is reversible and can be used for an operation on a patient's left and/or right foot and ankle. Detents **1212**, **1214** each include a respective finger-engaging surface **1216**, **1218** that are manipulated by a surgeon or other user to disengage foot plate **1326** and/or drill guide assembly **1260** from base plate **1202**.

Sides **1204**, **1206** of base plate **1202** each define a pair of holes **1222**, **1224** that are sized and configured to receive pegs **1332**, **1334** of foot plate **1326** and pegs **1276**, **1278** of drill guide assembly **1260** as described in greater detail below. Sides **1204**, **1206**, **1208**, **1210** collectively define a viewing opening **1224** such that a surgeon may be able to view the bottom of a patient's foot when the foot is secured to foot holder assembly **1200**.

One or more rods **1226**, **1228** extend from side **1208** of base plate **1202** in a perpendicular direction with respect to the direction in which sides **1204** and **1206** extend from side **1208**. In some embodiments, rods **1226**, **1228** are secured to base plate **1202** using screws although one of ordinary skill in the art will understand that other securing means for securing rods **1226**, **1228** to base plate **1202** can be used. A cap **1230** is coupled to the ends of rods **1226**, **1228** opposite the ends to which base plate **1202** is coupled. Cap **1230** can also be coupled to rods **1226**, **1228** using screws or other securement means.

A mounting member **1232** having an elongate body **1234** that defines a pair of holes **1236**, **1238** at one end **1240** for slidably receiving rods **1226**, **1228**. A locking screw **1242** comprising a knob **1244** provides a locking mechanism for locking mounting member **1232** at a certain position along rods **1226**, **1228**. One or more holes **1246**, **1248** are defined at the second end **1250** of mounting member **1232** and correspond to holes **736** of drill guide mount **700** and holes **822** of modified mounting plate **800**A, which is described in greater detail below. Second end **1250** also defines a slot **1252** that is sized and configured to receive an internally threaded rod **948** of pivoting arrangement **950**.

Drill guide assembly **1260** is now described with reference to FIGS. **72-73**. Referring first to FIG. **72**, drill guide assembly **1260** includes a rectangular base **1262** extending from a coupling end **1264** to an opposite end **1266**. Sides **1268**, **1270** extend between ends **1264**, **1266** and each define a respective recess **1272**, **1274** adjacent to coupling end **1264**. Pegs **1276**, **1278** extend from coupling end **1264** and are sized and configured to be received within holes **1220**, **1222** defined by sides **1204**, **1206** of foot holder assembly

1200. Although two pegs 1276, 1278 are illustrated, one of ordinary skill in the art will understand that fewer or more pegs may be implemented.

Top side 1280 defines one or more holes 1282-1, 1282-2, 1282-3, 1282-4, 1282-5, 1282-6, 1282-7, 1282-8 ("holes 1282") for receiving k-wires. An opening 1284 is defined by top side 1280 and extends through base 1262 to patient-contact side 1286, which is disposed opposite top side 1280. Opening 1284 enables a surgeon or other professional to view the bottom of a patient's foot. A passageway 1288 also extends through base 1262 and is sized and configured to receive a locking bushing assembly 1290.

As best seen in FIG. 73, locking bushing assembly 1290 includes a central member 1292 that is coupled within passageway 1288. Central member 1292 includes a threaded flared region 1294 that is disposed adjacent to end 1296. A plurality of flexible prongs 1298 are disposed at end 1296 and have a tapered configuration that narrows from flared region 1294 to end 1296. Central member 1292 defines a bore 1300 extending from end 1296 to end 1302. Bore 1300 is sized and configured to receive a drill bushing as described in greater detail below.

A knob 1304 defines an internal space 1306 and a hole 1308 that aligns with bore 1300 of central member 1292. Inner surface 1310 adjacent to open end 1312 of knob 1304 includes threads for engaging the threads of threaded flared region 1294 of central member 1292. Opposite open end 1312, knob 1304 includes a plurality of outwardly extending gripping surfaces 1314 at end 1316. Internally, end 1316 includes a taper 1318. Side wall 1320 of knob 1304 defines one or more holes 1322 for receiving a respective pin 1324 for preventing knob 1304 from being separated from central member 1292.

Referring again to FIG. 71, foot plate 1326 has a rectangular base portion 1328 and a coupling portion 1330. Coupling portion 1330 includes a pair of pegs 1332, 1334 that are sized and configured to be received within holes 1222, 1223 defined by sides 1204, 1206 of base plate 1202. Sides 1336, 1338 each define a respective slot 1340, 1342 that are sized and configured to receive biased detents 1212, 1214 of base plate 1202 of foot holder assembly 1200.

Operation

The use of reamer stabilizer 1000, foot holder assembly 1200, drill guide assembly 1260, and foot plate 1326 is now described. As described above, a surgeon uses tibial resection guide mount 100 and tibial resection guide 132 to resect the inferior end of a patient's tibia 16 and uses talar resection guide mount 102 and talar resection guide 166 to resect the superior surface of a patient's talus 14 to create resected joint space 22 as illustrated in FIG. 15.

Tibial drill guide mount 700 is inserted into resected joint space 22, and mounting plate 800A is connected to tibial drill guide mount 700 using dowel pints in the same way mounting plate 800 is connected to tibial drill guide mount 700 as described above with reference to FIGS. 49 and 50. Cartridge-style tibial drill guide 702 is inserted into aperture 804 of mounting plate 800A and recess 718 of tibial drill guide mount 700. Tibial drill guide cartridge 702 is inserted until leading end 786 of tibial drill cartridge 702 abuts rear wall 788 of tibial drill guide mount 700 at which point the ball detent disposed within hole 772 engages hole 828 defined by mounting plate 800 and the front side 768 of tibial drill guide cartridge 702 is flush with front side 806 of mounting plate 800A, which is illustrated in FIG. 74.

Mounting member 1232 of foot holder assembly 1200 is coupled to tibial drill guide mount 700 and mounting plate 800A using dowel pins 70. For example, holes 1246, 1248 defined by second end 1250 are aligned with and receive dowel pins 70 that extend from mounting plate 800A. Pivoting arrangement 948 of mounting member 800A is pivoted from a horizontal position in which lower portion 952 is not received within slot 1252 defined by mounting member 1232 to a vertical position in which lower portion 952 is received within slot 1252. Knob 952 is rotated about its axis (clockwise or counterclockwise) such that the bottom surface 954 of knob 952 contacts mounting member 1232 to maintain engagement between mounting member 1232 and the assemblage of tibial drill guide mount 700 and mounting plate 800A.

As illustrated in FIGS. 75 and 76, drill guide assembly 1260 is coupled to the appropriate side 1204, 1206 of base plate 1202 such that drill guide assembly 1260 will be disposed directly adjacent to the heel of a patient's foot. The coupling of drill guide assembly 1260 to base plate 1202 includes inserting pegs 1276, 1278 into holes 1220 defined by side 1204 or into holes 1222 defined by side 1206. As pegs 1276, 1278 are inserted into holes 1220 or 1222, biased detent 1212 or 1214 outwardly flexes in response to contacting base 1262 of drill guide assembly 1260 and is then urged into a locking engagement within one of slots 1272 or 1274 defined by sides 1268, 1270 by a biasing member when a detent 1212 or 1214 is aligned with a slot 1272 or 1274.

Foot plate 1326 is coupled to the side 1204, 1206 of base plate 1202 that is opposite the side 1204, 1206 to which drill guide assembly 1260 is coupled such that foot plate 1326 is disposed adjacent to the forefoot of the patient. The coupling of foot plate 1326 to base plate 1202 includes inserting pegs 1332, 1334 into holes 1220 defined by side 1204 or into holes 1222 defined by side 1206 of base plate 1202. As pegs 1332, 1334 are inserted into holes 1220 or 1222, biased detent 1212 or 1214 outwardly flexes in response to contacting coupling portion 1330 of foot plate 1326. Detent 1212 or 1214 is urged into a slot 1340 or 1342 defined by a side 1336 or 1338 of coupling portion 1330 when detent 1212 or 1214 is aligned with slot 1340 or 1342.

The distance between base plate 1202 and mounting member 1232 can be adjusted by unscrewing locking screw 1242 such that mounting member 1232 can be slid along rods 1226, 1228. When the desired positioning of mounting member 1232 relative to base plate 1202 has been achieved, locking screw 1242 is rotated to lock mounting member 1232 at its position along rods 1226, 1228.

A trocar 74, which is illustrated in FIG. 77, having ink applied to its tip is inserted into bore 1300 defined by central member 1292 of locking bushing assembly 1290 and touched the skin of the patient's foot to create a mark. Drill guide assembly 1260 is removed from its engagement with base plate 1202 by pressing the biased detent 1212, 1214 that is engaged with a slot 1268, 1270 defined by base 1262 such that detent 1212, 1214 is urged out of its engagement with the slot 1268, 1270. With detent 1212, 1214 disengaged from slot 1268, 1270, base 1262 is pulled away from base 1202 until pegs 1278, 1280 are removed from holes 1220 or 1222.

With drill guide assembly 1260 removed, access to the calcaneus 20 of the patient is made by making a small incision at the marked location using a scalpel or other surgical cutting tool. Drill guide assembly 1260 is then re-coupled to base plate 1202 as described above.

A drill bushing or cannula (not shown) is inserted into bore 1300 and then locked in place by rotating knob 1304 of locking bushing assembly 1294. Rotating knob 1304 causes the threads formed on inner surface 1310 of knob 1304 to engage the threads of threaded flared region 1294. As knob

1304 is rotated in one direction, e.g., a clockwise direction, the rotation of knob 1304 relative to central member 1292 causes knob 1304 to be advanced along central member 1292 towards base 1262, which results in taper 1318 contacting flexible prongs 1298. Flexible prongs 1298 are urged inwardly towards one another as knob 1304 moves towards base 1262 thereby providing a frictional lock between locking bushing assembly 1290 and drill bushing or cannula.

With drill bushing or cannula locked to locking bushing assembly 1290, a drill is used to create a pilot hole through the calcaneus 20, talus 14, and into tibia 16. As the drill exits talus 14, the conically shaped internal surface 748 of tibial drill cartridge 702 guides the tip of the drill into tibia 14. Once the pilot hole has been drilled to a desired depth into tibia 14, the drill is backed out and tibial drill cartridge 702 is removed from tibial drill guide mount 700. Removal of cartridge 702 includes inserting a threaded dowel or rod into threaded blind hole 770 and pulling on threaded dowel or rod to remove cartridge 702 from tibial guide mount 700.

A reamer head 66 is inserted into the space vacated by cartridge 702 and is coupled to a driving rod 65 of a reamer that is received within the vacated space having been inserted through the drill bushing or cannula locked in locking bushing assembly 1290.

Once reamer head 66 is coupled to reamer rod 65, reamer stabilizer 1000 is secured to mounting plate 800A as described with reference to FIGS. 78 and 79. Distal end 1004 of stabilizer body 1002 is inserted into aperture 804 of mounting plate 800A and into body 704 via recess 718 defined by front side 706 of tibial drill guide mount 700. Reamer stabilizer 1000 continues to be advanced until steps 1034, 1036 contact top surface 806 in an abutting relationship. With steps 1034, 1036 contacting top surface 806, detent 1176 disposed on the inner surface 1178 of pivoting button 1156 is received within slot 826 of mounting plate 800A.

When detent 1176 is disposed within slot 826 and reamer stabilizer 1000 is coupled to mounting plate 800A, reamer driving rod 65 is received within notch 1018 defined at the distal end 1004 of stabilizer body 1002. Guiding assembly 1052 is actuated such that reamer guide body 1054 in combination with notch 1018 encloses and surrounds the reamer driving rod 65 as best seen by comparing FIGS. 64 and 65. Guiding assembly 1052 is actuated by applying a downward pressure (i.e., pressure in a distal direction) to head 1102, which urges plunger rod 1086 and pivot rod 1074 in a distal direction. The movement of plunger rod 1086 and pivot rod 1074 in the distal direction forces reamer guide body 1054 to pivot about hole 1056, which is pinned to stabilizer body 1002 by pin 1042. The distal end 1078 of pivot rod 1074 may outwardly flex with respect to hole 1080 at the proximal end 1084 as reamer guide body 1054 pivots about hole 1056. Although reamer guide body 1054 is illustrated as entirely extending across notch 1018, one of ordinary skill in the art will understand that reamer guide body 1054 will extend only partially across notch 1018 in some embodiments.

Still referring to FIGS. 64 and 65, locking assembly 1122 is configured to automatically lock guiding assembly 1052 in its engaged position with the reamer driving rod 65. Locking button 1124 is urged by biasing member 1152 towards in the direction towards head 1102 such that, when angled surface 1110 of head 1102 is disposed below angled surface 1138 of locking button 1124, locking button 1124 slides over the head 1102 to maintain the engagement of the reamer 65 and concave guiding surface 1058 of reamer guide body 1054. The reamer 65, 66 is advanced into the pilot intramedullary channel previously formed by the drill while being supported by reamer stabilizer 1000, which maintains the direction in which reamer 65, 66 is advanced into tibia 16 and prevents the reamer 65, 66 from wandering.

Once the intramedullary channel has been reamed to a desired depth, the reamer 65, 66 is retracted through the intramedullary channel until the reamer head 66 is received within the resected joint space 22. Reamer stabilizer 1000 is then removed from its engagement with reamer rod 65 and mounting plate 800A. To disengage reamer stabilizer 1000 from its engagement with the reamer 65, locking button 1124 is pushed in a direction away from head 1102 until locking button 1124 is received within cavity 1010 defined by stabilizer body 1002.

Biasing member 1120 of guiding assembly 1052, which is disposed in abutting contact with distal end 1106 of head 1102, causes head 1102, plunger rod 1086, and pivot rod 1074 to move in a proximal direction when locking button 1124 does not contact head 1102 or otherwise impede head 1102 from moving in the proximal direction. The proximal movement of head 1102, plunger rod 1086, and pivot rod 1074 causes reamer guide body 1054 to pivot about pin 1048 due to the cross-pinned engagement between pivot rod 1074 and reamer guide body 1054.

With guiding assembly 1054 disengaged from the reamer, reamer stabilizer 1000 is disengaged from mounting plate 800A by pressing pivoting button 1156 such that button 1156 pivots about pin 1076 and detent 1176 is removed from its engagement with slot 826. Reamer stabilizer 1000 is then pulled from aperture 804. The reamer head 66 is then removed from resected joint space 22.

Knob 952 is rotated in a direction opposite to the direction in which knob 952 was rotated to tighten pivoting arrangement to mounting member 800A such that the bottom surface 954 loosens its frictional engagement with mounting member 1232. Pivoting arrangement 948 is pivoted back to a horizontal position, and locking screw 1242 of mounting member 1232 is loosened by rotating knob 1244 in a direction that is opposite the direction in which knob 1244 was rotated to tighten locking screw 1242. Mounting member 1232 slides along rods 1226, 1228 as base plate 1202 is moved away from the patient's foot.

With the drill bushing or cannula still disposed within the calcaneus 20 and talus 14, drill guide assembly 1260 is decoupled from its engagement with base plate 1202 in the same manner as described above. Foot holder assembly 1200 is then removed such that drill guide assembly 1260, tibial drill guide mount 700, and mounting plate 800A are still engaged with the patient's foot. K-wires 62 used to maintain the position of tibial drill guide mount 700 and mounting plate 800A are removed, and then tibial drill guide mount 700 and mounting plate 800A are removed.

With drill bushing or cannula still disposed within the calcaneus 20 and talus 14, k-wires 62 are inserted through one or more holes 1282 to secure drill guide assembly 1260 to the foot of the patient as illustrated in FIG. 80. Once drill guide assembly 1260 is secured, a tool for driving components of a modular ankle prosthesis into the intramedullary canal formed by the reamer is inserted through drill guide or cannula held by drill guide assembly 1260. The remainder of the installation prosthesis is described in U.S. Pat. No. 7,534,246 issued to Reiley et al.

Anterior Approaches

The disclosed systems and methods described above can also be adapted to enable an intramedullary cavity to be formed in the tibia of a patient via an anterior approach once resected joint space 22 has been formed using tibial resec-

tion guide mount **100** and tibial resection guide **132** to resect the inferior end of a patient's tibial and uses talar resection guide mount **102** and talar resection guide **166** to resect the superior surface of a patient's talus **14** to create resected joint space **22** as illustrated in FIG. **15**. The anterior approach of forming an intramedullary channel in a patient's tibia avoids drilling through the calcaneus and talus of the patient.

Referring now to FIGS. **81-89**, a custom anterior reaming guide mount **1400** is illustrated as being disposed within resected joint space **22**. Reaming guide mount **1400** is formed from a resilient polymer material of the type that is suitable for use in connection with stereo lithography, selective laser sintering, or like manufacturing equipment.

Reaming guide mount **1400** includes a body **1402** having an inferior surface **1404** configured to mate against the flat formed on the superior surface of the resected talus. The superior surface **1406** includes a pair of opposed angled surfaces **1408** that are configured to correspond to the cuts made using tibial resection guide **166**.

A mating portion **1410** extends from superior surface **1406** and includes a conformal bone engaging surface **1412**, which is complementary to a surface of the patient's tibia **16**. Mating portion **1410** defines holes **1414**, **1416** that are sized and configured to receive k-wires **62** for securing reaming guide mount **1400** to talus **16**. Superior surface **1406** also defines an opening **1418** through which a reamer head **66** can be received.

Body **1402** also includes a rear wall **1420** and a pair of opposed side walls **1422**, **1424** that define a cavity **1426** with superior wall **1428** and inferior wall **1430**. In some embodiments, the respective interfaces between superior wall **1428** and side walls **1422**, **1424** include chamfers **1432**, **1434** or other geometric features used for properly locating insert **1440**.

As best seen in FIGS. **82**,**84**, and **85**, insert **1440** has an overall shape that is complementary to the internal geometry of cavity **1426** defined by reaming guide mount **1400** and can be fabricated from a more durable material than reaming guide mount **1400** such as, for example, a metal material. In particular, insert **1440** includes an inferior surface **1442**, a superior surface **1444**, side surfaces **1446**, **1448**, and a front surface **1450**. Superior surface **1444** defines an opening **1452** (FIG. **85**) through which a reamer head **66** can be received as described in greater detail below.

Front surface **1450** also defines an opening **1454** that is sized such that a reamer head **66** can be received within opening **1454**. Openings **1452** and **1454** communicate with each other such that the reamer head inserted within opening **1454** can be received within opening **1452** via internal communication between the openings **1452**, **1454**. In some embodiments, opening **1454** is smaller than the size of a reamer head **66**, but provides a surgeon access a reamer head **66** disposed within opening **1454** such that reamer head **66** can be coupled to a reamer driving rod **65**.

An angled front face **1456** is disposed between front face **1450** and inferior surface **1442**. Angled front face **1456** defines a passageway **1458** that extends from angled front face **1456** to bottom surface **1460** of internal chamber **1562**. Passageway **1562** is sized and configured to receive a flexible reamer.

In operation, reaming guide mount **1400** is inserted into resected joint space **22**. Angled surfaces **1408**, **1410** of superior surface **1406** and conformal bone engaging surface **1414** precisely locate reaming guide mount **1400** within the resected joint space **22**.

A reamer head **66** is inserted into opening **1452** defined by superior surface **1452** of insert **1440**. Insert **1440** is inserted into cavity **1428** until opening **1452** defined by superior surface **1444** of insert **1440** aligns with opening **1420** defined by superior surface **1420** of reaming guide mount **1400**. A reamer rod **65** is inserted into passageway **1458** defined by angled front face **1456** and coupled to reamer head **66** disposed within opening **1452**. A surgeon may insert one or more tools in opening **1454** to secure reamer head **66** to reamer rod **65**. Reamer head **66** can then be advanced into the patient's tibia **16**.

In some embodiments, reamer stabilizer **1000** is used to in connection with reaming guide mount **1400** and insert **1440**. For example and as illustrated in FIGS. **87-89**, with a reamer head **66** and reamer body **65** assembled together within the construct of reaming guide mount **1400** and insert **1440**, which are disposed within resected joint space **22**, reamer stabilizer **1000** is coupled to stabilizer driving rod **65**. To couple reamer stabilizer **1000** to stabilizer driving rod **65**, distal end **1004** of stabilizer body **1002** is inserted into opening **1454** defined by front surface **1450** of insert **1440** until driving rod **65** is received within notch **1018** defined at the distal end **1004** of stabilizer body **1002**.

Guiding assembly **1052** is actuated such that reamer guide body **1054** and notch **1018** encloses and surrounds the reamer driving rod **65** as best seen in FIG. **89**. Guiding assembly **1052** is actuated by applying a downward pressure (i.e., pressure in a distal direction) to head **1102**, which urges plunger rod **1086** and pivot rod **1074** in a distal direction. The movement of plunger rod **1086** and pivot rod **1074** in the distal direction forces reamer guide body **1054** to pivot about hole **1056**, which is pinned to stabilizer body **1002** by pin **1042**. The distal end **1078** of pivot rod **1074** may outwardly flex with respect to hole **1080** at the proximal end **1084** as reamer guide body **1054** pivots about hole **1056**.

Locking assembly **1122** is configured to automatically lock guiding assembly **1052** in its engaged position with the reamer driving rod **65**. As described above, locking button **1124** is urged by biasing member **1152** towards in the direction towards head **1102** such that, when angled surface **1110** of head **1102** is disposed below angled surface **1138** of locking button **1124**, locking button **1124** slides over the head **1102** to maintain the engagement of the reamer rod **65** and concave guiding surface **1058** of reamer guide body **1054**.

The reamer **65**, **66** is advanced into tibia **16** to form a reamed intramedullary channel while being supported by reamer stabilizer **1000**, which maintains the direction in which reamer **65**, **66** is advanced into tibia **16** and prevents the reamer **65**, **66** from wandering within tibia **16**.

Once the intramedullary channel has been reamed to a desired depth, the reamer **65**, **66** is retracted through the intramedullary channel until the reamer head **66** is received within opening **1420** defined by superior surface **1406** of reaming guide mount **1400** and/or within opening **1452** defined by superior surface **1444** defined by insert **1440**. Reamer stabilizer **1000** is then removed from its engagement with reamer rod **65**.

To disengage reamer stabilizer **1000** from its engagement with the reamer rod **65**, locking button **1124** is pushed in a direction away from head **1102** until locking button **1124** is received within cavity **1010** defined by stabilizer body **1002**. Biasing member **1120** of guiding assembly **1052**, which is disposed in abutting contact with distal end **1106** of head **1102**, causes head **1102**, plunger rod **1086**, and pivot rod **1074** to move in a proximal direction when locking button **1124** does not contact head **1102** or otherwise impede head

1102 from moving in the proximal direction. The proximal movement of head 1102, plunger rod 1086, and pivot rod 1074 causes reamer guide body 1054 to pivot about pin 1048 due to the cross-pinned engagement between pivot rod 1074 and reamer guide body 1054. With guiding assembly 1054 disengaged from the reamer, reamer stabilizer 1000 is pulled out of opening 1454 defined by front surface 1450 of insert 1440.

As will be understood by one of ordinary skill in the art, the size and shape of reaming guide mount and insert may be varied. For example, FIGS. 90-94 illustrate another embodiment of reaming guide mount 1500 and insert 1540. As shown in FIGS. 90 and 92, body 1502 of reaming guide mount 1500 has an inferior surface 1504 configured to mate against the flat formed on the superior surface of the resected talus. The superior surface 1506 includes a pair of opposed angled surfaces 1508 that are configured to correspond to the cuts made using tibial resection guide 166.

Mating portion 1510 extends from superior surface 1506 and includes a conformal bone engaging surface 1512 (FIG. 92), which is complementary to a surface of the patient's tibia 16. Holes 1514, 1516 are defined by mating portion 1512 and are sized and configured to receive k-wires 62 for securing reaming guide mount 1500 to talus 16. Superior surface 1508 also defines an opening 1518 through which a reamer head 66 can be received.

Body 1502 also includes a rear wall 1520 (FIG. 92) and a pair of opposed side walls 1524, 1526 that define a cavity 1526 with superior wall 1528 and inferior wall 1530 (FIGS. 90 and 92). The respective interfaces between superior wall 1528 and side walls 1524, 1526 include chamfers 1432, 1434 or other geometric features used for properly locating insert 1540. An inwardly projecting structure 1538 extends from side wall 1524.

As best seen in FIG. 91, insert 1540 has a triangular wedge shape such that it is able to be received between inwardly projecting structure 1538 and inferior wall 1530 of reaming guide mount 1500. Insert 1540 includes an inferior surface 1542, a superior surface 1544, side surfaces 1546, 1548 (FIG. 94), and a front surface 1550. Angled front face 1556 is disposed between front face 1550 and inferior surface 1542 and defines a passageway 1558 that extends from angled front face 1556 to superior surface 1544. Passageway 1558 is sized and configured to receive a flexible reamer rod 65.

As shown in FIGS. 93 and 94, reamer stabilizer 1000 is received within cavity 1526 adjacent to insert 1540 such that reamer stabilizer 1000 abuts both inwardly projecting structure 1536 and insert 1540. Reamer stabilizer 1000 stabilizes reamer 65, 66 as reamer 65, 66 is advanced into the tibia 16 of a patient as described above.

Another embodiment of an anterior reaming guide mount is illustrated in FIGS. 95-100. Reaming guide mount 1600 includes a body 1062 having an inferior surface 1604 (FIG. 96) configured to mate against the flat formed on the superior surface of the resected talus 14. The superior surface 1606 includes a pair of opposed angled surfaces 1608 (FIGS. 99 and 100) that are configured to correspond to the cuts made using tibial resection guide 166.

Mating portion 1610 extends from superior surface 1606 and includes a conformal bone engaging surface 1614, which is complementary to a surface of the patient's tibia 16. Holes 1614, 1616 are defined by mating portion 1612 and are sized and configured to receive k-wires 62 for securing reaming guide mount 1600 to talus 16. Superior surface 1606 also defines an opening 1618 through which a reamer head 66 can be received.

Body 1602 also includes a front surface 1622 and an angled front surface 1624 that defines a passageway 1626 that communicates with opening 1620. Passageway 1626 is configured to receive a flexible reamer driving rod 65 that is to be coupled to a reamer head 66 disposed within opening 66.

The disclosed systems and methods advantageously utilize custom manufactured surgical instruments, guides, and/or fixtures that are based upon a patient's anatomy to reduce the use of fluoroscopy during a surgical procedure. In some instances, the use of fluoroscopy during a surgical procedure may be eliminated altogether. The custom instruments, guides, and/or fixtures are created by imaging a patient's anatomy with a computer tomography scanner ("CT"), a magnetic resonance imaging machine ("MRI"), or like medical imaging technology prior to surgery and utilizing these images to create patient-specific instruments, guides, and/or fixtures.

Although the invention has been described in terms of exemplary embodiments, it is not limited thereto. Rather, the appended claims should be construed broadly, to include other variants and embodiments of the invention, which may be made by those skilled in the art without departing from the scope and range of equivalents of the invention.

What is claimed is:

1. A surgical device, comprising:

an elongate body having a proximal end and a distal end with a step formed along at least one side of the body, the distal end of the elongate body defining a notch sized and configured to receive a reamer;

a coupling assembly supported by the elongate body including (i) a reamer guide body disposed at the distal end of the elongate body and configured to move between a first position and a second position, and (ii) first and second rods disposed within a channel defined by the elongate body, the first rod coupled to a head extending outwardly from the longitudinal channel, and the second rod pivotably coupled to the first rod and to an end of the reamer guide body; and

a locking assembly supported by the elongate body, the locking assembly configured to releasably engage the coupling assembly to maintain the reamer guide body in the second position, wherein the reamer guide body extends at least partially across the notch in the second position.

2. The surgical device of claim 1, wherein the coupling assembly includes a biasing member disposed within the channel, the biasing member configured to bias the head in a proximal direction.

3. The surgical device of claim 1, wherein the locking assembly includes a button slidably positioned within a cavity defined at the proximal end of the elongate body, and a biasing member configured to urge the button in a direction towards the coupling assembly.

4. The surgical device of claim 3, wherein a lower portion of the button includes an angled surface that complements an angled surface of the head of the coupling assembly.

5. The surgical device of claim 1, further comprising a second coupling assembly coupled to the elongate body, the second coupling assembly configured to releasably secure the surgical device to another instrument in combination with the step.

6. The surgical device of claim 5, wherein the second coupling assembly includes a button pivotably coupled to the at least one side of the elongate body, and a biasing member disposed within a cavity formed along the at least

one side of the elongate body, the biasing member configured to exert a force on the button.

7. The surgical device of claim **6**, wherein the button includes a detent at a first end that is disposed opposed an end on which the biasing member exerts the force.

8. The surgical device of claim **1**, wherein the reamer guide body includes an arcuate surface configured to support the reamer, the reamer guide body disposed adjacent to a first hole configured to receive a first pin for pivotably coupling the reamer guide body to the distal end of the elongate body, and a second hole is defined adjacent to the first hole, the second hole configured to receive a second pin for pivotably coupling the reamer guide body to the pivotable second rod of the coupling assembly.

9. The surgical device of claim **1**, wherein the coupling assembly includes a plunger rod disposed within a channel defined by the elongate body, a first end of the plunger rod is coupled to the pivotable second rod, and a second end of the plunger rod is coupled to the head including an upper portion that is disposed outwardly of the channel; and a first biasing member disposed within the channel, the biasing member disposed between a lower portion of the head and a reduced diameter area of the channel defined by the elongate body, the biasing member configured to urge the head in a proximal direction.

10. The surgical device of claim **9**, wherein the locking assembly includes a button slidably positioned within a cavity defined at the proximal end of the elongate body, and a second biasing member configured to urge the button in a direction towards the head of the coupling assembly.

11. The surgical device of claim **10**, wherein a lower portion of the button includes an angled surface that complements an angled surface of the head of the coupling assembly.

12. A reamer stabilizer, comprising: an elongate body extending from a proximal end to a distal end, the distal end of the elongate body defining a notch for receiving a reamer; a slidable guide assembly supported by the elongate body, the slidable guide assembly including a reamer guide body pivotably coupled to the distal end of the elongate body, the reamer guide body configured to move between a first position and a second position and including an arcuate surface for supporting the reamer wherein the reamer guide body defines first and second holes, the first hole is configured to receive a first pin for pivotably coupling the reamer guide body to the distal end of the elongate body, and the second hole is configured to receive a second pin for pivotably coupling the reamer guide body to a pivoting rod of the slidable guide assembly; and a locking assembly slidably supported by the elongate body, the locking assembly configured to move between a third position and a fourth position in which the locking assembly releasably engages the slidable guide assembly to maintain the reamer guide body in the second position, wherein the reamer guide body extends at least partially across the notch in the second position.

13. The reamer stabilizer of claim **12**, wherein the slidable guide assembly includes a plunger rod disposed within a longitudinal channel defined by the elongate body, a first end of the plunger rod is coupled to the pivoting rod, and a second end of the plunger rod is coupled to a head including an upper portion that is disposed outwardly of the elongate channel; and a first biasing member disposed within the elongate channel, the biasing member disposed between a lower portion of the head and a reduced diameter area of the longitudinal channel defined by the elongate body, the biasing member configured to urge the head in a proximal direction.

14. The reamer stabilizer of claim **12**, wherein the locking assembly includes a button slidably positioned within a cavity defined at the proximal end of the elongate body, and a second biasing member configured to urge the button in a direction towards the slidable guide assembly.

15. The reamer stabilizer of claim **12**, further comprising a coupling assembly includes a button pivotably coupled to a side of the elongate body, and a biasing member disposed within a cavity formed along the side of the elongate body, the biasing member configured to exert a force on the button.

16. The reamer stabilizer of claim **15**, wherein the button includes a detent at a first end that is disposed opposed an end on which the biasing member exerts the force.

* * * * *