US012402489B1

(12) **United States Patent**
Lee et al.

(10) **Patent No.: US 12,402,489 B1**
(45) **Date of Patent: *Aug. 26, 2025**

(54) **HIGH RESOLUTION ADVANCED OLED SUB-PIXEL CIRCUIT**

(71) Applicant: **Applied Materials, Inc.**, Santa Clara, CA (US)

(72) Inventors: **Jungmin Lee**, Santa Clara, CA (US); **Dieter Haas**, Santa Clara, CA (US)

(73) Assignee: **Applied Materials, Inc.**, Santa Clara, CA (US)

(*) Notice: Subject to any disclaimer, the term of this patent is extended or adjusted under 35 U.S.C. 154(b) by 37 days.

This patent is subject to a terminal disclaimer.

(21) Appl. No.: **18/886,547**

(22) Filed: **Sep. 16, 2024**

Related U.S. Application Data

(60) Provisional application No. 63/675,171, filed on Jul. 24, 2024.

(51) **Int. Cl.**
H10K 59/122 (2023.01)
H10K 59/80 (2023.01)

(52) **U.S. Cl.**
CPC ***H10K 59/122*** (2023.02); ***H10K 59/873*** (2023.02)

(58) **Field of Classification Search**
CPC H10K 59/122; H10K 59/35; H10K 59/873; H10K 59/80515; H10K 71/233; H10K 2102/351
See application file for complete search history.

(56) **References Cited**

U.S. PATENT DOCUMENTS

11,552,143	B1 *	1/2023	Choung	H10K 59/80521
2016/0043341	A1 *	2/2016	Heo	H10K 59/122 438/23
2016/0079325	A1 *	3/2016	Lee	H10K 71/00 438/26
2020/0312930	A1 *	10/2020	Choi	H10K 59/122
2022/0344417	A1 *	10/2022	Choung	H10K 59/173
2023/0059253	A1 *	2/2023	Baek	H10K 59/80521

* cited by examiner

Primary Examiner — Nduka E Ojeh
(74) *Attorney, Agent, or Firm* — Patterson + Sheridan, LLP

(57) **ABSTRACT**

Embodiments described herein generally relate to a display. In one or more embodiments, a sub-pixel circuit includes at least two anodes disposed over a substrate, with adjacent anodes defining a well. The sub-pixel circuit further includes adjacent overhang structures. The overhang structures include a first portion disposed in the well and a second portion disposed over the first portion, and a portion of the uppermost surface of the anode. The second portion includes overhang extensions extending past lower sidewalls of the first portion, and an upper surface. The upper surface of the second portion is above the uppermost surface of the anodes. The well has a trench area defined by the lower sidewalls and a bottom surface of the overhang extensions with a gap between the overhang extensions of the adjacent overhang structures.

28 Claims, 14 Drawing Sheets

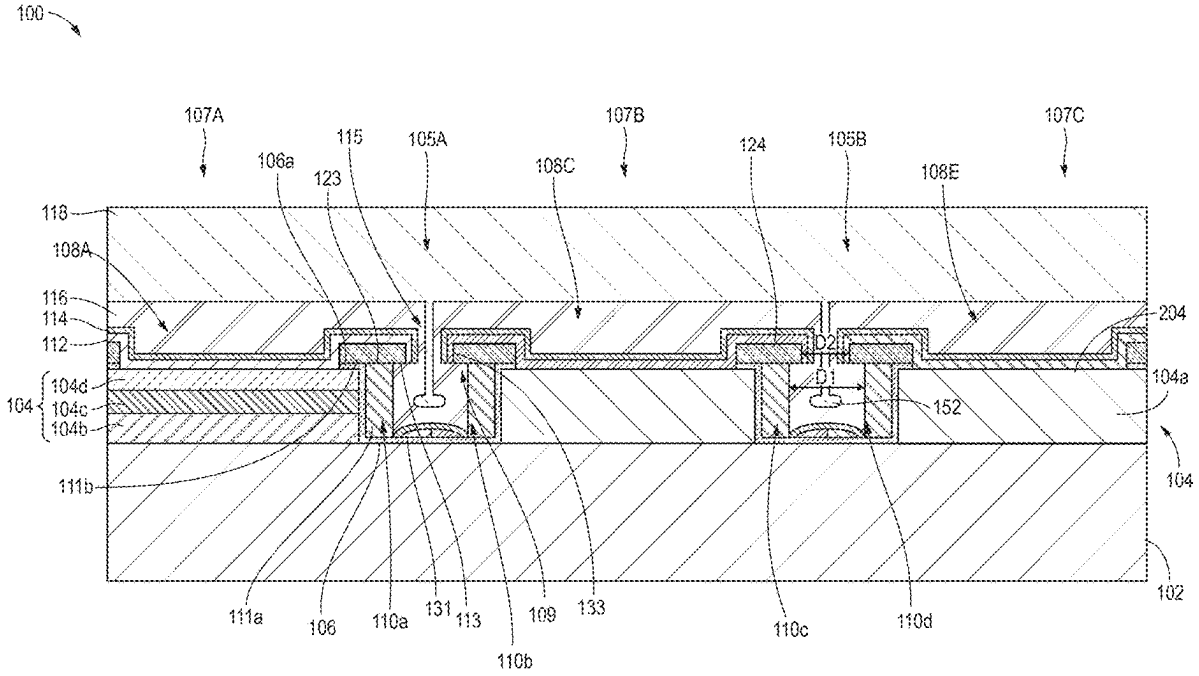

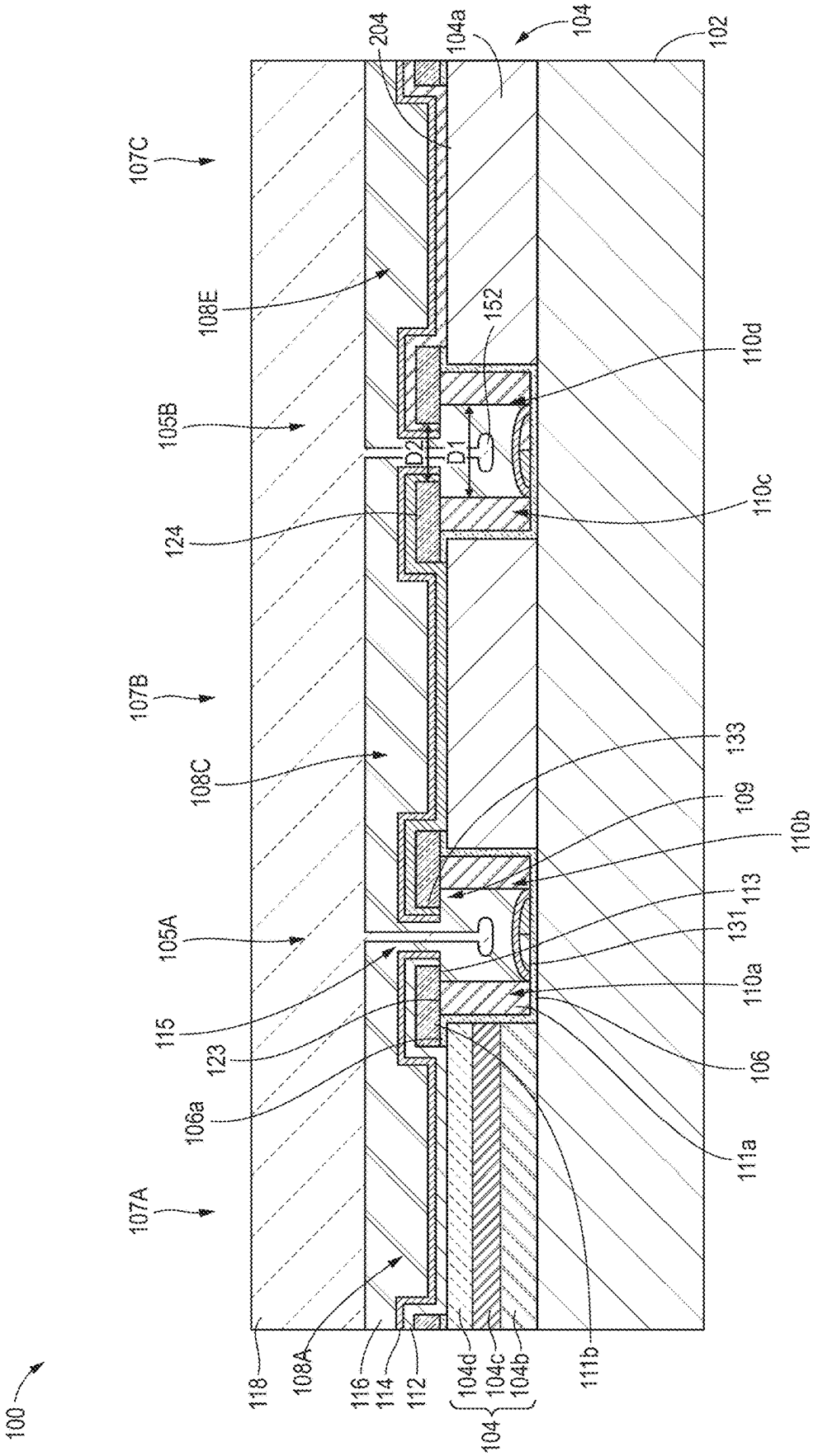
100
118
108A
116
114
112
104d
104c
104b
104
111b
106a
123
115
105A
107A
108C
107B
124
105B
108E
107C
204
104a
104
102
152
D2
D1
110d
110c
133
109
110b
113
131
110a
106
111a

FIG. 1A

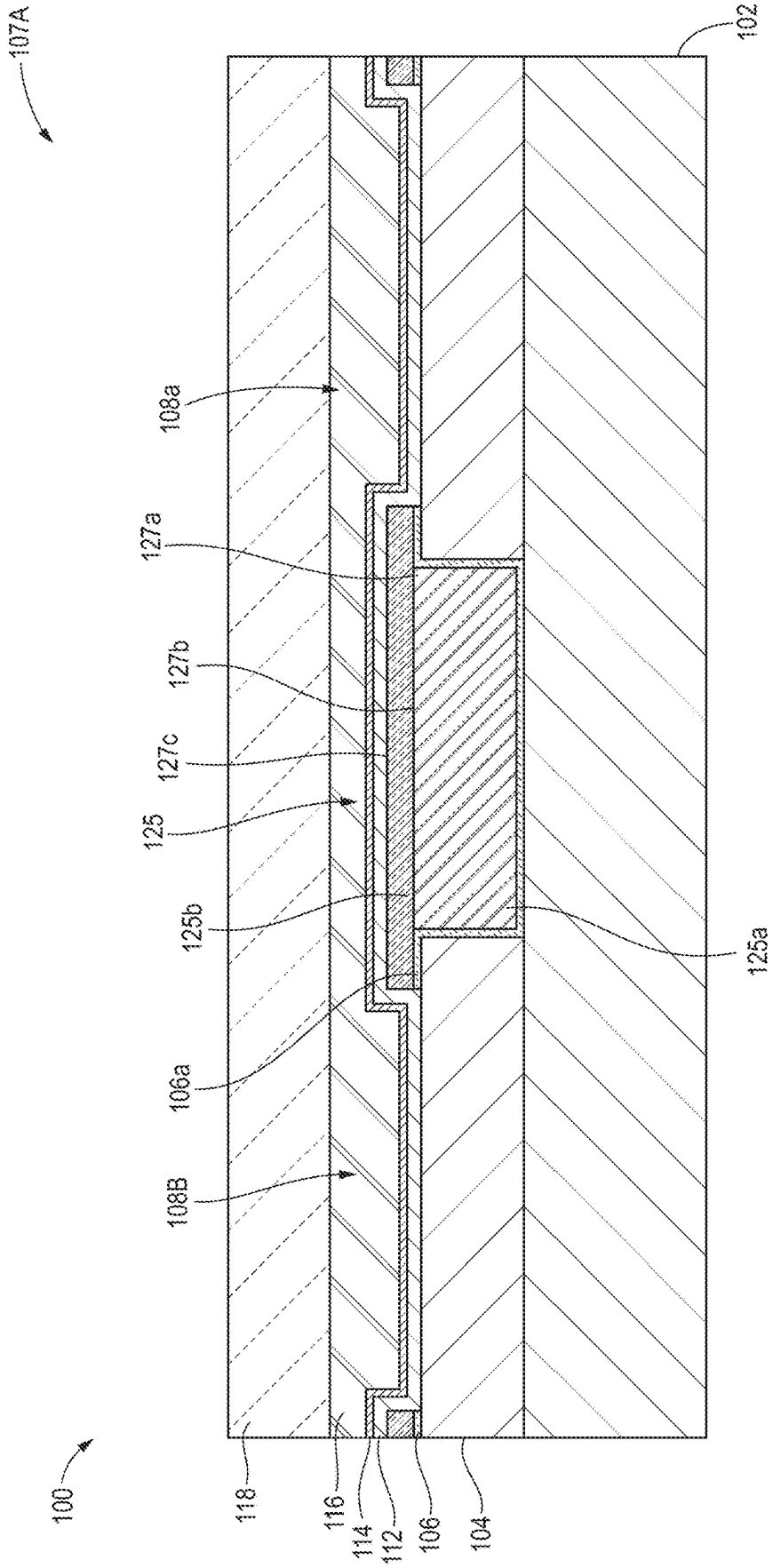
107A
100
118
116
114
112
106
104
108B
106a
125b
125
127c
127b
127a
108a
102
125a

FIG. 1B

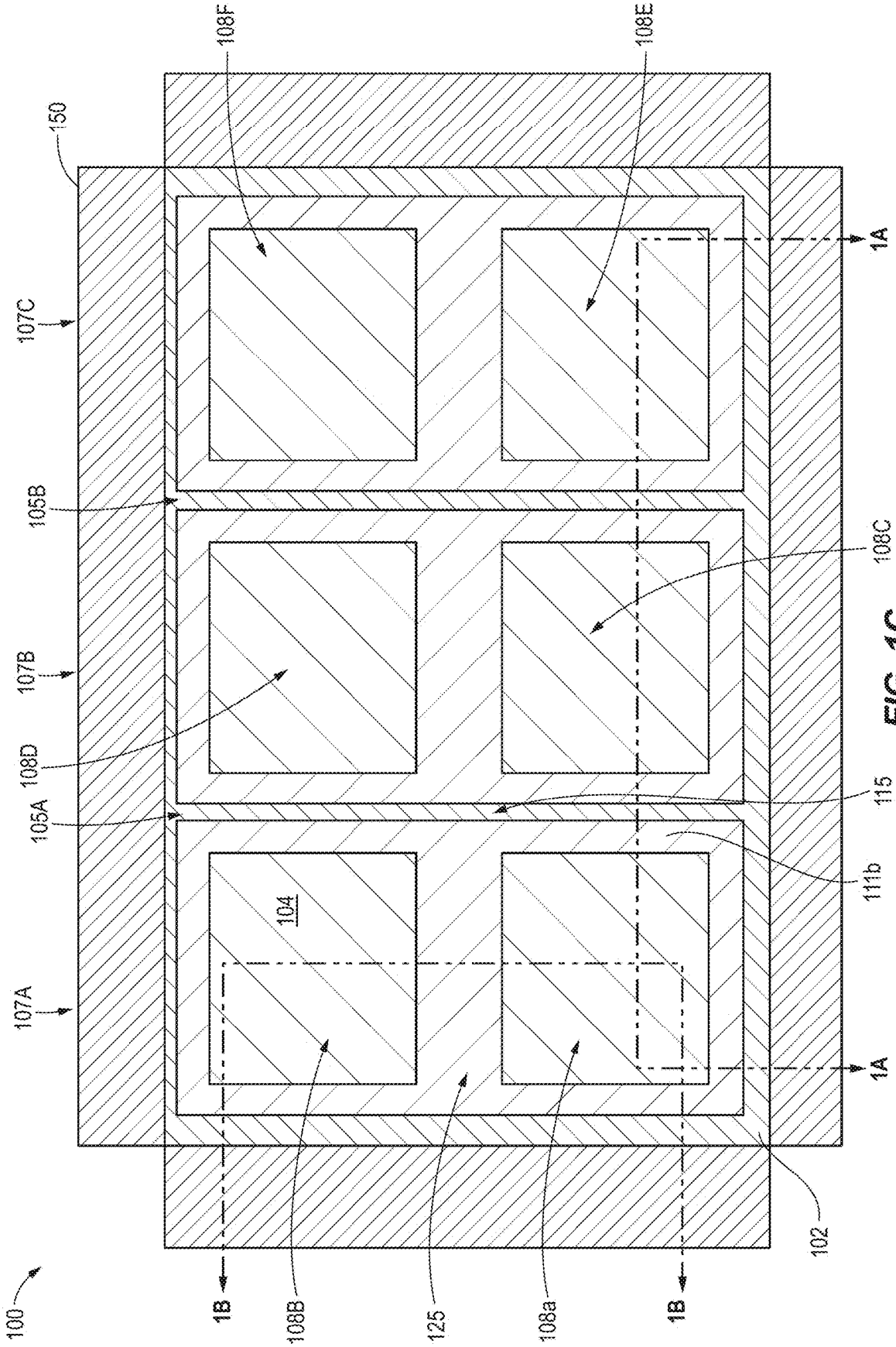
100
1B
108B
125
108a
1B
102
107A
1A
104
111b
105A
115
108D
107B
108C
105B
107C
1A
150
108F
108E

FIG. 1C

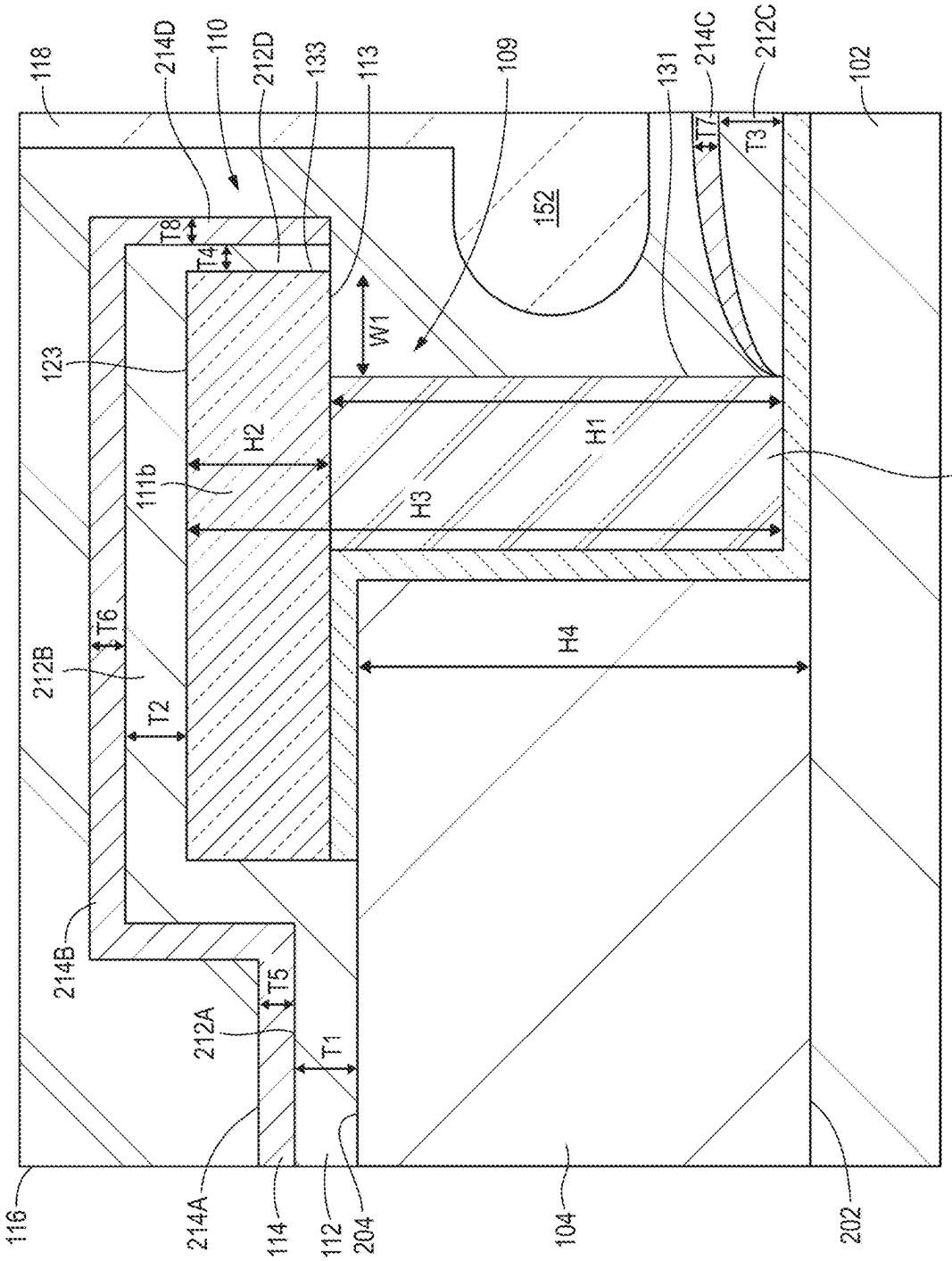
118
214D
110
212D
133
113
109
131
214C
212C
102
T7
T3
152
T8
T4
W1
123
H2
H1
111b
H3
111a
T6
212B
H4
T2
214B
T5
212A
T1
116
214A
114
112
204
104
202

FIG. 2

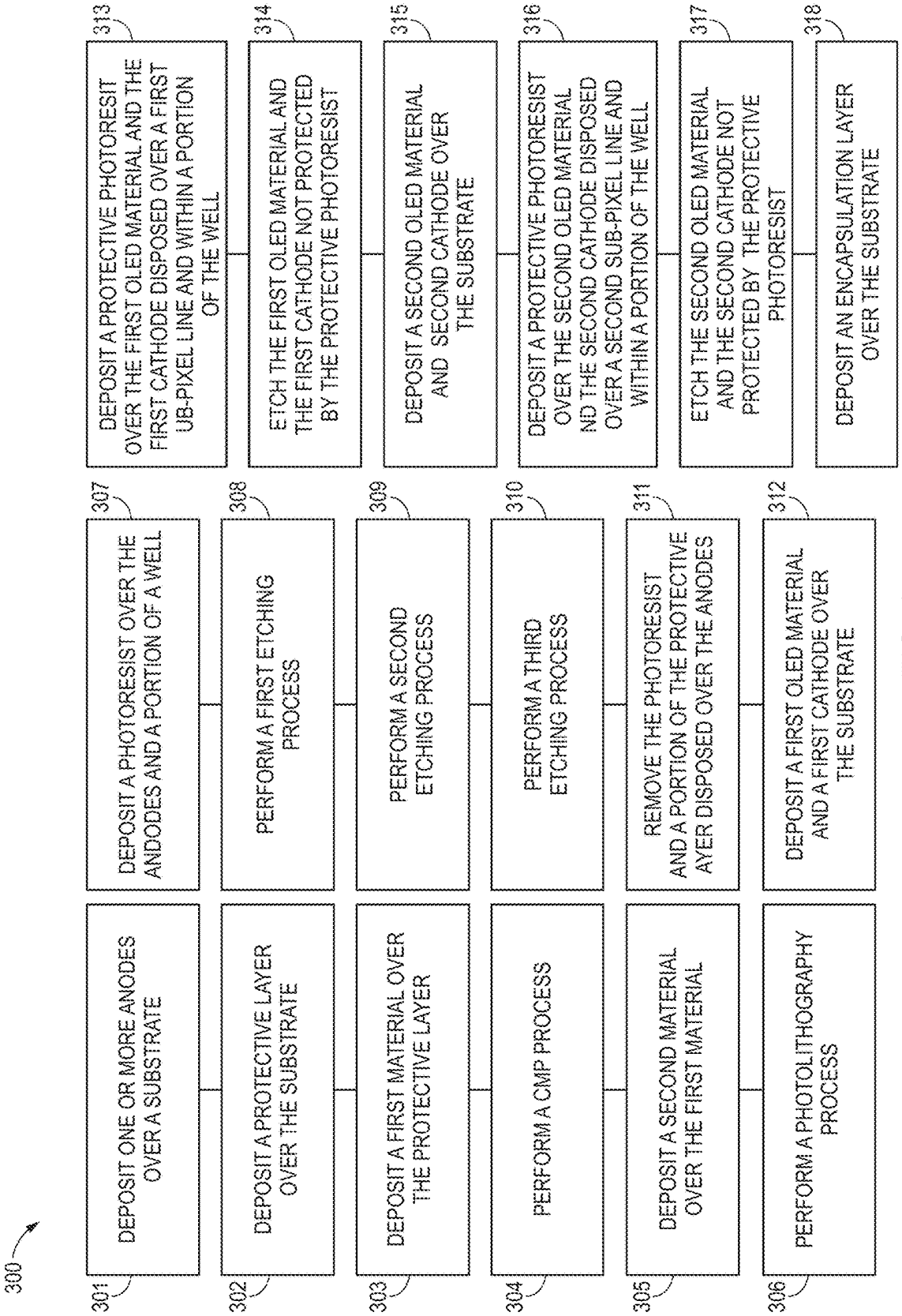
300
301
DEPOSIT ONE OR MORE ANODES OVER A SUBSTRATE
302
DEPOSIT A PROTECTIVE LAYER OVER THE SUBSTRATE
303
DEPOSIT A FIRST MATERIAL OVER THE PROTECTIVE LAYER
304
PERFORM A CMP PROCESS
305
DEPOSIT A SECOND MATERIAL OVER THE FIRST MATERIAL
306
PERFORM A PHOTOLITHOGRAPHY PROCESS
307
DEPOSIT A PHOTORESIST OVER THE ANDODES AND A PORTION OF A WELL
308
PERFORM A FIRST ETCHING PROCESS
309
PERFORM A SECOND ETCHING PROCESS
310
PERFORM A THIRD ETCHING PROCESS
311
REMOVE THE PHOTORESIST AND A PORTION OF THE PROTECTIVE AYER DISPOSED OVER THE ANODES
312
DEPOSIT A FIRST OLED MATERIAL AND A FIRST CATHODE OVER THE SUBSTRATE
313
DEPOSIT A PROTECTIVE PHOTORESIT OVER THE FIRST OLED MATERIAL AND THE FIRST CATHODE DISPOSED OVER A FIRST UB-PIXEL LINE AND WITHIN A PORTION OF THE WELL
314
ETCH THE FIRST OLED MATERIAL AND THE FIRST CATHODE NOT PROTECTED BY THE PROTECTIVE PHOTORESIST
315
DEPOSIT A SECOND OLED MATERIAL AND SECOND CATHODE OVER THE SUBSTRATE
316
DEPOSIT A PROTECTIVE PHOTORESIST OVER THE SECOND OLED MATERIAL ND THE SECOND CATHODE DISPOSED OVER A SECOND SUB-PIXEL LINE AND WITHIN A PORTION OF THE WELL
317
ETCH THE SECOND OLED MATERIAL AND THE SECOND CATHODE NOT PROTECTED BY THE PROTECTIVE PHOTORESIST
318
DEPOSIT AN ENCAPSULATION LAYER OVER THE SUBSTRATE

FIG. 3

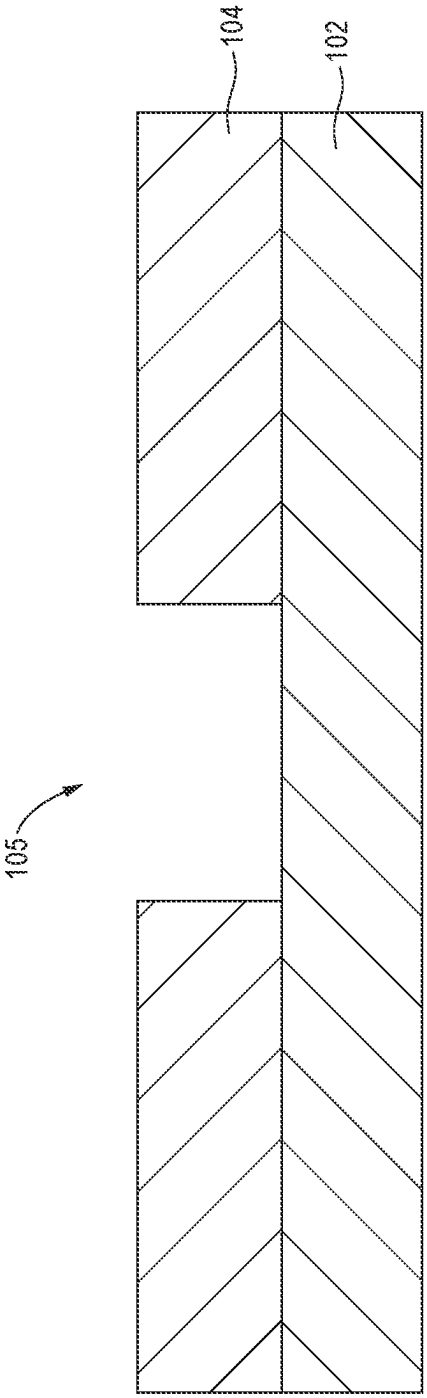

FIG. 4A

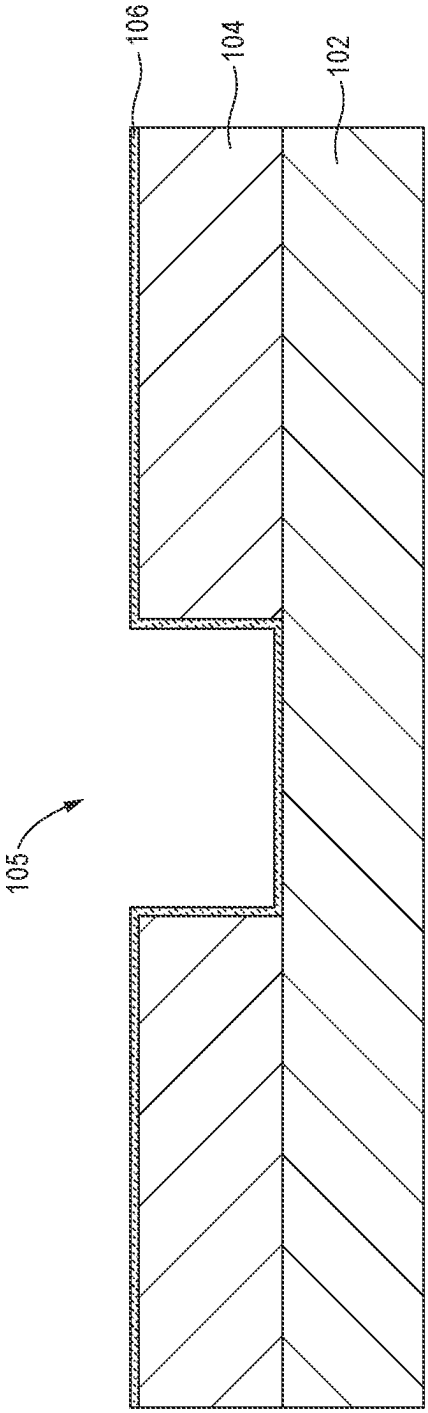

FIG. 4B

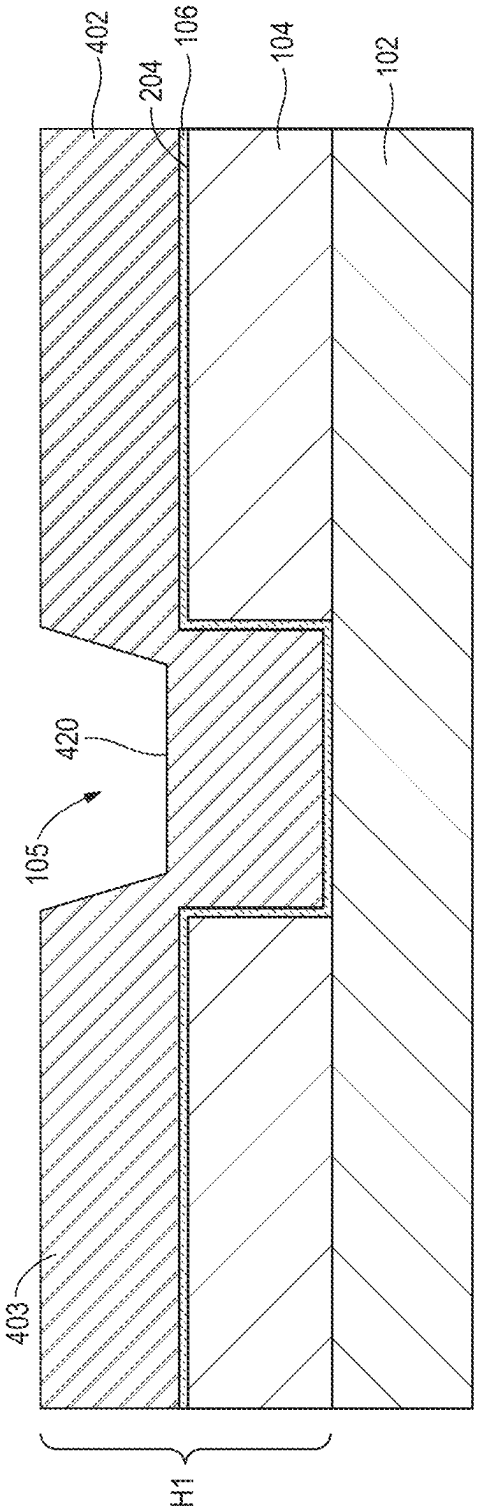

FIG. 4C

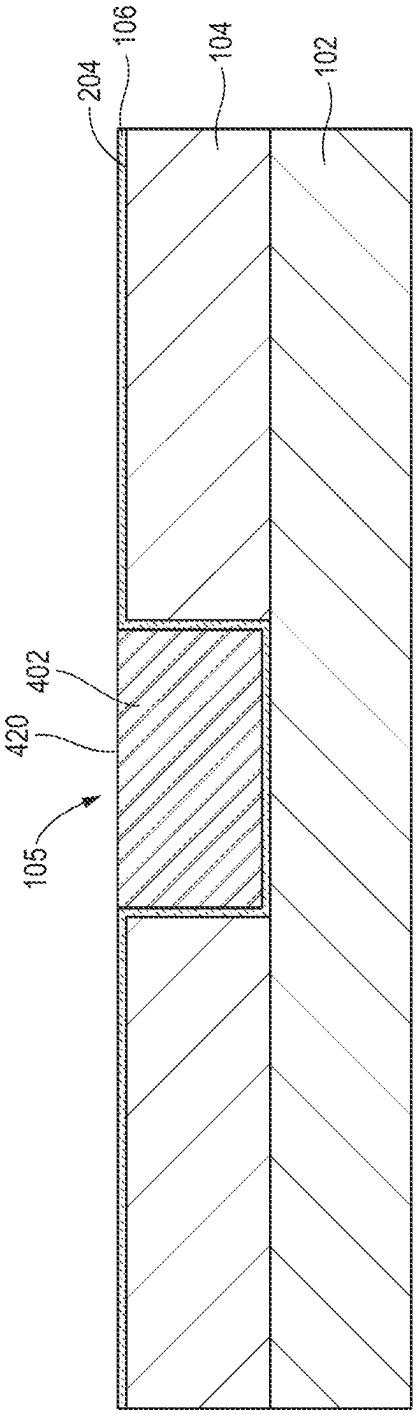

FIG. 4D

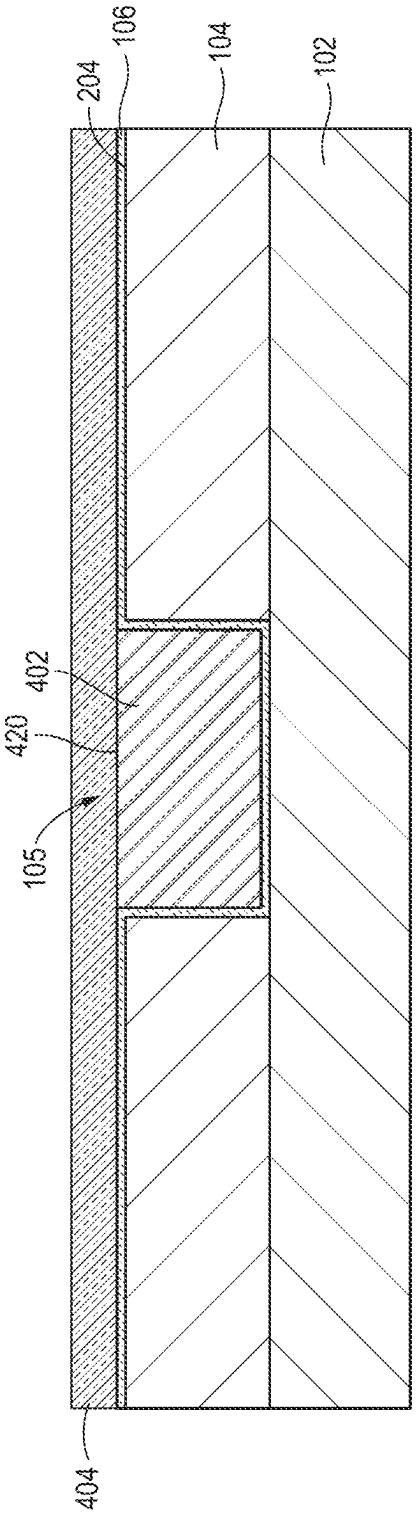
204
106
104
102
402
420
105
404

FIG. 4E

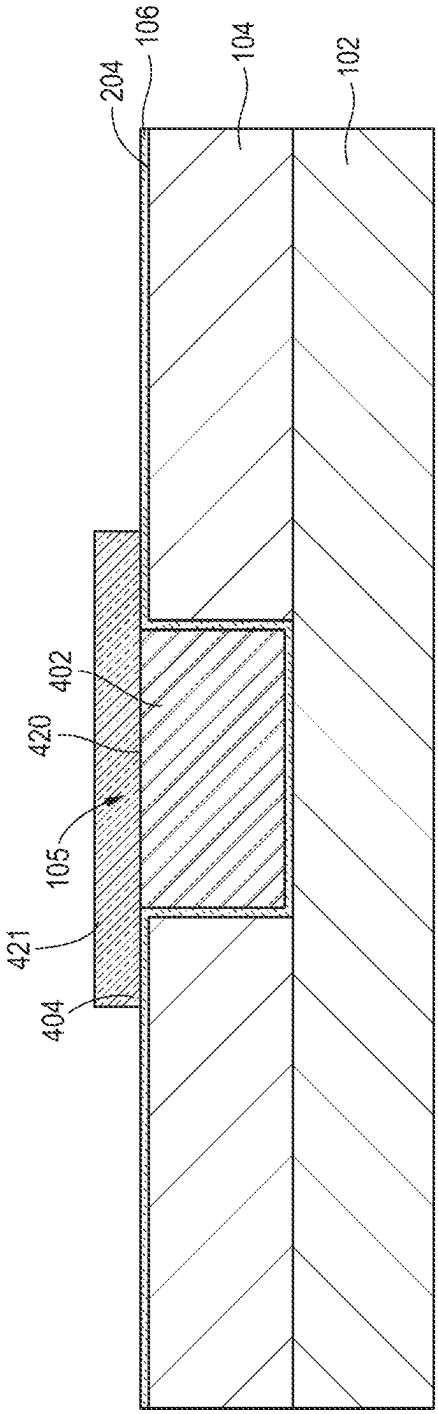
204
106
104
102
402
420
105
421
404

FIG. 4F

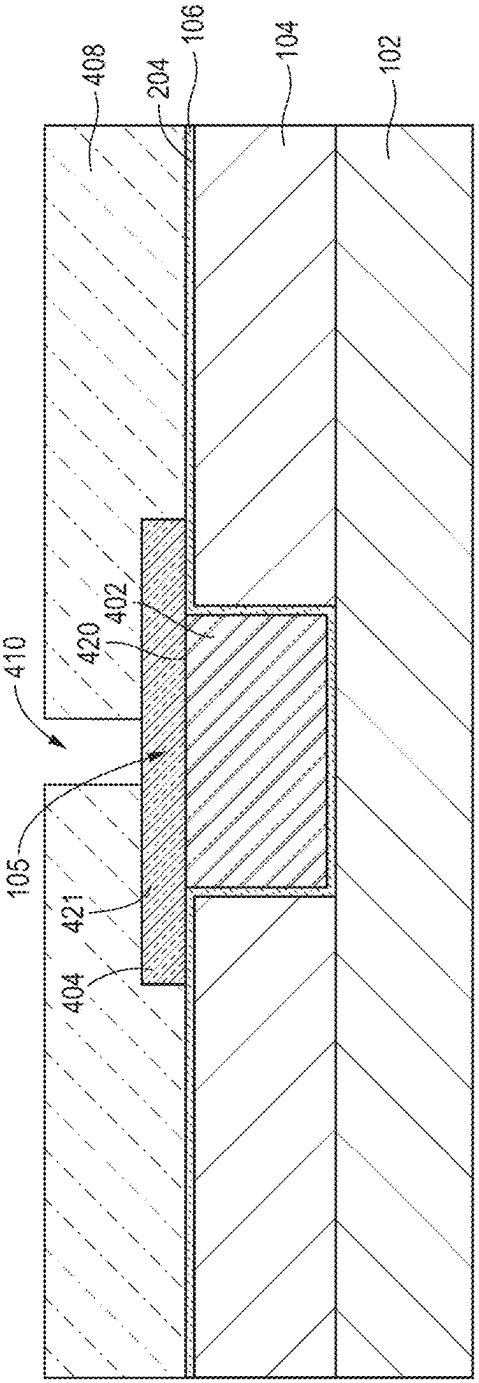
408
204
106
104
102
410
420
402
105
421
404

FIG. 4G

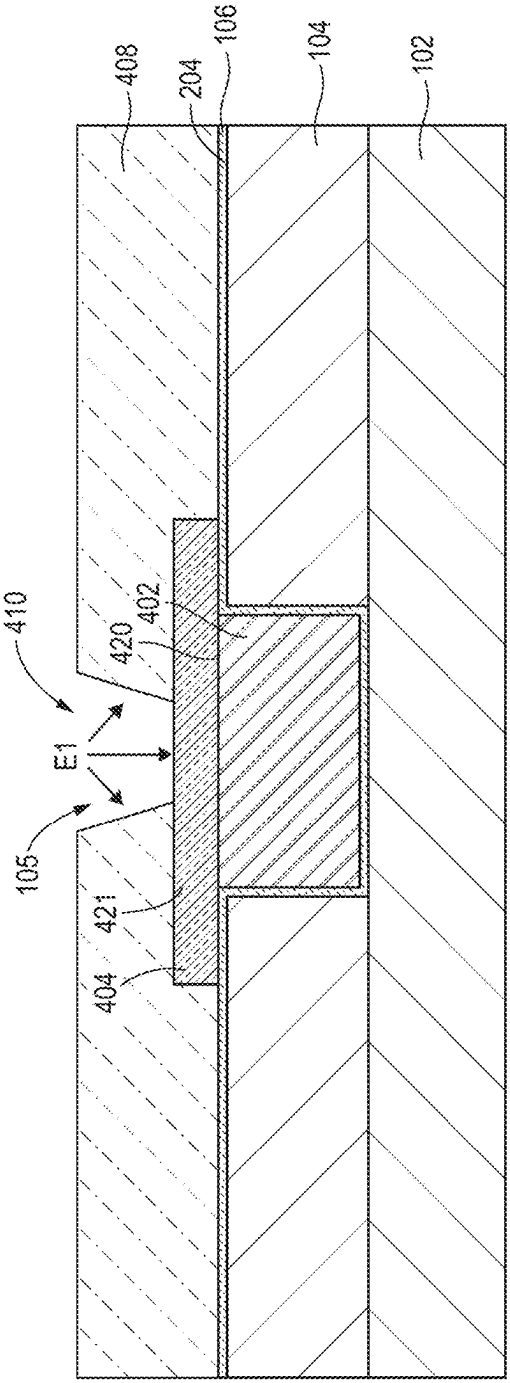
408
204
106
104
102
410
420
402
E1
105
421
404

FIG. 4H

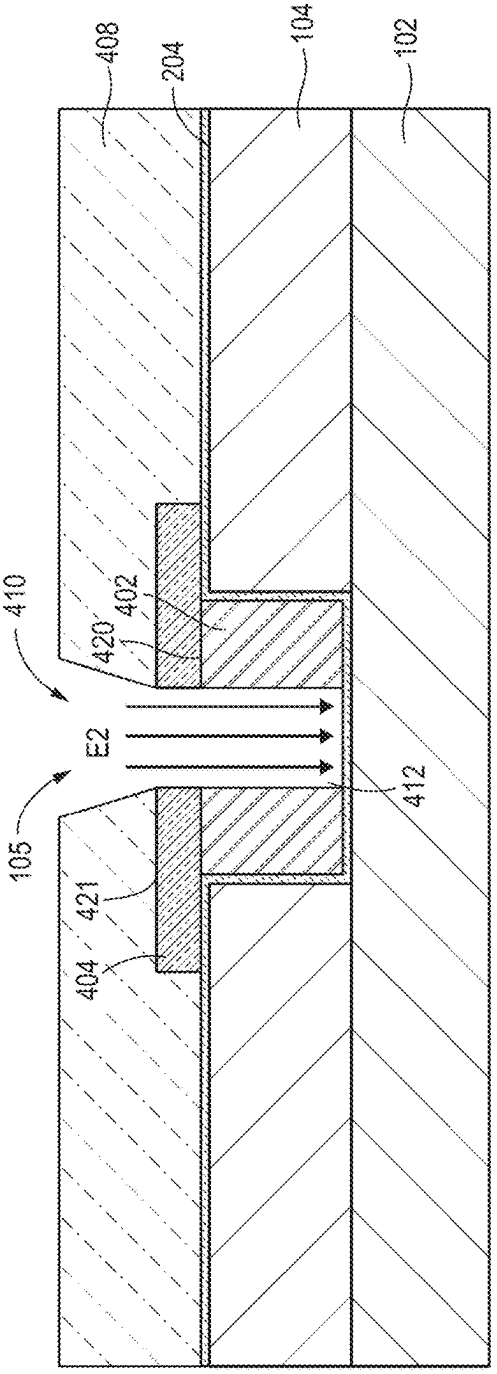
408
204
104
102
410
420
402
E2
105
421
404
412

FIG. 4I

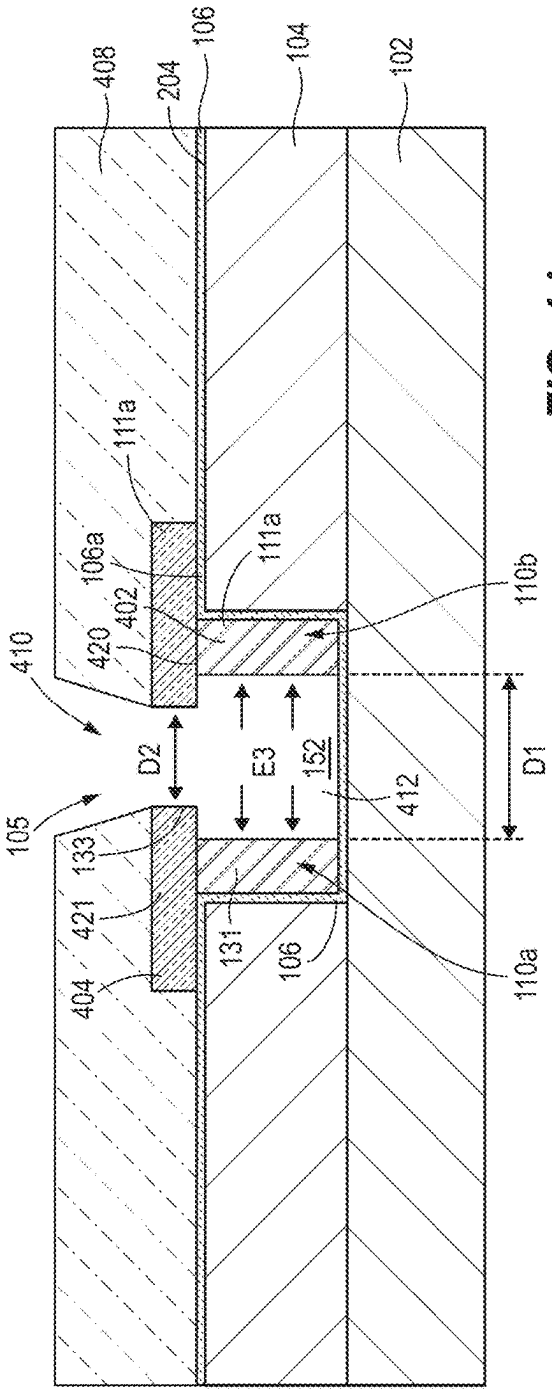
408
204
106
104
102
111a
106a
111a
110b
410
420
402
D2
E3
152
D1
412
105
133
421
131
106
110a
404

FIG. 4J

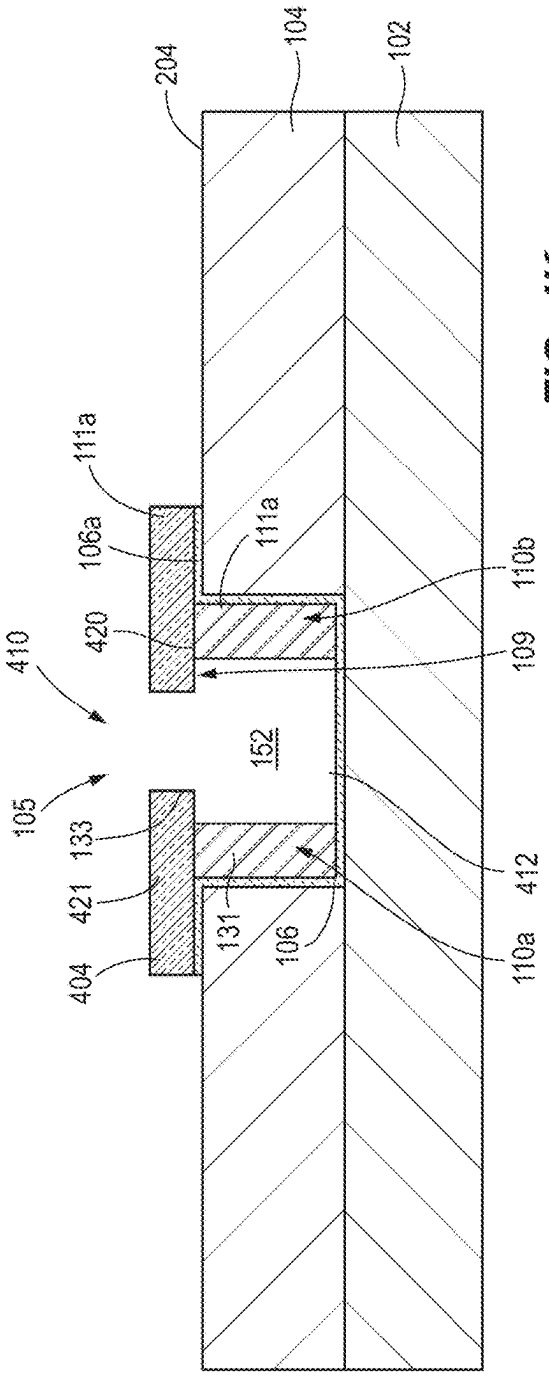
204
104
102
111a
106a
111a
110b
420
410
109
152
105
133
412
421
131
106
110a
404

FIG. 4K

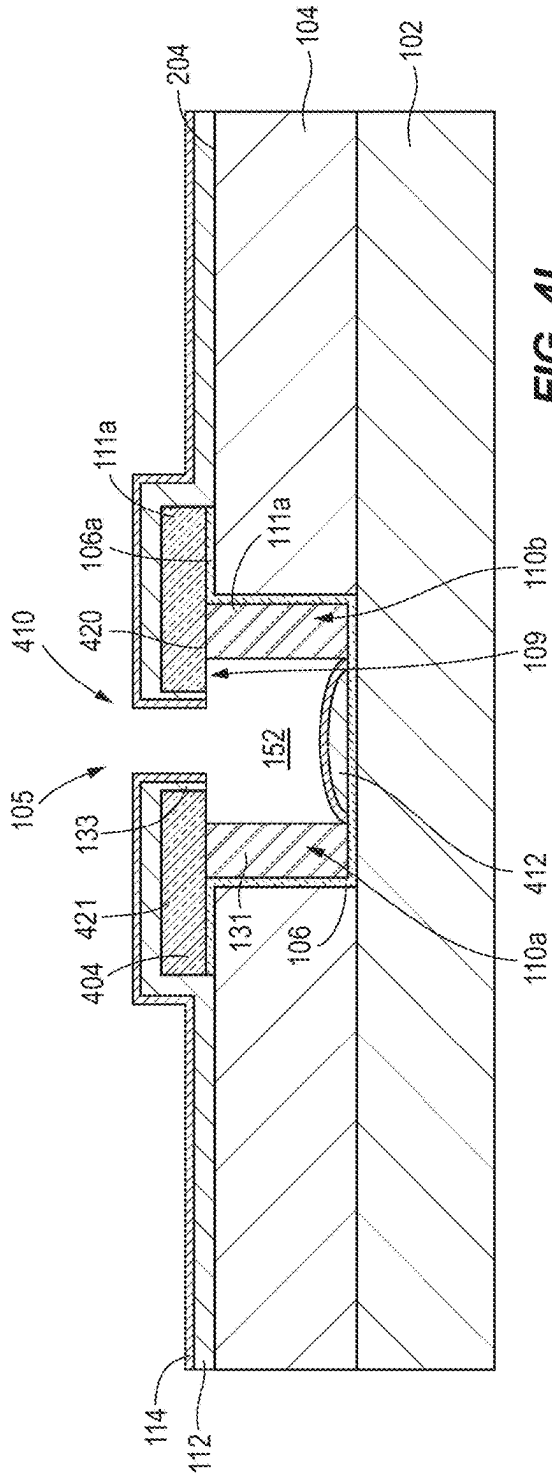
204
104
102
111a
106a
111a
110b
420
410
109
152
105
133
412
421
131
106
110a
404
114
112

FIG. 4L

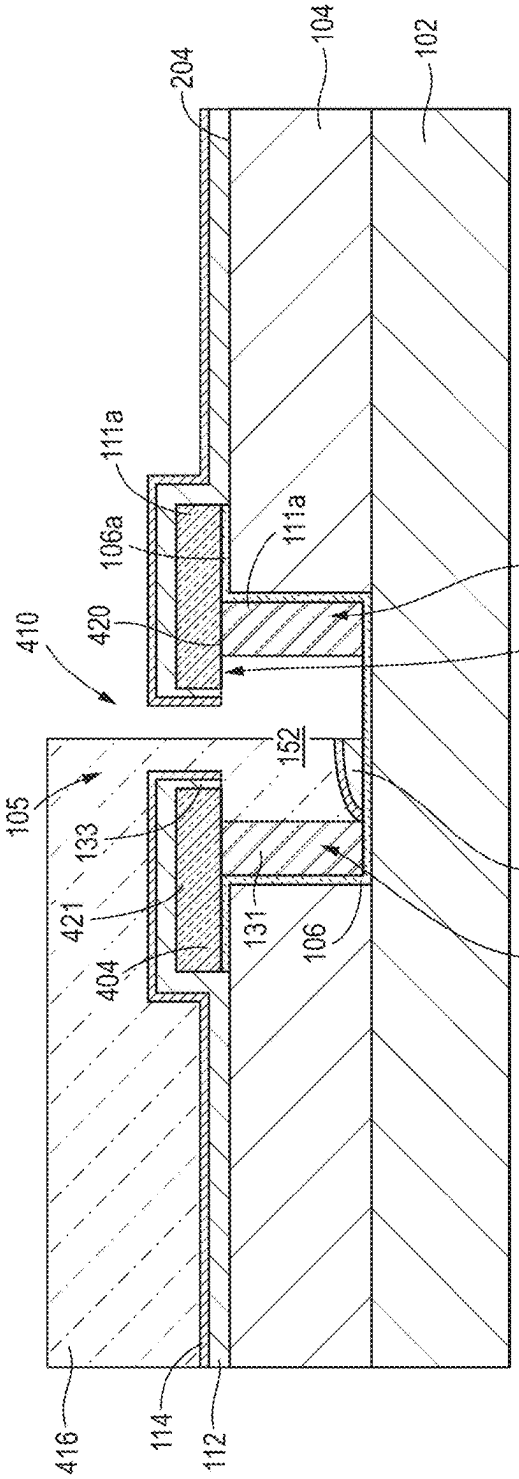
204
104
102
111a
106a
111a
110b
420
410
109
152
105
133
412
421
131
106
110a
404
416
114
112

FIG. 4M

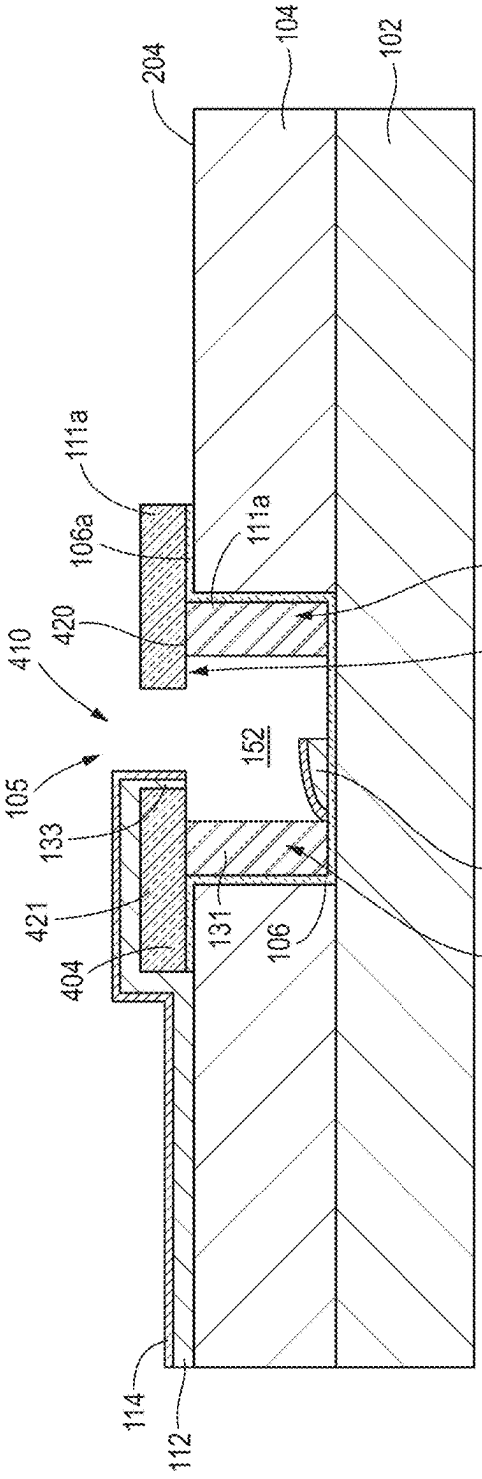
204
104
102
111a
106a
111a
110b
420
410
109
152
105
133
412
421
131
106
110a
404
114
112

FIG. 4N

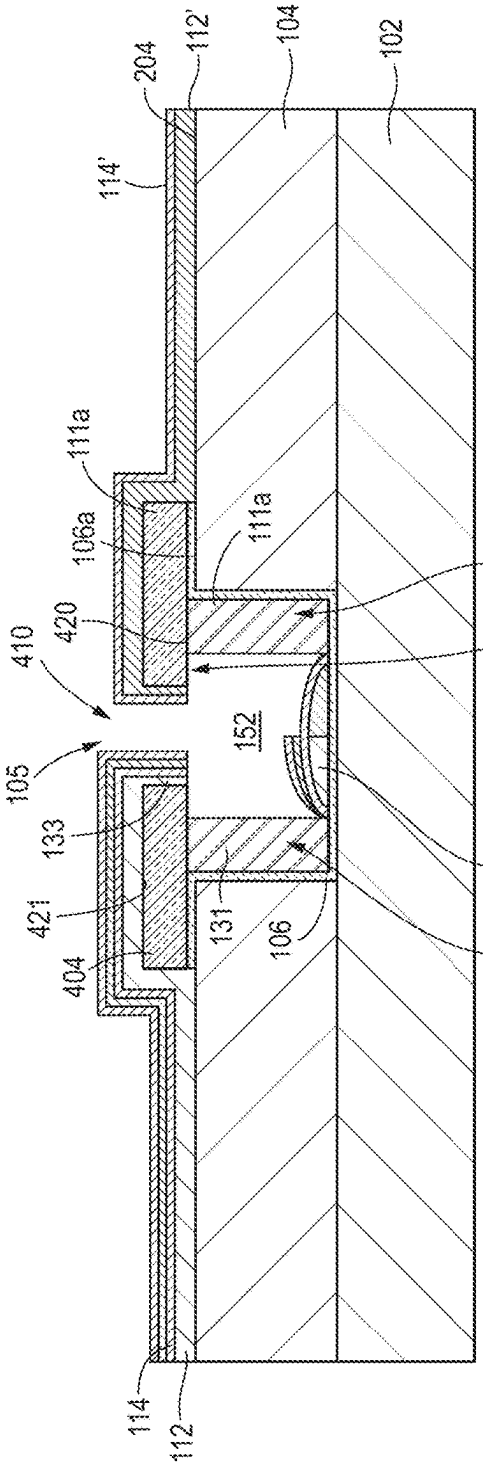
204
112'
104
102
114'
111a
106a
111a
110b
420
410
109
152
105
133
412
421
131
106
110a
404
114
112

FIG. 4O

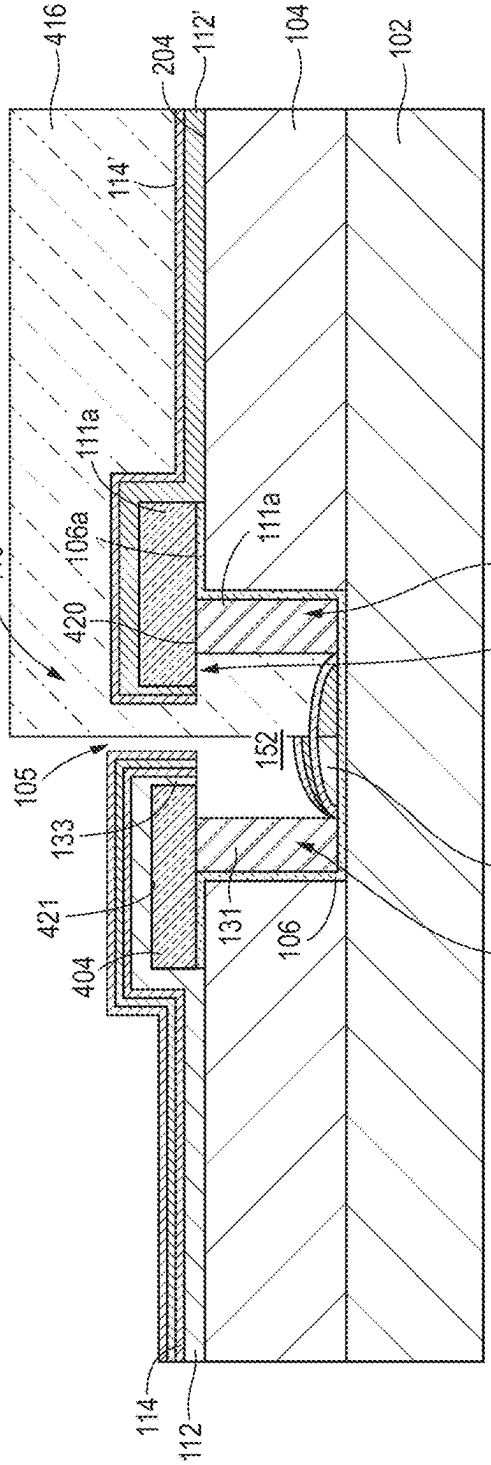
416
204
112'
104
102
114'
111a
106a
111a
110b
410
420
109
152
105
133
412
421
131
106
110a
404
114
112

FIG. 4P

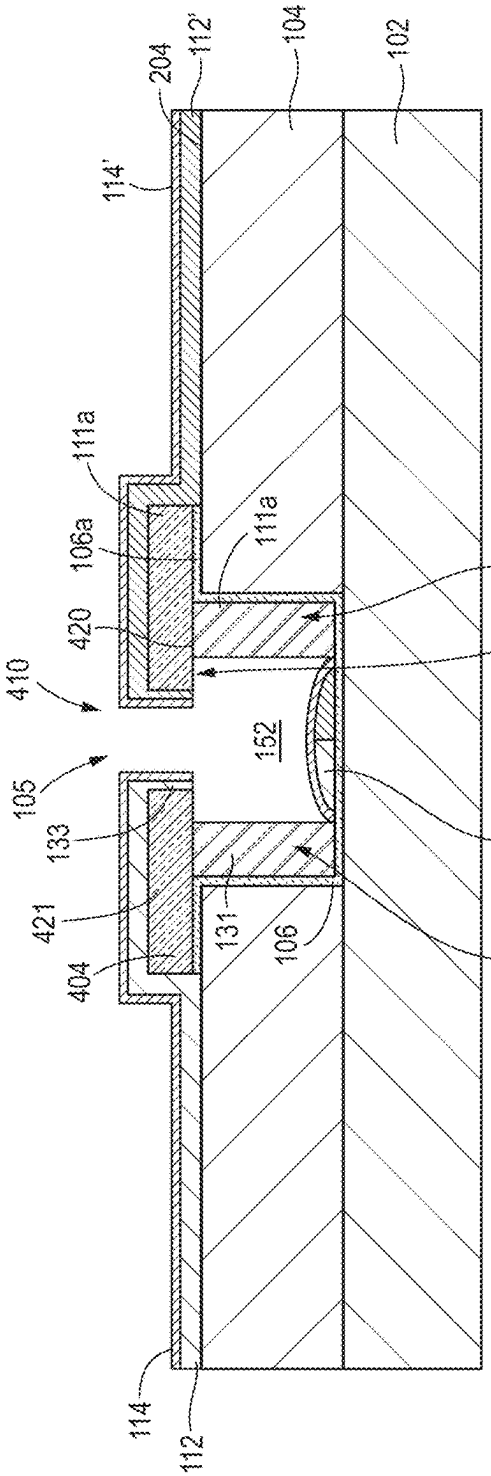
204
112'
104
102
114'
111a
106a
111a
110b
420
109
410
152
105
133
412
421
131
106
110a
404
114
112

FIG. 4Q

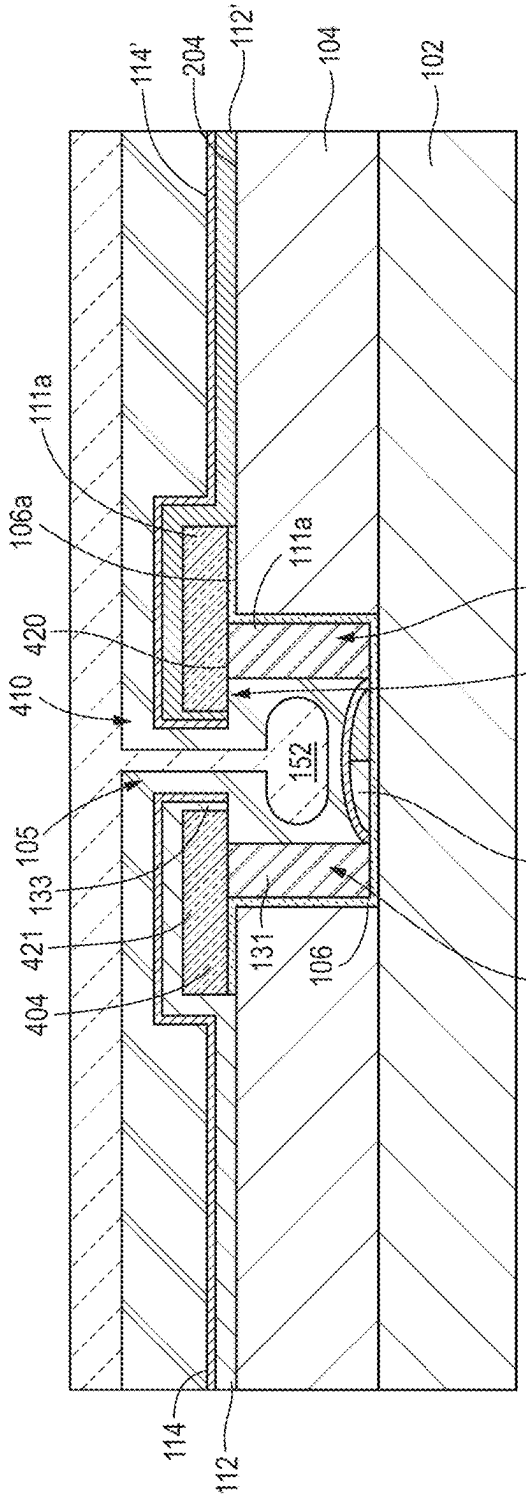
114'
204
112'
104
102
111a
106a
111a
110b
420
109
410
152
105
133
412
421
131
106
110a
404
114
112

FIG. 4R

HIGH RESOLUTION ADVANCED OLED SUB-PIXEL CIRCUIT

CROSS-REFERENCE TO RELATED APPLICATIONS

This application claims priority to United States Provisional Patent Application 63/675,171, filed on Jul. 24, 2024, and U.S. patent application Ser. No. 18/746,747, filed on Jun. 18, 2024 which claims priority to U.S. Provisional Patent Application Ser. No. 63/608,038, filed Dec. 8, 2023, and U.S. Provisional Patent Application Ser. No. 63/645,409, filed May 10, 2024 the contents of which are incorporated herein by reference.

BACKGROUND

Field

Embodiments described herein generally relate to a display. More specifically, embodiments described herein relate to sub-pixel circuits and methods of forming sub-pixel circuits that may be utilized in a display such as an organic light-emitting diode (OLED) display.

Description of the Related Art

Input devices including display devices may be used in a variety of electronic systems. An organic light-emitting diode (OLED) is a light-emitting diode (LED) in which the emissive electroluminescent layer is a film of an organic compound that emits light in response to an electric current. OLED devices are classified as bottom emission devices if light emitted passes through the transparent or semi-transparent bottom electrode and substrate on which the panel was manufactured. Top emission devices are classified based on whether or not the light emitted from the OLED device exits through the lid that is added following the fabrication of the device. OLEDs are used to create display devices in many electronics today. Today's electronics manufacturers are pushing these display devices to shrink in size while providing higher resolution, i.e., pixel-per-inch, than just a few years ago.

OLED pixel patterning is currently based on a process that restricts panel size, pixel resolution, and substrate size. Rather than utilizing a fine metal mask, photo lithography should be used to pattern pixels. Currently, OLED pixel patterning requires lifting off organic material after the patterning process. When lifted off, the organic material leaves behind a particle issue that disrupts OLED performance.

Accordingly, what is needed in the art are sub-pixel circuits and methods of forming sub-pixel circuits to increase pixel-per-inch and provide improved OLED performance.

SUMMARY

Embodiments described herein generally relate to a display. More specifically, embodiments described herein relate to sub-pixel circuits and methods of forming sub-pixel circuits that may be utilized in a display such as an organic light-emitting diode (OLED) display.

In one or more embodiments, a sub-pixel circuit includes at least two anodes disposed over a substrate, with adjacent anodes defining a well. The sub-pixel circuit further includes adjacent overhang structures. The overhang structures include a first portion disposed in the well and a second portion disposed over the first portion, and a portion of the uppermost surface of the anode. The second portion includes overhang extensions extending past lower sidewalls of the first portion, and an upper surface. The upper surface of the second portion is above the uppermost surface of the anodes. The well has a trench area defined by the lower sidewalls and a bottom surface of the overhang extensions with a gap between the overhang extensions of the adjacent overhang structures. The sub pixel circuit further includes an organic light emitting diode (OLED) material, a cathode, and an encapsulation layer.

In one or more embodiments, a device includes a first sub-pixel and a second sub-pixel each including anodes disposed over a substrate. The anodes include an uppermost surface. Each sub-pixel further includes a plurality of overhang structures disposed over the substrate alongside opposite sidewalls of the anodes. The plurality of overhang structures include a first portion comprising a first material. The first portion further includes a lower sidewall. A second portion is disposed over the first portion and a portion of the uppermost surface of the anodes. The second portion includes a second material. The second portion further includes an overhang extension that extends past the lower sidewall. The lower sidewall of the first portion and a bottom surface of the overhang extension of the second portion partially define a trench area. Each sub-pixel further includes an organic light emitting diode (OLED) material.

In one or more embodiments, a sub-pixel circuit includes a plurality of anodes disposed over a substrate, with adjacent anodes defining a well. The sub-pixel circuit further includes adjacent overhang structures. The overhang structures include a first portion disposed in the well and a second portion disposed over the first portion and a portion of the uppermost surface of the anode. The second portion includes overhang extensions that extend past lower sidewalls of the first portion. The well has a trench area defined by the lower sidewalls and a bottom surface of the overhang extensions with a gap between the overhang extensions of the adjacent overhang structures. The sub-pixel circuit further includes an organic light emitting diode (OLED) material.

BRIEF DESCRIPTION OF THE DRAWINGS

So that the manner in which the above recited features of the present disclosure can be understood in detail, a more particular description of the disclosure, briefly summarized above, may be had by reference to embodiments, some of which are illustrated in the appended drawings. It is to be noted, however, that the appended drawings illustrate only exemplary embodiments and are therefore not to be considered limiting of its scope, and may admit to other equally effective embodiments.

FIG. **1**A is a schematic, cross-sectional view of a sub-pixel circuit at section line **1**A-**1**A according to embodiments.

FIG. **1**B is a schematic, cross-sectional view of a sub-pixel circuit at section line **1**B-**1**B according to embodiments.

FIG. **1**C is a schematic, cross-sectional view of a sub-pixel circuit having a line-type architecture according to embodiments.

FIG. **2** is a schematic, cross-sectional view of an overhang structure according to embodiments.

FIG. **3** is a flow diagram of a method for forming a sub-pixel according to according to embodiments.

FIGS. 4A-4R are schematic, cross-sectional views of a substrate during a method of forming a sub-pixel according to embodiments.

To facilitate understanding, identical reference numerals have been used, where possible, to designate identical elements that are common to the figures. It is contemplated that elements disclosed in one embodiment may be beneficially utilized on other embodiments without specific recitation.

DETAILED DESCRIPTION

Embodiments described herein generally relate to a display. More specifically, embodiments described herein relate to sub-pixel circuits and methods of forming sub-pixel circuits that may be utilized in a display such as an organic light-emitting diode (OLED) display. In various embodiments, the sub-pixels employ advanced overhang structures to improve functionality of the display.

In one embodiment, a sub-pixel is provided. The sub-pixel includes an anode, overhang structures, separation structures, an organic light emitting diode (OLED) material, and a cathode. The anode is defined by a raised metal structure formed over a substrate. The overhang structures, in some embodiments, are disposed on a protective layer within a well in-between the anodes along a pixel plane. The overhang structures include a second overhang portion disposed over a first overhang portion. The second overhang portion may be disposed on the first overhang portion. I.e., the second overhang portion has an extension that extends past a lower sidewall of the first overhang portion. E.g., a bottom surface of the second portion extends laterally past the lower sidewall of the first portion. In embodiments with the protective layer, the first portion is disposed on the protective layer. The first portion has a lower sidewall. The second portion has an upper sidewall. The upper sidewall extends past the lower sidewall. The second portion and the first portion include different compositions.

In some embodiments, the different compositions of the second portion and the first portion results in different etch rates such that the second portion has an extension that extends past a lower sidewall of the first portion as described herein. The separation structures are disposed on a protective layer in-between the anodes along a line plane. The separation structures include a second layer disposed over a first layer. The first layer includes an upper surface. The upper surface of the first layer is coplanar to an upper surface of the protective layer disposed over the anode. The second layer of the separation structure is disposed over the first layer. The second layer extends over at least a portion of the protective layer disposed over the anode. In one or more embodiments, the second layer extends past the protective layer disposed over the anode. The second layer of the separation structure is formed of a material having the same composition as the second portion of the overhang structure. The first layer of the separation structure is formed of a material having the same composition as the first portion of the overhang structure. The first layer and the second layer of the separation structure include different compositions. In some embodiments, the different compositions of the second layer and the first layer results in different etch rates. The OLED material is disposed over the anode, an upper surface of the overhang structures, the upper sidewall of the overhang structures, within the trench area, and an upper surface of the separation structures. In embodiments with the protective layer, the OLED material is disposed over the protective layer within the well, and an upper portion of the protective layer disposed over the anode. The cathode disposed over the OLED material.

In another embodiment, a device is disclosed. The device includes a plurality of sub-pixel lines. Each sub-pixel line includes at least a first sub-pixel and a second sub-pixel. The first sub-pixel and the second sub-pixel each include an anode, overhang structures, separation structures, an organic light emitting diode (OLED) material, and a cathode. The anode is defined by a raised metal structure formed over a substrate. The overhang structures are disposed on a protective layer within a well in-between the anodes, along opposite sidewalls of the anodes along a pixel plane. The overhang structures include a second portion disposed over the first portion. The second portion may be disposed on the first portion. I.e., the second portion has an extension that extends past a lower sidewall of the first portion. E.g., a bottom surface of the second portion extends laterally past the lower sidewall of the first portion. In embodiments with the protective layer, the first portion is disposed on the protective layer. The first portion has a lower sidewall. The second portion has an upper sidewall. The upper sidewall extends past the lower sidewall. The second portion and the first portion include different compositions.

In some embodiments, the different compositions of the second portion and the first portion results is different etch rates such that the second portion has an extension that extends past a lower sidewall of the first portion as described herein. The separation structures are disposed on a protective layer in-between the anodes along a line plane. The separation structures include a second layer disposed over a first layer. The first layer includes an upper surface. The upper surface of the first layer is coplanar to an upper surface of the protective layer disposed over the anode. The second layer of the separation structure is disposed over the first layer. The second layer extends over at least a portion of the protective layer disposed over the anode. In one or more embodiments, the second layer extends past the protective layer disposed over the anode. The second layer of the separation structure is formed of a material having the same composition as the second portion of the overhang structure. The first layer of the separation structure is formed of a material having the same composition as the first portion of the overhang structure. The first layer and the second layer of the separation structure include different compositions. In some embodiments, the different compositions of the second layer and the first layer results in different etch rates. The OLED material is disposed over the anode, an upper surface of the overhang structures, the upper sidewall of the overhang structures, within the trench area, and an upper surface of the separation structures. In embodiments with the protective layer, the OLED material is disposed over the protective layer within the well, and an upper portion of the protective layer disposed over the anode. The cathode disposed over the OLED material.

Each of the embodiments described herein of the sub-pixel circuit include a plurality of sub-pixels with each of the sub-pixels are defined by adjacent overhang structures that are permanent to the sub-pixel circuit. While the Figures depict two sub-pixels or three sub-pixels with each sub-pixel defined by adjacent overhang structures, the sub-pixel circuit of the embodiments described herein include a plurality of sub-pixels, such as two or more subpixels. Each sub-pixel has OLED materials configured to emit a white, red, green, blue or other color light when energized. E.g., the OLED materials of a first sub-pixel emits a red light when energized, the OLED materials of a second sub-pixel emits a

green light when energized, and the OLED materials of a third sub-pixel emits a blue light when energized.

The overhangs are permanent to the sub-pixel circuit and include at least a second portion disposed over a first portion. The overhang structures defining each sub-pixel of the sub-pixel circuit of the display provide for formation of the sub-pixel circuit using evaporation deposition and provide for the overhang structures to remain in place after the sub-pixel circuit is formed. Evaporation deposition is utilized for deposition of OLED materials (including a hole injection layer (HIL), a hole transport layer (HTL), an emissive layer (EML), and an electron transport layer (ETL)) and cathode. In some instances, an encapsulation layer may be disposed via evaporation deposition. The overhang structures and the evaporation angle set by the evaporation source define the deposition angles, i.e., the overhang structures provide for a shadowing effect during evaporation deposition with the evaporation angle set by the evaporation source. In order to deposit at a particular angle, the evaporation source is configured to emit the deposition material at a particular angle with regard to the overhang structure. The encapsulation layer of a respective subpixel is disposed over the cathode with the encapsulation layer extending under at least a portion of each of the adjacent overhang structures and along a sidewall of each of the adjacent overhang structures.

FIG. **1**A is a schematic, cross-sectional view of a sub-pixel circuit **100**, according to one or more embodiments. The cross-sectional view of FIG. **1**A is taken along section line **1**A-**1**A of FIG. **1**C (e.g., a pixel plane). FIG. **1**B is a schematic, cross-sectional view of a sub-pixel circuit **100** according to embodiments. The cross-sectional view of FIG. **1**B is taken along section line **1**B-**1**B of FIG. **1**C (e.g., a line plane). The sub-pixel circuit **100** includes a substrate **102**. In one or more embodiments, the substrate **102** is a backplane. The backplane includes, but is not limited to, a complementary metal-oxide-semiconductor (CMOS) array or a thin-film transistor (TFT) array. Metal-containing structures (e.g., anodes **104**) are patterned over the substrate **102**. In some embodiments, each of the anodes **104** include a monolithic structure **104***a* disposed over an upper surface of the substrate **102**. The material of the monolithic structure **104***a* of the anode **104** includes titanium (Ti). In other embodiments, the anode **104** includes of at least three anode layers, as shown in FIG. **1**A. The anodes **104** of the entire sub-pixel circuit **100** can include either the monolithic structure embodiment or the three anode layers embodiment. In the three anode layers embodiment, a first anode layer **104***b* formed over the upper surface of the substrate **102**. The first anode layer **104***b* includes of an aluminum copper alloy (AlCu) containing material. A second anode layer **104***c* is formed over the first anode layer **104***b*. The second anode layer **104***c* includes a titanium nitride (TiN) containing material. A third anode layer **104***d* includes the second anode layer **104***c*. The third anode layer **104***d* is formed of a transparent conductive oxide (TCO) material. It should be understood that for illustrative purposes most of the figures in the present disclosure represent the anode **104** as a monolithic structure including a single layer. However, the anode **104** can include any number of layers including but not limited to the embodiments described above. The total thickness, i.e, anode thickness H4, of the anode **104** is about 200 nm to about 400 nm, such as a total thickness of about 300 nm. It is contemplated that the anodes **104** may by formed either directly on the top surface of the substrate or over a top surface the base layer. The anodes **104** are configured to operate as anodes of respective sub-pixels.

A protective layer **106** may be disposed over the substrate **102** and/or at least a portion of the anodes **104**. The protective layer **106** may be formed along both the pixel plane and the line plane. The protective layer **106** may be disposed over the substrate **102** in between the adjacent anodes **104** along both the pixel plane and the line plane. The protective layer **106** may extend from the upper surface of the substrate **102**, along a sidewall of the anode **104**, to the uppermost surface **204** of the anode **104**. An upper portion **106***a* of the protective layer **106** contacts at least a portion of the uppermost surface **204** of the anode near the sidewalls of the anode **104**. The upper portion **106***a* of the protective layer **106** extends along both the pixel plane and the line plane. The protective layer **106** is formed of a material including aluminum oxide (Al_2O_3). The protective layer is about 10 nm to about 50 nm, such as a thickness of about 20 nm.

The sub-pixel circuit **100** has a plurality of sub-pixel lines (e.g., first sub-pixel line **107**A, second sub-pixel line **107**B, and third sub-pixel line **107**C). The sub-pixel lines are adjacent to each other along the pixel plane. Each sub-pixel line includes at least two sub-pixels. E.g., the first sub-pixel line **107**A includes a first sub-pixel **108**A and a second sub-pixel **108**B, the second sub-pixel line **107**B includes a third sub-pixel **108**C and a fourth sub-pixel **108**D, and the third sub-pixel line **107**C includes a fifth sub-pixel **108**E and a sixth sub-pixel **108**F. The first sub-pixel **108**A and the second sub-pixel **108**B are aligned along the line plane. The first sub-pixel **108**A, the third sub-pixel **108**C, and the fifth sub-pixel **108**E are aligned in the pixel plane. While FIG. **1**A depicts the first sub-pixel line **107**A, the second sub-pixel line **107**B, and the third sub-pixel line **107**C, the sub-pixel circuit **100** of the embodiments described herein may additional sub-pixel lines such as a fourth sub-pixel line. Each sub-pixel line has OLED materials configured to emit a white, red, green, blue or other color light when energized. E.g., the OLED materials of the first sub-pixel line **107**A emits a red light when energized, the OLED materials of the second sub-pixel line **107**B emits a green light when energized, the OLED materials of the third sub-pixel line **107**C emits a blue light when energized, and the OLED materials of a fourth sub-pixel emits another color light when energized. The OLED materials within a sub-pixel line may be configured to emit the same color light when energized. E.g., the OLED materials of the first sub-pixel **108**A and the second sub-pixel **108**B of the first sub-pixel line **107**A emit a red light when energized and the OLED materials of the third sub-pixel **108**C and the fourth sub-pixel **108**D of the second sub-pixel line **107**B emit a green light when energized.

Adjacent sub-pixel lines are divided by an opening **115** of a well **105** that extends along the line plane in-between the anodes **104** of adjacent sub-pixel lines. For example, FIG. **1**A illustrates sub-pixel circuit **100** including a first well **105**A and a second well **105**B. The first well **105**A is defined by the anodes **104** of the first sub-pixel **108**A and the second sub-pixel **108**B of first sub-pixel line **107**A, and the anodes **104** of the third sub-pixel **108**C and the fourth sub-pixel **108**D of the second sub-pixel line **107**B. The opening **115** of the first well **105**A divides the first sub-pixel line **107**A and the second sub-pixel line **107**B. The second well **105**B is defined by the anodes **104** of the third sub-pixel **108**C and the fourth sub-pixel **108**D of second sub-pixel line **107**B, and the anodes **104** of the fifth sub-pixel **108**E and the sixth sub-pixel **108**F of the third sub-pixel line **107**C. The opening **115** of the second well **105**B divides the second sub-pixel line **107**B and the third sub-pixel line **107**C.

Each sub-pixel line includes a two overhang structures **110** extending along the line plane, disposed within the wells **105**, on along opposite sidewalls of the anodes **104** within a sub-pixel line. For example, the second sub-pixel line **107**B includes a second overhang structure **110***b* and a third overhang structure **110***c* disposed alongside opposites sidewalls of the anodes **104** of the third sub-pixel **108**C and the fourth sub-pixel **108**D. Each well **105** includes a plurality of adjacent overhang structures **110** extending throughout the line plane along the portion of the sub-pixel line within the well. For example, the first well **105**A includes a first overhang structure **110***a* and a second overhang structure **110***b*. A portion of first overhang structure **110***a* extends though the line plane, along a portion the first sub-pixel line **107**A within the first well **105**A, and a portion of the second overhang structure **110***b* extends through the line plane along a portion of the second sub-pixel line **107**B within the first well **105**A. The second well **105**B includes a third overhang structure **110***c* and a fourth overhang structure **110***d*. A portion of the third overhang structure **110***c* extends though the line plane, along a portion the second sub-pixel line **107**B within the second well **105**B, and a portion of the fourth overhang structure **110***d* extends through the line plane along a portion of the third sub-pixel line **107**C within the second well **105**B. An upper sidewall **133** of a second portion **111***b* of the adjacent overhang structures **110** within a well **105** define the opening **115** into the well **105**.

Each overhang structure **110** includes a first portion **111***a*, and a second portion **111***b*. The first portion **111***a* may be disposed on the protective layer **106** along the sidewalls of the anodes **104** of the respective sub-pixel line. The first portion **111***a* includes a first material having a first composition. The first composition includes silicon (Si), silicon nitride (Si_3N_4), silicon oxide (SiO_2), or combinations thereof. The first portion includes a lower sidewall **131**. The second portion **111***b* is disposed over an upper surface **123** of the first portion **111***a* and the upper portion **106***a* of the protective layer **106**. In one or more embodiments the second portion **111***b* extends over a portion of the upper portion **106***a* of the protective layer **106**. In one or more embodiments, the second portion **111***b* extends past the upper portion **106***a* of the protective layer **106** and onto the uppermost surface **204** of the anode **104**. The second portion **111***b* includes a second material having a second composition. The first composition and the second composition are different from one another. The second composition includes silicon (Si), silicon nitride (Si_3N_4), silicon oxide (SiO_2), or combinations thereof. The first composition and the second composition have different etch rates when exposed to etch chemistries. A lower surface **113** of the second portion **111***b* extends past the lower sidewall **131** of the first portion **111***a* to form the overhang extension **109**. The overhang extension **109** of the second portion **111***b* allows for the second portion **111***b* to shadow the first portion **111***a*. In one or more embodiments, the lower surface **113** of the second portion **111***b* contacts the upper portion **106***a* of the protective layer **106** and an upper surface **123** of the first portion **111***a*. The upper surface **123** of the first portion **111***a* and the upper portion **106***a* of the protective layer are coplanar. An upper surface **124** of the second portion **111***b* is above the upper surface **123** of the first portion **111***a* and the upper portion **106***a* of the protective layer **106**. The lower sidewalls **131** and the lower surface **113** of the overhang extensions **109** of the adjacent overhang structures **110** within the well **105**A, **105**B at least partially define a trench area **152**. The lower sidewalls **131** of the adjacent overhang structures **110** within a well **105** are separated by a distance D1. The upper sidewalls **133** of the adjacent overhang structures **110** within a well **105** are separated by a distance D2.

Each sub-pixel line includes an OLED material **112** and a cathode **114** disposed over the anode **104** and the overhang structures **110**. The OLED material **112** may include one or more of a HIL, a HTL, an EML, and an ETL. The OLED material **112** is disposed over and in contact with the uppermost surface **204** of the anodes **104** within a sub-pixel line. In one or more embodiments, the OLED material **112** may be disposed over the upper portion **106***a* of the protective layer **106**. Furthermore, OLED material **112** is disposed over the upper surface **124** of the second portion **111***b*. The OLED material **112** is disposed within at least a portion the trench area **152** not shadowed by the overhang extensions **109**. Additionally, a thin layer of the OLED material **112** may be disposed over the upper sidewall **133** of the second portion **111***b*. The thin layer of the OLED material **112** may also be disposed within a portion of the trench area **152** shadowed by the overhang extensions **109**. In one embodiment, the OLED material **112** is different from the first composition of the first portion **111***a* and the second composition of the second portion **111***b*. The cathode **114** is disposed over the OLED material **112**. The thickness of the OLED material **112** and the cathode **114** are described in greater detail in FIG. **2**.

The cathode **114** includes a conductive material, such as a metal. E.g., the cathode **114** includes, but is not limited to, silver, magnesium, chromium, titanium, aluminum, ITO, or a combination thereof. In one or more embodiments, material of the cathode **114** is different from the material of the first portion **111***a*. In one or more embodiments, the material of the cathode is different from the material of the second portion **111***b*.

The sub-pixel circuit **100** includes an encapsulation layer **116**. The encapsulation layer **116** may be or may correspond to a local passivation layer. The encapsulation layer **116** of a respective sub-pixel is disposed over the cathode **114** (and OLED material **112**) within the trench area **152**, with the encapsulation layer **116** extending under at least a portion of each of the overhang extensions **109** and along the lower sidewall **131** of each of the overhang structures **110**. The encapsulation layer **116** is disposed over the cathode **114** and over at least the lower sidewall **131**. In some embodiments, which can be combined with other embodiments described herein, the encapsulation layer **116** is disposed over the upper sidewall **133**. In some embodiments, which can be combined with other embodiments described herein, the encapsulation layer **116** is disposed over the upper surface **124** of the second portion **111***b*. The encapsulation layer **116** includes the non-conductive inorganic material, such as the silicon-containing material. The silicon-containing material may include Si_3N_4 containing materials.

In one or more embodiments, as shown in FIGS. **1**A and **1**B, the encapsulation layer **116** extends over the cathode **114** disposed over the anode **104**, and an upper surface **124** of the second portion **111***b*. The encapsulation layer **116** extends into the trench area **152** and contacts the lower surface **113** of the overhang extension **109**, as well as the lower sidewall **131**. Additionally, the encapsulation layer is disposed over the OLED material **112** and the cathode **114** within the trench area **152**. The encapsulation layer **116** includes the non-conductive inorganic material, such as the silicon-containing material. The silicon-containing material may include Si_3N_4 containing materials. In one or more embodiments, a global encapsulation layer **118** is over the encapsulation layer **116**. The global encapsulation layer **118** layer

fills the trench area **152** and the opening **115** and covers the entirety of the sub-pixel circuit **100**.

Each sub-pixel line includes one or more separation structures **125**, with adjacent sub-pixels sharing a separation structure **125** in the line plane. The separation structures **125** are permanent to the sub-pixel circuit **100**. The separation structures **125** further define each sub-pixel of the sub-pixel line. The separation structures **125** are disposed over the protection layer **106** in-between the anodes **104** of the sub-pixels within a sub-pixel line. For example, FIG. **1**B shows the first sub-pixel **108**A and the second sub-pixel **108**B of the first sub-pixel line **107**A. The separation structure **125** is disposed between the anodes **104** of the first sub-pixel **108**A and the second sub-pixel **108**B. The separation structure **125** includes a first layer **125***a* and a second layer **125***b*. The first layer **125***a* is disposed between the first sub-pixel **108**A and the second sub-pixel **108**B. The first layer **125***a* includes the first material having the first composition of the first portion **111***a* of the overhang structure **110**. The first composition includes silicon (Si), silicon nitride (Si_3N_4), silicon oxide (SiO_2), or combinations thereof. The second layer **125***b* is disposed over the first layer **125***a* and the upper portion **106***a* of the protective layer **106**. In one or more embodiments the second layer **125***b* extends over a portion of the upper portion **106***a* of the protective layer **106**. In one or more embodiments, the second layer **125***b* extends past the upper portion **106***a* of the protective layer **106** and onto the uppermost surface **204** of the anode **104**. The second layer **125***b* includes the second material having the second composition of the second portion **111***b* of the overhang structure **110**. The second composition includes silicon (Si), silicon nitride (Si_3N_4), silicon oxide (SiO_2), or combinations thereof. An upper surface **127***a* of the first layer **125***a* is coplanar to the upper portion **106***a* of the protective layer **106**. A lower surface **127***b* of the second layer **125***b* contacts the upper surface **127***a* of the first layer **125***a* and the upper portion **106***a* of the protective layer **106**. An upper surface **127***c* of the second layer is above the upper surface **127***a* of the first layer **125***a* and the upper portion **106***a* of the protective layer **106**. The separation structure **125** extends along the pixel plane through the sub-pixel lines.

The OLED material **112** is disposed over and in contact with the uppermost surface **204** of the anode **104** and the separation structure **125** in the line plane. The cathode **114** is disposed over the OLED material **112** in the line plane. The thickness of the OLED material **112** and the cathode **114** is substantially uniform in the line plane. The encapsulation layer **116** is disposed over the cathode **114** in the line plane. As shown in FIG. **1**B, the OLED material **112**, the cathode **114**, and the encapsulation layer **116** maintain continuity along the length of the line plane in order to apply current across each sub-pixel line. In one or more embodiments, the global encapsulation layer **118** is disposed over the encapsulation layer **116** in the line plane.

FIG. **1**C is a schematic, top view of a sub-pixel circuit **100**, according to embodiments. It should be understood that FIG. **1**C does not include the protective layer **106**, OLED material **112**, the cathode **114**, the encapsulation layer **116**, or the global encapsulation layer **118** for illustrative purposes. One or more busbars **150** are disposed adjacent to the substrate **102**. The busbars **150** provide a current to the sub-pixel circuit **100**. Although FIG. **1**C depicts sub-pixel circuit **100** including four busbars **150**, it is contemplated that any number of busbars can be used, including but not limited to one busbar, two busbars, three busbars, or six busbars.

FIG. **2** is a close up schematic, cross-sectional view of sub-pixel circuit **100**, according to one or more embodiments. A first width W1 of the lower surface **113** of the overhang extension **109** is defined by a distance from the lower sidewall **131** of the first portion **111***a* of the overhang structure **110** to the upper sidewall **133** of the second portion **111***b* of the overhang structure **110**. A first height H1 is defined by the distance from a lower surface of the first portion **111***a* of the overhang structure **110** to the lower surface **113** of the second portion **111***b* of the overhang structure **110**. A second height H2 is defined by the distance from the lower surface **113** of the second portion **111***b* of the overhang structure **110** to the upper surface **124** of the second portion **111***b* of the overhang structure **110**. An overhang thickness H3 is defined by the total combined distance of the first height H1 and the second height H2. The anode thickness H4 is defined by the total thickness of the anode **104** from a lower surface **202** of the anode **104** to the uppermost surface **204** of the anode **104**. The anode thickness H4 is substantially the same as the overhang thickness H3 of the overhang structure. The trench area **152** has a trench width W2 between the lower sidewalls **131** of adjacent the first portions **111***a*.

The OLED material **112** is disposed over the anode **104**, the overhang structure **110**, and inside the trench area **152**. The OLED material **112** has four different portions. The first portion **212**A of the OLED material **112** is disposed over the uppermost surface **204** of the anode **104**. The first portion **212**A is in direct contact with the anode **104**. The first portion **212**A has a first thickness T1. The first thickness T1 is the same across the entire first portion **212**A. The second portion **212**B of the OLED material **112** is disposed over the upper surface **124** of the second portion **111***b*. The second portion **212**B has a second thickness T2. The second thickness T2 is the same across the entire second portion **212**B. The first thickness T1 and the second thickness T2 are substantially the same. A third portion **212**C of the OLED material **112** is disposed over the substrate **102** or the protective layer **106** within the trench area **152**. The third portion **212**C within the well **105** has a varying third thickness T3. The third portion **212**C is thickest directly under the opening **115** of the trench area **152**. The third thickness T3 under the overhang extension **109** is less than the third thickness T3 under the opening **115** of the trench area **152**. The third thickness T3 decreases as the third portion **212**C approaches the lower sidewalls **131** of the first portion **111***a*. The third thickness T3 under the opening **115** of the trench area **152** is substantially the same as the first thickness T1 and second thickness T2. The third thickness T3 under the overhang extension **109** is less than first thickness T1 and the second thickness T2. In some embodiments, as shown in FIG. **2**, the third portion **212**C contacts the sidewall of the first portion **111***a* of the overhang structure **110**. In other embodiments, not shown, the third portion **212**C may not extend to the sidewall of the first portion **111***a* of the overhang structure **110**. The fourth portion **212**D of the OLED material **112** is disposed over the upper sidewall **133** of the second portion **111***b* of the overhang structure **110**. The fourth portion **212**D has a fourth thickness T4. The fourth thickness T4 is less than the first thickness T1 and the second thickness T2. In some embodiments, a thin layer of OLED material **112** is disposed over the lower sidewall **131** of the first portion **111***a* of the overhang structure **110**. In some embodiments, a thin layer of OLED material **112** is disposed over the lower surface **113** of the overhang extension **109**.

The cathode **114** is disposed over the OLED material **112**. The cathode **114** has four different portions. The first portion **214**A of the cathode **114** is disposed over the first portion **212**A of the OLED material **112**. The first portion **214**A has a fifth thickness T5. The fifth thickness T5 is the same across the entire first portion **212**A. The second portion **214**B of the cathode **114** is disposed over second portion **212**B of the OLED material **112**. The second portion **212**B has a sixth thickness T6. The sixth thickness T6 is the same across the entire second portion **212**B. The fifth thickness T5 and the sixth thickness T6 are substantially the same. A third portion **214**C of the cathode **114** is disposed over the third portion **212**C of the OLED material **112** within the trench area **152**. The third portion **214**C within the well **105** has a seventh thickness T7. The seventh thickness T7 under the opening **115** of the trench area **152** is substantially the same as the fifth thickness T5 and sixth thickness T6. The seventh thickness T7 under the overhang extension **109** is less than fifth thickness T5 and the sixth thickness T6. In some embodiments, as shown in FIG. **2**, the third portion **214**C contacts the sidewall of the first portion **111***a* of the overhang structure **110**. In other embodiments, not shown, the third portion **214**C may not extend to the sidewall of the first portion **111***a* of the overhang structure **110**. The fourth portion **214**D of the cathode **114** is disposed over the fourth portion **212**D of the OLED material **112**. The fourth portion **214**D has an eighth thickness T8. The eighth thickness T8 is less than the fifth thickness T5 and the sixth thickness T6. In some embodiments, a thin layer of cathode **114** is disposed over the lower sidewall **131** of the first portion **111***a* of the overhang structure. In some embodiments, a thin layer of the cathode **114** is disposed over the lower surface **113** of the overhang extension **109**.

FIG. **3** is a flow diagram of a method **300** for forming a sub-pixel circuit **100** according to embodiment. FIG. **4**A-**4**Q are schematic, cross-sectional views of a substrate **102** during a method **300** for forming a sub-pixel circuit **100** according to embodiments described herein. It should be understood that although FIGS. **4**A-**4**Q depict a substrate with two anodes, method **300** can be performed on a substrate with any number of anodes.

At operation **301**, as shown in FIG. **4**A (along the pixel plane), one or more anodes **104** are deposited over the substrate **102**. The anode **104** may be deposited on the substrate **102**. In another embodiment, the anode **104** is deposited on a base layer. The base layer is disposed on the substrate **102**. The anode **104** may be deposited using metal-organic decomposition (MOD). A well **105** separates an anode **104** from an adjacent anode **104**.

At operation **302**, as shown in FIG. **4**B (along the pixel plane), a protective layer **106** is deposited over the substrate **102**. The protective layer **106** is deposited on both a top surface and the sidewalls of the anode **104**. The protective layer **106** is also deposited between the anodes **104** within the well **105**. The protective layer **106** is formed of a material including aluminum oxide (Al_2O_3). The protective layer **106** has a thickness within a range of about 10 nm to about 50 nm such as a thickness of about 20 nm.

At operation **303**, as shown in FIG. **4**C (along the pixel plane), a first material **402** is deposited over the protective layer **106**. In one or more embodiments, the first material **402** is deposited over the anodes **104** and within the well **105**. A height H1 from the substrate **102** to an upper surface **403** of the first material **402** is within a range of about 400 nm to about 600 nm such as about 500 nm. An upper surface within the well **420** of the first material **402** is above the portion of the protective layer **106** disposed over the uppermost surface **204** of the anode **104**. The first material **402** has the first composition of the first portion **111***a* of the overhang structure **110** and the first layer **125***a* of the separation structure **125**. In one or more embodiments, the first composition includes silicon (Si), silicon nitride (Si_3N_4), silicon oxide (SiO_2), or combinations thereof.

In one or more embodiments, the first material **402** is disposed within the well **105**. The upper surface within the well **420** of the first material **402** is co-planar to the portion of the protective layer **106** disposed over the uppermost surface **204** of the anode **104**. In one or more embodiments, the first material **402** is disposed within the well **105** while leaving the portion of the protective layer **106** disposed over the uppermost surface **204** of the anode **104** exposed.

At operation **304**, as shown in FIG. **4**D (along the pixel plane), the first material **402** disposed the portion of the protective layer **106** disposed over the uppermost surface **204** of the anodes **104** is removed using a chemical mechanical planarization (CMP) operation. The upper surface within the well **420** of the first material **402** is planarized during the CMP operation. After the CMP operation, the upper surface within the well **420** of the first material **402** is coplanar to the upper surface of the portion of the protective layer **106** disposed over the uppermost surface **204** of the anode **104**. It is contemplated that in one or more embodiments, that operation **304** is optional in performing the method **300**.

At operation **305**, as shown in FIG. **4**E (along the pixel plane), a second material **404** is deposited over the first material **402** and the portion of the protective layer **106** disposed over the uppermost surface **204** of the anode **104**. The second material **404** includes the second material having the second composition of the second portion **111***b* of the overhang structure and the second layer **125***b* of the separation structure. The difference in the first composition and the second composition results in different etch rates such that the second portion **111***b* has the overhang extension **109** that extends past a lower sidewall **131** of the first portion **111***a* as described herein. The different etch rates. The second composition includes silicon oxide (SiO_2). In one or more embodiments, one or more gaps may be formed while depositing the second material **404**.

At operation **306**, as shown in FIG. **4**F (along the pixel plane), portions of the second material **404** are removed during a photolithography process. During the photolithography process a photoresist is deposited and patterned over a desired portion of the second material **404**. After the photoresist is patterned, the desired portion of the second material **404** is removed by an etching process. In one or more embodiments, the etching process is a wet etching process. In one or more embodiments, a desired portion of the portion of the protective layer **106** disposed over the uppermost surface **204** is removed during operation **306** as well. An optional wet etch process may be performed after the photolithography process in order to form a smooth taper on the upper surface **421** of the second material. After operation **306** is performed the second material **404** extends over the remaining first material **402** as well as a portion of the protective layer **106** disposed over the uppermost surface **204** of the anode **104**.

At operation **307**, as shown in FIG. **4**G (along the pixel plane), a photoresist **408** is disposed over the anodes **104** and a portion of the well **105**. An opening **410** is formed in the photoresist **408** over a center portion of the well **105**. The opening **410** exposes a middle portion of the second material **404**. The opening **410** is in a range of about 100 nm to about 500 nm, such was in a range of about 200 nm to about 300 nm.

At operation **308**, as shown in FIG. **4**H (along the line plane), a first etching process E1 is performed. The first etching process E1 is the first step in a three step reactive ion etching (REI) process. During the first etching process E1 an aluminum oxide (Al_2O_3) chlorine (CI) based dry etch is used to widen opening **410** formed in the photoresist. The first etching process E1 is an anisotropic process. The second material **404** may be slightly etched into as well.

At operation **309**, as shown in FIG. **4**I (along the pixel plane) a second etching process E2 is performed. The second etching process E2 is the second step in a three step reactive ion etching (REI) process. During the second etching process E2 an etchant is used vertically etch a channel **412** through the second material **404** and into the first material **402**. The etchant includes etchants such as a silicon monoxide (SiO) fluorine (F) based dry etch. The second etching process E2 is an anisotropic process. The second etching process E2 vertically etches into the channel **412** first material **402**. The etching process E2 is stopped before channel **412** reaches the protective layer **106**. The channel **412** has a width within a range of about 200 nm to about 500 nm such as a width within a range of about 250 nm to about 400 nm.

At operation **310**, as shown in FIG. **4**J (along the pixel plane) a third etching process E3 is performed. The third etching process E3 is the third step in a three step reactive ion etching (REI) process. During the third etching process E3 an etchant is used selectively etch the first material **402**. The first material **402** is formed of the first composition with the first etch rate. The second material **404** is formed of the second composition having the second etch rate. The different etch rates of the first composition and the second composition causes the first material **402** to be widened greater rate than the second material **404** during the third etching process. The channel **412** in the first material **402** is widened during the third etching process E3. The etchant includes etchants such as silver (Ag) potassium (KI) based wet etchant, or silver (Ag) iodine (I_2) based wet etchant.

The third etching process E3 is an isentropic process. The third etching process selectively etched the first material **402**, while avoiding etching into the second material **404** and the protective layer **106**. The third etching process E3 forms adjacent the overhang structures **110***a*, **110***b* within the well **105**. The adjacent overhang structures **110***a*, **110***b* define the trench area **152**. After the third etching process E3 is performed the lower sidewalls **131** of the adjacent overhang structures **110** within the well **105** are separated by a distance D1. After the third etching process E3 is performed the upper sidewalls **133** of the adjacent overhang structures **110** within a well **105** are separated by a distance D2.

At operation **311**, as shown in FIG. **4**K (along the pixel plane) the photoresist **408** is removed. In one or more embodiments, a portion of the protective layer **106** disposed over the anodes **104** is removed exposing the uppermost surface **204** of the anode **104**, and forming the upper portion **106***a* of the protective layer **106**. The portion of the protective layer **106** disposed over the uppermost surface **204** of the anodes **104** can be removed using a hydrogen fluoride (HF) wet etch. Alternatively, the protective layer **106** disposed over the uppermost surface **204** of the anodes **104** can be removed using an OLED O_2 based plasma ashing process. After operation **310** is performed, a portion middle of the uppermost surface **204** of the anodes **104** is exposed, while an outer portion of the uppermost surface **204** of the anodes **104** remains covered by the upper portion **106***a* of the protective layer **106** as well as a portion of the second portion **111***b* of the overhang structures **110**.

At operation **312**, as shown in FIG. **4**L (along pixel plane), the first OLED material **112** of the first sub-pixel line **107**A and the first cathode **114** are deposited. The first OLED material **112** includes an HIL material. The shadowing of the adjacent overhang extensions **109** within the trench area **152** provides for an electrical break in the OLED material **112** and the cathode **114**. The first OLED material **112** and the first cathode **114** may separate (e.g., may be non-continuous) along the pixel plane. The first OLED material **112** and first cathode **114** maintain continuity along the line plane, e.g., the first OLED material **112** and the first cathode **114** are disposed over the separations structures **125**. The total thickness of the first OLED material **112** and the first cathode **114** is from about 100 nm to about 150 nm.

At operation **313**, as shown in FIG. **4**M (along the pixel plane), a protective photoresist **416** is deposited over the first sub-pixel line **107**A. The protective photoresist **416** extends over the anode **104** and the first overhang structure **110***a* within the first sub-pixel line **107**A. The protective photoresist **416** extends into the opening **115** of the trench area **152**. The protective photoresist covers the first OLED material **112** and the first cathode **114** disposed over the first overhang structure **110***a* and protects a portion of the first OLED material **112** and the first cathode **114** within the well **105**. The protective photoresist does not cover the first OLED material **112** and the first cathode **114** disposed over the second overhang structure **110***b*.

At operation **314**, as shown in FIG. **4**N (along the pixel plane), the first OLED material **112** and the first cathode **114** disposed over the second sub-pixel line **107**B is etched away. The first OLED material **112** and the first cathode **114** protected by the protective photoresist **416** is protected during the etching process. After the etching process is completed, the protective photoresist **416** is removed and the first OLED material **112** and the first cathode **114** that was covered by the protective photoresist **416** during the etching process remains.

At operation **315**, as shown in FIG. **4**O (along pixel plane), a second OLED material **112'** of the second sub-pixel line **107**B and a second cathode **114'** of the second sub-pixel line **107**B are deposited. The second OLED material **112'** includes an HIL material. The shadowing of the adjacent overhang extensions **109** provides within the trench area **152** provides for an electrical break in the second OLED material **112'** and the second cathode **114'**. The second OLED material **112'** and the second cathode **114'** may separate (e.g., may be non-continuous) along the pixel plane. The second OLED material **112'** and second cathode **114'** maintain continuity along the line plane, e.g., the second OLED material **112'** and the second cathode **114'** are disposed over the separations structures **125**. The total thickness of the second OLED material **112'** and the second cathode **114'** is from about 100 nm to about 150 nm.

At operation **316**, as shown in FIG. **4**P (along the pixel plane), a protective photoresist **416** is deposited over the second sub-pixel line **107**B. The protective photoresist **416** extends over the anode **104** and the second overhang structure **110***b* within the second sub-pixel line **107**B. The protective photoresist **416** extends into the opening **115** of the trench area **152**. The protective photoresist covers the second OLED material **112'** and the second cathode **114'** disposed over the second overhang structure **110***b* and protects a portion of the second OLED material **112'** and the second cathode **114'** within the trench area **152**. The protective photoresist does not cover the second OLED material **112'** and the second cathode **114'** disposed over the first overhang structure **110***a* and the first sub-pixel line **107**A.

At operation **317**, as shown in FIG. **4**Q (along the pixel plane), the second OLED material **112'** and the second cathode **114'** of the second sub-pixel line **107**B, disposed over the first sub-pixel line **107**A is etched away. The second OLED material **112'** and the second cathode **114'** disposed over the first sub-pixel line is etched away so that the cathode **114** of the first sub-pixel line **107**A is exposed. The second OLED material **112'** and the second cathode **114'** of the second sub-pixel line **107**B protected by the protective photoresist **416** is protected during the etching process. After the etching process is completed, the protective photoresist **416** is removed and the second OLED material **112'** and the second cathode **114'** that was covered by the protective photoresist during **416** the etching process remains. After the photoresist is removed, the first sub-pixel line **107**A includes the first OLED material **112** and the first cathode **114** of the first sub-pixel line **107**A, and the second sub-pixel line **107**B includes the second OLED material **112'** and the second cathode **114'** of the second sub-pixel line **107**B.

At operation **318**, as shown in FIG. **4**R (along the pixel plane), an encapsulation layer **116** is deposited over the sub-pixel lines **107**A, **107**B. The encapsulation layer **116** extends over the cathodes **114**, **114'** disposed over the anode **104**, and the overhang structures **110**. The encapsulation layer extends into the wells **105** and contacts a bottom surface of the overhang extension **109**, as well as a sidewall of the first portion **111***a*. Additionally, the encapsulation layer is disposed over the OLED materials **112**, **112'** and the cathodes **114**, **114'** within the trench area **152**. The encapsulation layer **116** includes the non-conductive inorganic material, such as the silicon-containing material. The silicon-containing material may include Si_3N_4 containing materials. In one or more embodiments, a global encapsulation layer **118** may optionally be disposed over the encapsulation layer **116**. The global encapsulation layer **118** layer fills the openings **115** of the trench area **152** and covers the entirety of the sub-pixel circuit **100**.

Benefits of the present disclosure include increased pixels-per-inch, decreased current leakage, increased device performance, increased device image resolution, decreased cost, and decreased maintenance.

It is contemplated that one or more aspects disclosed herein may be combined. As an example, one or more aspects, features, components, operations and/or properties of the sub-pixel circuit **100**, the substrate **102**, the anode **104**, the protective layer **106**, the OLED material **112**, the cathode **114**, the encapsulation layer **116**, the global encapsulation layer **118**, the wells **105**, the overhang structures **110**, the first portion **111***a*, the second portion **111***b*, the opening **115**, the sub-pixel lines **107**A, **107**B, **107**C, the sub-pixels **108**A, **108**B, **108**C, **108**D, **108**E, **108**F, the busbars **150**, and/or method **300** may be combined. Moreover, it is contemplated that one or more aspects disclosed herein may include some or all of the aforementioned benefits.

While the foregoing is directed to embodiments of the present disclosure, other and further embodiments of the disclosure may be devised without departing from the basic scope thereof, and the scope thereof is determined by the claims that follow.

What is claimed is:

1. A sub-pixel circuit, comprising:

at least two anodes disposed over a substrate, adjacent anodes defining a well;

adjacent overhang structures, the overhang structures comprising:

a first portion disposed in the well; and

a second portion disposed over the first portion and a portion of an uppermost surface of the anode, the second portion comprising:

overhang extensions extending past lower sidewalls of the first portion; and

an upper surface, the upper surface of the second portion is above the uppermost surface of the anodes, wherein the well has a trench area defined by the lower sidewalls and a bottom surface of the overhang extensions with a gap between the overhang extensions of the adjacent overhang structures,

an organic light emitting diode (OLED) material;

a cathode; and

an encapsulation layer, wherein the encapsulation layer extends under at least a portion of the second portion along a lower sidewall of the first portion, and contacts the bottom surface of the overhang extensions of the overhang structures.

2. The sub-pixel circuit of claim **1**, wherein the first portion comprises a first material and the second portion comprises a second material.

3. The sub-pixel circuit of claim **2**, wherein the first material and the second material are different.

4. The sub-pixel circuit of claim **2**, wherein the first material has a first etch rate and the second material has a second etch rate when exposed to an etchant.

5. The sub-pixel circuit of claim **4**, wherein the first etch rate and the second etch rate are different.

6. The sub-pixel circuit of claim **2**, wherein the first material comprises silicon.

7. The sub-pixel circuit of claim **2**, wherein the second material comprises silicon oxide.

8. The sub-pixel circuit of claim **2**, further comprising:

a global encapsulation layer disposed over the encapsulation layer.

9. The sub-pixel circuit of claim **8**, wherein the global encapsulation layer fills the trench area and the gap between the second portion of the adjacent overhang structures.

10. The sub-pixel circuit of claim **1**, wherein the cathode is disposed over the upper surface of the overhang structures, under the overhang extensions, and within the trench area.

11. The sub-pixel circuit of claim **1**, wherein the OLED material is disposed over the substrate within the trench area.

12. The sub-pixel circuit of claim **1**, wherein a first thickness of the OLED material disposed over the anodes and the upper surface of the overhang structures is larger than a second thickness of the OLED material disposed within the trench area.

13. A sub-pixel circuit, comprising:

at least two anodes disposed over a substrate, adjacent anodes defining a well;

adjacent overhang structures, the overhang structures comprising:

a first portion disposed in the well; and

a second portion disposed over the first portion and a portion of an uppermost surface of the anode, the second portion comprising:

overhang extensions extending past lower sidewalls of the first portion; and

an upper surface, the upper surface of the second portion is above the uppermost surface of the anodes, wherein the well has a trench area defined by the lower sidewalls and a bottom surface of the

overhang extensions with a gap between the overhang extensions of the adjacent overhang structures,

an organic light emitting diode (OLED) material;

a cathode;

an encapsulation layer; and

a protective layer disposed on the substrate within the well and extending over at least a portion of the anodes.

14. A sub-pixel circuit, comprising:

at least two anodes disposed over a substrate, adjacent anodes defining a well;

adjacent overhang structures, the overhang structures comprising:

a first portion disposed in the well; and

a second portion disposed over the first portion and a portion of an uppermost surface of the anode, the second portion comprising:

overhang extensions extending past lower sidewalls of the first portion; and

an upper surface, the upper surface of the second portion is above the uppermost surface of the anodes, wherein the well has a trench area defined by the lower sidewalls and a bottom surface of the overhang extensions with a gap between the overhang extensions of the adjacent overhang structures,

an organic light emitting diode (OLED) material, wherein the OLED material is disposed within the trench area contacts the lower sidewalls of the adjacent overhang structures;

a cathode; and

an encapsulation layer.

15. A device, comprising:

a first sub-pixel and a second sub-pixel each comprising:

anodes disposed over a substrate, the anodes comprising an uppermost surface;

a plurality of overhang structures disposed over the substrate alongside opposite sidewalls of the anodes, the plurality of overhang structures comprising:

a first portion comprising a first material, the first portion further comprising a lower sidewall;

second portion disposed over the first portion and a portion of the uppermost surface of the anodes, the second portion comprising a second material, the second portion further comprising an overhang extension extending past the lower sidewall, wherein the lower sidewall of the first portion and a bottom surface of the overhang extension of the second portion partially define a trench area;

an organic light emitting diode (OLED) material; and

an encapsulation layer, wherein the encapsulation layer extends under at least a portion of the second portion along the lower sidewall of the first portion, and contacts the bottom surface of the overhang extension of the overhang structures.

16. The device of claim **15**, wherein the first material has a first etch rate and the second material has a second etch rate.

17. The device of claim **16**, wherein the first etch rate and the second etch rate are different.

18. The device of claim **15**, wherein a cathode is disposed over the upper surface of the overhang structures, under the overhang extensions, and within the trench area.

19. The device of claim **15**, wherein the OLED material is disposed over the substrate within the trench area.

20. The device of claim **15**, wherein a first thickness of the OLED material disposed over the anodes and the upper surface of the overhang structures is larger than a second thickness of the OLED material disposed within the trench area.

21. The device of claim **15**, wherein the first material comprises silicon.

22. The device of claim **15**, wherein the second material comprises silicon oxide.

23. The device of claim **15**, further comprising:

a global encapsulation layer disposed over an encapsulation layer.

24. The device of claim **23**, wherein the global encapsulation layer fills the trench area.

25. A device, comprising:

a first sub-pixel and a second sub-pixel each comprising:

anodes disposed over a substrate, the anodes comprising an uppermost surface;

a plurality of overhang structures disposed over the substrate alongside opposite sidewalls of the anodes, the plurality of overhang structures comprising:

a first portion comprising a first material, the first portion further comprising a lower sidewall;

second portion disposed over the first portion and a portion of the uppermost surface of the anodes, the second portion comprising a second material, the second portion further comprising an overhang extension extending past the lower sidewall, wherein the lower sidewall of the first portion and a bottom surface of the overhang extension of the second portion partially define a trench area;

an organic light emitting diode (OLED) material; and

a protective layer disposed on the substrate within the trench area and extending over at least a portion of the anodes.

26. A device, comprising:

a first sub-pixel and a second sub-pixel each comprising:

anodes disposed over a substrate, the anodes comprising an uppermost surface;

a plurality of overhang structures disposed over the substrate alongside opposite sidewalls of the anodes, the plurality of overhang structures comprising:

a first portion comprising a first material, the first portion further comprising a lower sidewall;

second portion disposed over the first portion and a portion of the uppermost surface of the anodes, the second portion comprising a second material, the second portion further comprising an overhang extension extending past the lower sidewall, wherein the lower sidewall of the first portion and a bottom surface of the overhang extension of the second portion partially define a trench area; and

an organic light emitting diode (OLED) material, wherein the OLED material is disposed within the trench area contacts the lower sidewall of the overhang structures.

27. A sub-pixel circuit, comprising:

a plurality of anodes disposed over a substrate, adjacent anodes defining a well;

adjacent overhang structures, the overhang structures comprising:

a first portion disposed in the well; and

a second portion disposed over the first portion and a portion of an uppermost surface of the anode, the second portion comprising overhang extensions extending past lower sidewalls of the first portion, wherein the well has a trench area defined by the lower sidewalls and a bottom surface of the overhang extensions with a gap between the overhang extensions of the adjacent overhang structures;

an organic light emitting diode (OLED) material; and

an encapsulation layer, wherein the encapsulation layer extends under at least a portion of the second portion along the lower sidewall of the first portion, and contacts the bottom surface of the overhang extension of the overhang structures.

28. The sub-pixel circuit of claim **27**, wherein the first portion further comprises first material having a first etch rate, and the second portion further comprises a second material having a second etch rate, wherein the second material is different than the first material.

* * * * *