US012403597B1

(12) **United States Patent**
Sykes et al.

(10) **Patent No.: US 12,403,597 B1**
(45) **Date of Patent: Sep. 2, 2025**

(54) **INTUITIVE VIRTUAL REALITY INTERFACE FOR CONTROLLING ROBOTS**

(71) Applicant: **Altec Industries, Inc.**, Birmingham, AL (US)

(72) Inventors: **Jonathan Westin Sykes**, Gower, MO (US); **Robert Nichols**, Saint Joseph, MO (US); **David F. Lindquist**, Cameron, MO (US)

(73) Assignee: **Altec Industries, Inc.**, Birmingham, AL (US)

(*) Notice: Subject to any disclaimer, the term of this patent is extended or adjusted under 35 U.S.C. 154(b) by 0 days.

(21) Appl. No.: **18/927,001**

(22) Filed: **Oct. 25, 2024**

(51) **Int. Cl.**

B25J 19/02	(2006.01)
B25J 9/02	(2006.01)
B25J 9/16	(2006.01)
G02B 27/01	(2006.01)

(52) **U.S. Cl.**
CPC ***B25J 9/1661*** (2013.01); ***B25J 9/023*** (2013.01); ***B25J 9/161*** (2013.01); ***B25J 19/023*** (2013.01); ***G02B 27/0172*** (2013.01)

(58) **Field of Classification Search**
CPC B25J 19/023; B25J 9/1689; B25J 9/1661; B25J 9/161; G02B 27/0172
See application file for complete search history.

(56) **References Cited**

U.S. PATENT DOCUMENTS

5,822,891	A	10/1998	Fujishima et al.
11,660,750	B1	5/2023	Sykes et al.
11,689,008	B1	6/2023	Nichols et al.
11,697,209	B1	7/2023	Mourlam et al.
11,717,969	B1	8/2023	Mourlam et al.
11,742,108	B1	8/2023	Naber et al.
11,749,978	B1	9/2023	Lindquist et al.
11,794,359	B1	10/2023	Sykes et al.
11,839,962	B1	12/2023	Nichols
11,997,429	B2	5/2024	Sykes et al.
2001/0055525	A1 *	12/2001	Inokuchi B25J 5/06 414/730
2016/0171862	A1	6/2016	Das et al.
2018/0057318	A1	3/2018	Benton et al.

(Continued)

OTHER PUBLICATIONS

U.S. Appl. No. 18/967,103 Non-Final Office Action issued Feb. 25, 2025.

Primary Examiner — Dalena Tran
(74) *Attorney, Agent, or Firm* — Erise IP, P.A.

(57) **ABSTRACT**

Systems and methods for providing a virtual reality interface operable to control a robot system by an operator are disclosed. In some embodiments, the robot system is provided on a boom of an aerial device. The robot system is operable to carry out instructions for performing work-related tasks in a work environment. An operator may interact with a virtual reality system providing the virtual reality interface to operate the robot system. The virtual reality interface may provide various menus and icon features that, when selected, cause display of menus and functions of the virtual reality interface. The virtual reality interface may provide a list of tasks to be performed and instructions to perform those tasks. In some embodiments, the icon features are presented based on the tasks to be performed and selection of the icon features initiates automated actions of the robot system to perform certain tasks.

20 Claims, 14 Drawing Sheets

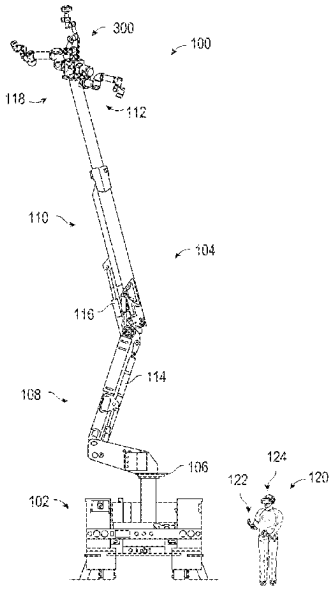

(56) **References Cited**

U.S. PATENT DOCUMENTS

2018/0179029	A1	6/2018	Schoonmaker	
2021/0107156	A1	4/2021	Park et al.	
2021/0331321	A1	10/2021	Sykes et al.	
2022/0036302	A1*	2/2022	Cella	G06N 20/00
2022/0347863	A1*	11/2022	Priest	B25J 13/006
2023/0113312	A1	4/2023	Junio	
2023/0168670	A1*	6/2023	Von Reventlow	B25J 9/163 701/2
2023/0255571	A1*	8/2023	Grajales	A61B 5/7465 351/246
2024/0025049	A1	1/2024	Zhu et al.	
2024/0033916	A1	2/2024	Sykes et al.	
2024/0033925	A1	2/2024	Mourlam et al.	
2024/0033928	A1	2/2024	Mourlam et al.	
2024/0038413	A1	2/2024	Naber et al.	
2024/0039265	A1	2/2024	Nichols et al.	
2024/0160229	A1*	5/2024	Rana	G05D 1/693
2024/0166475	A1	5/2024	Chettibi	
2024/0372350	A1	11/2024	Nichols et al.	

* cited by examiner

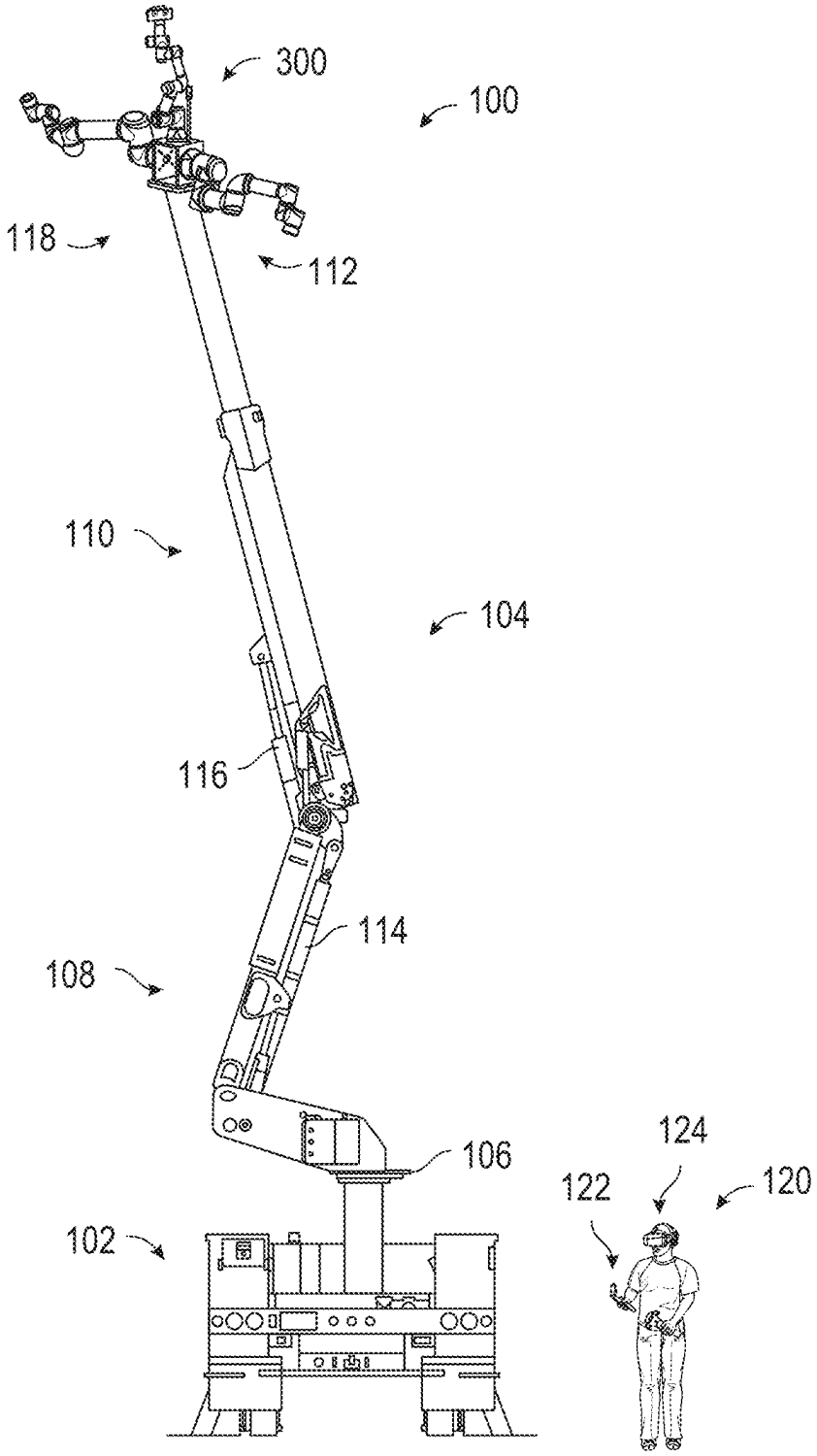

FIG. 1

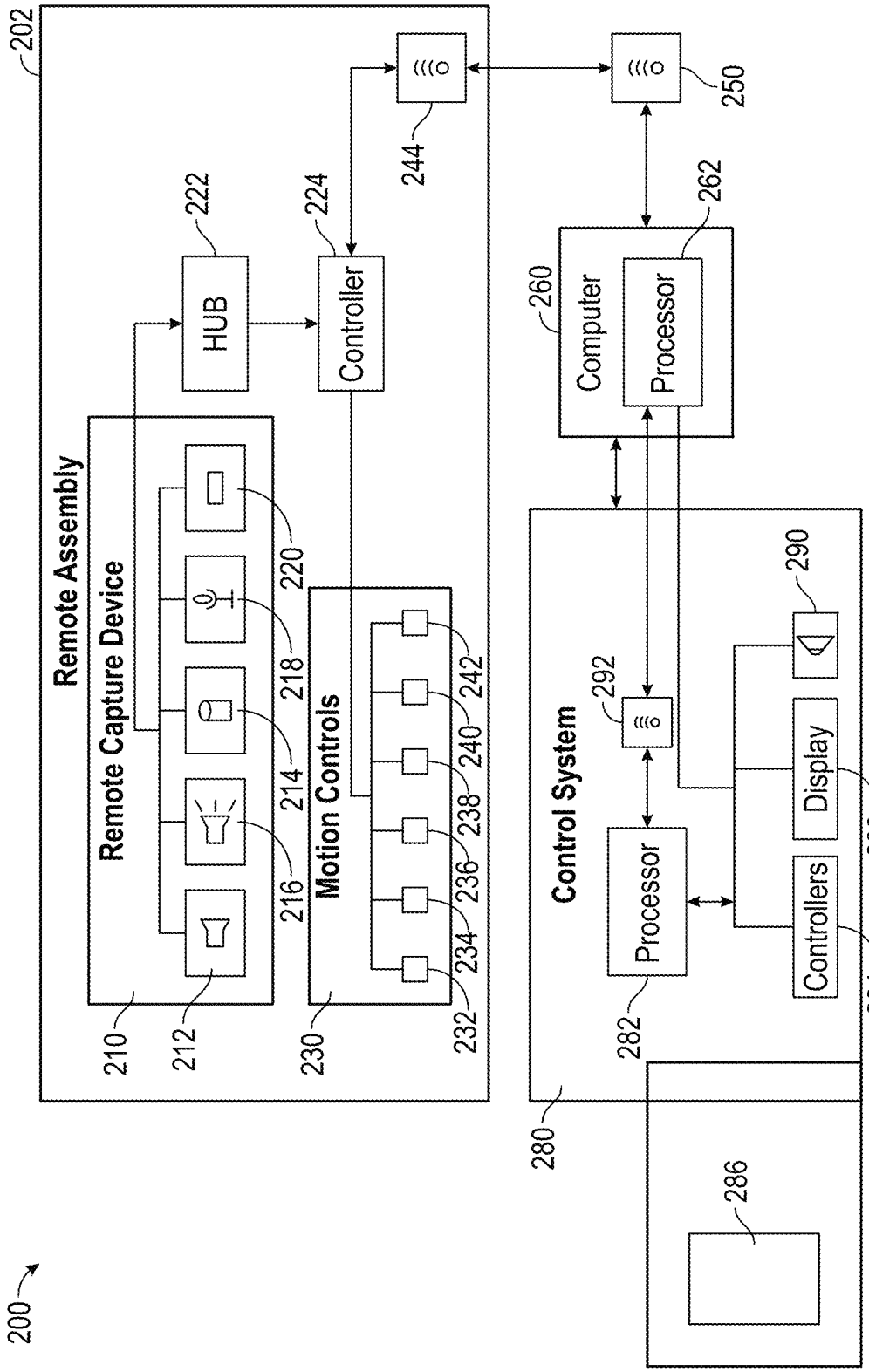
200
202
Remote Assembly
Remote Capture Device
210
212
214
216
218
220
HUB
222
Controller
224
Motion Controls
230
232
234
236
238
240
242
244
250
Computer
260
Processor
262
Control System
280
Processor
282
292
Controllers
284
Display
288
290
286

FIG. 2

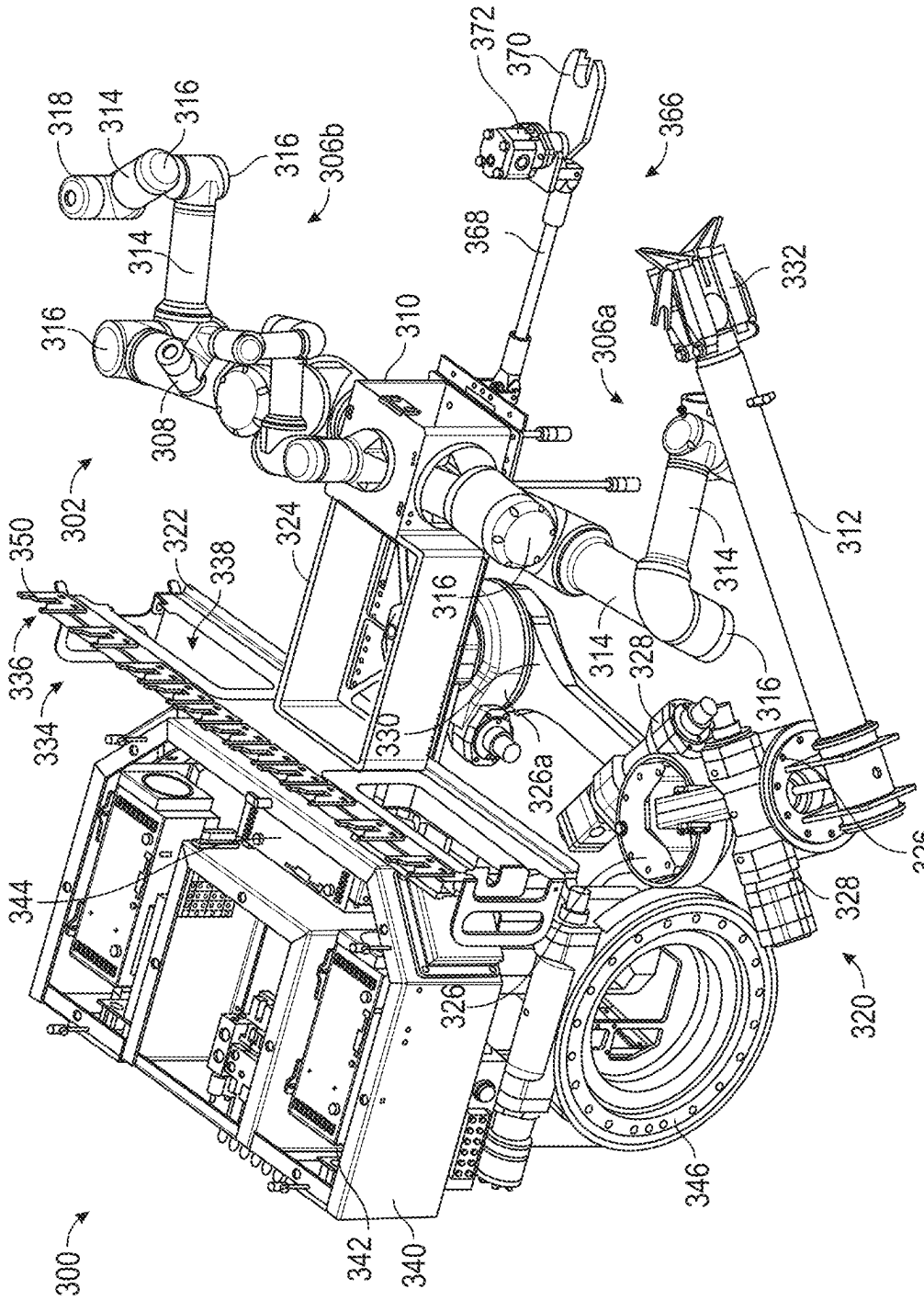
300
302
304
306a
306b
308
310
312
314
316
318
320
322
324
326
326a
328
330
332
334
336
338
340
342
344
346
350
366
368
370
372

FIG. 3

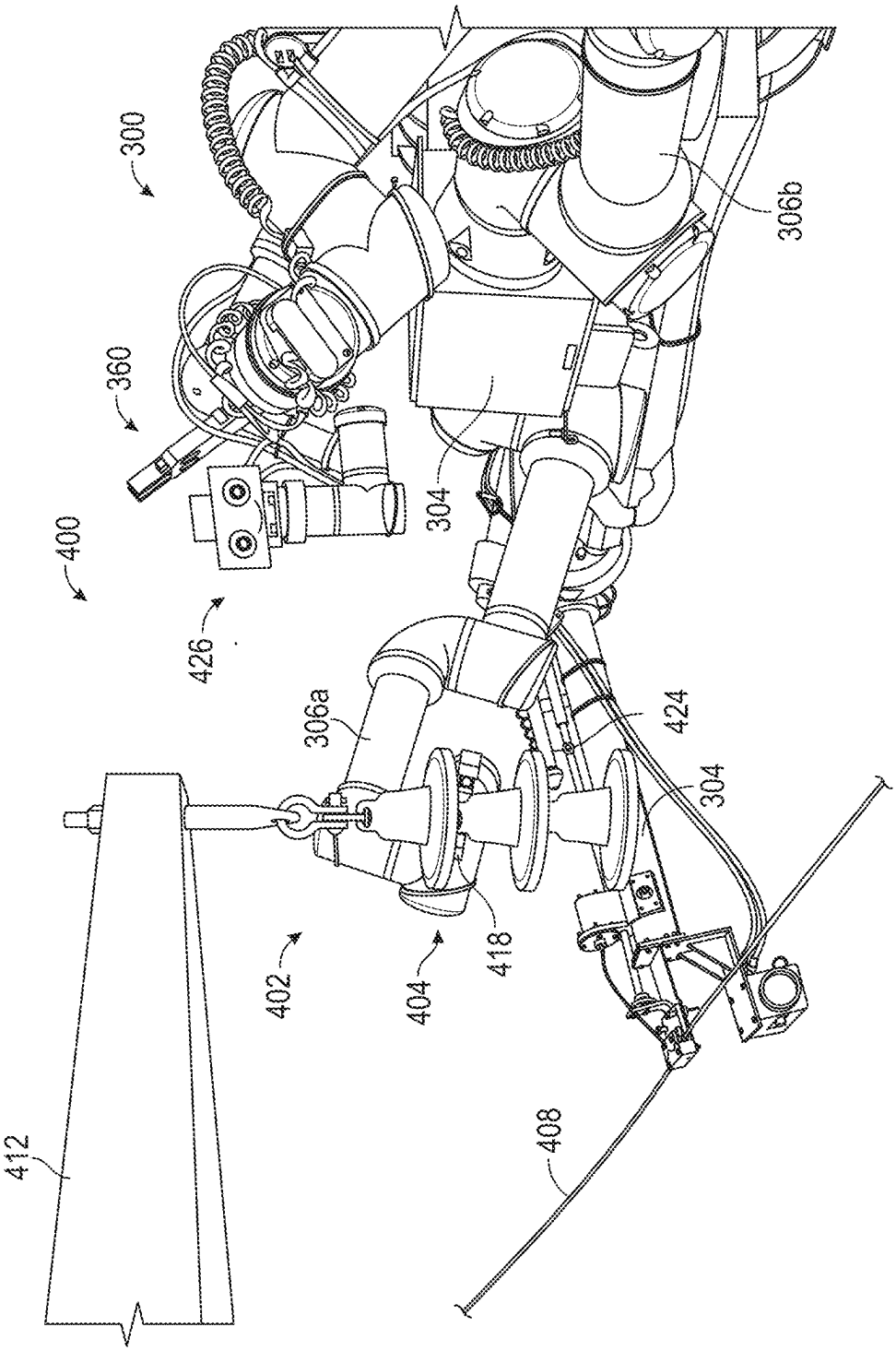

FIG. 4

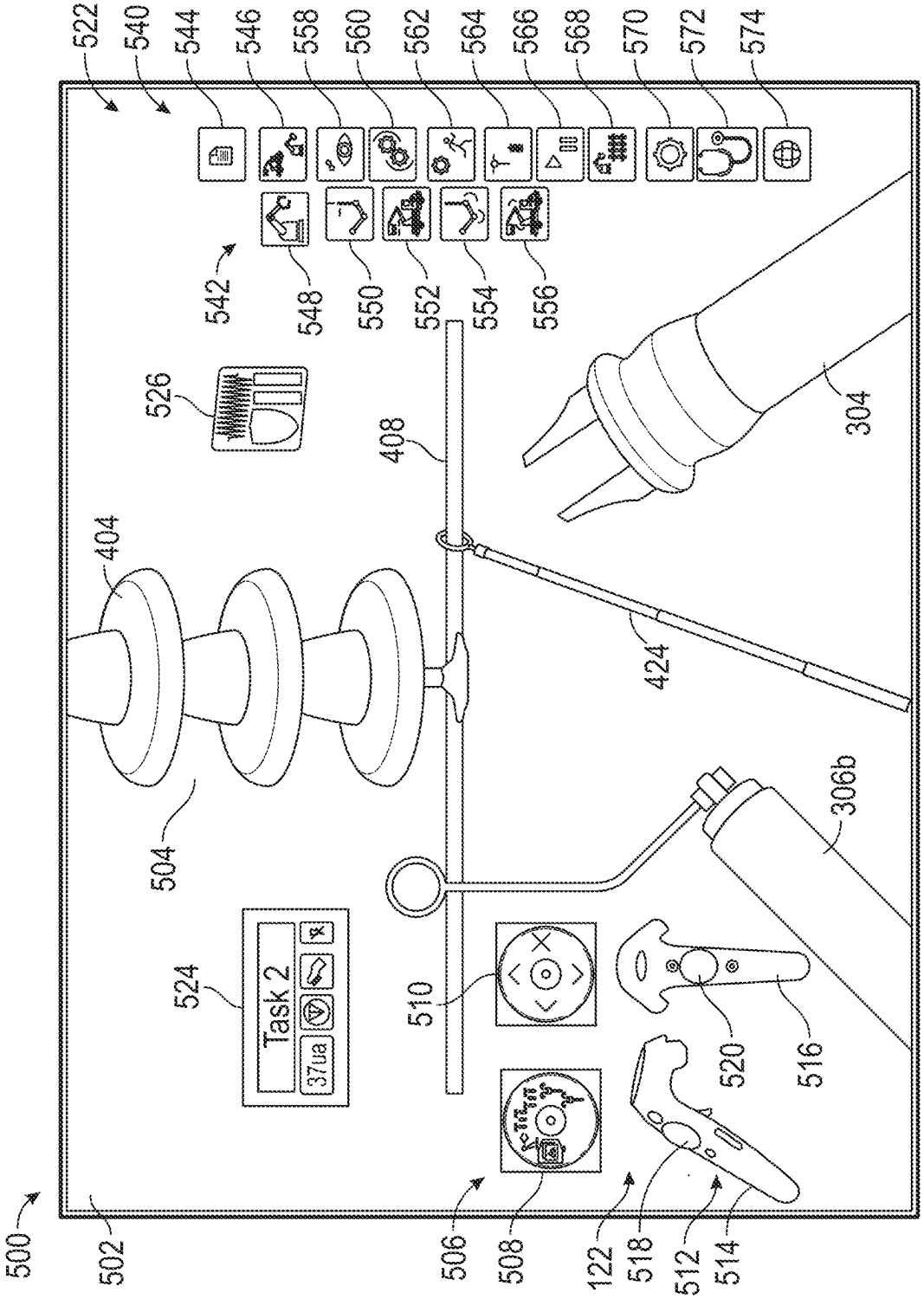
500
502
504
506
508
510
512
514
516
518
520
522
524
526
Task 2
37ua
304
306b
404
408
424
540
542
544
546
548
550
552
554
556
558
560
562
564
566
568
570
572
574
122

FIG. 5A

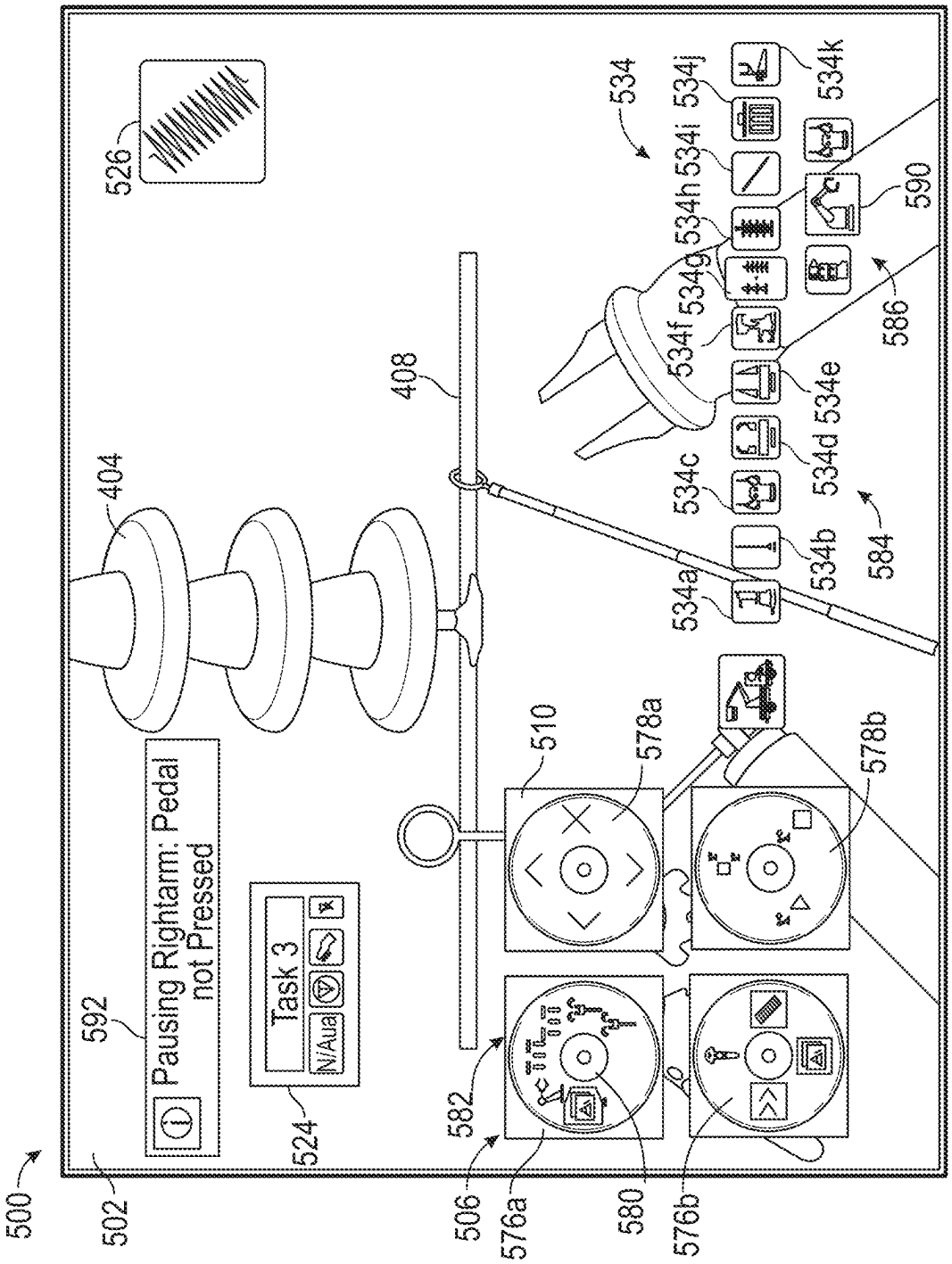
500
502
592
Pausing Rightarm: Pedal not Pressed
524
Task 3
N/Aua
404
408
526
506
582
576a
580
576b
510
578a
578b
534
534a
534b
534c
534d
534e
534f
534g
534h
534i
534j
534k
584
586
590

FIG. 5B

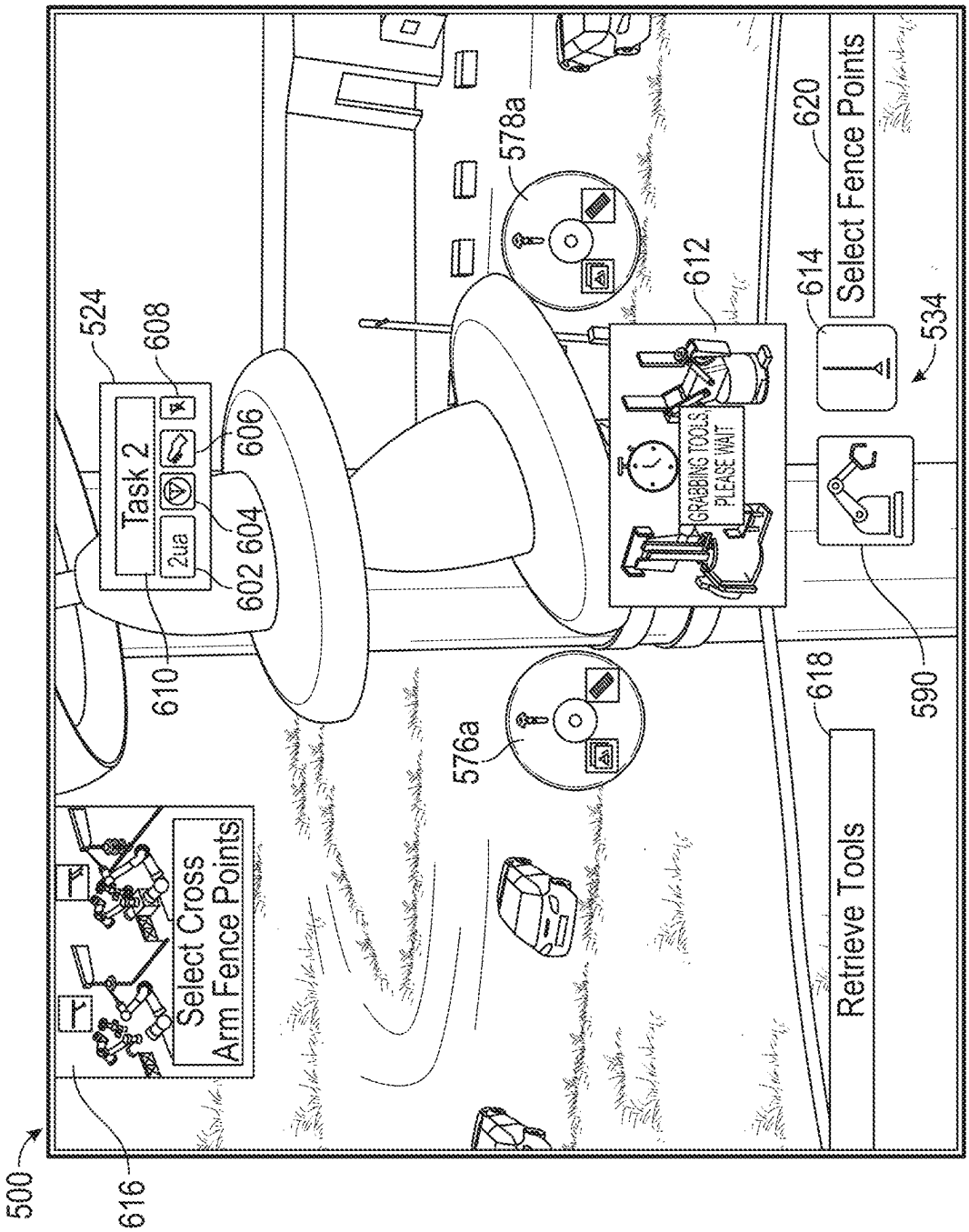
500
616
Select Cross Arm Fence Points
610
Task 2
2ua
602
604
606
608
524
576a
578a
GRABBING TOOLS PLEASE WAIT
612
Retrieve Tools
618
590
534
614
Select Fence Points
620

FIG. 6A

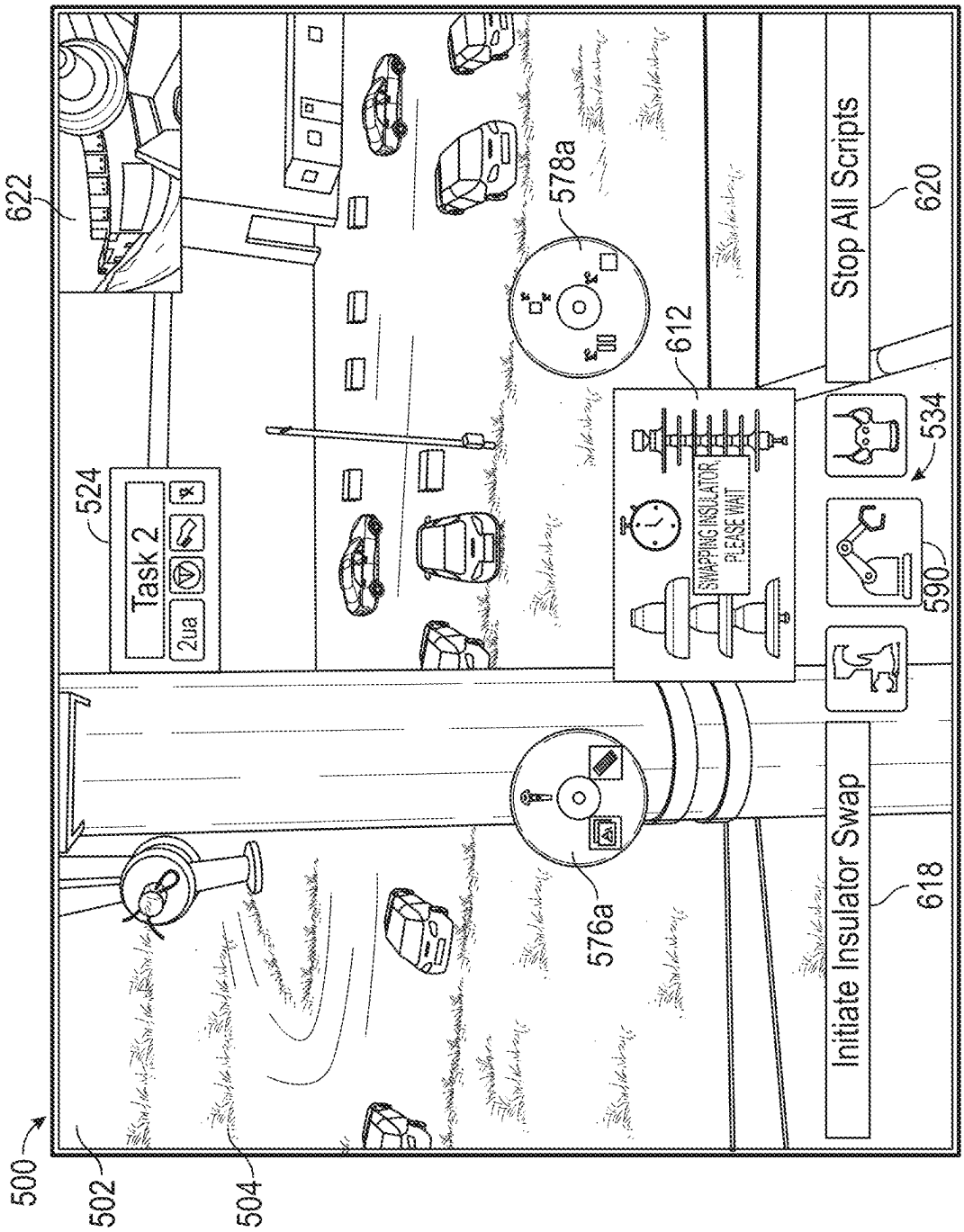
500
502
504
622
524
Task 2
2ua
578a
576a
612
SWAPPING INSULATOR
PLEASE WAIT
Initiate Insulator Swap
618
590
534
Stop All Scripts
620

FIG. 6B

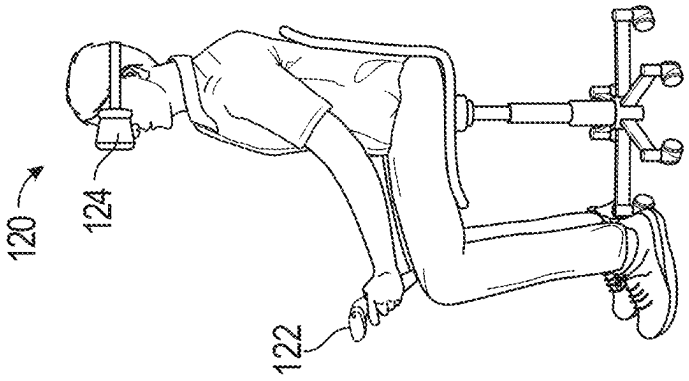

FIG. 8A

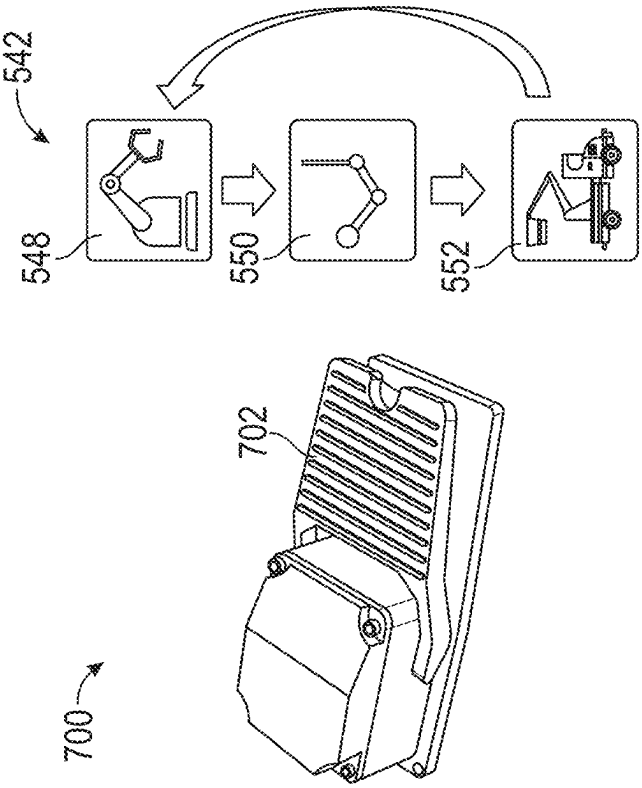

FIG. 7

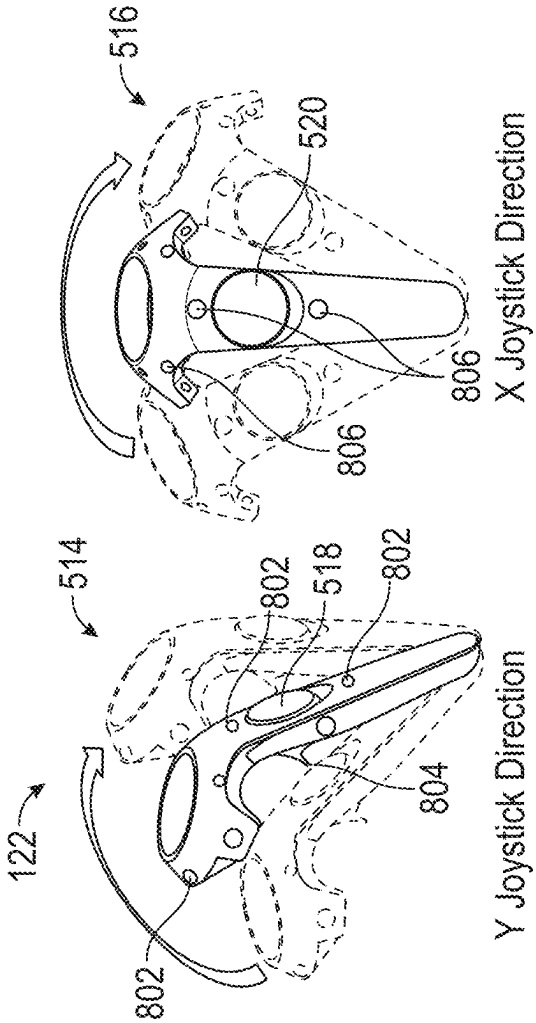
122
514
802
802
518
802
804
Y Joystick Direction
516
520
806
806
X Joystick Direction

FIG. 8B

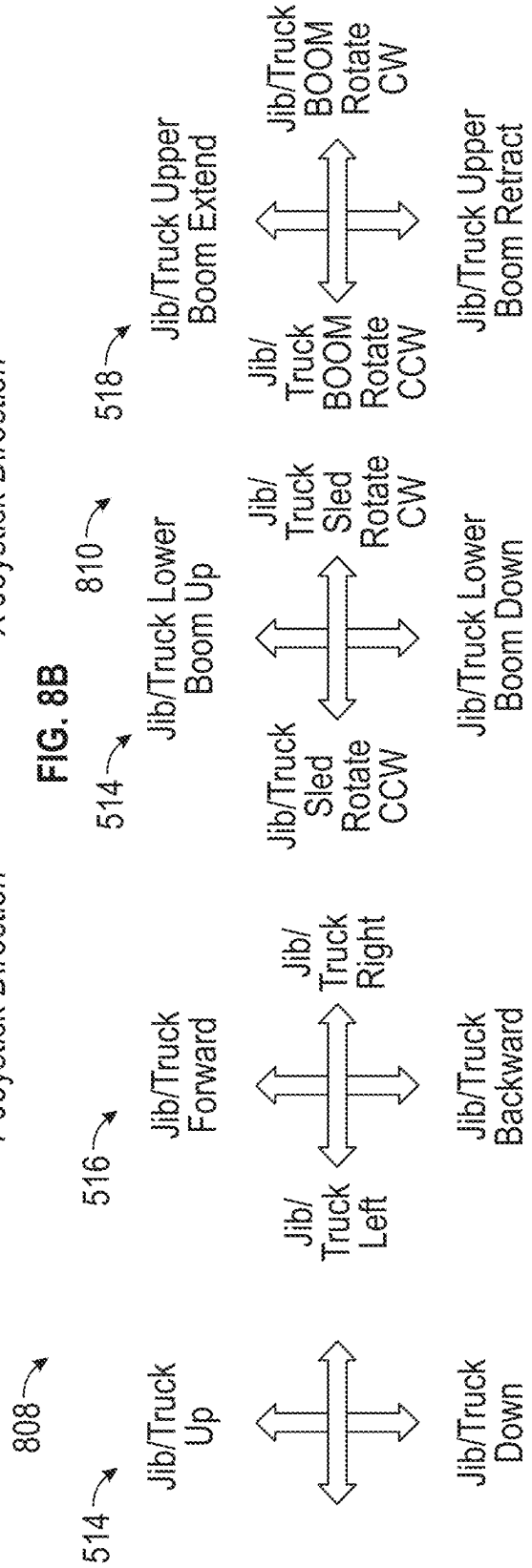
514
Jib/Truck Up
Jib/Truck Down
808
516
Jib/Truck Forward
Jib/Truck Backward
Jib/ Truck Left
Jib/ Truck Right
514
Jib/Truck Lower Boom Up
Jib/Truck Lower Boom Down
810
Jib/Truck Sled Rotate CCW
Jib/ Truck Sled Rotate CW
518
Jib/Truck Upper Boom Extend
Jib/Truck Upper Boom Retract
Jib/ Truck BOOM Rotate CCW
Jib/Truck BOOM Rotate CW

FIG. 8C

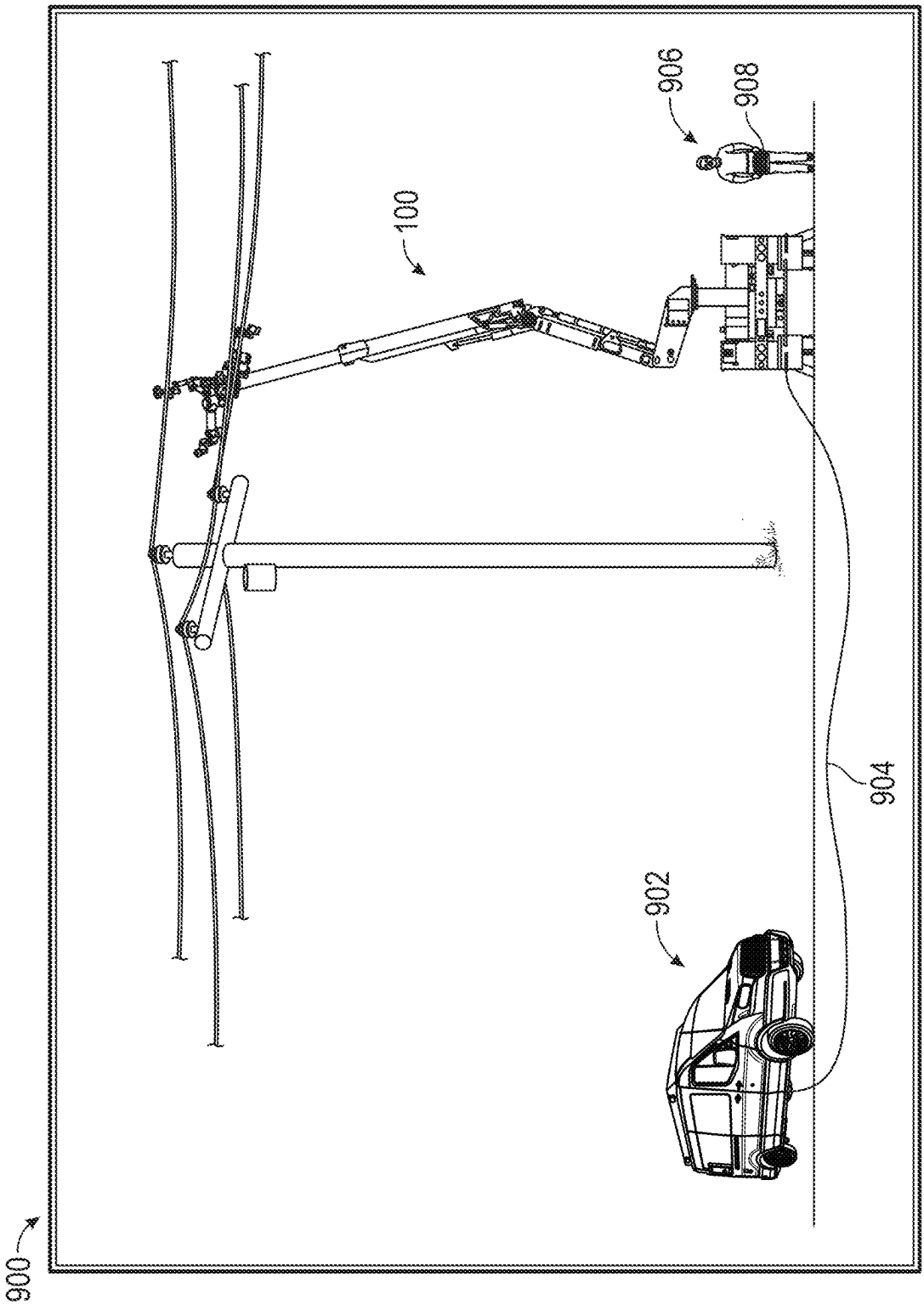

FIG. 9A

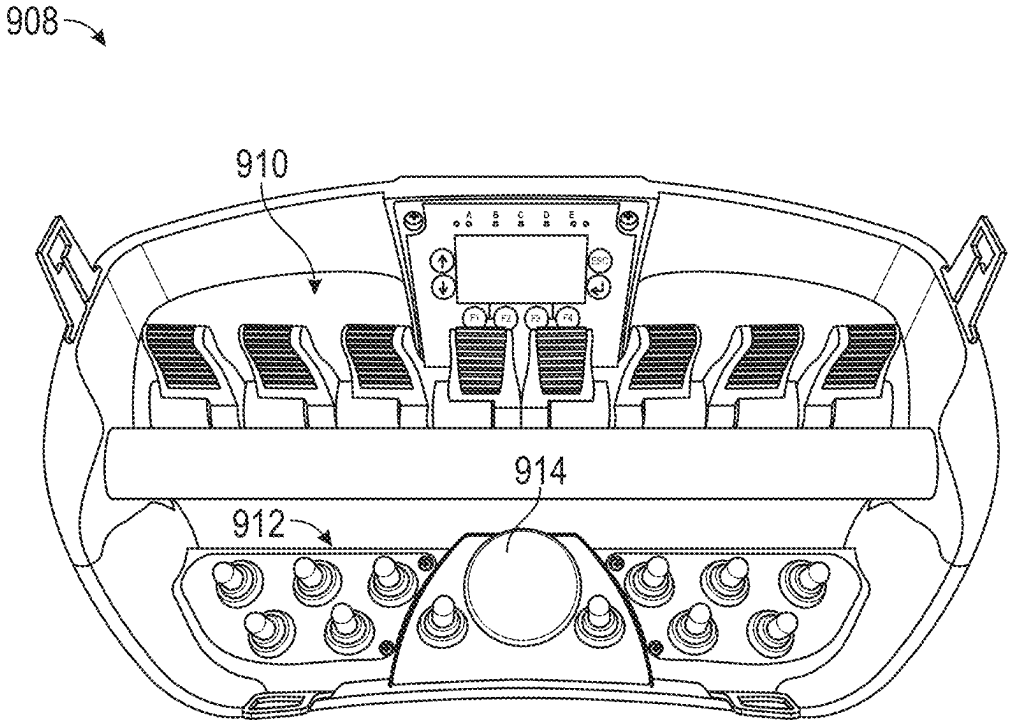

FIG. 9B

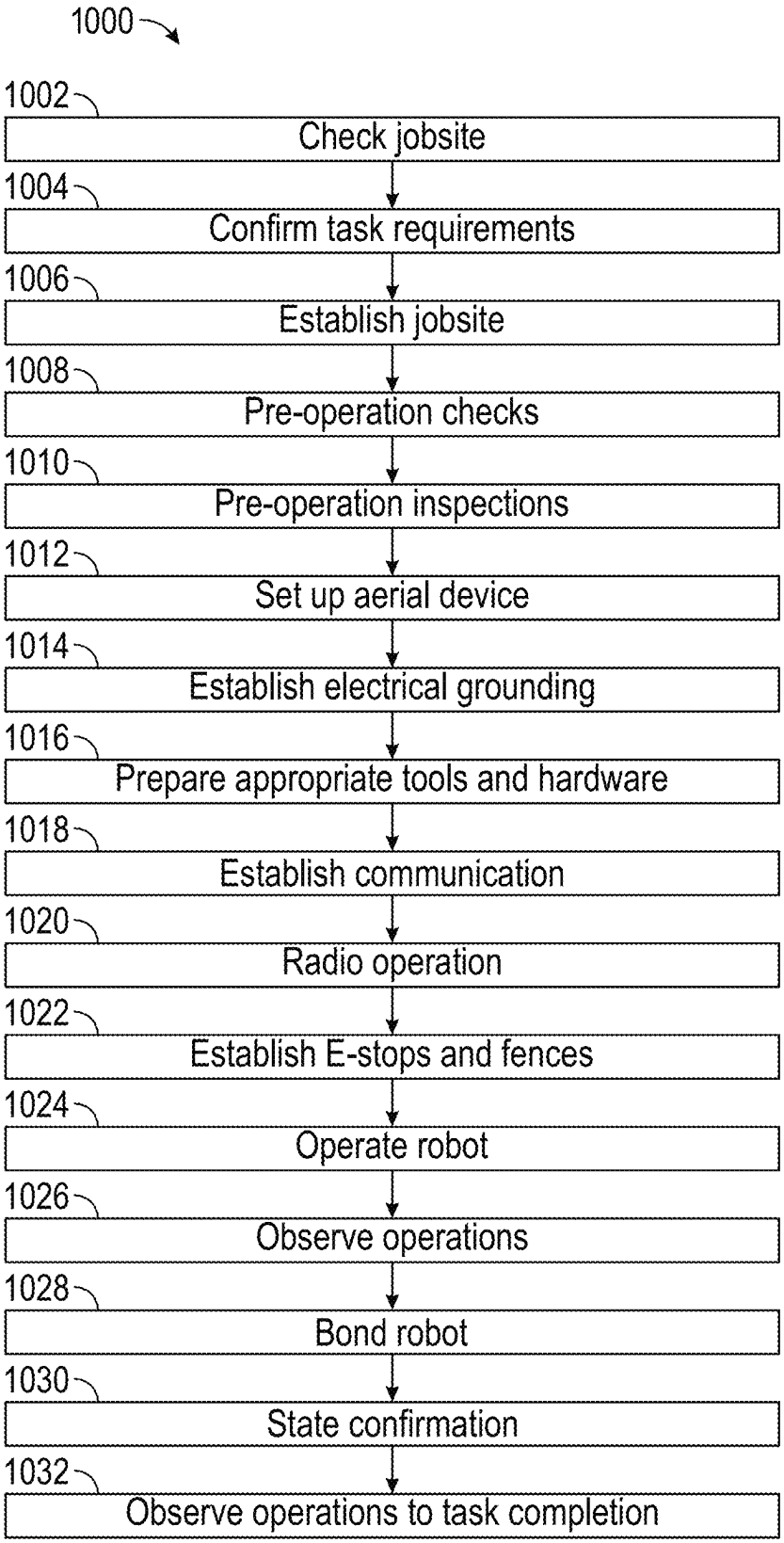
1000
1002
Check jobsite
1004
Confirm task requirements
1006
Establish jobsite
1008
Pre-operation checks
1010
Pre-operation inspections
1012
Set up aerial device
1014
Establish electrical grounding
1016
Prepare appropriate tools and hardware
1018
Establish communication
1020
Radio operation
1022
Establish E-stops and fences
1024
Operate robot
1026
Observe operations
1028
Bond robot
1030
State confirmation
1032
Observe operations to task completion

FIG. 10

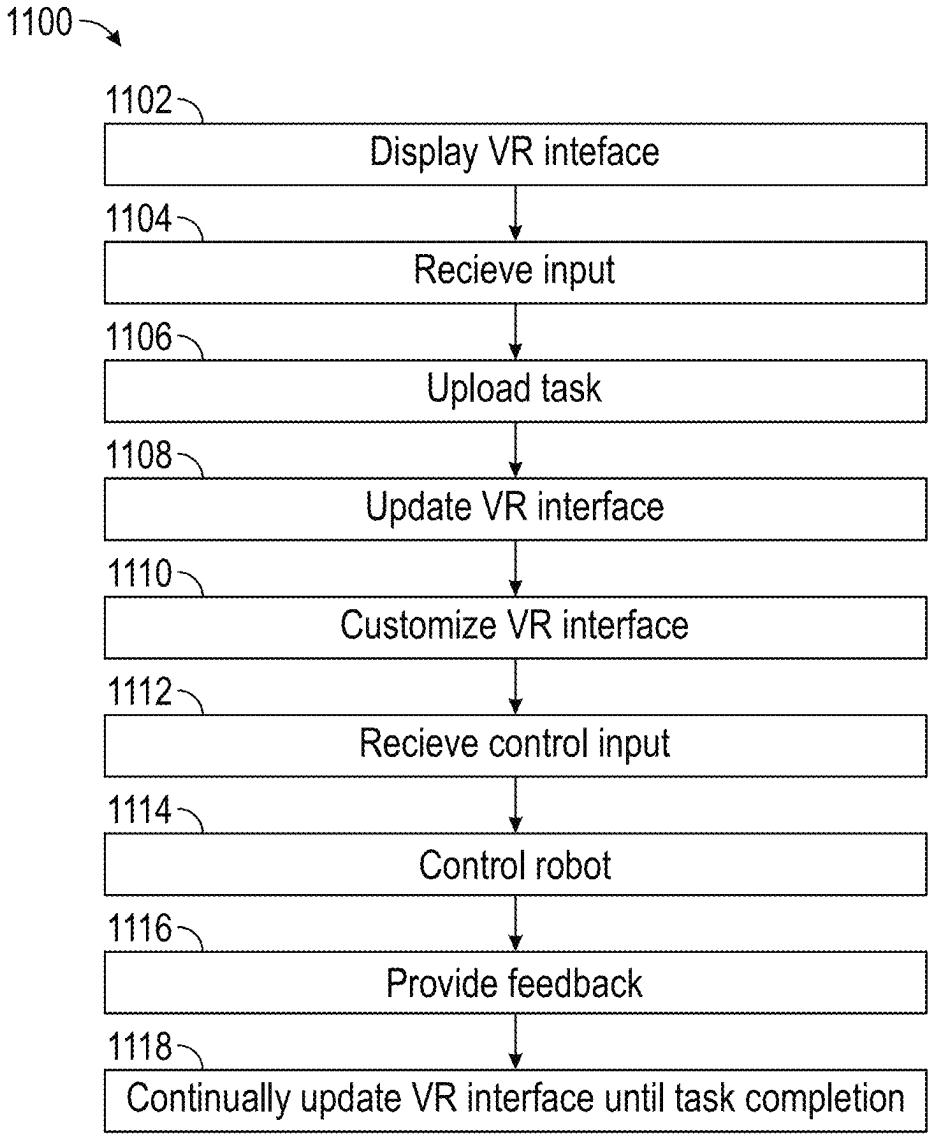
1100
1102
Display VR inteface
1104
Recieve input
1106
Upload task
1108
Update VR interface
1110
Customize VR interface
1112
Recieve control input
1114
Control robot
1116
Provide feedback
1118
Continually update VR interface until task completion

FIG. 11

INTUITIVE VIRTUAL REALITY INTERFACE FOR CONTROLLING ROBOTS

BACKGROUND

1. Field

Embodiments of the current disclosure relate to virtual reality interfaces. More specifically, embodiments of the current disclosure relate to systems and methods of providing intuitive virtual reality interfaces for controlling robots.

2. Related Art

Typically, telerobotics for conducting work require manual operation by operators using wired or wireless communication methods. The operators may stand at a remote location and control the robot to perform work-related tasks. The operator may observe the robot's actions by line of site or by a video feed provided on a display occasionally showing a perspective of the robot. These methods are limiting in that the operator may operate the robot while viewing a screen with a video feed with no options but to control the robot manually.

Alternatively, a robot may be programmed to perform a specific operation typically without the operators input. The operator may initiate the automation and observe while the robot carries out the automated actions. When the automation is complete, the operator may then set up the next automation and initiate the next automation. The set up between automations typically requires movement of a part or uploading a new set of instructions to carry out the next operation. This takes time and is labor intensive. Furthermore, when operating on power lines or telecommunication lines, robots may be in contact with high-energy lines requiring substantive work and time to change parts and upload new coding to perform automated actions.

What is needed are systems and methods of providing manual control and automated control of robots to complete work tasks by a single all-encompassing virtual reality user interface.

SUMMARY

Embodiments of the current disclosure solve the above-described problems and provide a distinct advance in the art by providing a user friendly customizable virtual reality interface for controlling robots.

An embodiment of the current disclosure is directed to a system providing a virtual reality user interface for use with a remotely controlled robot to complete a work task. The system includes a robot configured to perform work in a work environment, at least one camera associated with the robot and configured to provide a video feed, a display configured to display the video feed from the at least one camera, one or more input devices configured to receive inputs from an operator, at least one processor, and one or more non-transitory computer-readable media storing computer-executable instructions that, when executed by the at least one processor, perform a method of providing the virtual reality user interface. The method includes obtaining the video feed from the at least one camera, causing display of the video feed by the display, generating a menu including a plurality of icon features, causing display of the menu on the display and over the video feed, receiving, by the one or more input devices, a selection of an icon feature of the plurality of icon features of the menu, and initiating automated control of the robot based on the selection of the icon feature.

This summary is provided to introduce a selection of concepts in a simplified form that are further described below in the detailed description. This summary is not intended to identify key features or essential features of the claimed subject matter, nor is it intended to be used to limit the scope of the claimed subject matter. Other aspects and advantages of the current invention will be apparent from the following detailed description of the embodiments and the accompanying drawing figures.

BRIEF DESCRIPTION OF THE DRAWING FIGURES

Embodiments of the invention are described in detail below with reference to the attached drawing figures, wherein:

FIG. **1** depicts an exemplary aerial device and operator;

FIG. **2** depicts exemplary hardware configuration of the aerial device for some embodiments of the disclosure;

FIG. **3** depicts an exemplary robot unit for some embodiments of the disclosure;

FIG. **4** depicts an exemplary work environment of the robot unit;

FIGS. **5**A and **5**B depict an exemplary virtual reality interface providing a main menu and a flyout menu for some embodiments;

FIGS. **6**A and **6**B depict the virtual reality interface providing a flyout menu and coaching operations for some embodiments;

FIG. **7** depicts an exemplary foot pedal input;

FIGS. **8**A-**8**C depict exemplary operation of virtual input devices for some embodiments;

FIGS. **9**A and **9**B depict an exemplary arrangement of a jobsite for some embodiments;

FIG. **10** depicts an exemplary process of operator and foreman operator setting up a jobsite and conducting task operations; and

FIG. **11** depicts an exemplary process of operating robot system using the virtual reality interface.

The drawing figures do not limit the invention to the specific embodiments disclosed and described herein. The drawings are not necessarily to scale, emphasis instead being placed upon clearly illustrating the principles of the invention.

DETAILED DESCRIPTION

The following description of embodiments of the invention references the accompanying illustrations that illustrate specific embodiments in which the invention can be practiced. The embodiments are intended to describe aspects of the invention in sufficient detail to enable those skilled in the art to practice the invention. Other embodiments can be utilized, and changes can be made without departing from the scope of the invention. The following detailed description is, therefore, not to be taken in a limiting sense.

In this description, references to "one embodiment", "an embodiment", "embodiments", "various embodiments", "certain embodiments", "some embodiments", or "other embodiments" mean that the feature or features being referred to are included in at least one embodiment of the technology. Separate references to "one embodiment", "an embodiment", "embodiments", "various embodiments", "certain embodiments", "some embodiments", or "other

embodiments" in this description do not necessarily refer to the same embodiment and are also not mutually exclusive unless so stated and/or except as will be readily apparent to those skilled in the art from the description. For example, a feature, structure, act, etc., described in one embodiment may also be included in other embodiments but is not necessarily included. Thus, the current technology can include a variety of combinations and/or integrations of the embodiments described herein.

Generally, embodiments of the current disclosure provide a virtual reality system providing a virtual reality interface for controlling robots. In some embodiments, an operator may control a robot system comprising various operable robots to perform work-related tasks on power and telecommunication lines. The robot system may be disposed at a boom tip of an aerial device configured for powerline work. The operator may be positioned near the aerial device or at a remote location and operate the robot system in real time utilizing input devices and viewing the area through a headset display displaying a virtual reality interface.

In some embodiments, the virtual reality interface may display images in a video feed from various cameras capturing the work environment of the robot system. Furthermore, the virtual reality interface may display graphics comprising customizable and selectable menus and submenus configured to initiate action by the robot systems. Furthermore, the virtual reality interface may cause display of information related to the state of the aerial device and the robot system, current actions/tasks being performed, and future actions/tasks to be performed. The graphics may be displayed over the video feed such that the operator can see the work environment along with the graphics simultaneously.

In some embodiments, the graphics may present various selectable icon features associated with the virtual reality input devices of the virtual reality system. The operator may select inputs on the input devices to highlight and select the icon features of the virtual reality interface. Selection of the displayed icon features may result in activation of automated control programing to control the robot systems to perform automated tasks. Upon selection and upload of the work-related tasks, task scripts may upload and cause display of coaching screens, meta scripts, quick menus, and flyout menus by virtual reality interface. The graphics may provide instructions and selectable icons features based on the selected task. For example, a coaching screen and meta scripts may provide a list of actions and instructions for completing the tasks. A quick menu may display selectable icon features that initiate operations that are necessary to complete the tasks. Furthermore, flyout menu may provide automation options and tool selection icons that are necessary to complete the tasks. The virtual reality interface may be automatically populated with all options the operator. Furthermore, the operator may customize the options presented by utilizing a main menu to add and subtract icon features from the various menus.

Aerial Platform

FIG. **1** depicts an aerial device **100** relating to some embodiments. Aerial device **100** may be attached to utility vehicle **102**, as shown. In some embodiments, aerial device **100** comprises boom assembly **104** and turntable **106** that may be disposed on utility vehicle **102**, as shown. Boom assembly **104** may comprise lower boom section **108** attached to turntable **106** at a proximal end and upper boom section **110** pivotably attached to a distal end of lower boom section **108**, as shown. In some embodiments, either or both lower boom section **108** and upper boom section **110** may include a telescoping portion for telescopically extending and retracting the length of boom assembly **104**. Furthermore, in some embodiments, a utility platform may be included, attached at a distal end (or boom tip **112**) of upper boom section **110**. Alternatively, or additionally, in some embodiments, aerial robot system **300** may be disposed at boom tip **112** of upper boom section **110**. In some embodiments, and as described in greater detail below, aerial robot system **300** may be adapted for performing telecommunications repair, powerline repair, general repair work, or other actions that may be performed by a robot. For example, aerial robot system **300** may comprise one or more utility tools for performing actions such as sawing, cutting, screwing, wiring, or other actions associated with repair work. In some embodiments, boom assembly **104** may be used to position aerial robot system **300** in a remote location, such as, for example adjacent to an energized power line (e.g., aerial power system **402**) in aerial work environment **400**.

In some embodiments, aerial device **100** may be used for performing work on or near high-voltage power lines. As such, aerial device **100** may be operated near electrically powered high-voltage cables. In some embodiments, aerial robot system **300** and boom assembly **104** comprise insulating material for electrically insulating aerial device **100**. Furthermore, any electrical components disposed in a utility platform and on boom assembly **104** may be self-contained and separate from the electrical components of utility vehicle **102**. As such, a dielectric gap is created between aerial robot system **300** and utility vehicle **102**. In some embodiments, utility vehicle **102** may generally be referred to as a base, and may be any of a vehicle, a crane, a platform, a truck bed, a mechanical tree trimming apparatus, a hydraulic lift, or any other base capable of supporting boom assembly **104** and aerial robot system **300**, as will be described in further detail below.

In some embodiments, boom assembly **104** comprises one or more cylinders for controlling motion of boom assembly **104** such as lower boom cylinder **114** disposed between the turntable **106** and lower boom section **108** and upper boom cylinder **116** disposed between the lower boom section **108** and the upper boom section **110**, as shown. In some embodiments, lower boom cylinder **114** and upper boom cylinder **116** may be actuated hydraulically using a hydraulics system of the boom assembly **104**. However, embodiments are contemplated in which other suitable actuation techniques may be employed to actuate the cylinders such as, for example, electrical actuation, pneumatic actuation, and magnetic actuation. Furthermore, in some embodiments, a combination of different actuation techniques may be used. Embodiments are contemplated in which boom assembly **104** comprises one or more rotary actuators. For example, in some embodiments, boom assembly **104** comprises a slew drive for controlling rotation of any respective joints of the boom assembly **104** as described in more detail below.

In some embodiments, lower boom cylinder **114** may control an angle of rotation of lower boom section **108** relative to turntable **106**. Similarly, upper boom cylinder **116** may control an angle of rotation of upper boom section **110** relative to lower boom section **108**. Additionally, in some embodiments, pivotable connection **118** may be included at boom tip **112** between the distal end of upper boom section **110** and aerial robot system **300** for controlling the angle of aerial robot system **300**. In some such embodiments, pivotable connection **118** may be configured to automatically maintain an upright orientation of aerial robot system **300**. For example, pivotable connection **118** may include one or more gyroscopes, accelerometers, strain gauges, and the like

and/or interface with a control system for maintaining the upright orientation of aerial robot system **300** such that aerial robot system **300** is held in an upright position regardless of the orientation of boom assembly **104**. Additionally, or in the alternative, embodiments are contemplated in which the orientation of aerial robot system **300** may be controlled manually by operator **120** using input devices **122** and head-up display **124**.

Aerial Robot System

FIG. **2** depicts exemplary block diagram **200** related to embodiments of the present disclosure. In some embodiments, aerial robot system **300** comprises various assemblies, sub-assemblies, parts, or components for capturing sensory information and/or for performing actions, such as repair work in a telecommunication setting. In some embodiments, aerial robot system **300** comprises remote assembly **202** depicted in FIG. **2**. Aerial robot system **300** may comprise various circuitry, parts, or other components for capturing sensory information, including video, three-dimensional depth information, audio, and other sensory data. Furthermore, aerial robot system **300** may comprise a manually controlled or autonomous robot unit that may be positioned at boom tip **112** of boom assembly **104** for interacting with aerial power system in aerial work environment **400** (FIG. **4**) to perform one or more tasks. For example, as described above, in many real-life scenarios, tasks to be performed may not be discovered until reaching the jobsite, and/or detecting the aerial work environment, and accordingly, the robot unit may comprise a variety of tools, features, or functions to respond to a variety of tasks. Additionally, as described in greater detail below, aerial robot system **300** may further comprise one or more parts, components, or features for providing operator **120** with sensory information, providing operator **120** with additional information about aerial work environment to improve efficiency for both the aerial robot system **300** and operator **120**.

As depicted in block diagram **200**, aerial robot system **300** comprises remote assembly **202**, remote capture device **210**, computer **260**, and control system **280**. In some embodiments, and as described in greater detail herein, remote capture device **210** may be configured and adapted for the capturing of sensory information and may be positioned in the aerial work environment on one or more robots (e.g., robot unit **302** and auxiliary arm **304**) for capturing of sensory information that may be utilized by computer **260**, to present information to operator **120** via control system comprising input devices **122** and head-up display **124**, among other purposes. FIG. **2** depicts exemplary sensors, cameras, and other apparatuses that may be utilized by remote capture device **210** for the capturing of sensory information. Remote capture device **210** may be mounted or positioned on a selectively movable mount or portion of aerial robot system **300**. For example, aerial robot unit **302** may be positioned at boom tip **112** of a boom assembly **104** for aerial application. However, remote capture device **210** may also be used with a robot unit that is not attached to boom assembly **104**, and for example, may be utilized with a robot unit for ground application or attached to a mechanical arm (e.g., auxiliary arm **304**) or an aerial drone. Accordingly sensory information may be captured by remote capture device **210** at any location.

Through selective inputs, including both manually inputted instructions and/or automated instructions, remote capture device **210** may capture video, still images, three-dimensional depth information, audio, electrical conductivity, voltage, among other information that may be captured by a sensor or recording device. For example, remote capture device **210** may comprise camera **212** for the capturing of video or still images (collectively, "video"). In some embodiments, camera **212** may be at least one camera or a plurality of cameras. Camera **212** may be positioned on remote capture device **210** for the capturing of video within a selected field of view. The resolution of the video captured by camera **212** may vary, but in some embodiments, camera **212** may be configured for capturing in at least 720p resolution but may capture in higher resolution including but not limited to 1080p, 2K, 4K, or 8K resolution. However, it will be appreciated that camera **212** may be any currently known or yet to be discovered camera for capturing video. Video captured from camera **212** may be stored locally at remote capture device at a local memory **214**. Local memory **214** may be any of the storage or memory described below with respect to FIG. **7**. The storing of video and other sensor data at local memory **214** may aid in providing a failsafe or backup storage of captured video in the event of a transmission or upload failure. Further, the storing of video and sensor data at local memory **214** may aid in situations of poor wireless connection or if a direct line becomes loose or interrupted, preventing the immediate transmission of captured video. Optionally or additionally, video captured from camera **212** and other sensor data may be transmitted to computer **260** for processing, analyzing, storage, and/or for later transmitting to control system **280**. In further embodiments, video captured from camera **212** may be directly transmitted to control system **280** for processing.

In some embodiments, remote capture device **210** may further comprise at least one three-dimensional camera **216** or other device configured for capturing three-dimensional depth information. As described in greater detail below, three-dimensional camera **216** may be utilized for capturing three-dimensional depth information within a field of view for creating a point cloud, 3-D model, or other digital representation of an object or area scanned or viewed by three-dimensional camera **216**. Three-dimensional camera **216** may be operated in conjunction with, or independent from camera **212** or other components or parts of remote assembly **202** and/or remote capture device **210**. As described in greater detail below, in response to instructions or an input, three-dimensional camera **216** may begin capturing three-dimensional depth information about an object or area within a field of view. Like the captured video with respect to camera **212**, the three-dimensional depth information captured by three-dimensional camera **216** may be saved locally at local memory **214**. In some embodiments, remote capture device **210** may comprise a separate local memory **214** for video captured by camera **212** and a separate local memory **214** for three-dimensional information captured by three-dimensional camera **216**. As described in greater detail below, remote capture device **210** may comprise a microphone **218** and/or sensor **220**, which may be one or more or a plurality of sensors, for capturing additional sensory information. Accordingly, in some embodiments, a separate and distinct local memory **214** may be used for each sensory capture device (i.e., camera **212**, three-dimensional camera **216**, microphone **218**, and/or sensor **220**). In further embodiments, remote capture device **210** may comprise single memory **214** for the storing of all captured sensory information. As described above and in further embodiments, three-dimensional information may be directly sent to computer **260** in addition to or instead of storing locally at memory **214**.

In addition to capturing video and/or three-dimensional information, it may also be advantageous for remote capture device **210** to capture additional sensory information that

may be presented to operator **120** and/or processed by computer **260** for autonomous control. For example, in certain scenarios it may be advantageous for remote capture device **210** to capture audio via at least one microphone **218**. Continuing with the running example, remote assembly **202** for use with telecommunications repair may utilize audio information for diagnostic or safety purposes. For example, audio information may capture the sounds of the jobsite and/or aerial work environment, and audio information may be processed to determine a state of the jobsite. Accordingly, in some embodiments, remote capture device **210** may comprise at least one microphone **218** for the capturing of audio information. Similar to the video and three-dimensional information as described above, captured audio information may be stored locally at memory **214** and/or transmitted to computer **260** and/or control system **280**.

Similar to audio information, remote capture device **210** may further comprise sensor **220** for the capturing of additional sensory information, metrics, and/or data. For example, continuing with the running example, remote capture device **210** may be used with remote assembly **202** positioned at the end of boom assembly **104** for telecommunication or powerline work on aerial power system **402** in aerial work environment **400**. In such a work application, remote assembly **202** may be working on or near live powerline or other conductive lines transferring electricity. Accordingly, in some embodiments, remote capture device **210** may comprise sensor **220** configured as an electricity sensor measuring current, voltage, and/or a magnetic field for determining whether a cable or powerline has electricity running through it. However, it will be appreciated that remote capture device **210** may comprise additional sensors configured and adapted for providing remote capture device and/or remote assembly **202** with additional information. By way of non-limiting example, sensors may be sensor **220**, in some embodiments, comprising any of the following sensors/devices: a gyroscope, an accelerometer, a thermometer, a barometer, a light emitter, a photodiode, a voltmeter, an ammeter, a magnetic field sensor, a strain gauge, a pressure gauge, among other sensors/devices that may be utilized in the intended application of remote assembly **202**.

In some embodiments, remote assembly **202** may further comprise at least one digital hub **222**. In some embodiments, remote assembly **202** further comprises at least one digital hub **222**. Digital hub **222** may receive the captured sensory information from remote capture device and convert the captured sensory information into a format suitable for transmitting to computer **260** and/or control system **280**. In some embodiments, digital hub **222** is a USB Hub, such as, for example, a USB 3.0, ethernet switches, and/or future advancements.

As further depicted in FIG. **2**, remote assembly **202** may further comprise controller **224**. In some embodiments, controller **224** may be one or more processors or other circuitry or computer hardware for receiving commands or instructions from control system **280** and/or computer **260** and for relaying or providing commands to remote capture device **210** and/or motion controls **230**. Accordingly, in some embodiments, instructions or commands from controller **224** may be sent to remote capture device **210**. For example, instructions sent from controller **224** to remote capture device **210** may include instructions to begin recording video via camera **212** (e.g., robot camera **426**). However, it will be appreciated that instructions sent from controller **224** may cause any of the components of remote capture device **210** to begin capturing sensory information, including but not limited to three-dimensional information, audio information, or other sensory information captured by any of the sensors **220** of remote capture device **210**. Additionally, controller **224** may be used to send instructions to cause remote assembly **202**, remote capture device **210**, and/or motion controls **230** to perform other actions corresponding to the instructions. For example, instructions from controller **224** may instruct remote capture device **210** to store captured sensory information on memory **214**. Additionally, instructions from controller **224** may be sent to motion controls **230** to instruct remote assembly **202** to perform a movement. Further, controller **224** may be in communication with transceiver **244** for communicating with computer **260** and/or control system **280** to send sensory information or other data or information to computer **260** and/or control system **280**. Similarly, controller **224** may further be configured for receiving instructions, commands, or other information from computer **260** and/or control system **280**.

As further depicted in the block diagram of FIG. **2** and in some embodiments, remote assembly **202** may further comprise motion controls **230**. Motion controls **230** may be configured and adapted for controlling the movement of remote assembly **202**, including any utility arms or camera mounts as described in greater detail below. In some embodiments, remote assembly **202** may comprise a 6 DOF robot unit configured with utility arms and/or camera mounts that can move with 6 DOF. Accordingly, motion controls **230** may be configured to provide instructions or commands to remote assembly **202** to move in 6 DOF. In some embodiments, motion controls may comprise x-axis control **232**, y-axis control **234**, z-axis control **236**, pitch control **238**, yaw control **240**, and/or roll control **242** for moving remote assembly **202** with 6 DOF. It will be appreciated however, that remote assembly **202** may comprise varying designs, and in some embodiments, may move in fewer than 6 DOF. Accordingly, in further embodiments, motion controls **230** may comprise controls configured and adapted for moving remote assembly **202** in an appropriate number of planes. Furthermore, as shown in FIG. **3**, robot unit **302** may comprise a plurality of joints providing various locations for that may each provide 6 DOF movements.

As described above, motion controls **230** may be in communication with controller **224**. Instructions or commands from controller **224** may be sent to motion controls **230**. Upon receipt of the instructions, the corresponding controls **232**, **234**, **236**, **238**, **240**, and/or **242** may be instructed to cause movement of remote assembly **202** based on the received instructions. As described above, one or more arms or limbs of remote assembly **202** may be configured to move with 6 DOF. Based on the instructions, the corresponding motion controls **230** may cause movement of remote assembly **202** to correspond to the instructions.

As described above, remote assembly **202** may be communicatively coupled to computer **260**. In some embodiments, computer **260** may be directly coupled to remote assembly **202**, such that computer **260** and remote assembly **202** are a combined system. For example, computer **260** may be directly installed into a frame or body of remote assembly **202**. Accordingly, remote assembly **202** and computer **260** may be in direct communication through cables or other direct methods. In further embodiments, computer **260** may be located external to remote assembly **202**. When located externally, remote assembly **202** and computer **260** may nevertheless be communicatively coupled. For example, in some embodiments, remote assembly **202** and computer **260** may be coupled through a physical connection such as a fiber optic cable, an Ethernet cable, and/or USB cable. In further embodiments, remote assembly **202** and computer

260 may be coupled through a wireless connection, such as WIFI, Bluetooth®, cellular connection, or another wireless connection. In embodiments in which computer 260 and remote assembly 202 are connected through a wireless connection, transceiver 244 may communicate with another transceiver 250 coupled or otherwise in communication with computer 260.

In some embodiments, computer 260 may receive and process sensory information captured by remote capture device 210 of remote assembly 202. Accordingly, computer 260 may comprise at least a processor 262 for executing commands, which may include instructions for processing, analyzing, or utilizing captured sensory information. For example, as described in greater detail below, computer 260 may utilize captured three-dimensional information to generate a point-cloud, three-dimensional model, or other digital representation of an object or area captured by remote capture device 210.

In some embodiments, control system 280 may be an interface, apparatus, or system providing a user with an interactive medium for interacting with computer 260 and/or remote assembly 202. For example, in some embodiments, control system 280 may comprise at least one processor 282, at least one controller 284, at least one display 288, at least one sensor 290, and at least one transceiver 292. In some embodiments, processor 282 may comprise a server capable short-range, local network, and wide area network communication As described in greater detail below, some embodiments of the present teachings provide for a method of controlling remote assembly 202 from a remote location. Continuing with the running example, oftentimes telecommunications repair or powerline repair sometimes occur during or immediately after a severe weather storm. This type of scenario can include dangers such as exposed and live powerlines, high winds, lightning, and other dangers that pose a risk to human workers. Accordingly, it may be advantageous for an operator of remote assembly 202 to control remote assembly 202 in a safe location, such as in a work truck or building away from the jobsite. Accordingly, control system 280 may comprise at least one controller 284, providing interactive systems and methods for a user to input commands or instructions for controlling or manipulating remote assembly 202.

Controller 284 may be any interface for inputting commands or instructions that can be transmitted and processed by a computer or other hardware. By way of non-limiting example, controller 284 may comprise hand-held motion control controllers and interface controllers (e.g., input devices 122). As described in greater detail below, the motion control controllers may be beneficial for operator 120 to perform specific movements or actions that can be captured and relayed to remote assembly 202 to perform. Through the use of motion-control controllers, operator 120 may be provided with a sensory effect similar to being at the jobsite and performing the actions themselves. However, controller 284 is not limited to motion controls and instead, controller 284 may be any interface (e.g., input devices 122) for operator 120 to input instructions or commands for remote assembly 202. For example, in further embodiments, controller 284, which may be input devices 122, may be a handheld controller, similar to that of a video game controller comprising thumbsticks, buttons, triggers, and/or other interfacing inputs. In further embodiments, controller 284 may comprise a joystick and button design. In even further embodiments, controller 284 may be a mouse and keyboard. In even further embodiments, controller 284 may be configured as a glove or interactive model of a hand, allowing an operator to perform native hand manipulations which may be captured and transmitted to remote assembly 202. In even further embodiments, controller 284 may comprise a camera component or other motion capture component for capturing the movement of an operator. For example, in addition to, or in place of a physical controller handled by the operator, a camera component may capture the movement of the operator. The captured movement may be transmitted to computer 260 for translation or mapping movement of remote assembly 202. Optionally, or additionally, motion capture aids, such as motion capture dots, may also be used for capturing movement of the operator. In some embodiments, it will be appreciated that the examples provided herein are intended to be illustrative, rather than limiting, and that controller 284 may be any apparatus or method of receiving instructions or an input from an operator.

In some embodiments, control system 280 may further comprise a power medium 286 for powering one or more parts or components of the control system, including for example controller 284, display 288, or the at least one sensor 290, or any combination thereof. In some embodiments, a single power medium may power all parts or components of control system 280. In further embodiments, individual parts or components of control system 280 may comprise a separate and distinct power medium 286. For example, first power medium 286 may be used for powering controller 284 and a second power medium 286 may be used for powering display 288. Power medium 286 may be any conventionally known power source for providing power to an electrical device, including but not limited to an internal power source such as a battery, or an external battery source such as an electrical outlet.

As further depicted in FIG. 2, control system 280 may further comprise at least one display 288. In some embodiments, display 288 may be a monitor, touchscreen, television screen, or other display with reference to FIGS. 5A-5B and 6A-6B described below. In some embodiments, at least a portion of the captured sensory information from remote capture device 210 may be displayed on display 288, which may be head-up display 124 in some embodiments for operator 120 to view. For example, captured video may be displayed on display 288. Providing sensory information on display 288 may provide an operator with a more immersive feel when remotely operating remote assembly 202. Through a real-time video feed, operator 120 may experience the jobsite as if operator 120 was physically present, even if operator 120 is in a safe location miles away. Additionally, providing sensory information to operator 120 via display 288 may aid operator 120 in inputting instructions or commands via controller 284.

In some embodiments, control system 280 may further comprise at least one sensor 290, which may provide additional sensory affect to the operator 120 and/or capture additional inputs that may be used by computer 260 to provide instructions to aerial robot system 300. In some embodiments, one or more sensors may be combined with controller 284 and/or one or more sensors may be combined with display 288. For example, in some embodiments, sensor 290 may be at least one speaker or sound emitting device to provide operator 120, foreman operator 906 (FIG. 9), and any other local or remotely positioned person, with audio information captured from remote capture device 210 or pre-recorded or pre-rendered audio. In further embodiments, the at least one sensor 290 may be one of an accelerometer, a gyroscope, a light sensor, or any other type

of sensor **290** suitable to detect the viewing angle of the user or the movement, position, or angle of the operator's body.

In some embodiments, and as described in greater detail below, operator **120** may utilize controller **284**, display **288**, and the at least one sensor **290** to provide instructions to remote assembly **202**, which may be analyzed and translated into instructions to cause remote assembly **202** to move or perform an action. As also described in greater detail below, operator **120** may input instructions or commands through control system **280**, which may be input devices **122**. In some embodiments, inputs may be inputted or captured by a combination of controller **284** and display **288**. For example, display **288** may be coupled to a head-mounted unit (e.g., head-up display **124**) as described in greater detail below. Operator **120** may move their head or torso with sensor **290** capturing the movement and/or viewing angle of operator **120**. The captured movement data or viewing angle may be sent to computer **260** via transceiver **292**, and computer **260** may take the captured movement data or viewing angle and translate into instructions for causing remote assembly **202** to move and mimic or replicate the operator's movement and match the viewing angle of the operator.

Aerial Work Environment and Aerial Robot Systems

FIGS. **3-4** illustrate an exemplary aerial robot system **300** comprising robot unit **302** and a high-capacity manipulator or auxiliary arm **304** in accordance with embodiments of the present disclosure. As shown, robot unit **302** may comprise first utility arm **306***a*, second utility arm **306***b*, and a camera mount **308**, in some embodiments comprising camera **212**. In some embodiments, utility arms **306***a*, **306***b* may be configured to perform work operations, such as removing and installing parts (e.g., insulators) on a utility pole. In some embodiments, camera mount **308** is a camera-supporting robotic arm to which camera **212** is coupled and that provides operator **120** a view of the remote location as if operator **120** was themselves in the remote location. Utility arms **306***a*, **306***b* and camera mount **308** may be coupled to central hub **310**. Central hub **310** may have dimensions approximating a human torso such that utility arms **306***a*, **306***b* extend off opposite lateral sides of central hub **310** to mimic the arms of operator **120**, while camera mount **308** may extend off a top surface of central hub **310** to mimic the head of operator **120**, thereby allowing operator **120** to operate robot unit **302** in a manner that mimics that operator **120** was in the remote location performing the energized power line work.

As described above, robot unit **302** may be adapted for performing repair work, maintenance work, or other similar situation, tasks, or actions. To perform these actions, robot unit **302** may comprise at least one utility arm generally references as utility arms **306***a*, **306***b*. Like camera mount **308** as described above, each of utility arms **306***a*, **306***b* may comprise a plurality of utility arm segments **314** that may be separated by pivotable joints **316**, which may be motorized and, in some embodiments, prismatic joints. The number and size of utility arm segments **314** and pivotable joints **316** may vary depending on the embodiments and application of robot unit **302**. Generally, in response to an instruction or commands, one or more of pivotable joints **316** may activate to rotate or move utility arms **306***a*, **306***b*. In some embodiments, the pivotable joints **316** may be used to move utility arms **306***a*, **306***b* in the X-axis, Y-axis, Z-axis as well as control the roll, pitch, and yaw of utility arm **306***a*, **306***b*. Accordingly, through movement in the 6 DOF, each utility arm **306***a*, **306***b* may mimic or replicate the movement of arms and hands of operator **120**.

In some embodiments, the distal ends **318** of utility arms **306***a*, **306***b* may comprise one or more tools, flanges, or other apparatus for performing an action such as repair work. In some embodiments, distal ends **318** may comprise an adapter or may be otherwise configured for accepting a tool. In some embodiments, operator **120** may manually replace tools or operator **120** may initiate automated actions to replace tools as described below.

In some embodiments, aerial robot system **300** may comprise auxiliary arm **304**. Auxiliary arm **304** may work in or near the same lateral plane as utility arms **306***a*, **306***b*. Providing an exemplary jib **312** in such a side-by-side configuration with utility arms **306***a*, **306***b*, may reduce the overall envelope of aerial robot system **300** as compared to an over-the-top arm. That is, robot unit **302** and auxiliary arm **304** in a side-by-side configuration may be maneuverable through tight spaces (e.g., between phases of aerial power system **402**) because the height of aerial robot system **300** is reduced.

In some embodiments, robot unit **302** may be supported, or disposed on and coupled to platform **322**. Furthermore, auxiliary arm **304** may be coupled to platform **322** by coupling assembly **320**. Platform **322** may provide a frame for supporting the other components of aerial robot system **300**. That is, platform **322**, in some embodiments, provides a structural framework connecting all components of aerial robot system **300** to boom assembly **104**. In some embodiments, platform **322** may be coupled to pivot joint **346**.

As shown, pivot joint **346** may comprise a slew drive system actuatable to maintain a level configuration of aerial robot system **300**. For example, sensors **290** may comprise an inertial measurement unit (IMU) comprising accelerometers, gyroscopes, and the like. The sensor data may be obtained and processed by remote assembly **202** and output slew drive commands to maintain a level configuration of aerial robot system **300** relative to a measured gravity vector. In this way, aerial robot system **300** may maintain a level configuration.

In some embodiments, coupling assembly **320** may connect auxiliary arm **304** to an underside of robot unit **302**, platform **322** (e.g., structure frame) below a receptacle **324** (discussed further below). Coupling assembly **320** may comprise linkages, joints (e.g., pivot joints), and the like to connect auxiliary arm **304** to platform **322** further supporting robot unit **302**. In some embodiments, coupling assembly **320** may comprise auxiliary actuators **326**, which, in some embodiments, may be slew drives (as shown), a rotator linkage, linear actuators, and the like. In some embodiments, coupling assembly **320** is configured to provide auxiliary arm **304** with one-, two-, three-, four-, five-, or six-degrees of freedom. Auxiliary actuators **326** may be actuated by motors **328** providing movement to auxiliary linkages and auxiliary arm **304**. Auxiliary commands to control the movement of auxiliary actuators **326** may be provided by operator **120** utilizing input devices **122** and/or automated controllers based on automated algorithms described herein.

Auxiliary arm **304** may also comprise end effector **332**, which may be interchangeable with other end effectors such that an appropriate end effector may be selected based on the work task to be performed. For example, as shown below in FIG. **4**, end effector **332** may be a vise (or other coupler) that couples to an energized phase **408** to electrically bond robot unit **302** to the energized phase **408** for performing maintenance work on energized components of the aerial power system **402**. Auxiliary arm **304** may further be configured to,

for example, move phase **408** out of the way of robot unit **302** while robot unit **302** performs work on other power line components.

In some embodiments, robot unit **302** may comprise tool rack **334** and parts holder **338**. Tool rack **334** may store tools that are usable by utility arms **306***a*, **306***b* for operating on aerial power system **402** in aerial work environment **400** and may include pin pullers (e.g., for decoupling a pinned connection as discussed further below), gripper tools for grabbing an object, and any other tools generally used in aerial line maintenance and repair that are adapted to connect to utility arms **306***a*, **306***b*, and/or auxiliary arm **304**. In some embodiments, utility arms **306***a*, **306***b* may be configured to automatically retrieve tools from tool rack **334** and put away tools into tool holders **336**. For example, responsive to receiving an instruction to retrieve or store a tool, aerial robot system **300** may automatically perform the instructed action without requiring any further input from operator **120**. Tool rack **334** is discussed in more detail below.

In some embodiments, parts holder **338** may hold parts that aerial robot system **300** may use during a work operation in work environment **400**, such as parts to be installed onto a utility pole. For example, parts holder **338** may hold an insulator that may be automatically retrievable by utility arms **306***a*, **306***b* for installation onto the utility pole. Parts holder **338** is discussed in more detail below.

In some embodiments, aerial robot system **300** further comprises utility box **340**. Utility box **340** may be disposed on and coupled to platform **322**. As such, utility box **340** may rotate along with platform **322** by pivot joint **346** described above. Utility box **340** may provide a housing configured to contain power systems **342** as well as sensors and computing hardware systems described below and illustrated in FIG. **7**. As such, utility box **340** may provide all power, electrical, hydraulic, and pneumatic systems necessary to carry out the processes described herein.

Power system **342** which may be batteries, motors generating hydraulic, pneumatic, electric, and mechanical energy, and the like. Any power system that may be necessary in carrying out the descriptions herein may be power system **342**. Furthermore, electronics package **344**, which in some embodiments, may comprise the hardware system of FIG. **7** as well as any sensors and controllers described herein may be housed in or communicatively connected to electronics package **344** of utility box **340**.

In some embodiments, aerial robot system **300** may comprise alternate auxiliary arm **366**. Alternate auxiliary arm **366** may extend from a front side of robot unit **302** coupled to platform **322** below central hub **310**. In some embodiments, alternate auxiliary arm **366** may provide a known length that operator **120** may use as a reference when controlling aerial robot system **300** to approach energized components in aerial work environment **400**. Furthermore, alternate auxiliary arm may comprise components such as, shaft **368**, implement **370**, and auxiliary actuator **372** to perform operations. Alternate auxiliary arm **366** is discussed in more detail below and illustrated in FIGS. **5**A-**5**B.

All parts of aerial robot system **300** described in reference to FIG. **3** may be controlled by operator **120** utilizing input devices **122** and/or all parts may of aerial robot system **300** may be automatically controlled to perform stored instructions when initiated by operator **120** selecting icons displayed on virtual reality display **500** described below.

In some embodiments, as depicted in FIG. **4**, specialized tools **360** may be used to couple to manipulators located at a distal end of each of utility arms **306***a*, **306***b* and auxiliary arm **304**. For example, insulator **404** may be adapted to provide a long rod portion for ease of gripping by high-dexterity clamp **418**. Furthermore, insulator **404** may be fashioned with ring bolts such that robot unit **302** may utilize high-dexterity clamp **418** for grabbing and rotating. Furthermore, tools **360** may comprise various hot-stick tools, which may be adapted to couple to the manipulators (e.g., utility arms **306***a*, **306***b*, and auxiliary arm **304**) to provide ease of use. Hot-stick ring tools may be provided in various sizes to be used in tie-wire wrapping and unwrapping and hot line hooks may be used to simplify snagging a cable. Similar to high-dexterity clamp **418**, a 4-bar linkage gripper may be adapted or configured to be coupled to manipulators providing high-capacity gripping. Further, a phase cutter (not shown) may be modified to couple to utility arms **306***a*, **306***b* and/or auxiliary arm **304**. Furthermore, a clamp, tool adapter, and manipulator adapter may be used to couple tools **360** to the manipulators and to various tool holders when tools **360** are not in use as described above.

Here, high-dexterity clamp **418** may be clamped onto insulator **404** while auxiliary arm **304** is coupled to phase **408** by one of the various tools **360**. Auxiliary arm **304** may hold phase **408** while robot unit **302** removes insulator **404** from crossmember **412**. Various tools may be necessary for this task, and robot unit **302** may exchange tools **360** as needed by placing disposing tools onto tool rack **334** and removing other tools from tool rack **334**. Furthermore, auxiliary arm **304** may bond onto aerial power system **402** by bonding unit **424**.

In some embodiments, operator **120** may control robot unit **302** and auxiliary arm **304** to remove an aerial component (e.g., insulator **404**) that needs to be replaced. Continuing with the exemplary embodiment described above, operator **120** may control auxiliary arm **304**, or operator **120** may initiate an automated task by selecting icons on VR interface **502** to grasp and bond to phase **408** and control utility arms **306***a*, **306***b* to remove nuts, bolts, and tie wires, to remove phase **408** from insulator **404** and to remove insulator **404** from crossmember **412**. Removal of insulator **404** may be performed by operator **120**, automatically by preprogramed control algorithms (e.g., automated tasks), or by a combination of the two. For example, as shown in FIG. **4**, insulator **404** may be held by first utility arm **306***a* using high-dexterity clamp **418** while auxiliary arm **304** holds phase **408** and second utility arm **306***b* may remove wire ties to release insulator **404** from phase **408**. Once phase **408** is released, second utility arm **306***b* may remove nuts and bolts utilizing a ratchet and drill tool (not shown) to release insulator **404** from crossmember **412**.

After insulator **404** has been removed from crossmember **412**, operator **120** may manually control first utility arm **306***a* to rotate to the shoulder-up configuration to dispose insulator **404** into receptacle **324** as shown in FIG. **3**. In some embodiments, operator **120** may select an icon displayed by VR interface **502** corresponding to an automated mode and initiate automation coding to control first utility arm **306***a*, and any other components of aerial robot system **300**. In some embodiments, the automated mode may be based on the location of the receptacle and the type of aerial component (e.g., insulator **404**). The automated mode may process a series of commands controlling first utility arm **306***a* to dispose insulator **404** into receptacle **324** as shown.

In some embodiments, receptacle **324** may be disposed behind robot unit **302** and configured to receive waste including wire ties, nuts, bolts, insulators, and the like. Receptacle **324** may comprise a box as shown, which may be any shape including square, rectangular, circular, ellipti-

cal, cubic, spherical, ovoidal, and the like. Furthermore, in some embodiments, an insert may be placed inside receptacle **324**. The insert may be configured to protect the interior of receptacle **324** and the aerial component (e.g., insulator **404**) placed into receptacle **324**.

Virtual Reality Interface

Turning now to FIGS. **5**A-**5**B and **6**A-**6**B, in some embodiments, VR display **500** displays VR interface **502** comprising images referenced herein as video feed **504** displaying images/video from camera **212** (e.g., robot camera **426**). VR display **500** may be display **288** and may be or comprise head-up display **124** or any other monitor, tablet display, mobile device display, television display, or any other display as described in embodiments above. For example, VR interface **502** may be presented to operator **120** by VR display **500** (FIGS. **5**A-**5**B and FIGS. **6**A-**6**B) configured on head-up display **124**. As described above, operator **120** may interact with control system **280** comprising input devices **122** and head-up display **124** to control remote assembly **202** comprising aerial robot system **300**. Furthermore, operator **120** may interact with input devices **122** to control a curser, scroll icons, highlight icons, and select icons displayed by VR interface **502** as described in detail below.

FIG. **5**A depicts an embodiment of VR display **500** providing VR interface **502** illustrating an exemplary video feed **504** from robot camera **426**. Here, work environment **400** is displayed with icons **522** displayed over video feed **504**. Video feed **504** may be received from robot camera **426**; however, this is exemplary, and any images may be shown from any of cameras **212** described above. Furthermore, VR interface **502** may display video or images from any cameras **212** as well as any data from any sensors and analytics indicative of work environment **400** and the state of robot system **300**. The displayed graphics may be customizable and selectable by operator **120** to display submenus including analytic data. As described herein, any data associated with aerial device **100** and work environment **400** may be displayed. In some embodiments, network data may also be displayed. Data may be obtained from local user devices connected via short-range communication or by a local or wide area networks. For example, video feed **504** may be received from a foreman on the ground utilizing a camera to take pictures and video providing operator **120** an additional viewing perspective. Foreman operator **906** is described in more detail below.

As described above, FIG. **5**A depicts VR display **500** showing video feed **504** from robot camera **426**. Furthermore, for illustrative purposes, input devices **122** comprising left hand control **514** and right hand control **516** are shown. In some embodiments, input devices **122** comprise control inputs **512** such as, for example, left pad **518**, right pad **520**, as well as various buttons, and triggers. Control inputs **512** may be manipulated by operator **120** to control the operations of aerial device **100** as described above, and may be used to control VR interface **502**. Operator **120** may select a VR interface selection mode where operator **120** may engage control inputs **512** to select icons **522** on VR display **500** presented by VR interface **502**. In VR interface mode, a curser (not shown) may be displayed allowing operator **120** to move around VR interface **502** and select various icons using a thumb pad or any other control inputs **512** of input devices **122**. In some embodiments, operator **120** may scroll through menu items and select various icons, as well. For example, main menu **540** is shown. Main menu **540** comprises various main menu items that are selectable by operator **120**. In some embodiments, operator **120** may move curser over main menu **540** and select a main menu item. In some embodiments, operator **120** may select an input of control inputs **512** to select a menu item. Selection of control inputs **512** may cause display of main menu **540** and/or highlight a first item of main menu (e.g., meta scripts icon **544**). Operator may then scroll through main menu items using control inputs **512** of input devices **122**.

In some embodiments, operation of aerial device **100** may be halted, or locked while images and icons are displayed by VR interface **502**. VR interface **502** may display certain menus and operations over video feed **504**. As such, the view of operator **120** may be obstructed by the various items displayed. Therefore, in some cases, it may be necessary to lock operation of all or some components of aerial device **100** while items are displayed. Locking operations may be customizable by operator **120** and may also be overridden by operator **120** and/or foreman operator **906** as described in detail below.

In FIGS. **5**A-**5**B and **6**A-**6**B an exemplary scenario of changing insulator **404** is depicted in video feed **504**. Here, the video feed **504** is from robot camera **426** and captures auxiliary arm **304** and left utility arm **306***b* as well as insulator **404**, phase **408**, and bonding unit **424**. The video feed **504** shows the current work task and is shown for illustrative purposes only. The displayed task of changing insulator **404** is generically referenced below as "Task 2;" however, Task 2 may reference any tasks described herein, and any operations may be displayed by video feed **504**.

In some embodiments, operator **120** may interact with VR interface **502** to select the various items provided by various menus. In some embodiments, the various menus may comprise at least three distinct menus providing intuitive functions. In some embodiments, the various menus may comprise main menu **540**, quick menu **506**, and flyout menu **534** (FIG. **5**B). The three menus described herein are exemplary, and menus may comprise various other menus and/or submenus. Furthermore, the various features described in relation to each menu may be accessible by other menus and other features provided by VR interface **502** as described in detail below.

In some embodiments, VR interface **502** may display main menu **540**. Main menu **540** is selectable by operator **120** utilizing input devices **122** and input devices **122** may be used to navigate main menu **540** and other menus described herein. Furthermore, quick menu **506** may be displayed illustrating inputs and input functions by VR interface **502**. Here, right hand controls **510** depict up, down, left, and X icons. Operator **120** may move right pad **520** up and down to highlight each main item on main menu **540**. Furthermore, operator **120** may press down on right pad **520** to select an item and/or to display a submenu associated with the item. Furthermore, left hand controls **508** display various selectable icons that may be displayed according to customizable options by operator **120** described in more detail below and in reference to FIG. **5**B. Quick menu **506** is described in detail below and in reference to FIG. **5**B.

As illustrated in FIG. **5**A the first main menu item is meta scripts icon **544**. In some embodiments, meta scripts icon **544** provides a submenu of selectable meta script items. Each main menu item (e.g., icons **522**) may display a submenu icon. For example, meta scripts icon **544** may provide a meta script submenu providing options for running various meta scripts. When an option is selected, a meta script (e.g., meta scripts **618**, **620**, FIGS. **6**A and **6**B) may display steps to complete a work task. Meta scripts may be associated with computer-executable programing that may run for operator **120** to perform work tasks such as, for

example, replacing insulators (suspension and tension), cutting a jumper and tying back to a conductor, splicing a jumper back together, and the like. These tasks are exemplary, and it should be understood that any steps for completing tasks may be displayed by selection of items on main menu **540** by selecting meta scripts icon **544**. Here, operator **120** may select various icons representing meta scripts for display while completing the tasks. The meta scripts and operator coaching assistant is described in more detail below and may be displayed by meta scripts **618**, **620** in FIGS. **6**A and **6**B and coach screen **616**.

The second main menu item shown is control target icon **546**. Here, an exemplary control target submenu (e.g., submenu **542**) is displayed when control target icon **546** is selected. In some embodiments, a number, or "S" for submenu, or the like may be displayed on a main menu icon indicating that submenu **542** will be displayed when selected. As shown here, control target icon **546** comprises a border indication. The border indication may comprise a colored border, a thickness border that is thicker than other borders, a textured border, or the like. As such, it may be clear to operator **120** that selection of any menu icon described herein that comprises border indication may display a submenu **542**.

Here, control target submenu comprises various control target submenu icons. Each control target submenu icon may be selectable resulting in switching of hand control functionality to control various parts of aerial device. For example, selection of utility arm icon **548** provides control of utility arms **306***a*, **306***b* to input devices **122**. Selection of utility control Cartesian icon **550** provides control of auxiliary arms **304**, **366**, and utility arms **306***a*, **306***b* to input devices **122** utilizing Cartesian coordinate control. Selection of boom Cartesian control icon **552** provides boom assembly **104** control to input devices **122** utilizing Cartesian coordinate control. Selection of utility joint icon **554** provides control of each selectable joint of utility icon. Selection of boom assembly joint icon **556** provides control of each selectable joint of boom assembly **104** to input devices **122**. The icons and controls described here are exemplary and it should be understood that control of any operable parts of aerial device **100** may be provided by selection of icons **522** displayed by VR interface **502**.

The exemplary third main menu icon displayed provides selectable control of cameras **212** including robot camera **426**. Here, operator **120** may select robot camera icon **558** and remote assembly **202** provides control of robot camera **426** to operator **120**. Operator **120** may then move robot camera **426** by providing input to input pads **518**, **520**, of input devices **122**. As such, operator **120** may move input pads **518**, **520** and/or input devices **122** to move robot camera **426** in any 6 degree of freedom direction in a standard Cartesian coordinate system including standard orthogonal directions x, y, z, and p, q, r, rotations about the x, y, z axes.

In some embodiments, selection of robot camera icon **558** may provide display of robot camera icon submenu providing selectable options for stored automated actions and restricted movements of robot camera **426**. For example, selection of menu items controlling robot camera **426** may include moving robot camera **426** a programed distance (e.g., 10 centimeters) in any direction, rotating robot camera **426** a programed amount (e.g., 5 degrees), flipping robot camera **426** to view above or below a wrist joint of the utility arms **306***a*, **306***b*, and the like. Any movement of robot camera **426** may be programed and stored to assist operator **120** in quick changes for displaying video feed **504** by VR interface **502**.

In some embodiments, robot camera icon menu/submenu may provide additional selectable icons for controlling other functions of camera **212** (e.g., robot camera **426**. Camera **212** functions that may be controlled by selecting icons include disconnecting and connecting camera **212** and displaying and pausing video feed **504**, restricting and allowing motion (e.g., stop rotate and stop translation), stop and resume meta scripts for camera movements, and sending camera **212** to a designated home position. Any camera operations may be controlled via selection of icons provided on VR interface **502**.

In some embodiments, general automations icon **560** may be provided by VR interface **502** and may be selected to provide a general automations submenu comprising selectable icons that provide automation of components of remote assembly **202**. In some embodiments, VR interface **502** may provide selections to control various functions of the aerial robot system **300** such as, for example, automating utility arms **306***a*, **306***b* and auxiliary arm **304** to an arms straight out position. Automating utility arms **306***a*, **306***b* to a straight-out position may unwind joints that have reached operational limits. Utility arms **306***a*, **306***b* and auxiliary arm **304** may be selected to move to a designated home position. In some embodiments, the selected robot arms may be moved to their associated home position based on selection of an arm home icon option. Furthermore, all robot arms (e.g., utility arms **306***a*, **306***b* and auxiliary arm **304**) may be automatically moved to a working position and a roading position. The working position may be the home position ready for work or a designated position for the particular task to be performed. For example, individual icons may be provided to move left robot arms up, down, left, and right. Various distances may be programed as well. For example, utility arms **306***a*, **306***b* and auxiliary arm **304** may be programed to move 1, 2, 4, 6, 12, or any number of inches, which also may be selectable by operator.

In an exemplary scenario, operator **120** may select an automated task presented by an icon on VR interface **502**. The automated task may be to couple a tool from tool rack **334** to right utility arm **306***a*. The automated task may initialize all robot arms to a starting position such that auxiliary arm **304** and left utility arm **306***b* are out of the way of expected movement of right utility arm **306***a*. In some embodiments, the positions may be calculated based on home positions, known distances between components in work environment **400**, or based on virtual fences described below. In some embodiments, operator **120** may also select a home-for-all icon that moves all arms to home positions and select a tool change position icon that moves right utility arm **306***a* to the tool change position. In some embodiments, selection of a tool change icon may perform all tasks described above.

In another exemplary scenario, operator **120** may select a road position icon. The roading position may be a storage position for aerial robot system **300**. Aerial robot system **300** and component thereof may move to positions ready for boom assembly **104** to be lowered and stored for travel.

In some embodiments, motion settings icon **562** may be presented on main menu **540**. Selection of motion settings icon **562** may provide various submenu selections for controlling the motion of utility arms **306***a*, **306***b* and auxiliary arm **304** as well as any other components of aerial device **100**. It some scenarios, it may be advantageous to restrict the movement of parts of aerial device **100**. For example, linear

and rotational motion may be restricted, prevented, or allowed based on any motion settings submenu icon selection. For example, motion settings icon submenu may provide a tare override icon selection option. The tare override option, when selected, may zero the tool rotation preventing the tool from rotating when the robot is enabled and commanded to move. Any robot and tool movement restrictions and allowances may be activated by the motion settings.

In some embodiments, task selection is provided by task selection icon **564** and task selection submenu. The task selection options provide various stored tasks to be selected for populating flyout menu **534** with associated flyout menu icons **584**. The associated flyout menu icons **584** may provide task-associated tools and selectable automations for performing automated tasks. Exemplary automated tasks may be, as described above, replacing a suspension insulator, a pin, or a tension insulator, or connecting or disconnecting a jumper, changing tools for each task, as well as many more options associated with maintenance and replacement of power and telecommunication line components. Selection of any one of the menu/submenu items associated with task selection icon **564** may automatically update flyout menu **534** with all selections to retrieve the needed tools and the needed automations to complete the associated tasks. Flyout menu **534** comprising flyout menu icons **584** is described in detail below.

In some embodiments, when remote assembly **202** is activated, a null task is presented representing no task under the current task menu **524**. As such, there are no current tasks in operation or queued for operation. In some embodiments, the most recent performed or queued task is uploaded such that the most recently updated flyout menu **534** is displayed. In some embodiments, a next task in queue is automatically uploaded. Furthermore, a previous option may be provided by task selection icon **564** menu and/or submenu such that the most recent task is again uploaded, and the associated flyout menu **534** items are provided for selection. Further still, in some embodiments, a practice option may be provided by task selection icon such that operator **120** may select and run through a practice simulation for each task prior to performing the tasks live.

In some embodiments, automation interrupts icon **566** may be provided on main menu **540**. When automation interrupts icon **566** is selected an automation interrupts submenu may be presented for selection by operator **120**. Operator **120** may select various icons instructing and controlling various components of aerial device **100**. Automation interrupts may provide selectable icons by automation interrupts submenu for controlling the running of operational script controlling the various components of aerial device **100**. For example, automation interrupts may control the start, stop, pause, and resume of automation script. This allows operator **120** to stop and restart any automation of aerial device **100**. The automation of aerial device **100** is described in detail below.

Furthermore, in some embodiments, automation interrupts menu icons may be provided based on the state of aerial device **100** and components thereof. In an exemplary scenario, an automation, such as the tool exchange described above, may be the current task and in current operation. As such, continuing with the example provided above, right utility arm **306***a* may be reaching for a tool exchange at tool rack **334**. A start automation icon or resume automation icon may not be available or may not be displayed as the task is already underway. In some embodiments, a function that is not available may be displayed as a different color indicating that it is not available or may not be presented by VR interface **502**. Furthermore, an available function may be associated with a displayed or differently colored displayed icon. For example, stop automation or pause automation may be selectable by associated stop automation icon and pause automation icons represented as illuminated, a red or green color, or may be bordered or highlighted. Any indication including any color may indicate that an associated icon function is available or not available and the indication may be customizable by operator **120**.

In some embodiments, virtual fences are provided to prevent contact between components of aerial device (e.g., utility arms **306***a*, **306***b*, auxiliary arms **304**, **366**, bonding unit **424**, etc.). Generally, virtual fences may act as artificial barriers that components cannot cross and, in some embodiments, may provide haptic feedback by input devices **122** and display alerts by VR interface **502**.

In some embodiments, virtual fences may be automatically generated near or around specific components; however, virtual fences may also be placed by operator **120** utilizing pointer as shown in pointer **534***b* in FIG. **5**B. Here, selection of virtual fence icon **568** may provide a submenu with selectable icon features for showing/hiding virtual fences displayed by VR interface **502**. Furthermore, icon options may be available to add/subtract virtual fences as well as energize, ground, and clear all stored virtual fences. These options are exemplary, and any management of virtual fences may be performed by various icons presented in a submenu upon selection of virtual fence icon **568**.

In some embodiments, settings may be accessed by operator **120** selecting settings icon on main menu **540**. Main menu **540** may provide settings icon **570** that, when selected, may provide a settings submenu comprising various icons for selection by operator **120**. In some embodiments, various settings for aerial device **100**, VR interface **502**, input devices **122**, and the like may be accessed and controlled. In some embodiments, aerial robot system **300** component relative to work environment **400**, or the environment of virtual reality may be calibrated. A selection of a visuals icon may provide a sub or sub-sub menu providing selections for calibration and control of settings of various components and visuals of aerial device **100** including VR interface **502**. For example, in some embodiments, camera settings of camera **212** may be accessed and controlled. The camera settings may designate which cameras are used and which cameras are added to quick menu **506** described below. In some embodiments, connect/disconnect of camera **212** (e.g., robot camera **426**) may be selected. Each camera and/or all cameras may be moved, selected, connected, and disconnected, based on overcoming various locking features described below. Furthermore, each camera of cameras **212** may be individually accessed for fine tuning camera features. Camera features may include brightness, converge, and zoom. In some embodiments, carious automated converge features may be implemented. Here, it should be noted that operator **120** may set any convergence and zoom instructions, and any values described herein are exemplary only. For example, a converge value of 0.7 may be selected. Here, robot cameras **426** may move such that a focal point of each camera's field of view may be 0.7 meters from the robot head. In other words, a line extending outward along a focal path of each camera may converge at a point 0.7 meters from the lens/shutter of each lens of robot camera **426**. Similarly, selection of converge 1.0 may move the focal point to 1.0 meters, then selection of converge 2.0 may move the focal point to 2.0 meters, and so forth. Any focal length limited only by the cameras used may be imagined. Convergence of the cameras allows the cameras to focus on

objects at various distances from the cameras reducing the strain on operator **120** to see objects in the field of view.

Furthermore, in some embodiments, camera zoom may be controlled by operator selecting various icons displayed by the settings menu/submenu or settings-camera sub-submenu accessible by selection of settings icon **570**. In some embodiments, zoom icons may be displayed and may be selectable by operator **120**. Automated zoom settings may be stored and associated with each zoom icon. For example, zoom settings of +1×, +1.5×, +2×, and the like may be stored and applied when operator **120** would like to see objects closer. Similarly, or alternatively, the zoom may be set to 0.95 for objects that appear closer than they are, 0.75 to increase the field of view, 0.50, and the like. The zoom settings described herein are exemplary and customizable by operator **120** and accessible by selection of settings menu icon **570**.

In some embodiments, orientation of the camera video may be modified by operator selecting a camera render icon also presented upon selection of settings menu icon **570**. The camera render icon may provide a camera render sub menu with selectable options for operator **120** to modify camera video/image render settings. For example, an enable render flip setting may render the video feed **504** in an upright position. The upright feed may be used when robot camera **426** is above a wrist of utility arms **306***a*, **306***b*. Alternatively, a disable render flip setting may render video feed **504** in an upside-down, or an orientation inverted from the real video taken by robot camera **426**. The inverted video feed orientation can be useful when robot camera **426** is below the wrist of utility arms **306***a*, **306***b*.

In some embodiments, an enable stereo option provided by selection of settings menu icon **570** enables stereo vision of a plurality of cameras of cameras **212**. Any field of view of any cameras can be used to project 3D vision in the virtual reality environment (i.e., by VR interface **502**). In some scenarios, the stereo vision may be default. A return to default settings selection may be used to return to stereo if the camera settings are stuck in mono-vision. Similarly, or alternatively, enable mono left/right may turn off stereo vision and project left-camera-only/right-camera-only features by VR interface **502**. All camera settings for cameras **212** may be selectable in a camera submenu to main menu accessible by selection of settings menu icon **570**.

In some embodiments, main menu **540** may provide an advanced settings icon **572** option. Selection of advanced settings icon **572** may provide a submenu of selectable icons that, when selected, control operation of some components and interlocks of aerial device **100**. For example, selectable advanced settings icons provided by submenus and sub-submenus may include the functions of enabling and disabling of freedrive. Freedrive, in some embodiments, is an automated action where aerial robot system **300** can move rotationally and positionally to achieve an unloaded state. In some scenarios, safeguards electrically disconnect aerial robot system **300**, utility arms **306***a*, **306***b*, auxiliary arm **304**, tools associated with each arm, and other various components. The electrically disconnected components may be electrically reconnected by selecting various connection icons presented in the advanced settings menu/submenu accessible by selection of advanced setting icon **572**.

In some embodiments, load safeguards and estimated load expectations may be adjusted in advanced settings submenu presenting submenu icons and accessible by selection of advanced settings icon **572**. For example, operator **120** may input an expected load; however, as aerial robot system **300** lifts the load, safeguards based on expected load and robot orientation may prevent aerial robot system **300** from lifting the load. Knowing that the load is well within the limits of normal operation of aerial robot system **300**, operator **120** may access advanced settings menu and adjust load settings by adding weight to the expected load and/or resetting the expected load value. Upon update of the expected load value, aerial robot system **300** may then be controlled to lift the load, or an automation may be initiated by operator **120** to lift the load.

In some embodiments, advanced settings menu may provide selectable icons initiating automated movements of aerial robot system **300** and components thereof. Furthermore, operation modes of aerial device **100** may be activated. In some embodiments, operator **120** may activate front or rear facing mode of aerial robot system **300** by selection of advanced settings icons. Here, aerial robot system **300** may automatically rotate 180 degrees to face forward (working direction shown in FIGS. **3** and **4**) or backward toward tool rack **334**. Furthermore, advanced settings menu may provide selections to change the priority of wrist inverse kinematics depending on the tool used. In some embodiments, selection of a tool, as described in detail below, may automatically result in the operation priority change.

In some embodiments, VR interface **502** may display errors associated with aerial device **100** including computing systems and any detected mechanical problems. As described above, in some scenarios, a load may be detected as too high or a geometry of aerial robot system **300** may be near operational limits based on the load. Furthermore, as described in more detail below, electrical leakage may be continuously monitored and indicated by VR interface **502**. After detection and notification, any errors may be resolved by operator **120**. Once these errors are resolved, an advanced settings option may be selected to clear all errors displayed via VR interface **502**. Furthermore, any interlock systems that were initiated based on the errors may be manually or automatically released.

In some embodiments, various poses of aerial robot system **300**, auxiliary arm **304**, and any other components of aerial device **100** may be exported to and displayed by VR interface **502**. Any data associated with boom assembly **104**, aerial robot system **300**, and auxiliary arm **304** orientation and loading as well as tools used, tools stored, and the like may be displayable by VR interface **502** upon operator selection of various icons **522**. Furthermore, any of the components and orientations may be calibrated utilizing selectable inputs of the advanced settings menu accessible by selection of advanced settings icon **572**. For example, tool changer calibration may be controlled by automated actions initiated by selection of a tool icon associated with the advanced settings submenu. Tool slot location calibration may be performed based on views of camera **212** and detection of components by object recognition or by object indicia recognition. Furthermore, short-range communication tags disposed on the tools, as well as any other sensor data may be used to locate tools stored on tools rack **334** and recognize locations (e.g., tool holders **336**) on tool rack **334** again by object recognition or indicia recognition indicating each slot of tool rack **334** and/or the tool in a tool holder. Upon selection of an associated icon by operator **120**, aerial robot system **300** may enable an automation and follow a preprogrammed or user-commanded tool location and calibration process. Furthermore, the calibration may be tested by a similar icon selection process. Additional automated processes may be initiated to test the calibrated locations of tools to verify that the calibration is correct.

Furthermore, in some scenarios, remote assembly **202** may freeze, lose memory, lose network communication, or the like. Furthermore, operation of any components of aerial device **100** may be manually or automatically halted for unknown reasons. In this case, cameras **212** may be initialized as a tool.

In some embodiments, any information displayed by VR interface **502** and input into remote assembly **202** may be applied in various languages. The languages available may be displayed by a submenu to main menu **540** accessible by languages menu icon **574** and may be selectable to change all displays and audio in the language selected.

Any of the above-described main menu icons and associated submenu icon options may be added to quick menu **506** described in detail below. The main menu icons may be displayed in any order and may be customizable by operator **120** and/or any administrator of control system **280**. Furthermore, the various icons **522** displayed are only a small selection of examples. The menus and submenus described are generally extendable to any displayed icons **522**. As such, there is no limit to the number of menus and submenus displayed by VR interface **502** with each menu and submenu providing icons selectable by operator **120** to initiate automated functions of aerial device **100** described herein. Furthermore, the displayed icons may be any graphical representation of the associated functions, and each menu and submenu may be customizable by operator **120**.

Turning now to FIG. **5**B, VR interface **502** comprising video feed **504** and overlaid interface graphics (e.g., flyout menu **534**) is displayed. In some embodiments, flyout menu **534**, also known as tools menu and/or automations menu, provides task-specific functionality by selection of flyout menu icons **584**. Flyout menu **534** may be provided on VR interface **502** in any location customizable by operator **120**. For example, operator **120** may move flyout menu **534**, or any other menu, in real time by simply grabbing and moving to a different location using VR interface curser or simply grab and pull. Furthermore, flyout menu **534** may be accessible by simply selecting inputs **512** on input devices **122**. For example, a button input of inputs **512** may be pressed to select flyout menu **534**. Once pressed, a first option of flyout menu **534** (e.g., Pin Puller Pusher Side **534***a*) may be highlighted, colored, or displayed as a different size. Operator **120** may then use thumb controls or various other inputs to scroll through the various options available by flyout menu **534**.

Flyout menu **534** may depict various tools available to aerial robot system **300** and auxiliary arm **304** as well as various automations that may be performed by aerial robot system **300**, auxiliary arm **304**, and any other components of aerial device **100**. As described above, operator **120** may access flyout menu **534** and select any of flyout menu icons **584** displayed and representing various tools and automations. Flyout menu **534** displayed by VR interface **502** provides these various functions to operator **120** in a quick, easy to use, and user-understandable display.

In some embodiments, flyout menu **534** provides access to various tools. For example, as shown in FIG. **5**B, flyout menu icons **584** comprise pin puller pusher side **534***a*, pointer **534***b*, robotiq85 **534***c*, pneumatic gripper big **534***d*, pneumatic gripper flat **534***e*, and pin pusher puller front **534***f*. Flyout menu icons **534***a*-**534***f* comprise various tool selection icons that, when selected, initiate automation to select the tool associated with the selected icon from the associated tool holder **336** of tool rack **334**.

The tool icons **534***a*-**534***f* shown here are exemplary and any icon for any tool that may be stored in tool rack **334** and accessible by aerial robot system **300** may be provided by VR interface **502**. Selection of each tool icon of tool icons **534***a*-**534***f* may provide automation for acquiring each tool from tool rack **334** by aerial robot system **300**, and each tool may provide a specific function. For example, a pin pusher puller side tool may be configured to pull and push pins that are on the left or right of hardware in the work environment **400**. A pointer tool may be an electrically insulated tool for selecting points for the virtual fences described above. Robotiq85 may be configured as a general utility gripper that may be useful in gripping non-specific items. Pneumatic gripper big may be configured to grip under pneumatic power for grabbing broken suspension insulators. Pneumatic gripper flat may be configured to provide a higher gripping force than pneumatic gripper big and may be utilized for general gripping of non-specific items. Pin pusher puller front may be configured to pull and push pins that are disposed on the front or back of hardware or otherwise 90 degrees or orthogonal to the pins available to pin pusher puller side. In some embodiments, a u-hook tool may be used as a dielectric hooking tool to lift tension insulators when tension is removed from lines. It should be noted that the various tools described herein are exemplary and common-use tools that may be readily available in the industry; however, various other tools that may be configured for use by aerial robot system **300** and auxiliary arm **304** and may be stored in tool rack **334** may be used. Furthermore, all tools described herein may be associated with tools icons **534***a*-**534***f* and when tools icons **534***a*-**534***f* are selected, automation may be initiated to control aerial robot system **300** to retrieve the tools from, and place the tools on, tool rack **334** in their respective calibrated locations.

Furthermore, as shown in FIG. **5**B, flyout menu **534** may comprise various selectable function icons **534***g*-**534***k* configured to initiate available task-specific automations that may be implemented by the tools listed above and provided by tools icons **534***a*-**534***f*. As shown, the function icons **534***g*-**534***k*, when selected initiate automations comprising replacing a suspended insulator, grasping the suspended insulator, grasping a phase extension, object disposal, grasping a suspension insulator helper, and any other automated tasks/subtasks that may be necessary to complete the associated work task. Selection of an icon of function icons **534***g*-**534***k* may initiate the respective operations. For example, selection of replace suspension insulator icon **534***g* initiates automation comprising executing computer-implemented instructions to place an old insulator into receptacle **324** and retrieve a new insulator from parts holder **338** of tool rack **334**. Selection of grasp suspension insulator icon **534***h* may comprise automation to retrieve the new replacement insulator from parts holder **338**. Grasp phase extension **534***i* may automate retrieving phase extension rod **536** when dropping phase **408**. Object disposal icon **534***j* may dispose of an object in receptacle **324** that is currently held by aerial robot system **300** or auxiliary arm **304**. Grasp suspension insulator helper icon **534***k* may automate grasping a wedge used to retain large conductor hardware.

Furthermore, as described above in relation to main menu **540**, flyout menu **534** may comprise a flyout submenu **586** that is displayed when a flyout menu icon is selected. Here, replace suspension insulator icon **534***g* is shown as slightly larger than the other flyout menu icons **584**. The larger size is indicative of selection of replace suspension insulator icon **534***g* and display of flyout submenu **586**. Furthermore, flyout submenu icon (e.g., utility arm icon **590**) is larger

indicating selection. As described above, indication of selection and highlighting may include additional colors, borders, sizes, shapes, and the like.

In some embodiments, quick menu **506** may be displayed by VR interface **502** as shown in FIG. **5**B. Quick menu **506** may display various selectable control features associated with inputs **512** on input devices **122**. In some embodiments, the various selectable control features may be displayed on VR display **500** as shown. Each control feature may represent a different selectable automation or general control configured for scrolling through menu options on various menus (e.g., main menu **540** and flyout menu **534**). Here, four exemplary virtual controls are displayed; however, in practice, only one or two will be displayed each visually representing left hand controls **508** and right hand controls **510**.

In some embodiments, quick menu **506** comprises left hand controls **508** and right hand controls **510** indicative of various selections available to operator **120** in this exemplary scenario. Right hand controls **508** are operated similarly to left hand controls **510** and quick menu **506** is updated with inputs from operator **120** similarly as described in relation to left hand controls **508** described herein. Here, left control icons **576***a*, **576***b* presents left central indicia **580** indicative of left pad **518** and positions thereof. As operator **120** revolves their thumb around left pad **518** or selects various locations of left pad **518**, each icon of left control icons **576***a*, **576***b* associated with each selected location may be highlighted. Highlighting each icon of left control icons **576***a*, **576***b*, indicates to operator which icon is highlighted for selection. Operator **120** may then select the highlighted icon by again selecting the associated position of left pad **518** or by pressing any other input on left hand control **514**. Upon selection of any of left control icons **576***a*, **576***b*, the associated automation of aerial device is initiated.

Display of quick menu **506** provides immediate visual feedback to operator **120** such that operator **120** may see actions and movement of aerial device **100** on video feed **504** in real time along with operator selections and options on quick menu **506** simultaneously. Quick menu **506** may be configured with any icons associated with any automations of aerial device **100** including aerial robot system **300**, auxiliary arm **304**, alternate auxiliary arm **366**, and any other component of aerial device **100**. Quick menu **506** may be displayed while operator **120** is operating equipment and/or while operator **120** is in VR interface **502** selection mode selecting controls and modes of aerial device **100**.

In some embodiments, quick menu icons **582** may display various selections. The quick menu icons **582** may comprise, in some embodiments, automation interrupt icons such as stop script, stop all scripts, pause script, and play script (e.g., right control icons **578***b*). As described above the automation interrupt icons allow operator **120** to immediately control currently running automations. Furthermore, common quick menu functions are shown by the icons displayed in left control icons **578***b* in FIG. **5**B comprising, starting from the top in clockwise order, tare override, next, enable admittance, and toggle instructions. In some embodiments, the quick menu icons **582** shown here may be automatically uploaded to quick menu **506**. Tare override may provide the automated function of zeroing the rotation of any tool in any utility arm **306***a*, **306***b*, and auxiliary arm **304** locking movement. Preventing movement of the tool allows the arm (e.g., utility arms **306***a*, **306***b*, and auxiliary arms **304**, **366**) to rotate for working alignment rather than rotating the tool. Selection of the next icon moves the automation to the next task while using meta scripts. Meta scripts are described in more detail below. Selection of the enable admittance icon turns on admittance control. Admittance control places control in the hands of operator **120** by minimizing automated protective stops. Here, admittance control allows the arms to bump into objects without attempting to go through the objects by implementing limited protective stops. Protective stops prevent arms **306***a*, **306***b*, and auxiliary arms **304**, **366**, as well as any other movable components from pushing into the objects. Selection of toggle instruction icon toggles meta script instructions on and off.

In some embodiments, selection of a task, which is described in detail below, may automatically populate various menus. In some embodiments, quick menu **506** may automatically be populated based on the selected task from a task menu. For example, as shown in FIG. **4**, meta script may display the task of "raise/lower auxiliary arm." Auxiliary arm **304** is lifting phase **408** such that the phase **408** can be moved up or down and out of the way of robot unit **302**. Because the sequence of sub tasks for the current tasks are stored and known, a quick menu button for switching to auxiliary arm **304** operation may be provided. Furthermore, a single selection to move auxiliary arm up or down may be provided to quick menu **506** based on the task that is currently performed.

The quick menu **506** may be updated in real time after each task. In some embodiments, quick menu **506** may provide four selections relating to the first four sub tasks. For example, quick menu **506** may provide selections for automating grasping of a tool, placing the tool in position, grasping an insulator, and automated removal of the insulator. When all sub tasks are complete, quick menu **506** may then be updated with the next four tasks—for example, initiation of automatic placing the insulator **404** in the receptacle, initiation of automation of changing tools, initiation of retrieving a new insulator, and initiation of moving the new insulator in position for placement. Any of the above-described tasks operable by automations and selection of associated icons may be performed by automation or by operator **120**. In some embodiments, operator **120** may be notified by VR interface **502** that a task does not include automation or that the automation cannot be performed because of irregularities in the work environment **400** and that operator **120** must perform the tasks manually.

In some embodiments, VR interface **502** may display various notifications and information indicative of the state of robot system **300**. As described above, admittance control places control in the hands of operator **120** by minimizing automated protective stops. Here, admittance indicator **526** is displayed as being temporarily disabled as robot system **300** is in a state where protective stops are desired over admittance control. For example, right utility arm **306***a* may be controlled to cross left utility arm **306***b* by operator **120**, but a protective stop may automatically stop movement if utility arms **306***a*, **306***b*, contact. Admittance indicator **526** notifies operator that admittance control is on/off and, in some embodiments, some controls may be limited based on the state of admittance control.

Furthermore, notification screen **592** may display any errors associated with operator inputs, malfunctions of robot system **300**, and the like. Here, notification screen **592** is indicating that operation of right arm (right utility arm **306***a*) is paused because an interlock foot pedal is not pressed. As such, operator **120** must press the interlock foot pedal to allow operation of right utility arm **306***a*. Here, notification screen **592** provides instructions to operator **120**. As such, notification screen **592** may also be, or be associated with, coach screen **616** described below.

Operator Coach

Generally, embodiments of the disclosure relate to providing steps, instructions, and user-initiated or step-initiated automation to assist in the work-related tasks in work environment **400** as described above. In some embodiments, VR interface **502** causes display of menus comprising selectable features for controlling operation of remote assembly **202** as described above. VR interface **502** may provide a step-by-step procedure list for completion of the tasks. In some embodiments, each step in the procedure list may comprise instructions for performing the associated step. These steps and instructions may be provided by meta scripts **618**, **620** and coach screen **616** presented by VR interface **502**.

FIGS. **6**A-**6**B depict an exemplary embodiment of VR interface **502** providing various menus and icons for providing an operator assistant or "operator coaching assistant" for operator **120**. FIG. **6**A depicts an embodiment of VR interface **502**, illustrating an exemplary operator coaching assistant function of remote assembly **202**. In some embodiments, operator coaching assistant comprises computer-executable instructions provided by the combination of control system **280** and computer **260** providing VR interface **502** and control functions (e.g., automations) and operation instructions to operator **120** and remote assembly **202**. Operator coaching assistant, in some embodiments, assists operator **120** in performing tasks using VR interface **502** by providing various menus and indications by VR interface **502**. In some embodiments, task menu **524** may be provided such that operator **120** is aware and can verify that the correct task is being performed. Furthermore, task menu **524** may present various state information indicative of the state of aerial device **100** and the components thereof such that operator **120** is aware of the current state of robot system **300**. Here, task menu **524** presents Task 2. Task 2 may represent a general task such as, for example, changing a faulty insulator as described above, or may be a specific task such as, for example, retrieving pin puller pusher side described above. A task number may be displayed (e.g., Task "2"), or a title of the task may be displayed (e.g., "retrieving pin puller pusher side"). Furthermore, task menu **524** may also represent the state of aerial robot system **300**, and a state of cameras **212** of robot unit **302**. For example, task menu **524** may be display with a color or bordered in a color that represents the state of the current task. For example, task menu **524** may be green when cameras **212** and aerial robot system **300** are active, yellow when paused, and red when inactive. The color arrangement here may also apply to any icon and indicium described herein. In some embodiments, the green, yellow, and red color system may be generalized to represent in operation, paused, and stopped for any icon associated with any tool, component of robot system **300**, and any function.

In some embodiments, task menu **524** may display various icons representing the state of aerial device **100** associated with the current task. In some embodiments, a VR controller battery power level indicator (not shown) or an estimated time until VR controller loses power may be displayed. The battery power and time indicator may represent the time left for operator **120** to operate aerial device **100**. Furthermore, various other icons such as, for example, camera/robot state indicator, boom leakage current indicator **602**, E-stop state indicator **604**, foot pedal state indicator **606**, bond state indicator **608**, task indicator **610**, as well as any other indicator representative of the state of aerial device **100** may be displayed. Boom leakage current indicator **602** may display the amount of current detected across the dielectric gap separating the work environment **400** from the base of aerial device **100**. Here, an exemplary 2 microamps is displayed. E-stop state indicator **604** displays the current state of e-stops (e.g., electric interlocks). Various indicators may represent the state of the e-stops. For example, if an e-stop is engaged e-stop state indicator **604** may be red and enlarged. Alternatively, if no e-stop is engaged, e-stop indicator **604** may be green, black, or no indicator may be displayed. Any indication representing the state of e-stops may be imagined.

In some embodiments, task menu **524** may comprise foot pedal state indicator **606** may display a state of the foot pedal **700** (FIG. **7**). For example, foot pedal state indicator **606** may be displayed with a red or yellow indicator, or border, when not pressed and a green indicator when pressed. Foot pedal **700** pressed or not pressed may be configured to change modes of aerial device **100** as described in detail below in reference to FIG. **7**.

Furthermore, task menu **524** may include bond state indicator **608**, which may represent the state of bonding between aerial device **100** and electrical lines (e.g. phase **408**). Here, bond state indicator **608** and/or color of bond state indicator **608** may represent a state of bonded (e.g., green) or not bonded (e.g., red) indicative of aerial device **100** bonded to phase **408**. As such, operator **120** may always be aware of the bonded state of aerial robot system **300**.

In some embodiments, a current automation may be displayed by automation screen **612**. Automation screen **612** may convey to operator **120** that automations are currently active and in operation and which automations are currently active and in operation. As shown in FIG. **6**A, the current automation is "grabbing tools." The tools here may have been selected by operator **120** or automatically selected based on the current task (e.g., Task 2) displayed on task indicator **610**. As an automation is currently in operation, all, or most, manual operations may be locked as aerial robot system **300** moves utility arms **306***a*, **306***b* to retrieve tools from tool rack **334**. Therefore, automation screen **612** indicates and illustrates the automation currently taking place as well as locking out operator **120** from performing tasks, in some scenarios. In some embodiments, operator **120** must wait until the automation is complete to take back control of aerial robot system **300**; however, in some embodiments, the automation may automatically pause and request action from operator **120** as described below. Furthermore, automation screen **612** may also display various icons indicating which components of aerial device are in operation and which tools are currently being retrieved from or placed on tool rack **334**.

Furthermore, when the automation is complete, automation screen **612** may change to indicate that the state of aerial device **100** is in condition for takeover by operator **120**. For example, automation screen **612** may turn green or may display various signs such as, "automation complete," "operator control," or the like. In some embodiments, automation screen **612** is simply no longer displayed on VR interface **502**, and operator **120** has been instructed that no display means that the automation is complete.

Furthermore, as shown in the exemplary embodiment depicted in FIG. **6**A the active components of aerial device **100** may also be displayed. Here, utility arm icon **590** is displayed indicating that one of utility arms **306***a*, **306***b* is currently performing automated operation (e.g., "grabbing tools"). Current meta script **618** is displayed reciting "Retrieve Tools" as the most recent request from operator **120**. In some embodiments, a single meta script may be displayed indicating the most recent operation, or the current

operation. In some embodiments, several meta scripts may be displayed, as described below.

Furthermore, in the exemplary scenario depicted in FIG. **6**A, alternate auxiliary arm icon **614** is also displayed to indicate the next component needed for the next action up in the sequence of events for the current task (e.g., "Task 2"). Also, next action meta script **620** is displayed providing operator **120** with the next action that will take place during the automation or any next actions that operator **120** must take to initiate the next action for Task 2. Here, VR interface **502** is causing display of coach screen **616** in the upper left-hand corner of VR display **500**, providing next action meta script **620**, and indicating the next tool that is required by displaying alternate auxiliary arm icon **614**. Here, three indications are displayed; however, any number of the indications may be displayed, which may be customizable by operator **120**. As such, meta scripts (e.g., current meta script **618** and next action meta script **620**) display the sequence of actions that are taken by both operator **120** and aerial device **100** to complete Task 2.

In some embodiments, after the current action (e.g., grabbing tools) is complete, the next action is displayed (e.g., select fence points). As operation of the next action is requested from operator **120**, all automation scripts may pause waiting for operator **120** to perform the next action. Here, coach screen **616** is requesting operator **120** to select a location for setting virtual fences using alternate auxiliary arm **366** and the pointer tool. Once operator **120** has selected virtual fences the automation may move on to the next action in the sequence of Task 2 automatically or by initiation by operator **120**.

FIG. **6**B depicts an embodiment of VR interface **502** providing video feed **504** from a forward-facing camera, which in some embodiments, may be robot camera **426**. Various VR interface features may also be displayed including flyout menu **534** depicting various tools for use with Task 2 including the current utility arm icon **590** as selected. Furthermore, current task menu **524**, left hand icon **576***a*, right hand icon **578***a*, and current automation screen **612** listing the current automation "swapping insulator." Therefore, utility arms **306***a*, **306***b* may currently be running an automation to place an old or broken insulator into waste receptacle **324** and retrieve a new insulator from parts holder **338**.

In some embodiments, secondary display **622** displays video from camera **212**, which, in this scenario, may be different than video feed **504**. As shown here, during the current task of swapping the insulator, the video displayed by secondary display is provided from a camera of cameras **212** associated with utility arms **306***a*, **306***b*, and/or tool rack **334**. As such, operator **120** can monitor the progress of the automation while still viewing work environment **400** by video feed **504**. Secondary display **622** may automatically be displayed or may be initiated by operator **120**. In some embodiments, initiation of secondary display **622** is customizable by operator **120** and may be added to quick menu **506** for to activate and deactivate by selection of an input by input devices **122**. Furthermore, as secondary display **622** shows the view of an automation, all or some controls may be locked such that operator **120** cannot move components of aerial device **100**, as described above. E-locks prevent operator **120** from moving components during an automated task and prevents distractions. During automated tasks some or all components of aerial device **100** may be locked to operator **120** such that the automated task may be stopped by operator **120** before operator **120** can take over any tasks. In some embodiments, operation of components may be limited or only some operation may be locked.

FIG. **7** depicts foot pedal **700** operable by operator **120** for selection of various modes of operation of aerial device **100**. In some embodiments, foot pedal **700** may present a quick and intuitive method of switching modes of aerial device **100**. For example, as shown, three modes may be selected indicated by the displayed icons-utility arm icon **548**, utility control Cartesian icon **550**, and boom Cartesian control icon **552**. The modes operable for selection here are exemplary and any operational modes of aerial device **100** may be selected by foot pedal **700**. In some embodiments, the operational modes selectable by foot pedal **700** are customizable such that operator **120** may choose from any operational modes, automations, tasks, and actions described herein.

In some embodiments, as operator **120** presses foot pedal **700**, each successive icon may be illuminated, change color, highlighted, bordered, or any other indicium representing selection of the icon. Operator **120** may then press foot pedal **700** selecting the operation mode indicated on the screen. In some embodiments, foot pedal **700** may be used in conjunction with an interlock pedal (not shown) or foot pedal **700** may act as an interlock as well, providing the E-locks described above. For example, when operator **120** lifts their foot off of foot pedal **700**, aerial device **100** may apply E-locks, and components of aerial device **100** may be inoperable. As such, in some embodiments, foot pedal **700** must be pressed to operate aerial device in all or some modes. In some embodiments, when used with the associated interlock pedal, foot pedal may simply be used to select operational modes of aerial device **100**. In some embodiments, the operational mode of aerial device **100** is automatically set in Cartesian mode; however, changing to joint mode (controlling each joint individually) may be selected in main menu **540** and may be selected by scrolling through various icons **522** by pressing foot pedal input **702** until utility control Cartesian icon **550** is highlighted. Operator **120** may then select utility control Cartesian icon **550** by pressing foot pedal input **702** again.

In some embodiments, foot pedal **700** may be a plurality of foot pedals and/or foot pedal **700** may comprise a plurality of inputs (e.g., foot pedal input **702** may comprise a plurality of foot pedal inputs). For example, foot pedal input **702** may comprise a first foot pedal input that when selected scrolls through optional icons while selection of a second foot pedal input selects the highlighted icon. In some embodiments, foot pedal **700** comprises sensors and a processor configured to detect force and time of the foot pedal input **702** being depressed. For example, operator **120** may tap foot pedal input **702** to scroll through various icons **522** and press and hold foot pedal input **702** to select the various icons **522**. As such, foot pedal **700** may provide various functionality in association with controlling modes of aerial device **100** and selection of options by VR interface **502**. Furthermore, the various functions provided by foot pedal **700** described herein may also be performed by inputs associated with operator **120**, foreman operator **906**, and any other crew members. The functions performed by foot pedal **700** may also be performed by selection of any buttons, switches, seat switches, and the like as well as features on VR interface **502**.

In some embodiments, foot pedal **700** may comprise an interlock feature as described above. In some scenarios, the interlock feature must be engaged for automations to proceed and/or for operator **120** to perform manual tasks. As described above, automations may be initiated by operator

120. During the course of an automation, aerial robot system 300, for example, may be active indicating a green indicium on quick menu 506. Operator 120 may release foot pedal 700, thus engaging the interlock and pausing/stopping operations. As such, the green-colored indicator of quick menu 506 may turn to yellow indicating a paused operation or red indicating a stopped operation. Operator 120 may then press foot pedal 700 resuming the automation and the indicium again changes to green to shown that the operation has commenced. Furthermore, operator 120 may end automation and take control of the aerial robot system 300 at any point during automation.

Simulated Joysticks

In some embodiments, as described above, as input devices 122 move, aerial robot system 300 moves according to the positional movement of input devices 122. However, in some embodiments, motion of auxiliary arm 304, alternate auxiliary arm 366, and boom assembly 104, may be controlled utilizing velocity control rather than position. Furthermore, in some embodiments, first, second, third, and fourth order linear and nonlinear controllers may be utilized to provide smooth motion and jerk control. In some embodiments, a mode of input devices 122 can be changed to represent proportional velocity joystick controls. Here proportional velocity joystick controls provide three directions (e.g., x, y, z orthogonal directions in Euclidean space) at once with the base of the input devices 122 resting on the user's knees as shown in FIG. 8A.

FIG. 8A depicts operator 120 sitting with input devices 122 resting on the knees of operator 120 providing a pivot point at the contact point between user's legs and the input devices 122. This operational mode allows operator 120 to operate input devices 122 as though the input devices 122 are connected to aerial device 100 as in typical models. As such, operator 120 may be more comfortable operating input devices 122 in the operational mode shown in FIG. 8A and described below. Furthermore, as depicted, input devices comprise left pad 518, right pad 520, and various left buttons 802 and various right buttons 806 as well as left trigger 804 and right trigger (not shown).

Referring now to FIGS. 8B and 8C, in some embodiments, when the user presses left trigger 804, a snapshot of the orientation of input devices 122 can be taken as a calibrated zero operation. The calibrated zero operation provides a baseline where all movement of input devices 122 can be detected by various sensors and relayed to the various processor and controllers (e.g., processor 282, controllers 284, processors 262) for controlling aerial device 100. Movement if input devices 122 from the calibrated zero point indicates intended movement of the selected component of aerial device 100 as shown in FIG. 8B where arrows indicating joystick dynamics for operation in Cartesian control mode example 808 and joint control mode example 810. Here, the term "Jib" is representative of auxiliary arm 304 and any alternate auxiliary arm 366 described herein. The term "Truck" is representative of boom assembly 104 in Cartesian control mode and joints of boom assembly 104 in joint control mode.

FIG. 8C depicts an exemplary embodiment where input devices 122 are utilized in Cartesian control mode for Cartesian inputs by respective left hand control 514 and right hand control 516 shown in Cartesian control mode example 808. FIG. 8C shows the mapping of left hand control 514 and right hand control to perform different functions when input devices 122 receive roll, pitch, or yaw compared to the above-described zero calibration point. Yaw is not shown, but it is imagined that yaw could be incorporated to provide functions of aerial device 100. Multiple directions can be input simultaneously in order to move in a direction that combines several Cartesian directions and/or components thereof. For example, when operator 120 pushes right hand control 516 forward and to the right (as shown) while engaging right trigger (not shown) jib (e.g., auxiliary arm 304) or truck (e.g., boom assembly 104) forward and to the right.

In another example utilizing joint mode as shown in joint control mode example 810, operator 120 may move left hand control 514 to the left rotating turntable counterclockwise while pushing right hand control forward extending upper boom section 110. Any combination of movements may be performed utilizing input devices 122 in Cartesian mode and joint mode. Furthermore, the inputs described herein are exemplary and may be customizable by operator 120.

Foreman and Operator

FIG. 9A depicts an exemplary jobsite 900 with a VR vehicle 902. In some embodiments, operator 120 is inside VR vehicle 902 operating aerial device 100. VR vehicle 902 may be connected by cable 904 providing wire communication to aerial device 100 for operating aerial device 100. In some embodiments, cable 904 may be a dielectric fiber optic cable providing electrical protection to operator 120 in the event that robot unit 300 becomes energized. Furthermore, the use of fiber optics, in some embodiments, provides greater communication range than standard copper wire communications. Here, VR vehicle 902 is exemplary and representative of operator 120 operating aerial device 100 from a remote location. It should be noted that operator 120 may be positioned on aerial device 100, on the ground near aerial device 100, at a specifically designated VR site (e.g., VR vehicle 902), or in a remote office that could be miles away. Furthermore, communication between operator 120 and aerial device 100 may be provided by cable 904 or wireless communication such as short-range communication, local area network, and/or wide area network.

In some embodiments, before operator 120 can take control of aerial device 100, foreman operator 906 may perform a set up process with or without the assistance of operator 120. In some embodiments, foreman operator 906 may assess jobsite 900 and verify that the conditions are appropriate for work to commence. The jobsite preparation process is described in detail below in reference to FIG. 11. Here, foreman operator 906 may provide a different perspective than what can be seen utilizing cameras 212. As such, foreman operator 906 can see if conditions change outside of the field of view of cameras 212. At any point, foreman operator 906 may stop movement of aerial device 100 and take over control of aerial device 100 as described below. Foreman operator 906 may control aerial device 100 using control box 908.

FIG. 9B presents exemplary control box 908 utilized by foreman operator 906. Various operations of aerial device 100 may be controlled by inputs of control box 908. The inputs described here are exemplary and may be arranged in any configuration. In some embodiments, the configuration may be customizable by foreman operator 906.

In some embodiments, control box 908 comprises various device inputs 910 controlling various components on aerial device 100. Device inputs 910 may control various operations of aerial device 100 for controlling various components such as, for example, turntable 106, boom assembly 104, aerial robot system 300, auxiliary arm 304, alternate auxiliary arm 366, as well as various components such as a plurality of outriggers for stabilizing aerial device 100. In

some embodiments, control box inputs **912** may be operable to control various modes and operations of aerial device **100** as described below.

When Cartesian mode is selected, foreman operator **906** may control aerial device **100** by operating device inputs. When in Cartesian mode device inputs **910** correlate to Cartesian directions relative to the boom tip. For example, forward on device inputs **910** may move boom towards the aerial robot system **300**. In another example, when aerial device is in joint mode, each input paddle of device inputs **910** may correlate to each joint of boom assembly **104**. As such, in either Cartesian mode or joint mode, foreman operator **906** may control every aspect of boom assembly **104** for placement of aerial robot system **300** in work environment **400**. Furthermore, as described above auxiliary arm **304** may also be controlled in Cartesian mode or joint mode.

In some embodiments, control box inputs **912** may be operational to control various modes and operations of aerial device **100**. For example, a toggle switch providing by, in some embodiments, radio communication a signal to aerial device **100** may control carrier mode vs unit mode. Carrier mode may be implemented while boom assembly **104** is stowed and aerial device **100** is ready for transport. Unit mode may only be implemented when the outriggers are deployed and aerial device **100** is ready for work operations described above.

In some embodiments, as foreman operator **906** may take over control of aerial device **100** at any time, a toggle switch of control box inputs **912** may switch modes between VR control and radio control. In VR control mode, operator **120** may control aerial device **100** utilizing the VR components and interacting with VR interface **502** as described above. At any point, foreman operator **906** may switch the toggle changing modes to radio mode and take control of aerial device **100**. In radio mode, device inputs **910** may be used to control aerial robot system **300**, auxiliary arm **304**, alternate auxiliary arm **366**, and any other components of aerial device **100**.

Furthermore, foreman operator **906** can select E-stop button **914** and take over control of all operations as described above. At any point foreman operator **906** may select E-stop button **914** to immediately lock operations of aerial device **100**, aerial robot system **300**, auxiliary arm **304**, and other components of aerial device **100** either alone or in combination. For example, foreman operator **906** may have a more global perspective of work environment **400** than operator **120**. As such, foreman operator **906** may see potential difficulties and stop all operations be selecting E-stop button **914**.

PROCESS EXAMPLES

FIG. **10** depicts an exemplary joint operation process **1000** for operator **120** and foreman operator **906** to set up jobsite **900** and control aerial device **100**. In some embodiments, the process begins with foreman operator **906** conducting a jobsite review. At step **1002**, foreman operator **906** checks jobsite **900**. Checking jobsite **900** at least includes checking weather conditions, ground conditions, vegetation, and the surroundings of work environment **400** to verify conditions are appropriate for operation.

At step **1004**, foreman operator **906** confirms task requirements. Foreman operator **906** may review the planned tasks such as, of example, replacing an insulator on a power line. Foreman operator **906** may conduct a quick inspection of the power line to verify that task is correct and that there doesn't appear to be any other work than needs to be done (e.g., clearing vegetation or maintenance work that can be handled using aerial robot system **300**).

At step **1006**, foreman operator **906** may create/maintain the jobsite. Foreman operator **906** may select an appropriate location to set up aerial device **100** and establish barriers around the jobsite according to known specifications in the regions. Foreman operator **906** may also verify that the jobsite meets and is able to meet all known federal and state safety regulations before work begins.

At step **1008**, foreman operator **906** along with operator **120**, in some embodiments, perform pre-operations checks to verify that aerial device **100** is operational and in the appropriate location to complete the scheduled tasks. For example, based on any loads that may be carried by aerial robot system **300**, aerial device **100** must be in a location where the geometry of boom assembly **104** can carry the load within the allowable range. As such, foreman operator **906** and operator **120** must verify that the location and configuration of aerial device **100** through operation will fall within the guidelines of the task.

At step **1010**, foreman operator **906** and, in some embodiments, operator **120** may perform pre-operation checks on aerial device **100**. Pre-operational checks may include inspections of all electrical, hydraulic, mechanical, optical, pneumatic systems, and the like of aerial device **100** including aerial robot system **300**.

At step **1012**, mechanized setup of aerial device **100** may be performed by operator **120** and foreman operator **906**. This may include moving aerial device **100** in place and/or testing all components to verify that aerial device **100** including aerial robot system **300** are operational and prepared to handle the current task.

At step **1014**, the aerial device may be grounded in preparation for work on live power lines. In the case where aerial device **100** will operate on live lines carrying electrical energy, aerial device **100** can be grounded to ensure proper electrical grounding of aerial device **100**.

At step **1016**, foreman operator **906** and operator **120** may prepare aerial robot system **300** with the appropriate tools and hardware for the tasks to be performed. Using the example from above, the task may be to exchange a faulty insulator. As such, a new insulator, nuts, bolts, tie wire, and the like may be positioned on aerial robot system **300**. Furthermore, any tools may be positioned on tool rack **334** such as, for example, wrenches, tie wire tools, clamps, and the like for performing the task.

At step **1018**, communications may be established between aerial robot system **300** and jobsite personnel. Communication may be established between the components of block diagram **200**. For example, operator **120** utilizing head-up display **124** and input devices **122** may communicatively connect with aerial robot system **300** and foreman operator **906**. As such, VR interface **502** may be established such that operator **120** may select features on VR interface **502**, thereby initiating action by aerial robot system **300**.

At step **1020**, gross unit operation via radio remote may be established. Here, foreman operator **906** may control various functions of aerial device **100** and aerial robot system **300**. Various controls and E-stops may be tested to verify that foreman operator **906** can take over and control aerial device **100**.

At step **1022**, various automatic stops and limitations may be placed on aerial robot system **300** to ensure clearances from electrical potentials and collisions. The automatic stops

and limitations may be established by electrical detection of potentials and virtual fences as described above.

At step **1024**, operation of aerial robot system **300** commences. Operator **120** may control aerial robot system **300** while foreman operator **906**, at step **1026**, closely watches and verifies each operation to complete the task from a secondary vantage point. Here, foreman operator **906** confirms that all actions are being conducted in accordance with the current task while viewing the work environment **400**.

At step **1028** operator **120** may bond bonding unit **424** to phase **408** and test bonding utilizing sensors on boom assembly **104**. Furthermore, at step **1030**, foreman operator **906** confirms the state of boom tip bond-on by monitoring voltage leakage across the insulating section of the aerial device **100**. As work continues, foreman operator **906** and operator **120** continue to monitor current leakage across the boom assembly **104**. During all operations, at step **1032**, foreman operator **906** maintains a **360** view of jobsite **900** and watches for hazards and communicates with operator **120** as a second pair of eyes from a different vantage point. At any time, foreman operator may halt operations and take over control of aerial robot system **300**.

FIG. **11** depicts an exemplary process of causing display of VR interface **502**, selection of icons, and carrying out a task utilizing menus, coaching, and automations referenced herein by reference numeral **1100**. At step **1102**, VR interface **502** may be displayed by head-up display **124**. As described above, communication may be established between the components depicted in block diagram **200**. VR interface **502** may provide a base setup based on the most recently completed task or may start with an initiation sequence requesting information from operator **120**. In some embodiments, VR interface **502** may request a task and customizations by operator **120**. In some embodiments, communication with remote assembly **202** may be established before setup of VR interface **502** as described below.

At step **1104**, control system **280** comprising input devices **122** may receive input from operator **120** and transmit the commands to remote assembly **202** comprising aerial robot system **300** including auxiliary arms **304**, **366**. Operator **120** may manually control aerial robot system **300** to prepare for operation to complete the task. Here, operator **120** may check all controls and video feeds as well as conduct any simulated tasks to prepare for real completion of the tasks.

At step **1106**, a task may be uploaded to VR interface **502**. In some embodiments, operator **120** may navigate main menu **540** or task menu **524** and select a task. In some embodiments, a task may be an entire work task for operation such as, for example, replacing an insulator. In some embodiments, tasks may be individual operations such as, for example, dispose of an insulator. Selection of the task may be performed by operator **120** from any menu displayed on VR interface **502**. Upon selection of the task, scripts associated with the task may be uploaded from a database to a current operational storage to execute the functions associated with the task. The task scripts may update VR interface **502**, provide communication connections, provide E-stops, and allow operator **120** to control various components of aerial device **100** based on the selected task.

Upon selection and upload of the task, the process moves to step **1108**, where the task scripts may upload and cause display of coach screen **616**, meta scripts **618**, **620**, quick menu **506**, and flyout menu **534** by VR interface **502**. The instructions and selectable icons features displayed by VR interface **502** may be based on the selected task as described above. For example, coach screen **616** and meta scripts **618** may provide a list of actions and instructions for completing the task. Quick menu **506** may display options selectable icons that initiate operator that are necessary to complete the task. Furthermore, flyout menu **534** may provide automation options and tools selection icons that are necessary to complete the task. VR interface **502** may be automatically populated with all options for operator **120** to complete the selected task.

At step **1110**, VR interface may be customized based on input by operator **120**. Operator **120** may initiate a VR configuration mode by main menu **540** and alter the configuration of VR interface **502**. For example, operator **120** may select various icons associated with main menu **540** to add to quick menu **506** and flyout menu **534**. In an exemplary scenario a insulator may be damaged such that the standard tool used to remove insulators is no longer applicable. As such, operator **120** may add to flyout menu **534** a more generalized tool that may be used. As such, when the time comes to grip insulator, the more generalized vice grip may be available by flyout menu **534** such that operator **120** does not stop operation and search for the tool. Furthermore, in some embodiments, operator **120** may simply be more comfortable utilizing tools alternative to those typically used and may customize flyout menu **534** and quick menu **506** for selection of those tools.

When all operations have been tested and VR interface is prepared, the process may move to step **1112**. At step **1112**, VR interface **502** may receive input from operator **120** by input devices **122** to control operation of robot unit **302** to complete the task. Operator **120** may select inputs on input devices **122** and foot pedal **700** to change modes of aerial device **100**, operate aerial robot system **300**, and select automatons by VR interface **502**. Operator **120** may select VR interface mode and select icons displayed by VR interface to initiate automations of aerial robot system **300** such, for example, retrieve insulator, dispose of insulator, bond onto phase **408**, and the like. Furthermore, operator **120** may change modes to manual operation and take control of aerial robot system **300** to perform tasks manually using input devices **122**.

At step **1114**, inputs may be relayed to remote assembly **202** for manual operation and automated operations of aerial robot system **300** based on the above-referenced selections of operator **120**. Accordingly, as operator **120** provides input to input devices **122**, aerial robot system **300** carries out the actions as instructed.

At step **1116**, VR interface **502** may provide real-time feedback to operator **120** during task operations. Real-time feedback may comprise providing video feed **504** and secondary display **622** as well as providing notifications and haptic feedback to operator **120** and foreman operator **906**. Furthermore, any state indications may be continuously updated such as, for example, **602**, E-stop state indicator **604**, foot pedal state indicator **606**, bond state indicator **608**, task indicator **610**, provided by task menu **524**.

Furthermore, as actions and tasks are completed, coach screen **616**, meta scripts **618**, **620**, quick menu **506**, and flyout menu **534**, are updated in real time at step **1118** during task operations until the task is complete. As described above, meta scripts **618**, **620** may update to display the next action and coach screen **616** may display the next requested task for operator **120** as well as providing instructions how to perform the next task.

In some aspects, the techniques described herein relate to a system providing a virtual reality user interface for use with a remotely controlled robot to complete a work task. The system includes a robot configured to perform work in

a work environment, at least one camera associated with the robot and configured to provide a video feed, a display configured to display the video feed from the at least one camera, one or more input devices configured to receive inputs from an operator, at least one processor, and one or more non-transitory computer-readable media storing computer-executable instructions that, when executed by the at least one processor, perform a method of providing the virtual reality user interface. The method includes obtaining the video feed from the at least one camera, causing display of the video feed by the display, generating a menu including a plurality of icon features, causing display of the menu on the display and over the video feed, receiving, by the one or more input devices, a selection of an icon feature of the plurality of icon features of the menu, and initiating automated control of the robot based on the selection of the icon feature.

In some aspects, the techniques described herein relate to a system, wherein the robot is disposed on a boom of an aerial device and the operator is viewing the display at a remote location.

In some aspects, the techniques described herein relate to a system, further including: a foot pedal operable to control a mode of the aerial device, wherein the mode of the aerial device includes a Cartesian coordinate mode and a joint isolation mode.

In some aspects, the techniques described herein relate to a system, further including: at least one sensor providing data indicative of a state of the robot, obtaining the data indicative of the state of the robot from the at least one sensor, wherein the automated control of the robot is further based on the state of the robot; and displaying the data indicative of the state of the robot by the display.

In some aspects, the techniques described herein relate to a system, wherein the automated control of the robot includes operating at least one utility arm of the robot and operating at least one auxiliary arm disposed on an aerial platform proximate the robot.

In some aspects, the techniques described herein relate to a system, wherein the operator controls the robot from a remote location, and wherein the system further includes: a control box including a plurality of inputs operable by a foreman operator to take control of the robot from the operator.

In some aspects, the techniques described herein relate to a system, wherein the method further includes: causing display of meta scripts configured to notify the operator of current subtasks and future subtasks to complete the work task; and providing task icons selectable by the operator to initiate current automations of the current subtasks and future automations of the future subtasks.

In some aspects, the techniques described herein relate to a system, wherein the video feed is a first video feed and is from a first camera of the at least one camera, wherein the system includes a second camera, and wherein the method further includes causing display, by the display, of a second video feed from the second camera.

In some aspects, the techniques described herein relate to one or more non-transitory computer-readable media storing computer-executable instructions that, when executed by at least one processor, perform a method of providing a virtual reality user interface for controlling a robot to complete a work task. The method includes obtaining a video feed from a camera associated with the robot, causing display of the video feed by a display, generating a menu including a plurality of icon features, causing display of the menu on the display and over the video feed, receiving, by one or more input devices and by an operator, a selection of an icon feature of the plurality of icon features of the menu, and initiating automated control of the robot based on the selection of the icon feature.

In some aspects, the techniques described herein relate to a media, wherein the robot is disposed on a boom of an aerial device, wherein the automated control of the robot is disposing of a damaged component of a power line and retrieving a new component for replacement.

In some aspects, the techniques described herein relate to a media, wherein the method further includes: providing at least one submenu when a main menu icon feature is selected; and displaying the icon feature by a flyout menu for initiating the automated control upon selection.

In some aspects, the techniques described herein relate to a media, wherein the robot is disposed at a boom tip of an aerial device, wherein the method further includes receiving input from a foot pedal operable to control a mode of the aerial device, and wherein the mode of the aerial device includes a Cartesian coordinate mode and a joint isolation mode.

In some aspects, the techniques described herein relate to a media, wherein the method further includes electronically blocking the operator from moving components of the robot while the automated control of the robot is in operation.

In some aspects, the techniques described herein relate to a media, wherein the method further includes causing display of instructions for completing the work task and a list of subtasks to complete the work task.

In some aspects, the techniques described herein relate to a media, wherein the method further includes causing display of a coach screen including the instructions for completing a subtask of the list of subtasks, and wherein the instructions include a request for the operator to initiate the automated control of the robot to complete the subtask.

In some aspects, the techniques described herein relate to a method of providing a virtual reality user interface for controlling a robot to complete a work task. The method includes obtaining a video feed from a camera associated with the robot, causing display of the video feed by the display, generating a menu including a plurality of icon features, causing display of the menu on the display and over the video feed, receiving, by one or more input devices and by an operator, a selection of an icon feature of the plurality of icon features of the menu, and initiating automated control of the robot based on the selection of the icon feature.

In some aspects, the techniques described herein relate to a method, further including: providing at least one submenu when a main menu icon feature is selected; and displaying the icon feature by a flyout menu for initiating the automated control upon selection.

In some aspects, the techniques described herein relate to a method, wherein the automated control of the robot includes operating at least one utility arm of the robot and operating at least one auxiliary arm disposed on an aerial platform proximate the robot.

In some aspects, the techniques described herein relate to a method, causing display of meta scripts configured to notify the operator of current subtasks and future subtasks to complete the work task; and providing task icons selectable by the operator to initiate current automations of the current subtasks and future automations of the future subtasks.

In some aspects, the techniques described herein relate to a method, wherein the robot is disposed on a boom tip of a boom of an aerial device, wherein the operator is positioned at a remote location, and wherein a foreman operator is

positioned proximate the aerial device, and wherein the method further includes locking operation of the robot based on an input of a control box operated by the foreman operator.

Although the invention has been described with reference to the embodiments illustrated in the attached drawing figures, it is noted that equivalents may be employed, and substitutions made herein without departing from the scope of the invention.

Having thus described various embodiments of the disclosure, what is claimed as new and desired to be protected by Letters Patent includes the following:

1. A system providing a virtual reality user interface for use with a remotely controlled robot to complete a work task, the system comprising:

a robot configured to perform work in a work environment;

at least one camera associated with the robot and configured to provide a video feed;

a display configured to display the video feed from the at least one camera;

one or more input devices configured to receive inputs from an operator to control the robot in the work environment and manipulate features of the virtual reality user interface;

a pedal configured to control a mode of the robot;

at least one processor; and

one or more non-transitory computer-readable media storing computer-executable instructions that, when executed by the at least one processor, perform a method of providing the virtual reality user interface, the method comprising:

obtaining the video feed from the at least one camera;

causing display of the video feed by the display;

generating a menu comprising a plurality of icon features,

wherein at least one icon feature of the plurality of icon features is indicative of an operational mode of the robot;

causing display of the menu on the display and over the video feed;

initiating a first mode of the robot when the pedal is in a first pedal configuration and initiating a second mode when the pedal is in a second pedal configuration; and

displaying an indication of the first mode or the second mode by the display.

2. The system of claim **1**, wherein the robot is disposed on a boom of an aerial device and the operator is viewing the display at a remote location.

3. The system of claim **1**, further comprising:

at least one sensor providing data indicative of a state of the robot,

wherein the method further comprises:

obtaining the data indicative of the state of the robot from the at least one sensor;

autonomously controlling the robot based on the state of the robot; and

displaying the data indicative of the state of the robot by the display.

4. The system of claim **3**, wherein the autonomous control of the robot comprises operating at least one utility arm of the robot and operating at least one auxiliary arm disposed on an aerial platform proximate the robot.

5. The system of claim **1**,

wherein the operator controls the robot from a remote location, and wherein the system further comprises:

a control box comprising a plurality of inputs operable by a foreman operator to take control of the robot from the operator.

6. The system of claim **1**, wherein the method further comprises:

causing display of meta scripts configured to automatically initiate current automations;

notify the operator of current subtasks and future subtasks to complete the work task; and

providing task icons selectable by the operator to initiate the current automations of the current subtasks and future automations of the future subtasks.

7. The system of claim **1**,

wherein the video feed is a first video feed and is from a first camera of the at least one camera,

wherein the system comprises a second camera, and

wherein the method further comprises causing display, by the display, of a second video feed from the second camera.

8. The system of claim **1**, wherein the first mode is a cartesian coordinate mode and the second mode is a joint isolation mode.

9. One or more non-transitory computer-readable media storing computer-executable instructions that, when executed by at least one processor, perform a method of providing a virtual reality user interface for controlling a robot to complete a work task, the method comprising:

obtaining a video feed from a camera associated with the robot;

causing display of the video feed by a display;

generating a menu comprising a plurality of icon features,

wherein at least one icon feature of the plurality of icon features is indicative of an operational mode of the robot;

causing display of the menu on the display and over the video feed;

initiating a first mode of the robot when a pedal is in a first pedal configuration and initiating a second mode when the pedal is in a second pedal configuration; and

displaying an indication of the first mode or the second mode by the display by the at least one icon feature.

10. The media of claim **9**,

wherein the robot is disposed on a boom of an aerial device, and

wherein the method further comprises autonomously controlling the robot to dispose of a damaged component of a power line and retrieve a new component for replacement.

11. The media of claim **10**, wherein the method further comprises:

providing at least one submenu when a main menu icon feature is selected; and

displaying an action icon feature by a flyout menu for initiating the autonomous control upon selection.

12. The media of claim **11**, wherein the method further comprises electronically blocking manual inputs from moving components of the robot while the autonomous control of the robot is in operation.

13. The media of claim **9**, wherein the method further comprises causing display of instructions for completing the work task and a list of subtasks to complete the work task.

14. The media of claim **13**,

wherein the method further comprises causing display of a coach screen comprising the instructions for completing a subtask of the list of subtasks, and

wherein the instructions comprise a request for an operator to initiate automated control of the robot to complete the subtask.

15. The media of claim **9**, wherein the first mode is a cartesian coordinate mode and the second mode is a joint isolation mode.

16. A method of providing a virtual reality user interface for controlling a robot to complete a work task, the method comprising:

obtaining a video feed from a camera associated with the robot;

causing display of the video feed by the display;

generating a menu comprising a plurality of icon features, wherein the plurality of icon features includes an icon feature indicative of an operational mode of the robot;

causing display of the menu on the display and over the video feed; and

initiating a cartesian coordinate mode of the robot when a pedal is in a first pedal configuration and initiating a joint isolation mode when the pedal is in a second pedal configuration.

17. The method of claim **16**, further comprising:

providing at least one submenu when a main menu icon feature is selected; and

displaying the icon feature by a flyout menu.

18. The method of claim **16**, further comprising autonomously controlling the robot based on a state of the robot by operating at least one utility arm of the robot and operating at least one auxiliary arm disposed on an aerial platform proximate the robot.

19. The method of claim **16**,

causing display of meta scripts configured to notify an operator of current subtasks and future subtasks to complete the work task; and

providing task icons selectable by the operator to initiate current automations of the current subtasks and future automations of the future subtasks.

20. The method of claim **16**,

wherein the robot is disposed on a boom tip of a boom of an aerial device and is operational to receive wireless communication from a remote operator.

* * * * *