US 20250279622A1

(19) United States
(12) Patent Application Publication
OHGA
(10) Pub. No.: US 2025/0279622 A1
(43) Pub. Date: Sep. 4, 2025

(54) **LASER CHAMBER, GAS LASER DEVICE, AND ELECTRONIC DEVICE MANUFACTURING METHOD**

(71) Applicant: **Gigaphoton Inc.**, Tochigi (JP)

(72) Inventor: **Hitoshi OHGA**, Oyama-shi (JP)

(73) Assignee: **Gigaphoton Inc.**, Tochigi (JP)

(21) Appl. No.: **19/046,184**

(22) Filed: **Feb. 5, 2025**

(30) **Foreign Application Priority Data**

Mar. 4, 2024 (JP) 2024-032140

Publication Classification

(51) **Int. Cl.**

H01S 3/036	(2006.01)
G03F 7/20	(2006.01)
H01S 3/038	(2006.01)

(52) **U.S. Cl.**

CPC ***H01S 3/036*** (2013.01); ***G03F 7/2006*** (2013.01); ***H01S 3/0381*** (2013.01); ***H01S 3/0382*** (2013.01)

(57) **ABSTRACT**

A laser chamber of a gas laser device outputting laser light including a container filled with a laser gas; a first electrode extending in a first direction and arranged in the container; a second electrode arranged at a position closer to an inner wall of the container than the first electrode while extending in the first direction and facing the first electrode in a second direction orthogonal to the first direction; a fan causing the laser gas to flow through a discharge space between the first and second electrodes; an insulating guide arranged on a downstream side of the second electrode; and a vortex dividing member including structures extending in the first direction and arranged discretely along a direction in which the laser gas flows on a downstream side of the insulating guide, and dividing a vortex generated by a part of a flow of the laser gas.

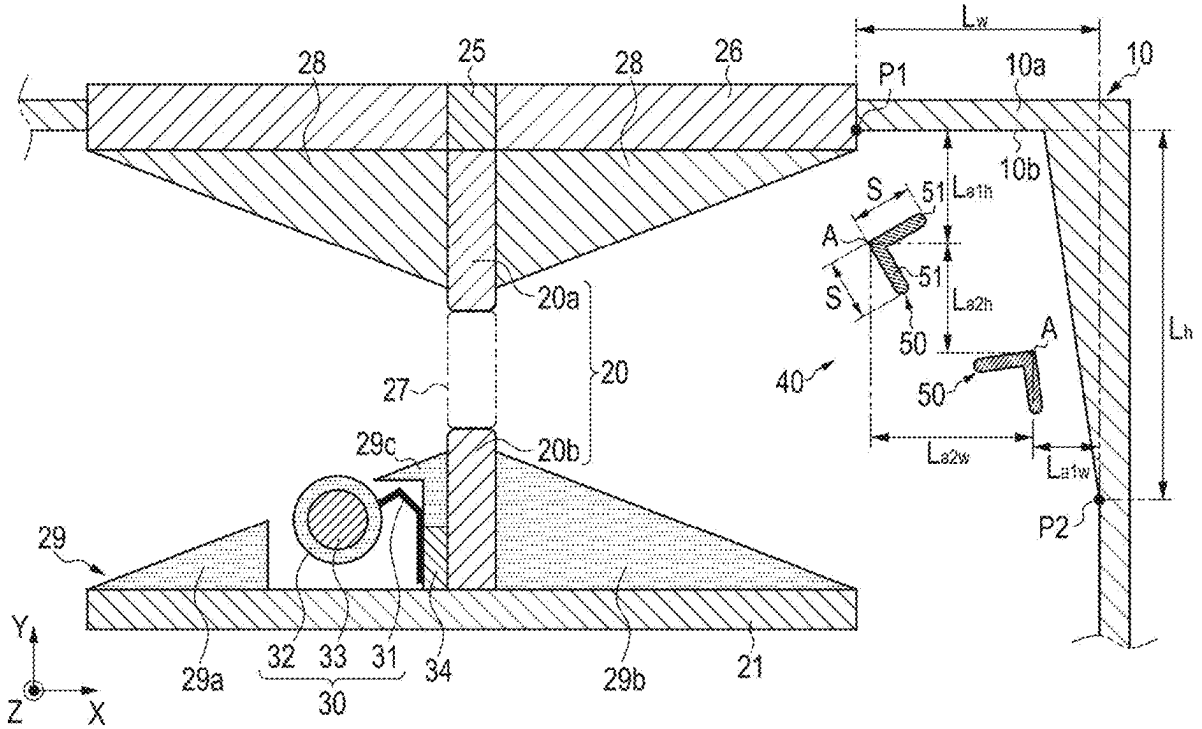

FIG. 1

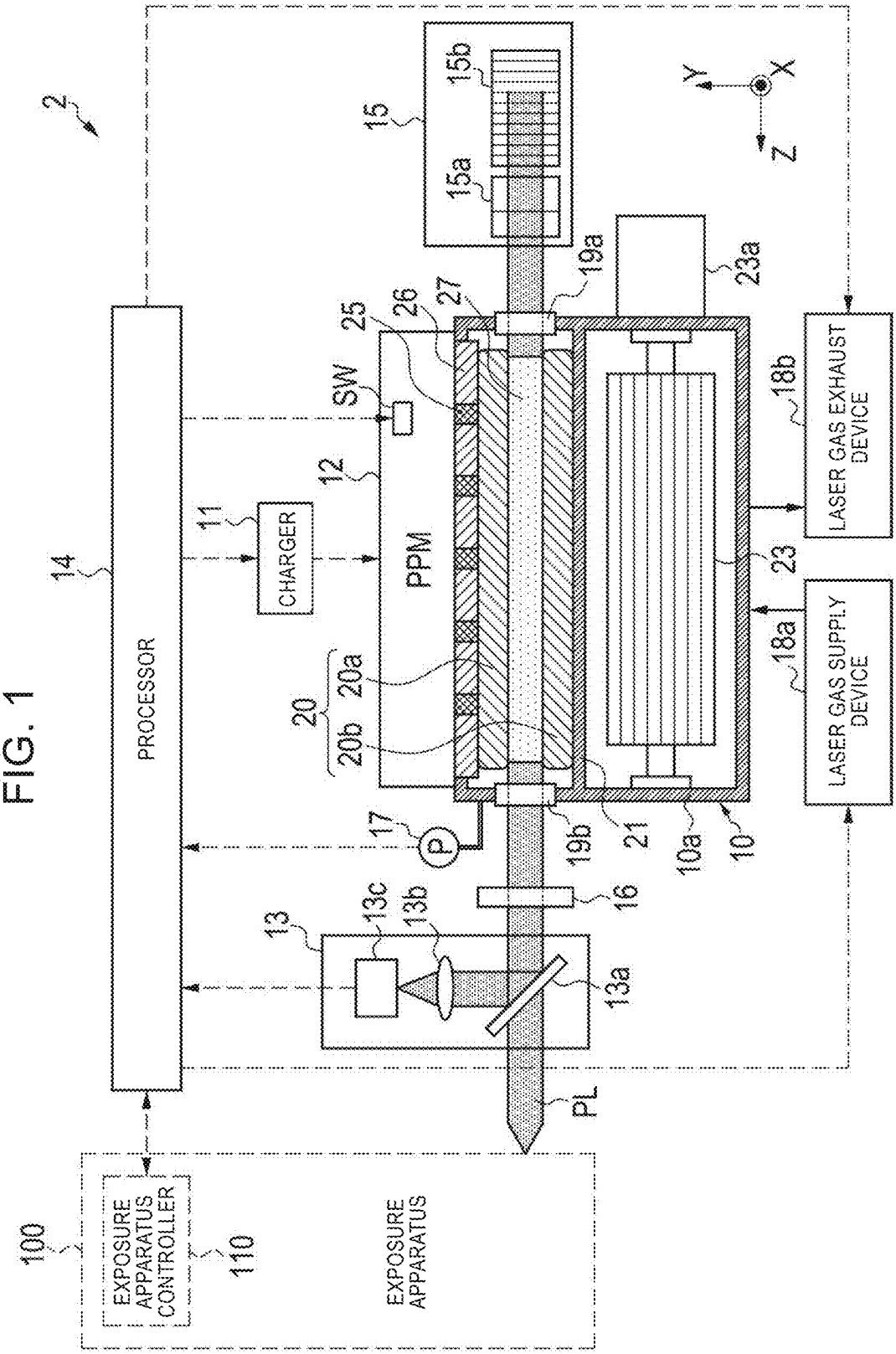
2
14
PROCESSOR
11
CHARGER
12
PPM
SW
25
26
27
15
15a
15b
19a
23a
Y
X
Z
18b
LASER GAS EXHAUST DEVICE
23
18a
LASER GAS SUPPLY DEVICE
20
20a
20b
17
P
19b
21
10a
10
16
13
13c
13b
13a
PL
100
EXPOSURE APPARATUS CONTROLLER
110
EXPOSURE APPARATUS

FIG. 2

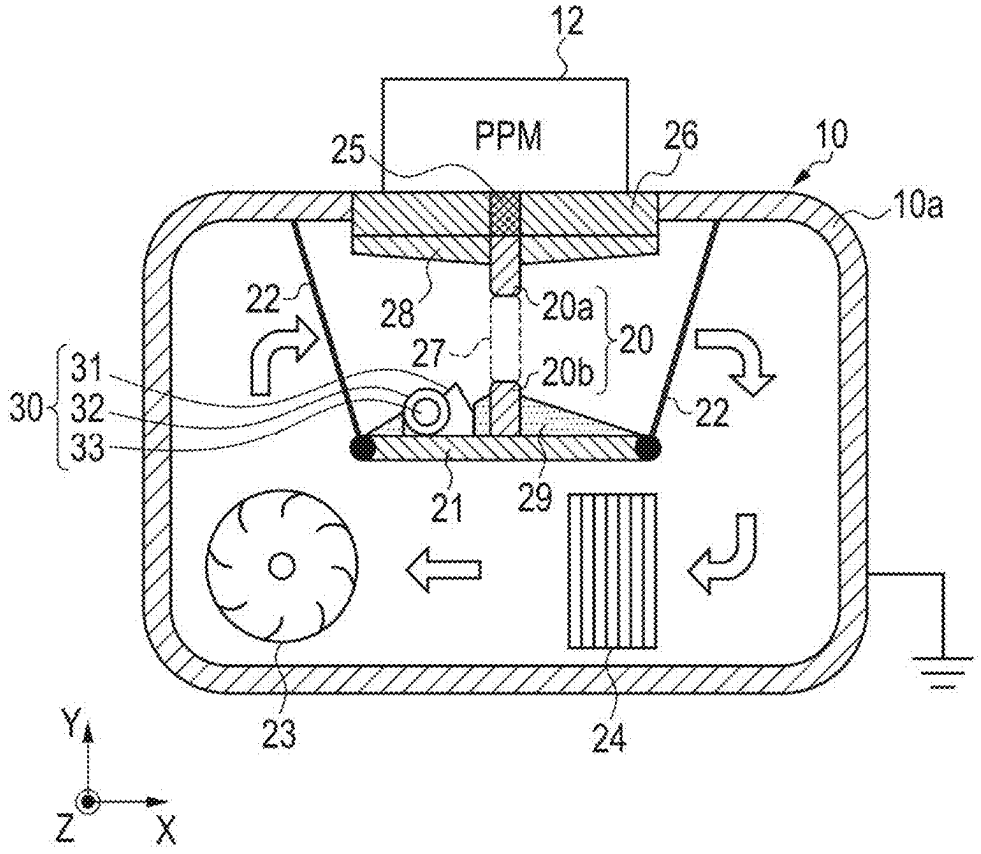

FIG. 3

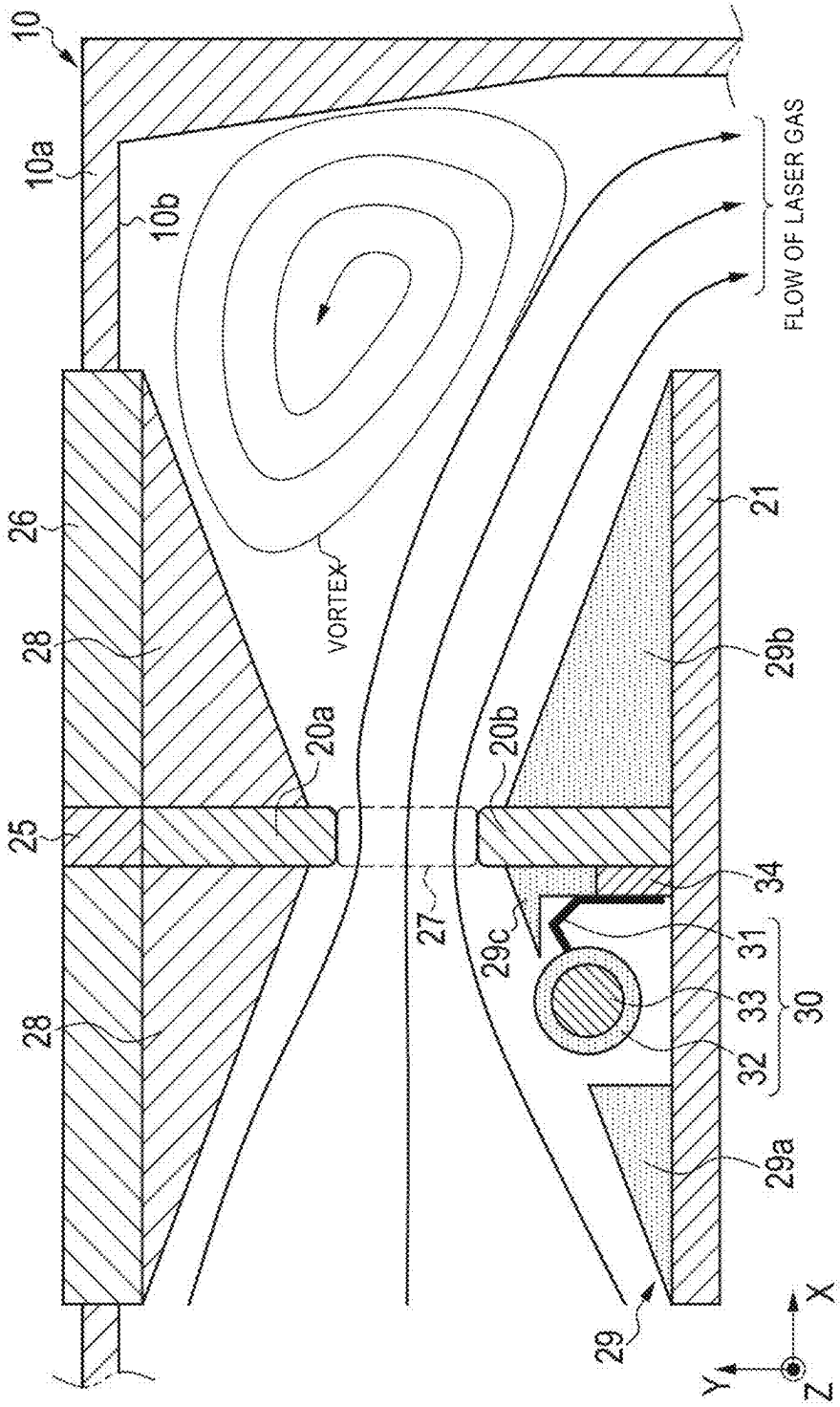
10
10a
10b
FLOW OF LASER GAS
26
28
28
25
VORTEX
20a
20b
27
29c
21
29b
34
31
33
32
30
29a
29
X
Y
Z

FIG. 4

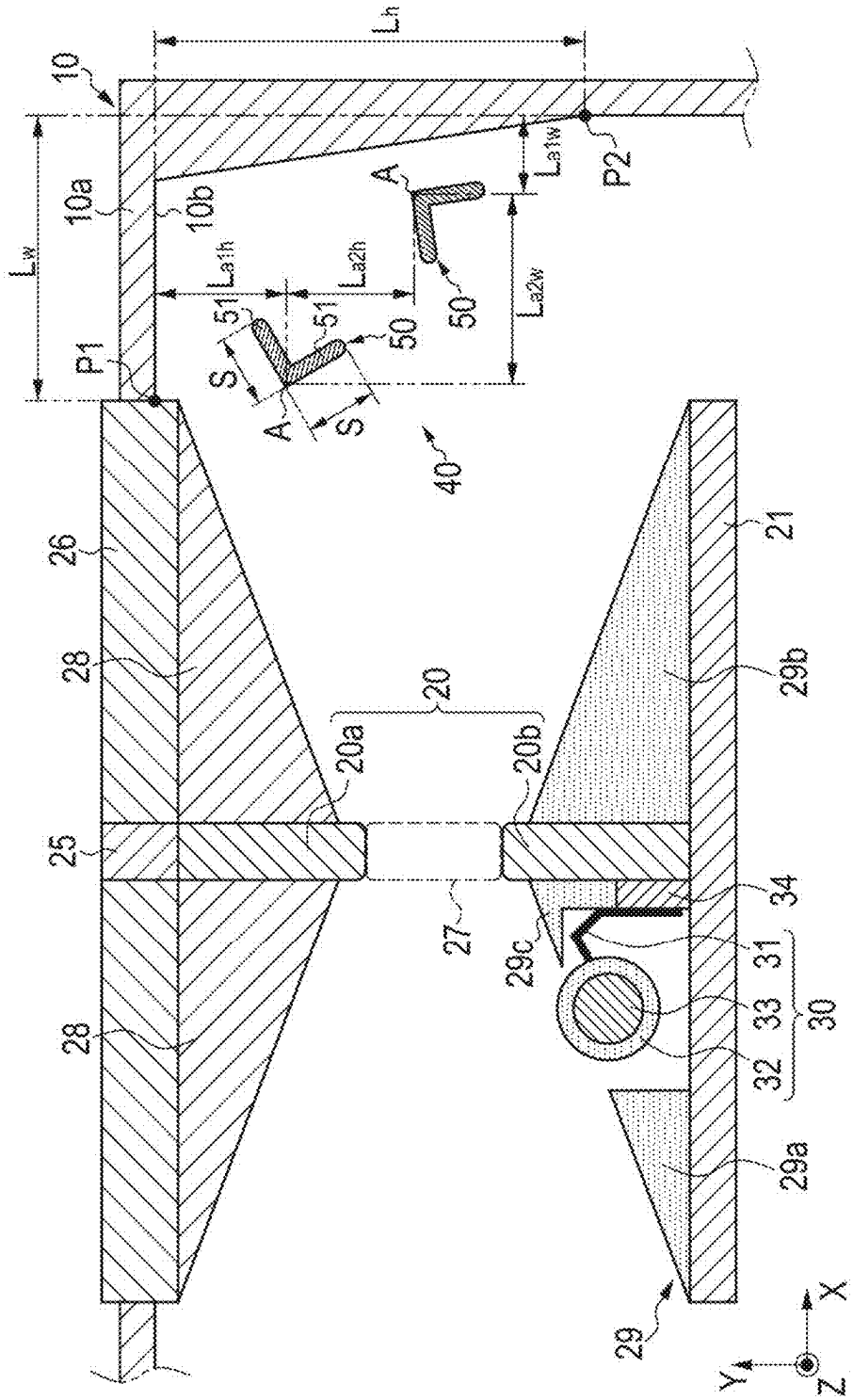
10
10a
10b
Lh
Lw
P1
P2
La1h
La2h
La1w
La2w
A
A
50
50
51
51
S
S
40
26
28
28
25
20
20a
20b
27
29c
21
29b
34
31
33
32
30
29a
29
X
Y
Z

FIG. 5

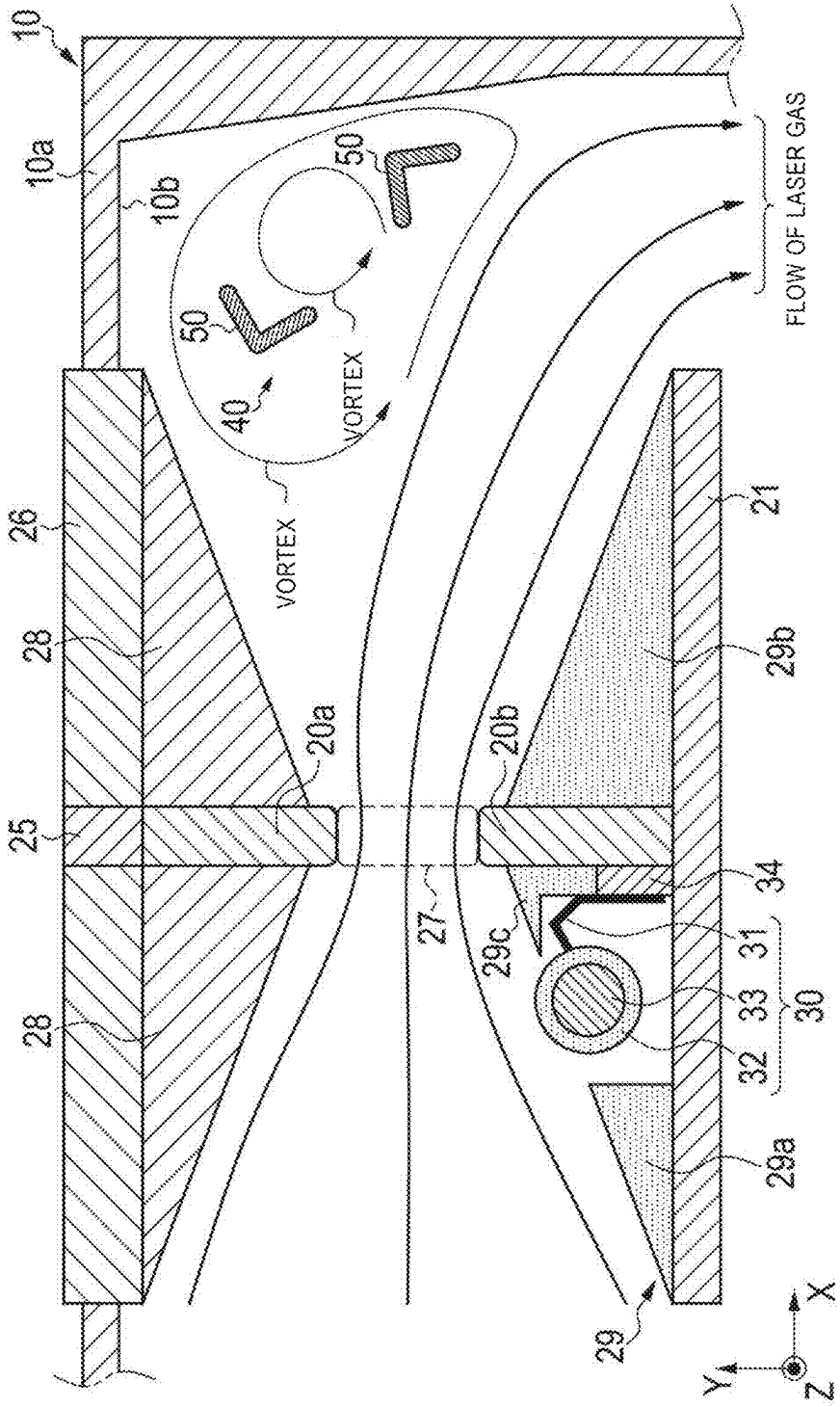
10
10a
10b
50
50
40
VORTEX
VORTEX
FLOW OF LASER GAS
26
28
28
25
20a
20b
27
29c
34
31
33
32
30
21
29b
29a
29
X
Y
Z

FIG. 6

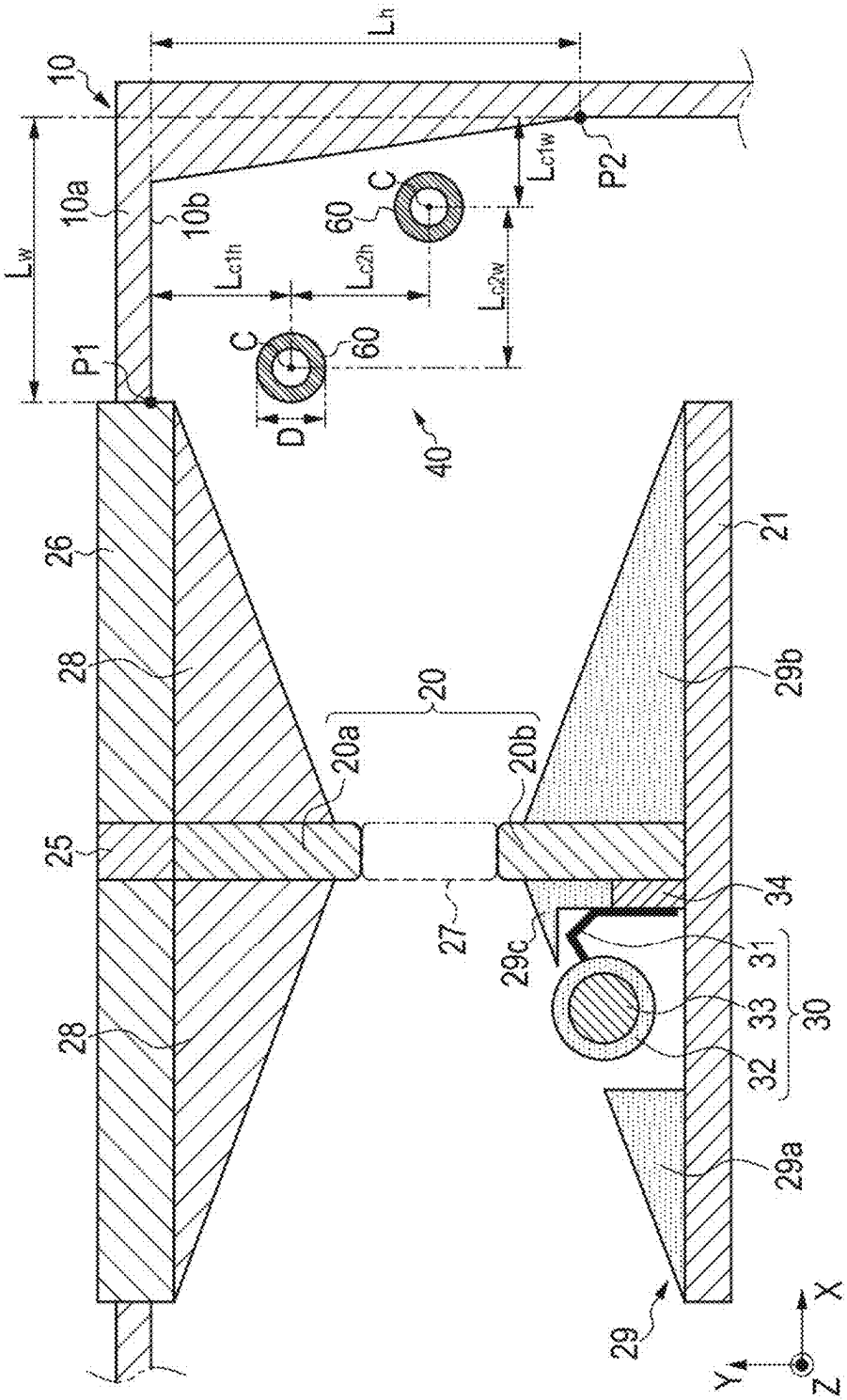
10
10a
10b
Lw
Lh
P1
P2
Lc1h
Lc2h
Lc1w
Lc2w
C
60
D
40
20
20a
20b
21
25
26
27
28
29
29a
29b
29c
30
31
32
33
34
X
Y
Z

FIG. 7

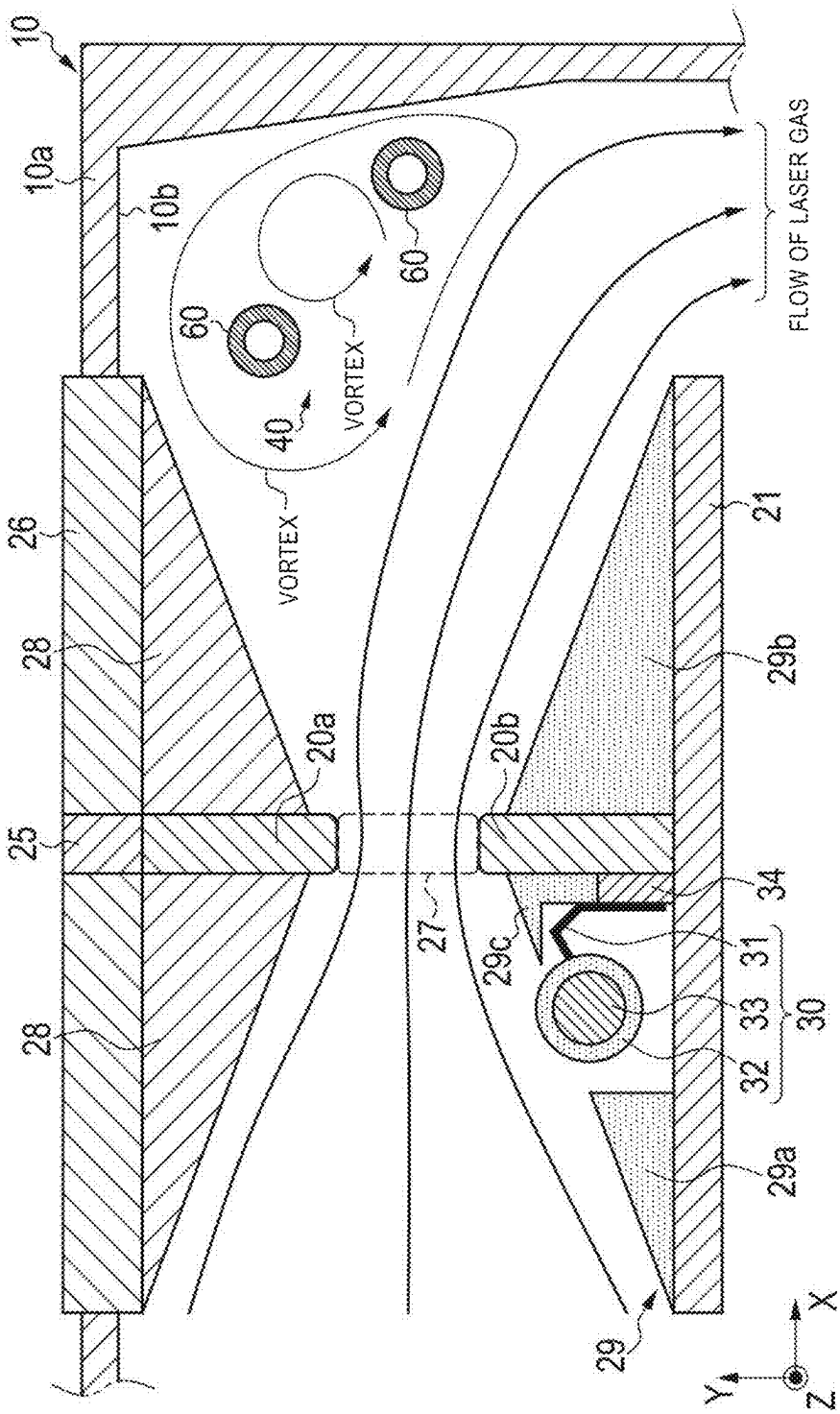
10
10a
10b
60
60
VORTEX
40
VORTEX
FLOW OF LASER GAS
26
28
28
25
20a
20b
27
29c
34
31
33
32
30
21
29b
29a
29
X
Y
Z

FIG. 8

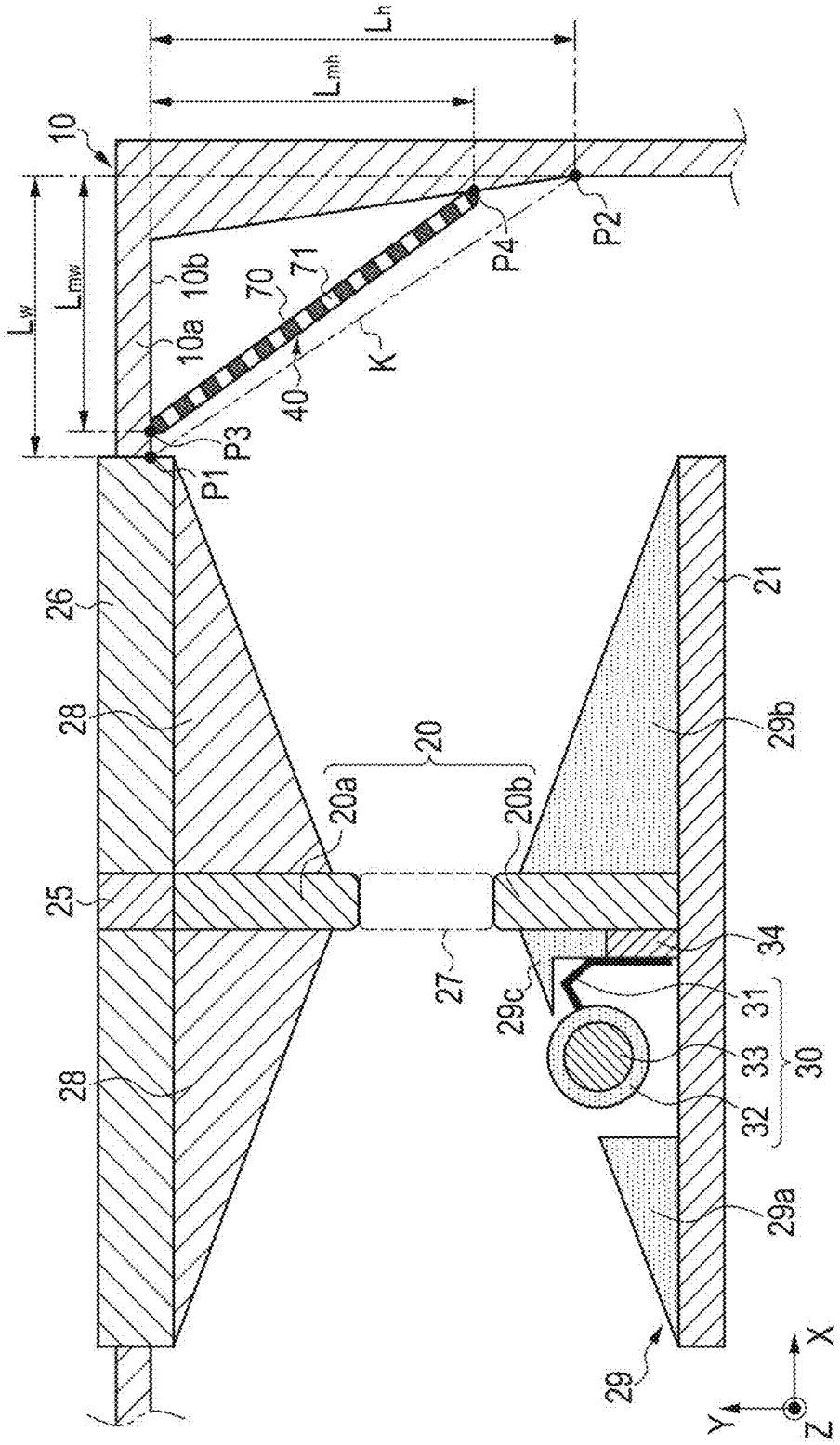
10
L_h
L_{mh}
L_w
L_{mw}
10a
10b
70
71
40
K
P1
P2
P3
P4
26
28
28
25
20
20a
20b
27
29c
21
29b
34
31
33
32
30
29a
29
X
Y
Z

FIG. 9

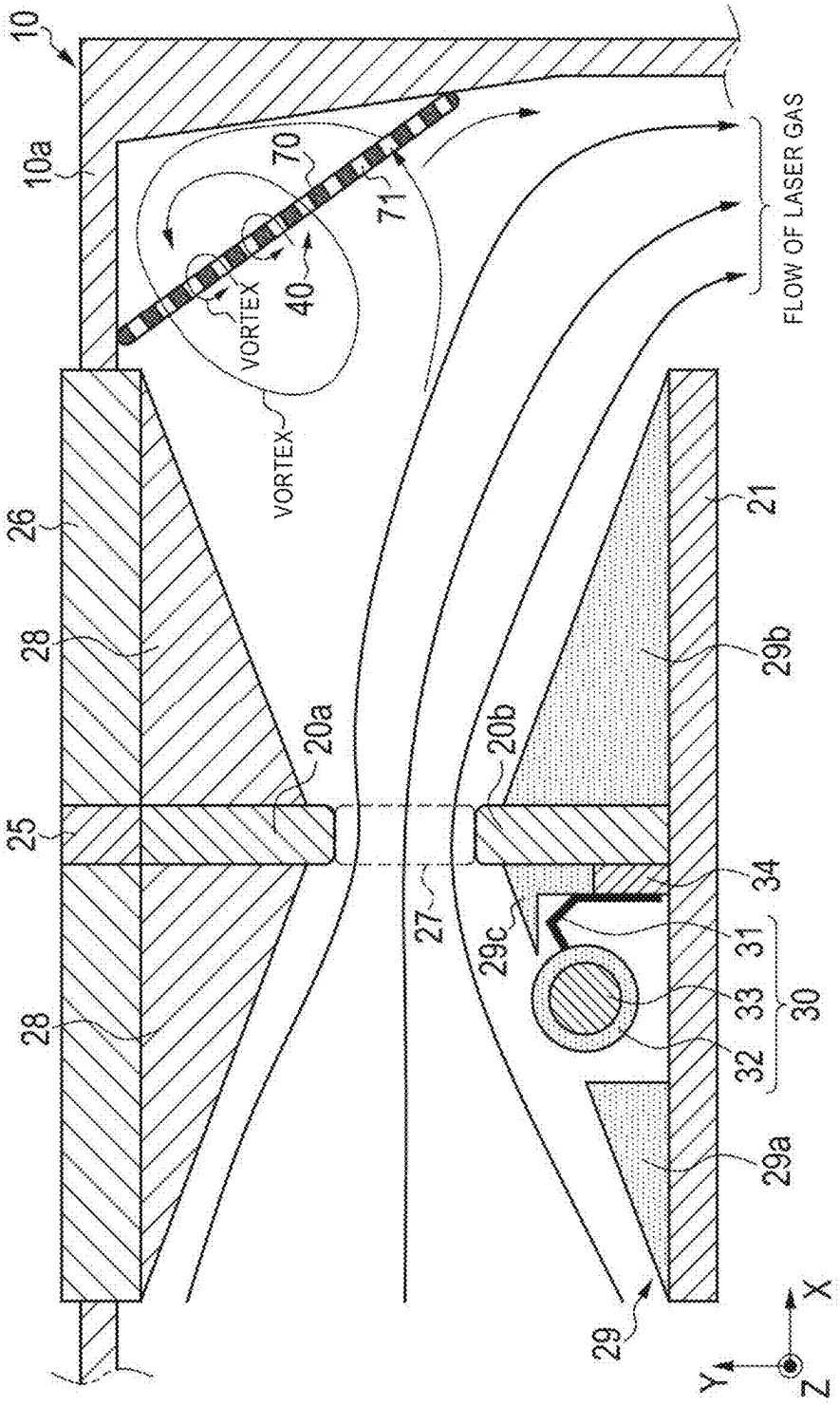
10
10a
70
71
40
VORTEX
VORTEX
FLOW OF LASER GAS
26
28
28
25
20a
20b
27
29c
21
29b
34
31
33
32
30
29a
29
X
Y
Z

FIG. 10

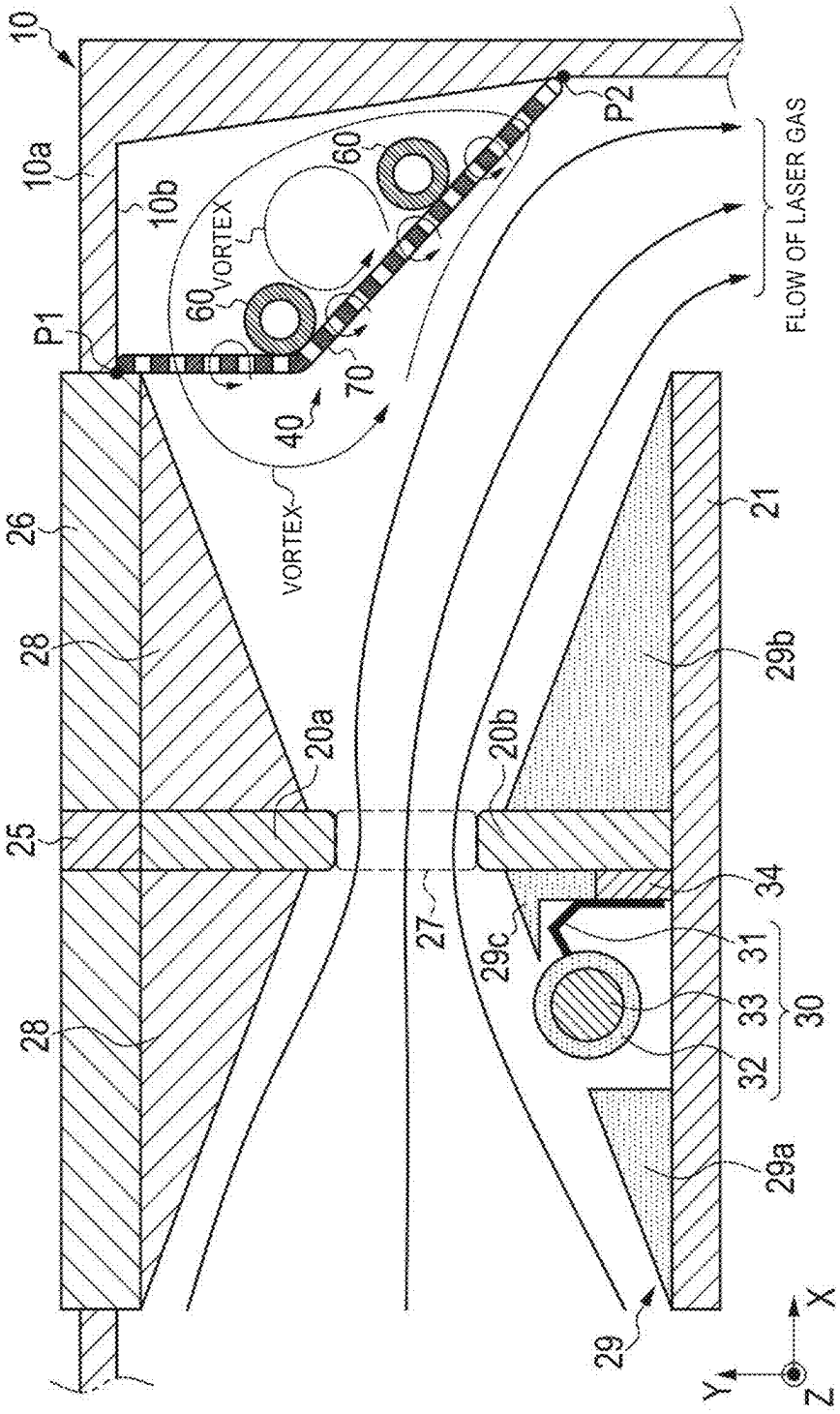
10
10a
10b
P1
P2
60
60
VORTEX
VORTEX
40
70
FLOW OF LASER GAS
26
28
28
25
20a
20b
27
29c
21
29b
29a
29
34
31
33
32
30
X
Y
Z

FIG. 11

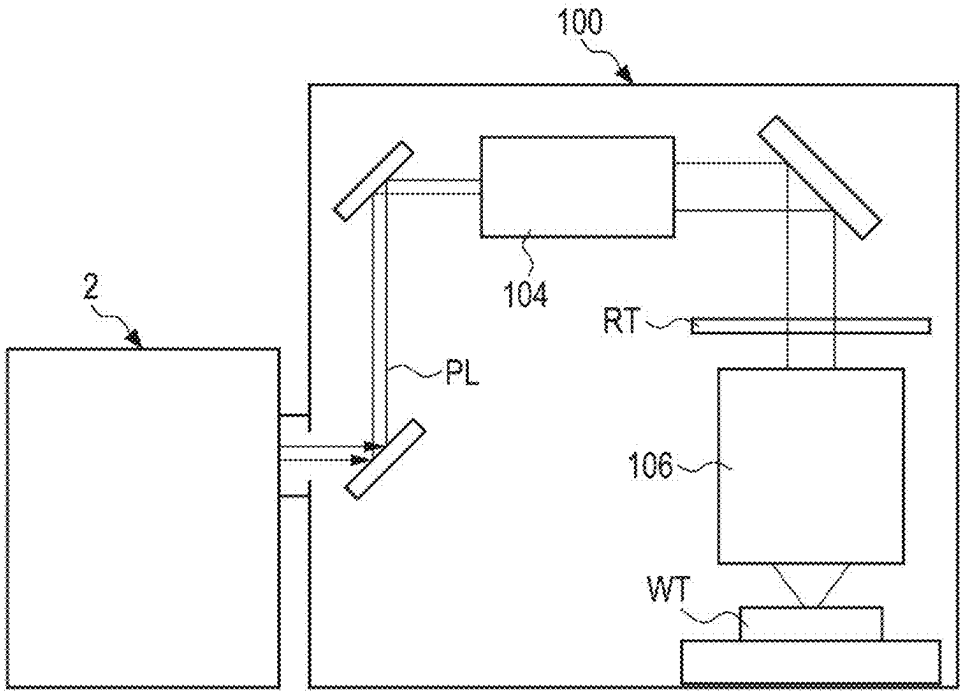

LASER CHAMBER, GAS LASER DEVICE, AND ELECTRONIC DEVICE MANUFACTURING METHOD

CROSS-REFERENCE TO RELATED APPLICATIONS

[0001] The present application claims the benefit of Japanese Patent Application No. 2024-032140, filed on Mar. 4, 2024, the entire contents of which are hereby incorporated by reference.

BACKGROUND

1. Technical Field

[0002] The present disclosure relates to a laser chamber, a gas laser device, and an electronic device manufacturing method.

2. Related Art

[0003] Recently, in a semiconductor exposure apparatus, improvement in resolution has been desired for miniaturization and high integration of semiconductor integrated circuits. For this purpose, an exposure light source that outputs light having a shorter wavelength has been developed. For example, as a gas laser device for exposure, a KrF excimer laser device for outputting laser light having a wavelength of about 248 nm and an ArF excimer laser device for outputting laser light having a wavelength of about 193 nm are used.

[0004] The KrF excimer laser device and the ArF excimer laser device each have a large spectral line width of about 350 to 400 pm in natural oscillation light. Therefore, when a projection lens is formed of a material that transmits ultraviolet rays such as KrF laser light and ArF laser light, there is a case in which chromatic aberration occurs. As a result, the resolution may decrease. Then, a spectral line width of laser light output from the gas laser device needs to be narrowed to the extent that the chromatic aberration can be ignored. For this purpose, there is a case in which a line narrowing module (LNM) including a line narrowing element (etalon, grating, and the like) is provided in a laser resonator of the gas laser device to narrow a spectral line width. In the following, a gas laser device with a narrowed spectral line width is referred to as a line narrowing gas laser device.

LIST OF DOCUMENTS

Patent Documents

[0005] Patent Document 1: U.S. Pat. No. 6,442,181

SUMMARY

[0006] A laser chamber, according to an aspect of the present disclosure, of a gas laser device configured to output laser light, includes a container filled with a laser gas; a first electrode extending in a first direction and arranged in the container; a second electrode arranged at a position closer to an inner wall of the container than the first electrode while extending in the first direction and facing the first electrode in a second direction orthogonal to the first direction; a fan configured to cause the laser gas to flow through a discharge space between the first electrode and the second electrode; an insulating guide arranged on a downstream side of the second electrode; and a vortex dividing member including a plurality of structures extending in the first direction and arranged discretely along a direction in which the laser gas flows on a downstream side of the insulating guide, and configured to divide a vortex generated by a part of a flow of the laser gas.

[0007] A gas laser device, according to an aspect of the present disclosure, is configured to output laser light and includes an optical resonator and a laser chamber arranged to cause an optical path of the optical resonator to pass therethrough. Here, the laser chamber includes a container filled with a laser gas; a first electrode extending in a first direction and arranged in the container; a second electrode arranged at a position closer to an inner wall of the container than the first electrode while extending in the first direction and facing the first electrode in a second direction orthogonal to the first direction; a fan configured to cause the laser gas to flow through a discharge space between the first electrode and the second electrode; an insulating guide arranged on a downstream side of the second electrode; and a vortex dividing member including a plurality of structures extending in the first direction and arranged discretely along a direction in which the laser gas flows on a downstream side of the insulating guide, and configured to divide a vortex generated by a part of a flow of the laser gas.

[0008] An electronic device manufacturing method, according to an aspect of the present disclosure includes generating laser light using a gas laser device, outputting the laser light to an exposure apparatus, and exposing a photosensitive substrate to the laser light in the exposure apparatus to manufacture an electronic device. Here, the gas laser device is configured to output the laser light and includes an optical resonator and a laser chamber arranged to cause an optical path of the optical resonator to pass therethrough. The laser chamber includes a container filled with a laser gas; a first electrode extending in a first direction and arranged in the container; a second electrode arranged at a position closer to an inner wall of the container than the first electrode while extending in the first direction and facing the first electrode in a second direction orthogonal to the first direction; a fan configured to cause the laser gas to flow through a discharge space between the first electrode and the second electrode; an insulating guide arranged on a downstream side of the second electrode; and a vortex dividing member including a plurality of structures extending in the first direction and arranged discretely along a direction in which the laser gas flows on a downstream side of the insulating guide, and configured to divide a vortex generated by a part of a flow of the laser gas.

BRIEF DESCRIPTION OF THE DRAWINGS

[0009] Embodiments of the present disclosure will be described below merely as examples with reference to the accompanying drawings.

[0010] FIG. **1** is a side view schematically showing the configuration of a gas laser device according to a comparative example.

[0011] FIG. **2** is a sectional view schematically showing the configuration of the gas laser device according to the comparative example.

[0012] FIG. **3** is a sectional view showing in detail the configuration of the vicinity of a main electrode of a laser chamber.

[0013] FIG. **4** is a sectional view showing in detail the configuration of the vicinity of the main electrode of the laser chamber according to a first embodiment.

[0014] FIG. **5** is a view showing an example of a flow of a laser gas in the first embodiment.

[0015] FIG. **6** is a sectional view showing in detail the configuration of the vicinity of the main electrode of the laser chamber according to a second embodiment.

[0016] FIG. **7** is a view showing an example of the flow of the laser gas in the second embodiment.

[0017] FIG. **8** is a sectional view showing in detail the configuration of the vicinity of the main electrode of the laser chamber according to a third embodiment.

[0018] FIG. **9** is a view showing an example of the flow of the laser gas in the third embodiment.

[0019] FIG. **10** is a sectional view showing in detail the configuration of the vicinity of the main electrode of the laser chamber according to a fourth embodiment.

[0020] FIG. **11** is a diagram schematically showing a configuration example of an exposure apparatus.

DESCRIPTION OF EMBODIMENTS

<Contents>

1. Comparative Example

1.1 Configuration

1.2 Operation

1.3 Problem

2. First Embodiment

2.1 Configuration

2.2 Operation

2.3 Effect

3. Second Embodiment

3.1 Configuration

3.2 Operation

3.3 Effect

4. Third Embodiment

4.1 Configuration

4.2 Operation

4.3 Effect

5. Fourth Embodiment

5.1 Configuration

5.2 Operation

5.3 Effect

6. Electronic Device Manufacturing Method

[0021] Hereinafter, embodiments of the present disclosure will be described in detail with reference to the drawings. The embodiments described below show some examples of the present disclosure and do not limit the contents of the present disclosure. Also, all configurations and operation described in the embodiments are not necessarily essential as configurations and operation of the present disclosure. Here, the same components are denoted by the same reference numeral, and duplicate description thereof is omitted.

1. Comparative Example

[0022] First, a comparative example of the present disclosure will be described. The comparative example of the present disclosure is an example recognized by the applicant as known only by the applicant, and is not a publicly known example admitted by the applicant.

1.1 Configuration

[0023] The configuration of a gas laser device **2** according to the comparative example will be described using FIGS. **1** and **2**. FIG. **1** schematically shows the configuration of the gas laser device **2**. FIG. **2** is a sectional view of the gas laser device **2** shown in FIG. **1** viewed from a Z direction. The gas laser device **2** is a discharge-excitation-type gas laser device that discharges and excites a laser gas, and is, for example, an excimer laser device.

[0024] In FIG. **1**, the travel direction of pulse laser light PL output from the gas laser device **2** is defined as the Z direction. A discharge direction to be described later is defined as a Y direction. A direction orthogonal to the Z direction and the Y direction is defined as an X direction. Here, the pulse laser light PL is an example of the "laser light" according to the technology of the present disclosure. The Z direction is an example of the "first direction" according to the technology of the present disclosure. The Y direction is an example of the "second direction" according to the technology of the present disclosure. The X direction is an example of the "third direction" according to the technology of the present disclosure.

[0025] In FIG. **1**, the gas laser device **2** includes a laser chamber **10**, a charger **11**, a pulse power module (PPM) **12**, a pulse energy measurement unit **13**, a processor **14**, a pressure sensor **17**, and a laser resonator. The laser resonator is configured of a line narrowing module **15** and an output coupling mirror **16**.

[0026] The laser chamber **10** includes, for example, a container **10***a* made of aluminum metal plated with nickel on the surface thereof. As shown in FIGS. **1** and **2**, a main electrode **20**, a ground plate **21**, wirings **22**, a fan **23**, a heat exchanger **24**, an insulating guide **28**, a conductive guide **29**, and a preionization electrode **30** are provided in the container **10***a*. The preionization electrode **30** includes a preionization outer electrode **31**, a dielectric pipe **32**, and a preionization inner electrode **33**.

[0027] A laser gas containing fluorine as a laser medium is enclosed in the container **10***a*. The laser gas includes, for example, argon, krypton, xenon, or the like as a rare gas, neon, helium, or the like as a buffer gas, and fluorine, chlorine, or the like as a halogen gas. Further, an opening is formed in the container **10***a*. An electrically insulating plate **26** in which a feedthrough **25** is embedded is attached to the container **10***a* via an O-ring (not shown) so as to close the opening. The PPM **12** is arranged on the electrically insulating plate **26**. The container **10***a* is grounded.

[0028] The PPM **12** includes a charging capacitor (not shown) and is connected to the main electrode **20** via the feedthrough **25**. The PPM **12** includes a switch SW for causing discharge to occur at the main electrode **20**. The charger **11** is connected to the charging capacitor of the PPM **12**. Hereinafter, discharge occurring at the main electrode **20** is referred to as main discharge.

[0029] The main electrode **20** includes a cathode electrode **20***a* and an anode electrode **20***b*. The cathode electrode **20***a* and the anode electrode **20***b* are arranged in the container **10***a* so that discharge surfaces of the both face each other. The space between the discharge surface of the cathode electrode **20***a* and the discharge surface of the anode electrode **20***b* is referred to as a discharge space **27**. Each of the cathode electrode **20***a* and the anode electrode **20***b* extends in the Z direction.

[0030] The cathode electrode **20***a* is supported by the electrically insulating plate **26** on a surface opposite to the discharge surface thereof, and is connected to the feedthrough **25**. That is, the cathode electrode **20***a* is arranged closer to the inner wall **10***b* of the container **10***a* than the anode electrode **20***b* while facing the anode electrode **20***b*. The anode electrode **20***b* is supported by the ground plate **21** on a surface opposite to the discharge surface thereof. The anode electrode **20***b* is an example of the "first electrode" according to the technology of the present disclosure. The cathode electrode **20***a* is an example of the "second electrode" according to the technology of the present disclosure.

[0031] The ground plate **21** is connected to the container **10***a* via the wirings **22**. The container **10***a* is grounded. Therefore, the ground plate **21** is grounded via the wirings **22**. An end part of the ground plate **21** in the Z direction is fixed to the container **10***a*.

[0032] The fan **23** is a cross flow fan for circulating the laser gas in the container **10***a*, and is arranged on the opposite side of the discharge space **27** with respect to the ground plate **21**. A motor **23***a* for rotationally driving the fan **23** is connected to the container **10***a*.

[0033] The laser gas blown out from the fan **23** flows into the discharge space **27**. The flow direction of the laser gas flowing into the discharge space **27** is substantially parallel to the X direction. The laser gas flowing out from the discharge space **27** is sucked into the fan **23** via the heat exchanger **24**. The heat exchanger **24** changes the temperature of the laser gas by performing heat exchange between a refrigerant supplied to the inside of the heat exchanger **24** and the laser gas.

[0034] The insulating guide **28** is arranged on a surface of the electrically insulating plate **26** facing the discharge space **27** so as to sandwich the cathode electrode **20***a*. The insulating guide **28** is formed in a shape to guide the flow of the laser gas so that the laser gas from the fan **23** efficiently flows between the cathode electrode **20***a* and the anode electrode **20***b*. The insulating guide **28** and the electrically insulating plate **26** are made of, for example, ceramics such as alumina (Al_2O_3) having low reactivity with the fluorine gas.

[0035] The conductive guide **29** is arranged on a surface of the ground plate **21** facing the discharge space **27** so as to sandwich the anode electrode **20***b*. Similarly to the insulating guide **28**, the conductive guide **29** is formed in a shape to guide the flow of the laser gas so that the laser gas from the fan **23** efficiently flows between the cathode electrode **20***a* and the anode electrode **20***b*. The conductive guide **29** is made of, for example, a porous nickel metal having low reactivity with the fluorine gas.

[0036] A laser gas supply device **18***a* and a laser gas exhaust device **18***b* are connected to the laser chamber **10**. The laser gas supply device **18***a* includes a valve and a flow rate control valve, and is connected to a gas cylinder accommodating the laser gas. The laser gas exhaust device **18***b* includes a valve and an exhaust pump.

[0037] At end parts of the container **10***a*, windows **19***a*, **19***b* for outputting light generated in the container **10***a* to the outside are provided, respectively. The laser chamber **10** is arranged such that the optical path of the optical resonator passes through the discharge space **27** and the windows **19***a*, **19***b*.

[0038] The line narrowing module **15** includes a prism **15***a* and a grating **15***b*. The prism **15***a* transmits the light output from the laser chamber **10** through the window **19***a* toward the grating **15***b* while expanding the beam width of the light.

[0039] The grating **15***b* is arranged in the Littrow arrangement in which the incident angle and the diffraction angle are the same. The grating **15***b* is a wavelength selection element that selectively extracts light having a wavelength near a particular wavelength in accordance with the diffraction angle. The spectral width of the light returning from the grating **15***b* to the laser chamber **10** via the prism **15***a* is line-narrowed.

[0040] The output coupling mirror **16** transmits a part of the light output from the laser chamber **10** through the window **19***b*, and reflects the other part back into the laser chamber **10**. The surface of the output coupling mirror **16** is coated with a partial reflection film.

[0041] Light output from the laser chamber **10** reciprocates between the line narrowing module **15** and the output coupling mirror **16**, and is amplified each time the light passes through the discharge space **27**. A part of the amplified light is output as the pulse laser light PL via the output coupling mirror **16**. The wavelength of the pulse laser light PL is in an ultraviolet range of 150 nm to 380 nm, and is, for example, an oscillation wavelength of an excimer laser device.

[0042] The pulse energy measurement unit **13** is arranged on the optical path of the pulse laser light PL output via the output coupling mirror **16**. The pulse energy measurement unit **13** includes a beam splitter **13***a*, a light concentrating optical system **13***b*, and an optical sensor **13***c*.

[0043] The beam splitter **13***a* transmits the pulse laser light PL with a high transmittance and reflects a part of the pulse laser light PL toward the light concentrating optical system **13***b*. The light concentrating optical system **13***b* concentrates the light reflected by the beam splitter **13***a* on a light receiving surface of the optical sensor **13***c*. The optical sensor **13***c* measures the pulse energy of the light concentrated on the light receiving surface, and outputs the measurement value to the processor **14**.

[0044] The pressure sensor **17** detects the gas pressure in the container **10***a*, and outputs the detection value to the processor **14**. The processor **14** determines the gas pressure of the laser gas in the container **10***a* based on the detection value of the gas pressure and the charge voltage of the charger **11**.

[0045] The charger **11** is a high voltage power source that supplies the charge voltage to the charging capacitor included in the PPM **12**. The switch SW of the PPM **12** is controlled by the processor **14**. When the switch SW is

turned ON from OFF, the PPM **12** generates a high voltage pulse from the electric energy held in the charging capacitor and applies the high voltage pulse to the main electrode **20**.

[0046] The processor **14** is a processing device that transmits and receives various signals to and from an exposure apparatus controller **110** provided in an exposure apparatus **100**. For example, the exposure apparatus controller **110** transmits, to the processor **14**, a target pulse energy of the pulse laser light PL to be output to the exposure apparatus **100**, an oscillation trigger signal, and the like.

[0047] The processor **14** generally controls operation of each component of the gas laser device **2** based on various signals transmitted from the exposure apparatus controller **110**, the measurement value of the pulse energy, the detection value of the gas pressure, and the like.

[0048] The processor **14** functions as a controller of the gas laser device **2**. For example, the processor **14** is a processing device including a storage device in which a control program is stored and a central processing unit (CPU) that executes the control program. The processor **14** is specifically configured or programmed to perform various processes included in the present disclosure. The storage device is a non-transitory computer-readable storage medium, and includes, for example, a memory that is a main storage device and a storage that is an auxiliary storage device. Here, the storage device may be a semiconductor memory, a hard disk drive (HDD) device, a solid state drive (SSD) device, or a combination thereof.

[0049] Here, the gas laser device **2** is not necessarily limited to a line narrowing laser device, and may be a laser device that outputs natural oscillation light. For example, a high reflection mirror may be arranged in place of the line narrowing module **15**.

[0050] FIG. **3** shows in detail the configuration of the vicinity of the main electrode **20** of the laser chamber **10**. In the following description, the upstream side refers to a side, with respect to the discharge space **27**, from which the laser gas flows into the discharge space **27**. The downstream side refers to a side, with respect to the discharge space **27**, to which the laser gas flows out from the discharge space **27**.

[0051] The preionization outer electrode **31** is arranged between the anode electrode **20***b* and the dielectric pipe **32**, and is held in contact with a side surface of a holding member **34** made of metal. The holding member **34** is fixed to an upstream side surface of the anode electrode **20***b*. The preionization inner electrode **33** is arranged in the dielectric pipe **32**, and the preionization outer electrode **31** is in contact with the outside of the dielectric pipe **32**.

[0052] The insulating guide **28** is arranged so as to cover the upstream and downstream side surfaces of the cathode electrode **20***a*. The surface of the insulating guide **28** is inclined so as to be closer to the electrically insulating plate **26** as the distance from the cathode electrode **20***a* increases.

[0053] The conductive guide **29** includes a first guide member **29***a*, a second guide member **29***b*, and a third guide member **29***c*. The first guide member **29***a* and the third guide member **29***c* are arranged upstream of the anode electrode **20***b*. The second guide member **29***b* is arranged downstream of the anode electrode **20***b*.

[0054] The first guide member **29***a* is arranged on the ground plate **21** so as to guide the laser gas to the discharge space **27**. The dielectric pipe **32** is arranged between the first guide member **29***a* and the anode electrode **20***b* so as to be spaced apart from each of the ground plate **21** and the anode electrode **20***b*. The second guide member **29***b* is arranged on the ground plate **21** downstream of the anode electrode **20***b* so as to cover the downstream side surface of the anode electrode **20***b*.

[0055] The third guide member **29***c* is arranged between the dielectric pipe **32** and the anode electrode **20***b* so as to cover the upstream side surface of the anode electrode **20***b* and to guide the laser gas to the discharge space **27**. The third guide member **29***c* is close to the dielectric pipe **32**.

[0056] The surface of the conductive guide **29** is inclined as a whole so as to be closer to the ground plate **21** as the distance from the anode electrode **20***b* increases.

[0057] As described above, the insulating guide **28** and the conductive guide **29** form a flow path of the laser gas. To maximize the flow rate of the laser gas flowing through the discharge space **27** and to suppress acoustic waves generated by main discharge from being reflected and returning to the discharge space **27**, the flow path width in the Y direction is set to be wider as the distance from the discharge space **27** increases. Further, to suppress the acoustic waves generated by main discharge from being reflected by the inner wall **10***b* in the container **10***a* and returning to the discharge space **27**, a part of the inner wall **10***b* facing the discharge space **27** in the X direction is inclined with respect to the Y direction which is the discharge direction. Here, the acoustic waves are compressional waves of the laser gas.

[0058] Each of the upstream and downstream side surfaces of the cathode electrode **20***a* in the vicinity of the discharge surface thereof are not covered with the insulating guide **28**, and the cathode electrode **20***a* protrudes from the surface of the insulating guide **28** toward the anode electrode **20***b*. Thus, the discharge surface of the cathode electrode **20***a* is spaced apart from the surface of the insulating guide **28**.

[0059] Each of the upstream and downstream side surfaces of the anode electrode **20***b* in the vicinity of the discharge surface thereof are not covered with the conductive guide **29**, and the anode electrode **20***b* protrudes from the surface of the conductive guide **29** toward the cathode electrode **20***a*. Thus, the discharge surface of the anode electrode **20***b* is spaced apart from the surface of the conductive guide **29**.

1.2 Operation

[0060] Next, operation of the gas laser device **2** according to the comparative example will be described. First, the processor **14** controls the laser gas supply device **18***a* to supply the laser gas into the container **10***a* of the laser chamber **10**, and drives the motor **23***a* to rotate the fan **23**. As a result, as indicated by arrows in FIG. **2**, the laser gas filled in the container **10***a* circulates.

[0061] The processor **14** receives the target pulse energy and the oscillation trigger signal transmitted from the exposure apparatus controller **110**. Here, the oscillation trigger signal is a signal for instructing the gas laser device **2** to output one pulse of the pulse laser light PL. The processor **14** sets the charge voltage corresponding to the target pulse energy in the charger **11**. The processor **14** operates the switch SW of the PPM **12** in synchronization with the oscillation trigger signal.

[0062] When the switch SW of the PPM **12** is turned ON from OFF, a voltage is applied to each between the preionization inner electrode **33** and the preionization outer electrode **31** of the preionization electrode **30** and between the cathode electrode **20***a* and the anode electrode **20***b*. As a result, corona discharge occurs at the preionization electrode

30, and ultraviolet (UV) light is generated. When the laser gas in the discharge space **27** is irradiated with the UV light, the laser gas is preionized.

[0063] Thereafter, when the voltage between the cathode electrode **20***a* and the anode electrode **20***b* reaches a breakdown voltage, main discharge occurs in the discharge space **27**. When the discharge direction of main discharge is defined as a direction in which electrons flow, the discharge direction is the direction from the cathode electrode **20***a* toward the anode electrode **20***b*. When main discharge occurs, the laser gas in the discharge space **27** is excited to emit light.

[0064] The light emitted from the laser gas is reflected by the line narrowing module **15** and the output coupling mirror **16** and reciprocates in the laser resonator, thereby performing laser oscillation. The light line-narrowed by the line narrowing module **15** is output from the output coupling mirror **16** as the pulse laser light PL.

[0065] A part of the pulse laser light PL output from the output coupling mirror **16** enters the pulse energy measurement unit **13**. The pulse energy measurement unit **13** measures the pulse energy of the entering pulse laser light PL, and outputs the measurement value to the processor **14**.

[0066] The processor **14** calculates a difference ΔE between the measurement value of the pulse energy and the target pulse energy. The processor **14** performs feedback control on the charge voltage based on the difference ΔE so that the measurement value of the pulse energy becomes the target pulse energy.

[0067] When the charge voltage is higher than a maximum value of an allowable range, the processor **14** controls the laser gas supply device **18***a* to supply the laser gas into the container **10***a* until a predetermined pressure is reached. Further, when the charge voltage is lower than a minimum value of the allowable range, the processor **14** controls the laser gas exhaust device **18***b* to exhaust the laser gas from the container **10***a* until a predetermined pressure is reached.

[0068] The pulse laser light transmitted through the pulse energy measurement unit **13** enters the exposure apparatus **100**.

1.3 Problem

[0069] FIG. **3** shows a flow of the laser gas circulating through the container **10***a*. The laser gas having passed through the discharge space **27** from the upstream side changes the travel direction at the space on the downstream side, and then flows toward the heat exchanger **24**. At the space on the downstream side, there is a region in which stagnation occurs. In this region, a vortex is generated by a part of the flow of the laser gas. The vortex compresses the flow path of the laser gas and serves as a resistance source for the flow of the laser gas. As a result, the flow rate of the laser gas flowing through the discharge space **27** decreases, discharge products generated by main discharge remain in the discharge space **27**, and the main discharge becomes unstable, so that the energy stability of the pulse laser light PL deteriorates.

[0070] Accordingly, an object of the present disclosure is to provide a laser chamber, a gas laser device, and an electronic device manufacturing method that can improve the flow rate of the laser gas flowing through the discharge space **27**.

2. First Embodiment

2.1 Configuration

[0071] The gas laser device **2** according to a first embodiment of the present disclosure has a configuration similar to that of the gas laser device **2** according to the comparative example except that the configuration of the laser chamber **10** is different.

[0072] FIG. **4** shows in detail the configuration of the vicinity of the main electrode **20** of the laser chamber **10** according to the first embodiment. In the present embodiment, a vortex dividing member **40** for dividing the vortex described above is provided in the container **10***a*. In the present embodiment, the vortex dividing member **40** is configured of a plurality of structures **50** discretely arranged along the flow of the laser gas on the downstream side with respect to the insulating guide **28** arranged on the downstream side of the cathode electrode **20***a*. The plurality of structures **50** are arranged with a gap therebetween. FIG. **4** shows a case in which the vortex dividing member **40** includes two structures **50**.

[0073] The structure **50** has an L-shaped cross section in an XY plane perpendicular to the Z direction. The structure **50** is a so-called bracket. The structure **50** extends in the Z direction while maintaining the same cross-sectional shape, and both end portions in the Z direction are fixed to the inner wall **10***b* of the container **10***a*. In addition to having the both end portions thereof fixed to the inner wall **10***b*, the structure **50** may be supported by a support column (not shown) connected to the inner wall **10***b*.

[0074] The structure **50** is preferably formed of, for example, aluminum on which nickel electroless plating is performed, alumina ceramic, nickel, or the like.

[0075] The structure **50** has two straight portions **51** perpendicular to each other in the XY plane. The two straight portions **51** have the same length and are connected to each other at the end portions thereof. The structure **50** is arranged such that each of the two straight portions **51** is inclined with respect to the Y direction, which is the discharge direction, to suppress reflected acoustic waves from returning to the discharge space **27**.

[0076] The size and arrangement of the plurality of structures **50** are preferably determined such that the following conditions are satisfied in order to divide the vortex and suppress acoustic waves from returning to the discharge space **27**.

[0077] First, in the XY plane, a point at which the inner wall **10***b* is in contact with the insulating guide **28** on the downstream side of the cathode electrode **20***a* is defined as a first point P**1**, and a point at which the inner wall **10***b* becomes parallel to the discharge direction is defined as a second point P**2**. In the present disclosure, "being in contact" is not limited to "being contacted", but includes "being close." In FIG. **4**, the first point P**1** is the point at which the inner wall **10***b* is connected to the electrically insulating plate **26** in the XY plane. The second point P**2** is an end portion of an inclined surface of the inner wall **10***b* that is inclined with respect to the discharge direction. Further, a distance between the first point P**1** and the second point P**2** in the Y direction is defined as a first distance L_h, and a distance between the first point P**1** and the second point P**2** in the X direction is defined as a second distance L_w.

[0078] When the number of structures **50** included in the vortex dividing member **40** is N and the length of each of the

two straight portions **51** is S, it is preferable that the following Expressions (1) and (2) are satisfied.

$$S \leq L_h/(2N) \quad (1)$$

$$S \leq L_w/(2N) \quad (2)$$

[0079] A point at which the two straight portions **51** are connected to each other is defined as an apex A of the structure **50**. When the distance in the Y direction between the apex A of the structure **50** closest to the first point P**1** among the plurality of structures **50** and the inner wall **10***b* is defined as L_{a1h}, the following Expression (3) is preferably satisfied.

$$0 < L_{a1h} \leq L_h/(2N) \quad (3)$$

[0080] Further, when the distance in the X direction between the apex A of the structure **50** closest to the second point P**2** among the plurality of structures **50** and the inner wall **10***b* is defined as L_{a1w}, the following Expression (4) is preferably satisfied.

$$0 < L_{a1w} \leq L_w/(2N) \quad (4)$$

[0081] Here, the above Expressions (3) and (4) include a range in which the orientation of the structure **50** in the XY plane is limited in order to avoid contacting with the inner wall **10***b*.

[0082] When the distance in the Y direction between the apexes A of two adjacent structures **50** is defined as L_{a2h}, the following Expression (5) is preferably satisfied.

$$L_{a2h} \leq (L_h - S/2 - L_{a1h})/(N-1) \quad (5)$$

[0083] Further, when the distance in the X direction between the apexes A of two adjacent structures **50** is defined as L_{a2w}, the following Expression (6) is preferably satisfied.

$$L_{a2w} \leq (L_w - S/2 - L_{a1w})/(N-1) \quad (6)$$

[0084] Here, two adjacent structures **50** refer to a combination of one structure **50** and another structure **50** having an apex A closest to the apex A of the one structure **50**.

2.2 Operation

[0085] Operation of the gas laser device **2** according to the present embodiment is similar to that of the comparative example except that the effect caused by provision of the vortex dividing member **40** in the container **10***a* is different.

[0086] FIG. **5** shows an example of the flow of the laser gas in the first embodiment. As shown in FIG. **5**, in the present embodiment, as in the comparative example, stagnation occurs in a space on the downstream side with respect to the discharge space **27**, and a vortex is generated in a region at which the stagnation is occurring, but the vortex is divided into a plurality of small vortices by the vortex dividing member **40**.

2.3 Effect

[0087] In the present embodiment, since the vortex is divided into a plurality of small vortices by the vortex dividing member **40**, a flow path resistance of the laser gas due to the vortex is reduced. As a result, the flow rate of the laser gas flowing through the discharge space **27** is increased and discharge products remaining in the discharge space **27** are reduced, so that the stability of main discharge is improved and the energy stability of the pulse laser light PL is improved. The applicant of the present invention performed a simulation using "SOLIDWORKS 2019 Flow Simulation" which is a thermal fluid analysis software of Solidworks Corporation, and confirmed that, in the present embodiment, the flow rate was improved by 2% as compared with the comparative example.

[0088] Further, the vortex dividing member **40** is configured by the plurality of structures **50** arranged discretely along the flow of the laser gas, and since the area thereof for reflecting acoustic waves is small, it is possible to suppress acoustic waves from being reflected by the vortex dividing member **40** and returning to the discharge space **27**. Further, since the two straight portions **51** are arranged to be inclined with respect to the Y direction, which is the discharge direction, acoustic waves can be further suppressed from returning to the discharge space **27**. By suppressing acoustic waves from returning to the discharge space **27** as described above, the energy stability of the pulse laser light PL is further improved.

3. Second Embodiment

3.1 Configuration

[0089] The gas laser device **2** according to a second embodiment of the present disclosure has a configuration similar to that of the gas laser device **2** according to the first embodiment except that the configuration of the laser chamber **10** is different.

[0090] FIG. **6** shows in detail the configuration of the vicinity of the main electrode **20** of the laser chamber **10** according to the second embodiment. In the present embodiment, similarly to the first embodiment, the vortex dividing member **40** for dividing the vortex described above is provided in the container **10***a*. In the present embodiment, the vortex dividing member **40** is configured of a plurality of structures **60** discretely arranged along the flow of the laser gas on the downstream side with respect to the insulating guide **28** arranged on the downstream side of the cathode electrode **20***a*. FIG. **6** shows a case in which the vortex dividing member **40** includes two structures **60**.

[0091] The structure **60** has the same configuration as the structure **50** of the first embodiment except that the cross-sectional shape thereof is different. The structure **60** has a circular outer shape in a cross section in the XY plane perpendicular to the Z direction. The structure **60** is a so-called cylindrical bar. In the present embodiment, the structure **60** is a hollow cylinder having a circular hollow portion. Here, the structure **60** may be a solid cylinder not having a hollow portion.

[0092] The structure **60** extends in the Z direction while maintaining the same cross-sectional shape, and both end portions in the Z direction are fixed to the inner wall **10***b* of the container **10***a*. In addition to having the both end portions thereof fixed to the inner wall **10***b*, the structure **60** may be supported by a support column (not shown) connected to the inner wall **10***b*.

[0093] The structure **60** is preferably formed of, for example, aluminum on which nickel electroless plating is performed, alumina ceramic, nickel, or the like.

[0094] The size and arrangement of the plurality of structures **60** are preferably determined such that the following conditions are satisfied in order to divide the vortex and suppress acoustic waves from returning to the discharge space **27**. Here, definitions of the first point P**1**, the second

point P**2**, the first distance L_h, and the second distance L_w are similar to those in the first embodiment.

[0095] When the number of structures **60** included in the vortex dividing member **40** is N and an outer diameter of the structure **60** is D, the following Expressions (7) and (8) are preferably satisfied.

$$D \leq L_h/(2N) \quad (7)$$

$$D \leq L_w/(2N) \quad (8)$$

[0096] When the distance in the Y direction between a center C of the structure **60** closest to the first point P**1** among the plurality of structures **60** and the inner wall **10***b* is defined as L_{c1h}, the following Expression (9) is preferably satisfied.

$$0 < L_{c1h} \leq L_h/(2N) \quad (9)$$

[0097] Further, when the distance in the X direction between the center C of the structure **60** closest to the second point P**2** among the plurality of structures **60** and the inner wall **10***b* is defined as L_{c1w}, the following Expression (10) is preferably satisfied.

$$0 < L_{c1w} \leq L_w/(2N) \quad (10)$$

[0098] When the distance in the Y direction between the centers C of two adjacent structures **60** is defined as L_{c2h}, the following Expression (11) is preferably satisfied.

$$L_{c2h} \leq (L_h - D/2 - L_{c1h})/(N-1) \quad (11)$$

[0099] Further, when the distance in the X direction between the centers C of two adjacent structures **60** is defined as L_{c2w}, the following Expression (12) is preferably satisfied.

$$L_{c2w} \leq (L_w - D/2 - L_{c1w})/(N-1) \quad (12)$$

[0100] Here, two adjacent structures **60** refer to a combination of one structure **60** and another structure **60** having a center C closest to the center C of the one structure **60**.

3.2 Operation

[0101] Operation of the gas laser device **2** according to the present embodiment is similar to that of the comparative example except that the effect caused by provision of the vortex dividing member **40** in the container **10***a* is different.

[0102] FIG. **7** shows an example of the flow of the laser gas in the second embodiment. As shown in FIG. **7**, in the present embodiment, similarly to the first embodiment, the vortex is divided into a plurality of small vortices by the vortex dividing member **40**.

3.3 Effect

[0103] In the present embodiment, similarly to the first embodiment, the vortex is divided into a plurality of small vortices by the vortex dividing member **40**, so that the energy stability of the pulse laser light PL is improved. Further, by performing a simulation, in the present embodiment, it was confirmed that the flow rate was improved by 1% as compared with the comparative example.

[0104] Further, in the present embodiment as well, the vortex dividing member **40** is configured by the plurality of structures **60** arranged discretely along the flow of the laser gas, and since the area thereof for reflecting acoustic waves is small, it is possible to suppress acoustic waves from being reflected by the vortex dividing member **40** and returning to the discharge space **27**. Further, in the present embodiment, since the structure **60** has a circular outer shape in a cross section, acoustic waves can be further suppressed from returning to the discharge space **27**. By suppressing acoustic waves from returning to the discharge space **27** as described above, the energy stability of the pulse laser light PL is further improved.

4. Third Embodiment

4.1 Configuration

[0105] The gas laser device **2** according to a third embodiment of the present disclosure has a configuration similar to that of the gas laser device **2** according to the first embodiment except that the configuration of the laser chamber **10** is different.

[0106] FIG. **8** shows in detail the configuration of the vicinity of the main electrode **20** of the laser chamber **10** according to the third embodiment. In the present embodiment, similarly to the first embodiment, the vortex dividing member **40** for dividing the vortex described above is provided in the container **10***a*. In the present embodiment, the vortex dividing member **40** is a mesh plate **70** arranged along the flow of the laser gas on the downstream side with respect to the insulating guide **28** arranged on the downstream side of the cathode electrode **20***a*.

[0107] The mesh plate **70** extends in the Z direction while maintaining the same cross-sectional shape, and both end portions in the Z direction are fixed to the inner wall **10***b* of the container **10***a*. Further, both ends of the mesh plate **70** in the XY plane are in contact with the inner wall **10***b*. In addition to having the both end portions thereof fixed to the inner wall **10***b*, the mesh plate **70** may be supported by a support column (not shown) connected to the inner wall **10***b*.

[0108] The mesh plate **70** is a mesh-like member and has a plurality of openings **71** arranged two-dimensionally. That is, the mesh plate **70** is configured by a plurality of structures discretely arranged along the flow of the laser gas.

[0109] The mesh plate **70** is preferably formed of, for example, aluminum on which nickel electroless plating is performed, alumina ceramic, nickel, or the like.

[0110] The mesh plate **70** is preferably arranged such that the following conditions are satisfied in order to divide the vortex and suppress acoustic waves from returning to the discharge space **27**. Here, definitions of the first point P**1**, the second point P**2**, the first distance L_h, and the second distance L_w are similar to those in the first embodiment.

[0111] Of the two points at which the mesh plate **70** and the inner wall **10***b* are in contact with each other in the XY plane, a point closer to the first point P**1** is referred to as a third point P**3**, and a point closer to the second point P**2** is referred to as a fourth point P**4**. When the distance between the third point P**3** and the fourth point P**4** in the Y direction is defined as L_{mh}, the following Expression (13) is preferably satisfied.

$$0.25L_h \leq L_{mh} \leq L_h \quad (13)$$

[0112] Further, when the distance between the third point P**3** and the fourth point P**4** in the X direction is defined as L_{mw}, the following Expression (14) is preferably satisfied.

$$0.25L_w \leq L_{mw} \leq L_w \quad (14)$$

[0113] As described above, the mesh plate **70** is preferably arranged in a space defined by the inner wall **10***b* and a straight line K connecting the first point P**1** and the second point P**2**.

[0114] In the present embodiment, the mesh plate **70** is arranged on a straight line connecting the third point P**3** and the fourth point P**4** in the XY plane, but may be arranged on a curved line connecting the third point P**3** and the fourth point P**4**.

[0115] In order to suppress acoustic waves from returning to the discharge space **27**, the mesh plate **70** preferably has, for example, two or more openings **71** per square inch. Further, the mesh plate **70** preferably has an aperture ratio of 50% or more and 80% or less.

4.2 Operation

[0116] Operation of the gas laser device **2** according to the present embodiment is similar to that of the comparative example except that the effect caused by provision of the vortex dividing member **40** in the container **10***a* is different.

[0117] FIG. **9** shows an example of the flow of the laser gas in the third embodiment. As shown in FIG. **9**, in the present embodiment, similarly to the first embodiment, the vortex is divided into a plurality of small vortices by the vortex dividing member **40**.

4.3 Effect

[0118] In the present embodiment, similarly to the first embodiment, the vortex is divided into a plurality of small vortices by the vortex dividing member **40**, so that the energy stability of the pulse laser light PL is improved. Further, by performing a simulation, in the present embodiment, it was confirmed that the flow rate was improved by 1% as compared with the comparative example.

[0119] Further, in the present embodiment, the vortex dividing member **40** is the mesh plate **70** configured by a plurality of structures arranged discretely along the flow of the laser gas, and since the area thereof for reflecting acoustic waves is small, it is possible to suppress acoustic waves from being reflected by the vortex dividing member **40** and returning to the discharge space **27**. By suppressing acoustic waves from returning to the discharge space **27** as described above, the energy stability of the pulse laser light PL is further improved.

5. Fourth Embodiment

5.1 Configuration

[0120] The gas laser device **2** according to a fourth embodiment of the present disclosure has a configuration similar to that of the gas laser device **2** according to the first embodiment except that the configuration of the laser chamber **10** is different.

[0121] FIG. **10** shows in detail the configuration of the vicinity of the main electrode **20** of the laser chamber **10** according to the fourth embodiment. In the present embodiment, similarly to the first embodiment, the vortex dividing member **40** for dividing the vortex described above is provided in the container **10***a*. In the present embodiment, the vortex dividing member **40** is configured by combining the plurality of structures **60** and the mesh plate **70**.

[0122] The structure **60** has the same configuration as the structure **60** described in the second embodiment. The mesh plate **70** has the same configuration as the mesh plate **70** described in the third embodiment. The size and arrangement of the plurality of structures **60** may be the same as those in the second embodiment. The arrangement and aperture ratio of the mesh plate **70** may be the same as those in the second embodiment.

[0123] The mesh plate **70** is arranged on a curved line so as to avoid the plurality of structures **60**. In the present embodiment, the plurality of structures **60** are arranged in a space surrounded by the mesh plate **70** and the inner wall **10***b*, and the plurality of structures **60** are in contact with the mesh plate **70**.

5.2 Operation

[0124] Operation of the gas laser device **2** according to the present embodiment is similar to that of the comparative example except that the effect caused by provision of the vortex dividing member **40** in the container **10***a* is different.

[0125] FIG. **10** shows an example of the flow of the laser gas in the fourth embodiment. As shown in FIG. **10**, in the present embodiment, the vortex may be divided into a plurality of smaller vortices by the vortex dividing member **40** than in the second embodiment or the third embodiment.

5.3 Effect

[0126] According to the present embodiment, since the vortex can be divided into a plurality of smaller vortices than in the second embodiment or the third embodiment, the flow path resistance can be further reduced, and the flow rate of the laser gas flowing through the discharge space **27** can be further improved. As a result, the energy stability of the pulse laser light PL can be further improved.

[0127] Here, the vortex dividing member **40** may be configured by combining the plurality of structures **50** and the mesh plate **70**. The structure **50** has the same configuration as the structure **50** described in the first embodiment.

6. Electronic Device Manufacturing Method

[0128] FIG. **11** schematically shows a configuration example of the exposure apparatus **100**. The exposure apparatus **100** includes an illumination optical system **104** and a projection optical system **106**. For example, the illumination optical system **104** illuminates a reticle pattern of a reticle (not shown) arranged on a reticle stage RT with the pulse laser light PL incident from the gas laser device **2**. The projection optical system **106** causes the pulse laser light PL transmitted through the reticle to be imaged as being reduced and projected on a workpiece (not shown) arranged on a workpiece table WT. The workpiece is a photosensitive substrate such as a semiconductor wafer on which photoresist is applied.

[0129] The exposure apparatus **100** synchronously translates the reticle stage RT and the workpiece table WT to expose the workpiece to the pulse laser light PL reflecting the reticle pattern. After the reticle pattern is transferred onto the semiconductor wafer by the exposure process described above, a semiconductor device can be manufactured through a plurality of processes. The semiconductor device is an example of the "electronic device" in the present disclosure.

[0130] Here, not limited to the manufacturing of an electronic device, the gas laser device **2** may be used for laser processing such as drilling.

[0131] The description above is intended to be illustrative and the present disclosure is not limited thereto. Therefore, it would be obvious to those skilled in the art that various modifications to the embodiments of the present disclosure would be possible without departing from the spirit and the scope of the appended claims.

[0132] The terms used throughout the present specification and the appended claims should be interpreted as non-limiting terms. For example, terms such as "comprise", "include", "have", and "contain" should not be interpreted to be exclusive of other structural elements. Further, indefinite articles "a/an" described in the present specification and the appended claims should be interpreted to mean "at least one" or "one or more." Further, "at least one of A, B, and C" should be interpreted to mean any of A, B, C, A+B, A+C, B+C, and A+B+C as well as to include combinations of the any thereof and any other than A, B, and C.

What is claimed is:

1. A laser chamber of a gas laser device configured to output laser light, the laser chamber comprising:

a container filled with a laser gas;

a first electrode extending in a first direction and arranged in the container;

a second electrode arranged at a position closer to an inner wall of the container than the first electrode while extending in the first direction and facing the first electrode in a second direction orthogonal to the first direction;

a fan configured to cause the laser gas to flow through a discharge space between the first electrode and the second electrode;

an insulating guide arranged on a downstream side of the second electrode; and

a vortex dividing member including a plurality of structures extending in the first direction and arranged discretely along a direction in which the laser gas flows on a downstream side of the insulating guide, and configured to divide a vortex generated by a part of a flow of the laser gas.

2. The laser chamber according to claim **1**,

wherein each of the structures is a bracket including two straight portions whose cross sections in a plane perpendicular to the first direction are perpendicular to each other.

3. The laser chamber according to claim **2**,

wherein $S \leq L_h/(2N)$ and $S \leq L_w/(2N)$ are satisfied,

where, in the plane perpendicular to the first direction, a point at which the inner wall is in contact with the insulating guide on the downstream side of the second electrode is defined as a first point, a point at which an inclined surface of the inner wall becomes parallel to the second direction is defined as a second point, a direction orthogonal to the first direction and the second direction is defined as a third direction, a distance in the second direction between the first point and the second point is defined as L_h, a distance in the third direction between the first point and the second point is defined as L_w, a number of the structures configuring the vortex dividing member is defined as N, and a length of each of the two straight portions is defined as S.

4. The laser chamber according to claim **3**,

wherein $0 < L_{a1h} \leq L_h/(2N)$ is satisfied, where a distance in the second direction between an apex of the structure closest to the first point among the plurality of structures and the inner wall is defined as L_{a1h}.

5. The laser chamber according to claim **4**,

wherein $0 < L_{a1w} L_w/(2N)$ is satisfied, where a distance in the third direction between an apex of the structure closest to the second point among the plurality of structures and the inner wall is defined as L_{a1w}.

6. The laser chamber according to claim **5**,

wherein $L_{a2h} \leq (L_h - S/2 - L_{a1h})/(N-1)$ is satisfied, where a distance in the second direction between apexes of two of the structures adjacent to each other is defined as L_{a2h}.

7. The laser chamber according to claim **6**,

wherein $L_{a2w} \leq (L_w - S/2 - L_{a1w})/(N-1)$ is satisfied, where a distance in the third direction between the apexes of two of the structures adjacent to each other is defined as L_{a2w}.

8. The laser chamber according to claim **1**,

wherein each of the structures is a cylinder having a circular outer shape in a cross section in a plane perpendicular to the first direction.

9. The laser chamber according to claim **8**,

wherein $D \leq L_h/(2N)$ and $D \leq L_w/(2N)$ are satisfied,

where, in the plane perpendicular to the first direction, a point at which the inner wall is in contact with the insulating guide on the downstream side of the second electrode is defined as a first point, a point at which an inclined surface of the inner wall becomes parallel to the second direction is defined as a second point, a direction orthogonal to the first direction and the second direction is defined as a third direction, a distance in the second direction between the first point and the second point is defined as L_h, a distance in the third direction between the first point and the second point is defined as L_w, a number of the structures configuring the vortex dividing member is defined as N, and an outer diameter of each of the structures is defined as D.

10. The laser chamber according to claim **9**,

wherein $0 < L_{c1h} < L_h/(2N)$ is satisfied, where a distance in the second direction between a center of the structure closest to the first point among the plurality of structures and the inner wall is defined as L_{c1h}.

11. The laser chamber according to claim **10**,

wherein $0 < L_{c1w} \leq L_w/(2N)$ is satisfied, where a distance in the third direction between a center of the structure closest to the first point among the plurality of structures and the inner wall is defined as L_{c1w}.

12. The laser chamber according to claim **11**,

wherein $L_{c2h} \leq (L_h - S/2 - L_{c1h})/(N-1)$ is satisfied, where a distance in the second direction between centers of two of the structures adjacent to each other is defined as L_{c2h}.

13. The laser chamber according to claim **12**,

wherein $L_{c2w} \leq (L_w - S/2 - L_{c1w})/(N-1)$ is satisfied, where a distance in the third direction between the centers of two of the structures adjacent to each other is defined as L_{c2w}.

14. The laser chamber according to claim **8**,

wherein each of the structures is a hollow cylinder having a hollow portion.

15. The laser chamber according to claim **1**,

wherein the vortex dividing member is a mesh plate.

16. The laser chamber according to claim **15**,

wherein the vortex dividing member is arranged in a space defined by the inner wall and a straight line connecting a first point and a second point,

where, in a plane perpendicular to the first direction, a point at which the inner wall is in contact with the insulating guide on the downstream side of the second electrode is defined as the first point, and a point at which an inclined surface of the inner wall becomes parallel to the second direction is defined as the second point.

17. The laser chamber according to claim **1**,

wherein the vortex dividing member includes a combination of a mesh plate and a plurality of cylinders each having a circular outer shape in a cross section in a plane perpendicular to the first direction.

18. The laser chamber according to claim **1**,

wherein the vortex dividing member includes a combination of a mesh plate and a plurality of brackets each including two straight portions whose cross sections in a plane perpendicular to the first direction are perpendicular to each other.

19. A gas laser device configured to output laser light and including an optical resonator and a laser chamber arranged to cause an optical path of the optical resonator to pass therethrough,

the laser chamber including:

a container filled with a laser gas;

a first electrode extending in a first direction and arranged in the container;

a second electrode arranged at a position closer to an inner wall of the container than the first electrode while extending in the first direction and facing the first electrode in a second direction orthogonal to the first direction;

a fan configured to cause the laser gas to flow through a discharge space between the first electrode and the second electrode;

an insulating guide arranged on a downstream side of the second electrode; and

a vortex dividing member including a plurality of structures extending in the first direction and arranged discretely along a direction in which the laser gas flows on a downstream side of the insulating guide, and configured to divide a vortex generated by a part of a flow of the laser gas.

20. An electronic device manufacturing method, comprising:

generating laser light using a gas laser device;

outputting the laser light to an exposure apparatus; and

exposing a photosensitive substrate to the laser light in the exposure apparatus to manufacture an electronic device,

the gas laser device being configured to output the laser light and including an optical resonator and a laser chamber arranged to cause an optical path of the optical resonator to pass therethrough, and

the laser chamber including:

a container filled with a laser gas;

a first electrode extending in a first direction and arranged in the container;

a second electrode arranged at a position closer to an inner wall of the container than the first electrode while extending in the first direction and facing the first electrode in a second direction orthogonal to the first direction;

a fan configured to cause the laser gas to flow through a discharge space between the first electrode and the second electrode;

an insulating guide arranged on a downstream side of the second electrode; and

a vortex dividing member including a plurality of structures extending in the first direction and arranged discretely along a direction in which the laser gas flows on a downstream side of the insulating guide, and configured to divide a vortex generated by a part of a flow of the laser gas.

* * * * *