US012403960B2

(12) **United States Patent**
Hayashi et al.

(10) **Patent No.: US 12,403,960 B2**
(45) **Date of Patent: Sep. 2, 2025**

(54) **OUTER PANEL STRUCTURE**

(71) Applicant: **TOYOTA JIDOSHA KABUSHIKI KAISHA**, Aichi-ken (JP)

(72) Inventors: **Takanori Hayashi**, Toyota (JP); **Yosuke Otake**, Ichinomiya (JP)

(73) Assignee: **TOYOTA JIDOSHA KABUSHIKI KAISHA**, Aichi-Ken (JP)

(*) Notice: Subject to any disclaimer, the term of this patent is extended or adjusted under 35 U.S.C. 154(b) by 372 days.

(21) Appl. No.: **18/301,997**

(22) Filed: **Apr. 18, 2023**

(65) **Prior Publication Data**

US 2023/0331313 A1 Oct. 19, 2023

(30) **Foreign Application Priority Data**

Apr. 19, 2022 (JP) 2022-068586

(51) **Int. Cl.**

B60K 15/05	(2006.01)
B60L 53/16	(2019.01)
B62D 25/16	(2006.01)
B62D 25/18	(2006.01)
B62D 25/24	(2006.01)
B62D 27/02	(2006.01)

(52) **U.S. Cl.**

CPC ***B62D 25/18*** (2013.01); ***B60L 53/16*** (2019.02); ***B62D 25/163*** (2013.01); ***B62D 25/24*** (2013.01); *B60K 15/05* (2013.01); *B60K 2015/053* (2013.01); *B60K 2015/0553* (2013.01)

(58) **Field of Classification Search**

CPC .. B60K 5/05; B60K 5/053; B60K 2015/0553; B62D 25/16; B62D 25/161; B62D 25/18; B62D 25/24; B62D 27/203

USPC 296/198, 29, 30

See application file for complete search history.

(56) **References Cited**

U.S. PATENT DOCUMENTS

2017/0334287 A1 11/2017 Stack et al.
2024/0075824 A1* 3/2024 Shibata H01R 13/7172

FOREIGN PATENT DOCUMENTS

JP H08133126 A * 5/1996
JP 5715708 B2 5/2015

OTHER PUBLICATIONS

JP8S133126 Text (Year: 1996).*

* cited by examiner

Primary Examiner — Dennis H Pedder
(74) *Attorney, Agent, or Firm* — HAUPTMAN HAM, LLP

(57) **ABSTRACT**

An outer panel structure includes a front fender panel, which is an outer panel, and a charging receiver module or fuel receiver module. The front fender panel is provided at a side part of a vehicle, and includes a frame part formed therein by having a part thereof perforated in a thickness direction. The charging receiver module or fuel receiver module is inserted and fixed in the frame part. The charging receiver module or fuel receiver module includes a lid that can be opened and closed. The outer panel structure further includes a reinforcement bracket mounted to the front fender panel at a part located below an opening/closing hinge axis of the lid in terms of a vehicle height direction.

2 Claims, 10 Drawing Sheets

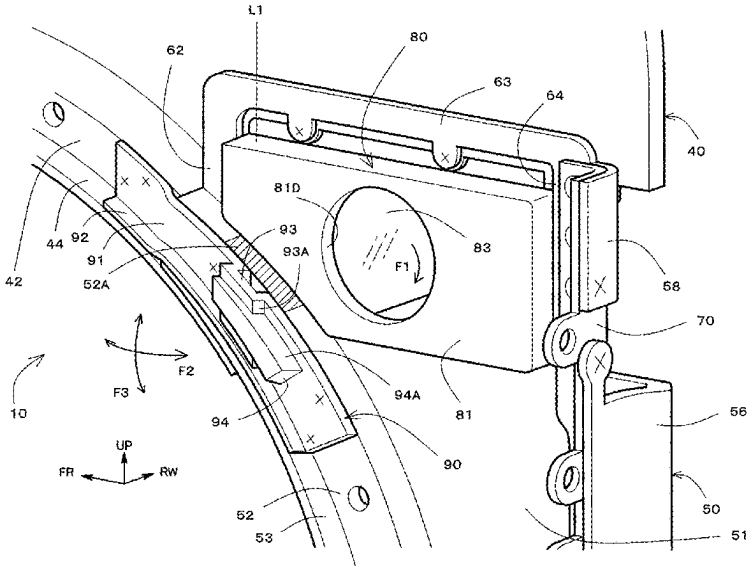

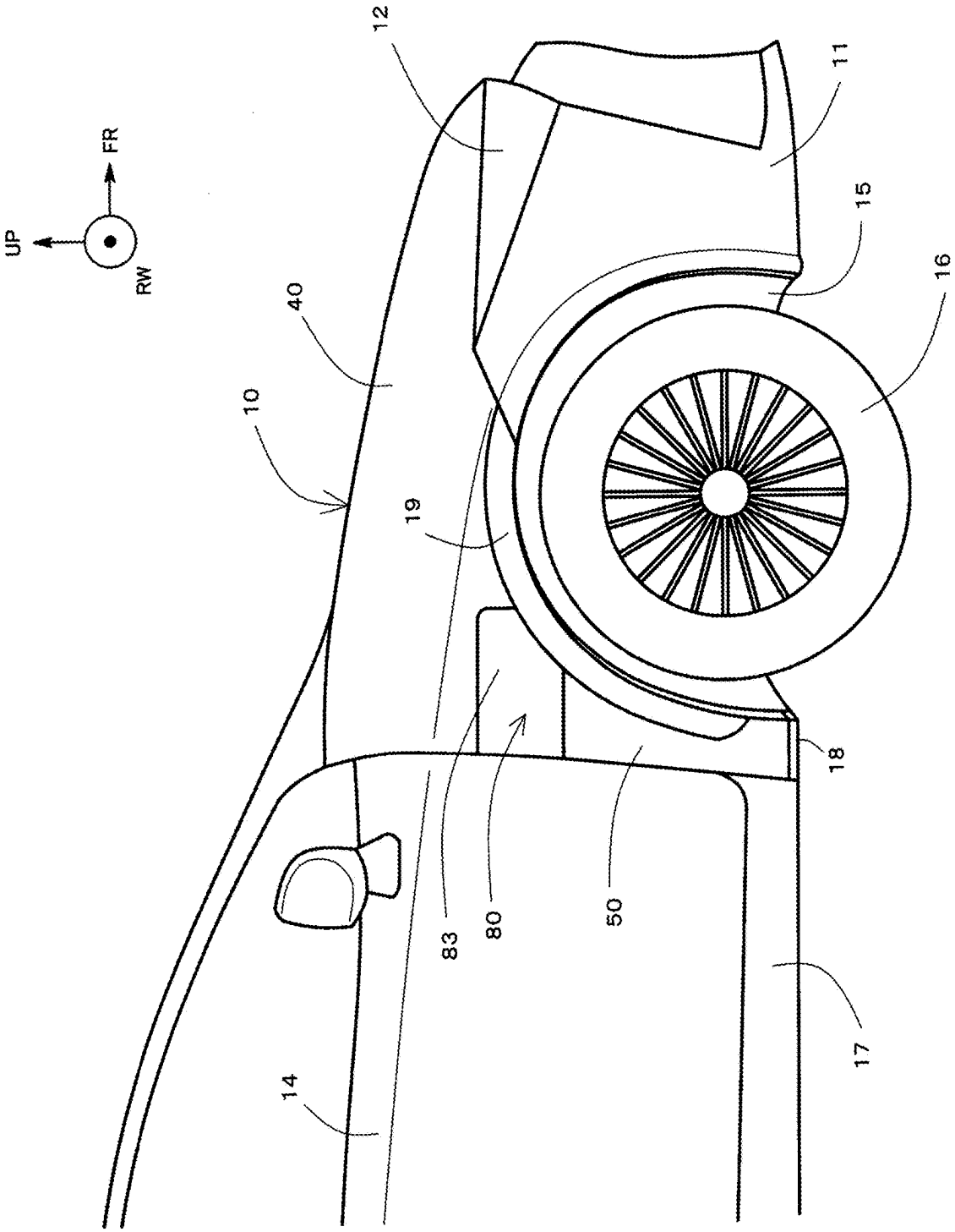

FIG. 1

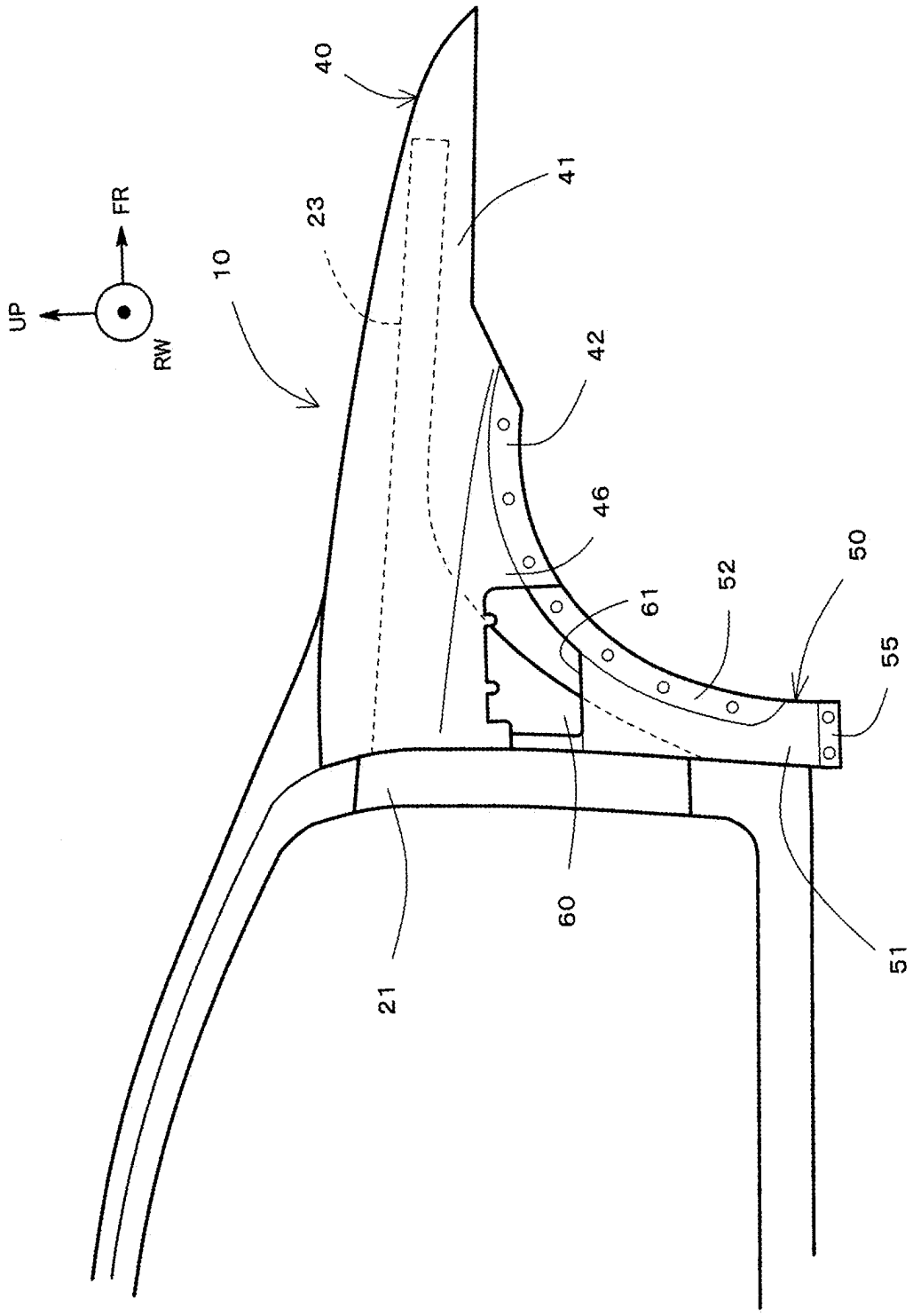

FIG. 2

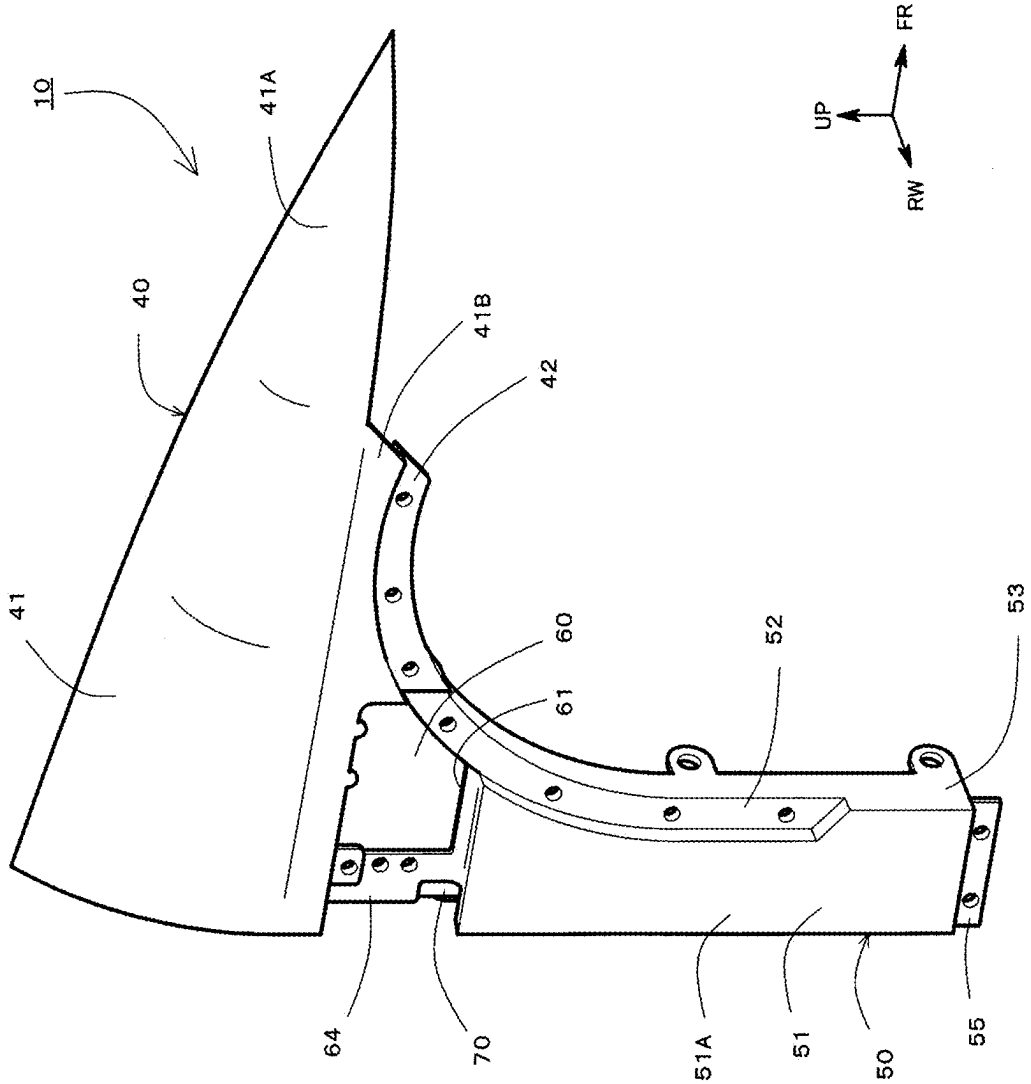

FIG. 3

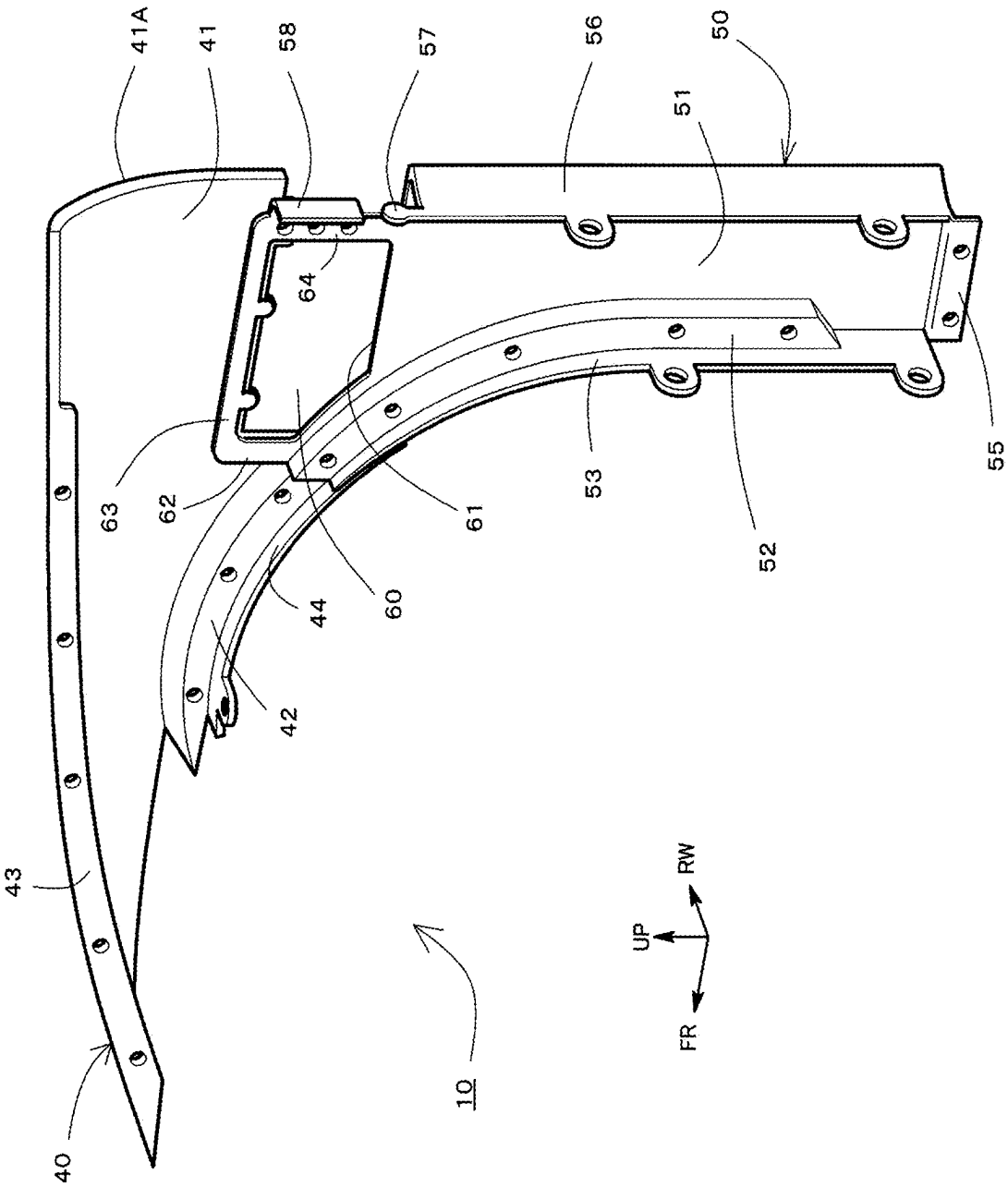

FIG. 4

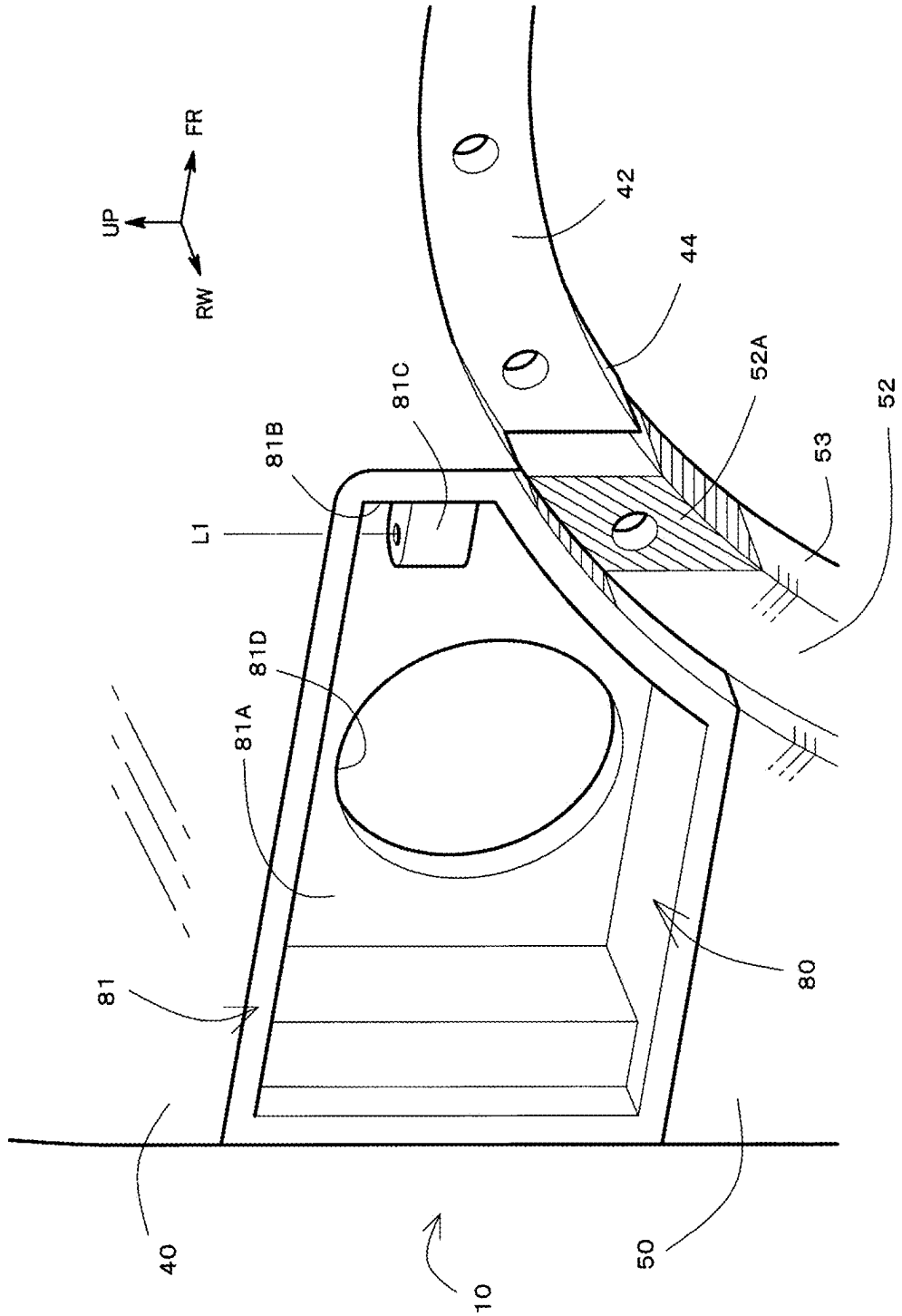

FIG. 5

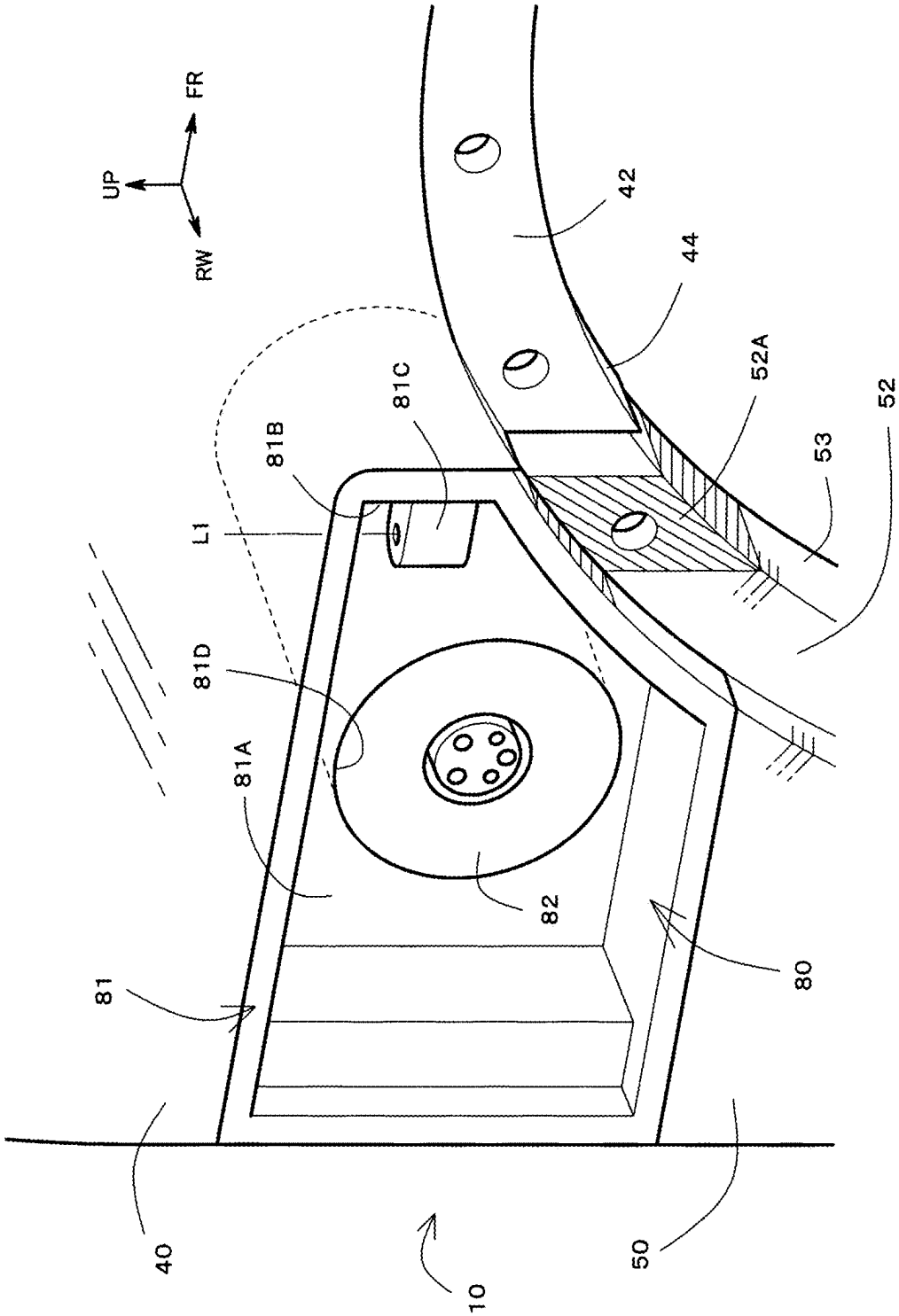

FIG. 6

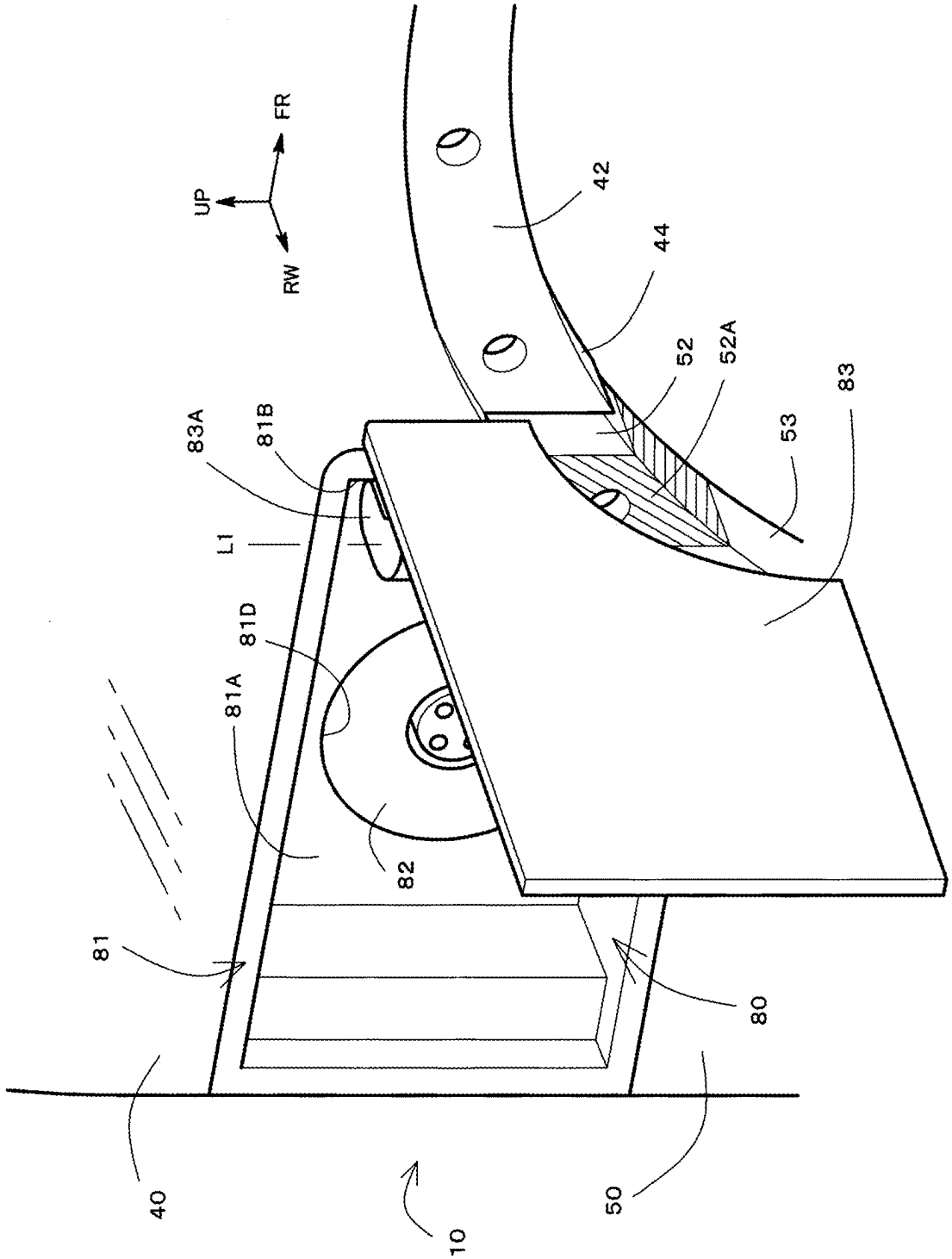

FIG. 7

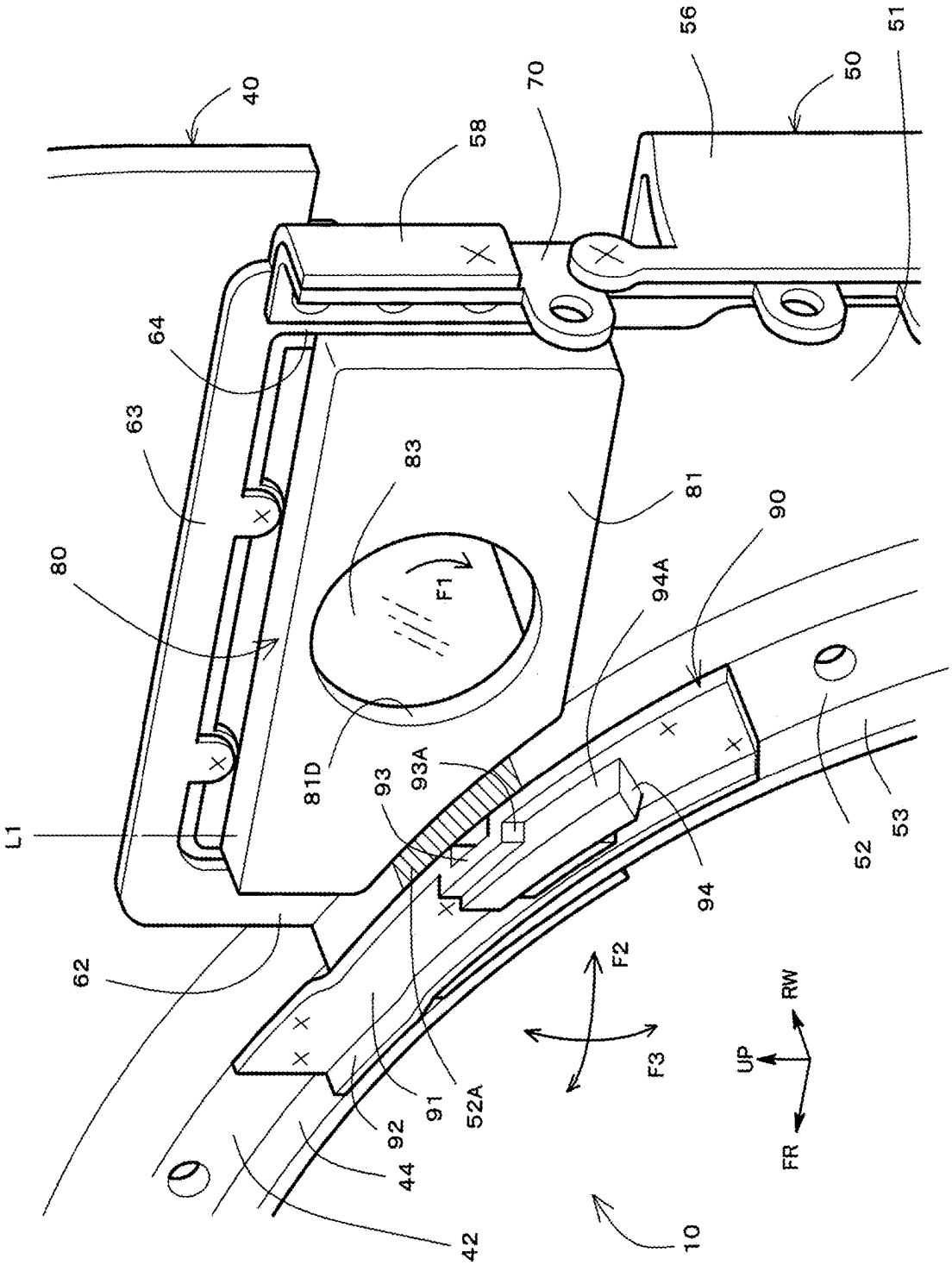
40
58
70
56
50
51
64
63
83
81
80
F1
90
94A
81D
93
93A
L1
94
52
53
62
F2
F3
UP
RW
FR
91
52A
92
44
42
10

FIG. 8

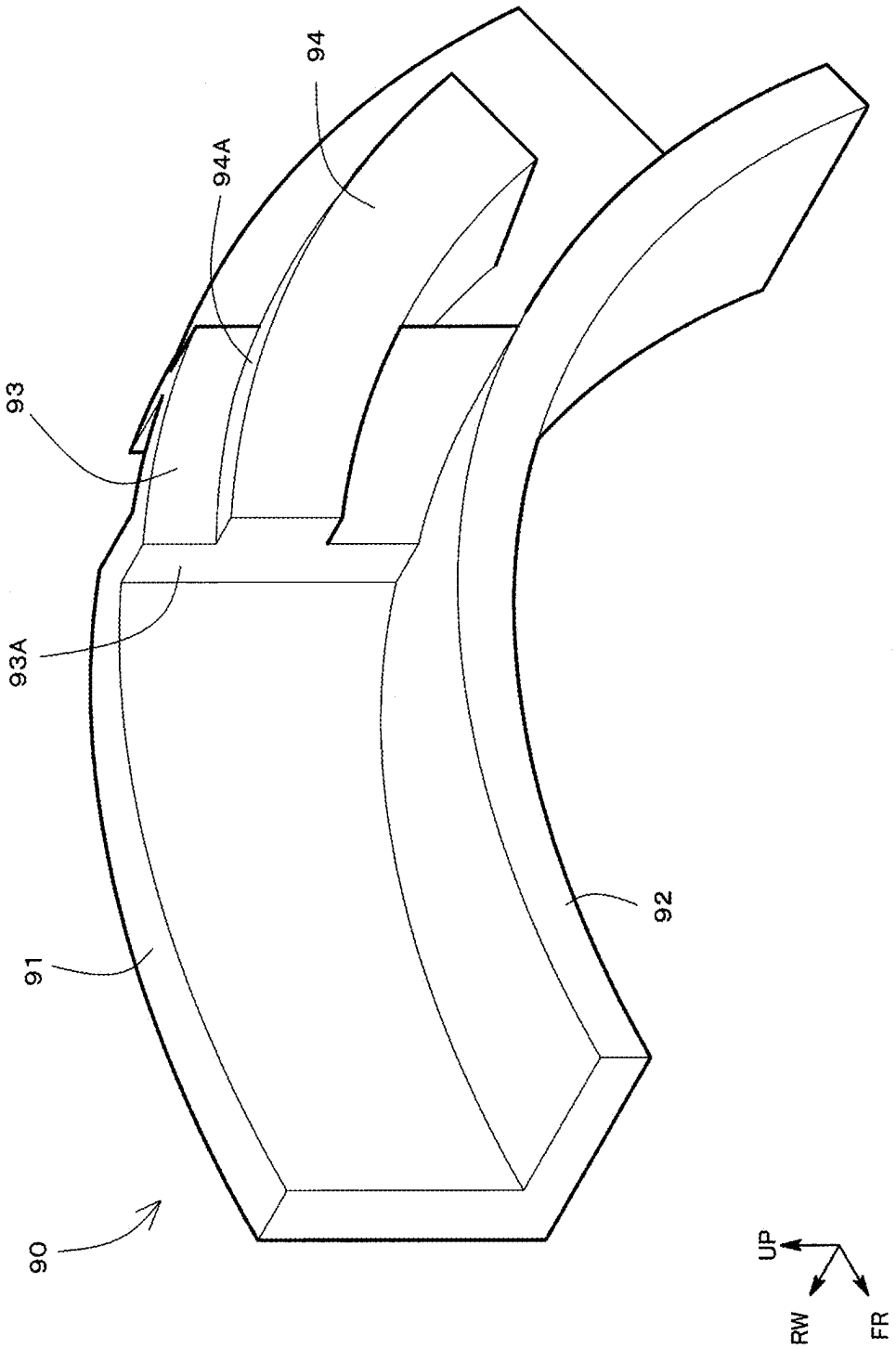

FIG. 9

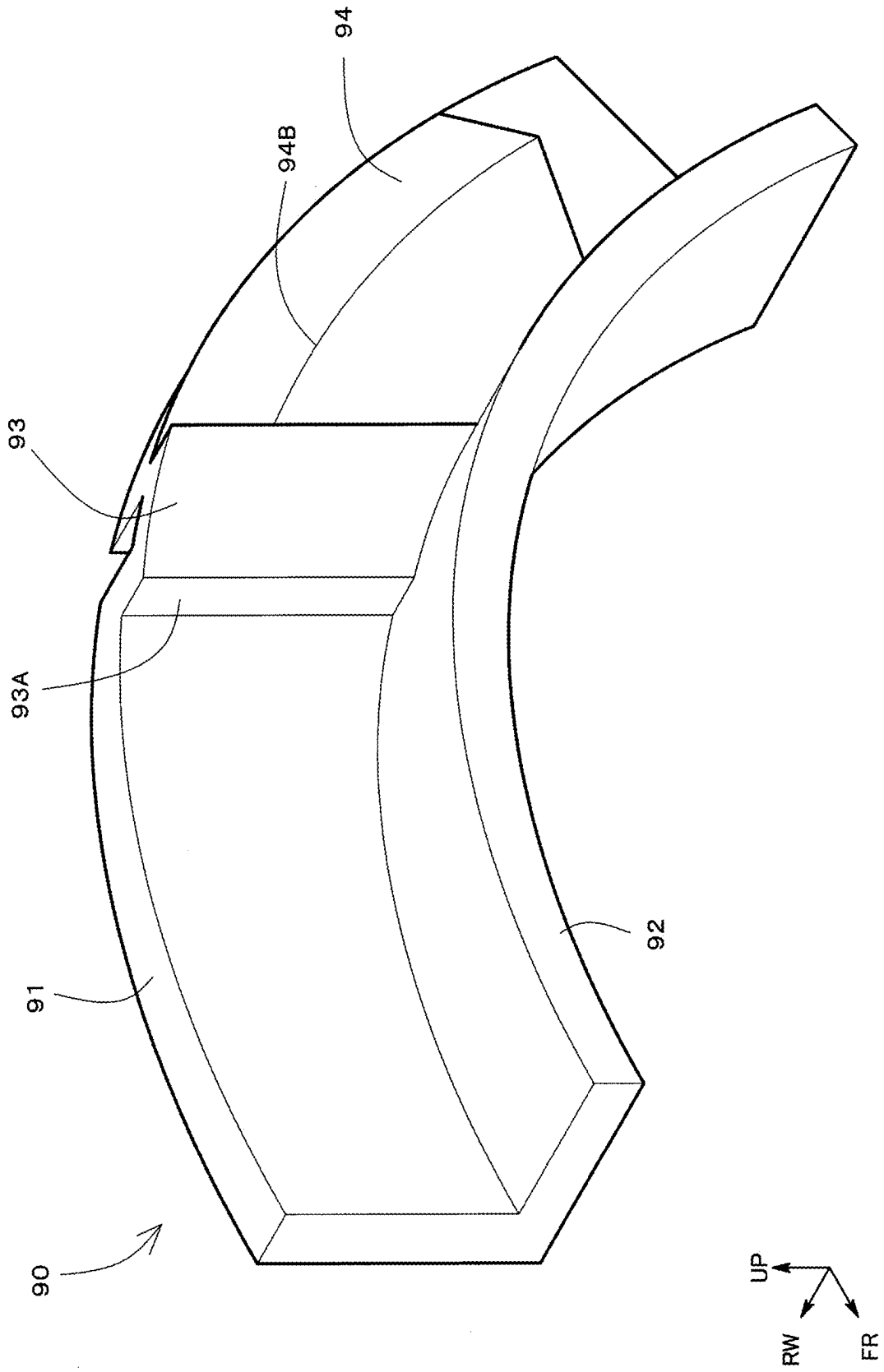

FIG. 10

OUTER PANEL STRUCTURE

CROSS REFERENCE TO RELATED APPLICATION

This application claims priority to Japanese Patent Application No. 2022-068586 filed on Apr. 19, 2022, which is incorporated herein by reference in its entirety including the specification, claims, drawings, and abstract.

TECHNICAL FIELD

The present specification discloses a vehicle outer panel structure.

BACKGROUND

An outer panel of a vehicle is formed to have an opening in a part thereof for installing a charging receiver module or a fuel receiver module. For example, in JP 5715708 B, an opening is provided in a front fender panel of an electric vehicle (BEV), and a charging receiver module is fitted in this opening.

At a time of charging or fueling, a lid, which is a cover member of the charging receiver module or the fuel receiver module, is opened. When a vehicle user or the like leans on the lid in the open state from above in a manner of, for example, using the lid as an armrest, a part of the outer panel located below a rotational axis of the lid may become deformed by being dented inward in a vehicle width direction.

In view of this, the present specification discloses an outer panel structure which can enhance rigidity of the part of the outer panel located below the lid.

SUMMARY

The present specification discloses an outer panel structure. This outer panel structure includes an outer panel, and a charging receiver module or fuel receiver module. The outer panel is provided at a side part of a vehicle, and includes a frame part formed therein by having a part thereof perforated in a thickness direction. The charging receiver module or fuel receiver module is inserted and fixed in the frame part. The charging receiver module or fuel receiver module includes a lid that can be opened and closed. The outer panel structure further includes a reinforcement bracket mounted to the outer panel at a part located below an opening/closing hinge axis of the lid in terms of a vehicle height direction.

When a downward load is applied to the lid in an open state, an inward load in a vehicle width direction is input to the outer panel in a region immediately below the opening/closing hinge axis. According to the above configuration, by mounting the reinforcement bracket in the region where this load is input, deformation in this region is suppressed.

In the above configuration, the bracket may include a support segment placed in contact with the outer panel, and a bead projecting in the vehicle width direction from the support segment. In that case, the bead includes a vertical bead extending in the vehicle height direction and a horizontal bead extending in the vehicle longitudinal direction.

According to the above configuration, by forming the bead on the bracket and thereby increasing rigidity, deformation in this part is suppressed. Further, when a downward load is applied to the lid in an open state, a load that works to cause an inwardly bending deformation (or denting deformation) in the vehicle width direction is input to the outer panel in a part located below the opening/closing hinge axis of the lid in terms of the vehicle height direction. The vertical bead extending in the vehicle height direction and the horizontal bead extending in the vehicle longitudinal direction, and in particular, side plates thereof, resist this bending load, and deformation of the outer panel is thereby suppressed.

In the above configuration, the outer panel may be a fender panel. In that case, the frame part is formed in a position above a tire. Further, the fender panel includes, as a structure located near the tire, a part having an L-shaped cross section, which includes a first plate portion facing the vehicle width direction and a second plate portion bent from the first plate portion. Furthermore, the bracket has an L-shaped cross section conforming along the first plate portion and the second plate portion.

According to the above configuration, since the bracket has an L-shaped cross section, a ridgeline is formed, which is a borderline between plate segments, so that resistance to load is increased as compared to the case where the bracket has a planar shape. Further, since the bracket has a shape conforming along the fender panel, interference with components around the fender panel is reduced.

According to the outer panel structure disclosed in the present specification, rigidity of the part of the outer panel located below the lid can be enhanced.

BRIEF DESCRIPTION OF DRAWINGS

Embodiment(s) of the present disclosure will be described based on the following figures, wherein:

FIG. **1** is a side view showing, by way of example, a vehicle having an outer panel structure according to an embodiment;

FIG. **2** is a side view showing, by way of example, a front fender panel, which is a part of the outer panel structure according to the embodiment, and a skeletal structure of a vehicle surrounding the front fender panel;

FIG. **3** is a perspective view showing the front fender panel by way of example;

FIG. **4** is a perspective view of the front fender panel as seen from a direction opposite that of FIG. **3**;

FIG. **5** is a perspective view illustrating a step (**1** of **3**) for mounting a charging receiver module to the front fender panel;

FIG. **6** is a perspective view illustrating a step (**2** of **3**) for mounting the charging receiver module to the front fender panel;

FIG. **7** is a perspective view illustrating a step (**3** of **3**) for mounting the charging receiver module to the front fender panel;

FIG. **8** is a perspective view of the front fender panel as seen from the same direction as that of FIG. **4**, showing a state in which, in addition to a box and a lid of the charging receiver module, a bracket is mounted to the front fender;

FIG. **9** is a perspective view of the bracket alone; and

FIG. **10** is a perspective view showing another example of the bracket alone.

DESCRIPTION OF EMBODIMENTS

An outer panel structure according to an embodiment will now be described by reference to the drawings. The shapes, materials, numbers of components, and numerical values described below are referred to simply by way of example, and can be changed as appropriate in accordance with

specifications of the outer panel structure. Further, in the following description, identical elements are assigned the same reference signs in all of the drawings.

In FIGS. **1** to **9**, in order to indicate positions and directions of elements, a rectangular coordinate system composed of an FR axis, an RW axis, and an UP axis is used. The FR axis is a vehicle longitudinal direction axis on which the vehicle front direction is the positive direction. The RW axis is a vehicle width direction axis on which the vehicle right direction is the positive direction. The UP axis is a vehicle vertical direction axis on which the vehicle upward direction is the positive direction.

<Overall Configuration>

Referring to FIG. **1**, the outer panel structure according to the present embodiment is composed by including, for example, a front fender panel **10**, a charging receiver module **80** (see FIG. **7**), and a bracket **90** (see FIG. **8**).

The front fender panel **10** is an outer panel member provided at a front side part of a vehicle, and is installed to cover a part above a front tire **16**. The front fender panel **10** is located in front of a front door **14** and a rocker panel molding **17**, and behind a headlamp **12** and a front bumper **11**.

Referring to FIG. **2**, the front fender panel **10** is fastened to and supported on a skeletal member of the vehicle. For example, an inward portion, in the vehicle width direction, of the front fender panel **10** is fastened to an apron upper member **23**. A front end portion of the apron upper member **23** is connected to a radiator support (not shown in drawing). Further, a rear end portion of the front fender panel **10** is fastened to a front pillar lower part **21**.

As will be described later, the front fender panel **10** is divided into two parts, namely, upper and lower parts. That is, the front fender panel **10** comprises a fender panel upper part **40** as an upper part of the divided member. Further, the front fender panel **10** comprises a fender panel lower part **50** as a lower part of the divided member. The detailed structure of these parts will be described later.

Referring to FIG. **1**, the charging receiver module **80** is provided in the front fender panel **10**. As shown in FIG. **7** described later, the charging receiver module **80** comprises a charging inlet **82**, a box **81** that houses the charging inlet **82**, and a lid **83** that can be opened and closed with respect to the box **81**. The detailed structure of the charging receiver module **80** will be described later.

Referring to FIG. **2**, a part of the front fender panel **10** is perforated in its thickness direction, and a frame part **61** is thereby formed. This frame part **61** provides a box opening **60** in which the charging receiver module **80** is inserted and fixed. For example, when viewed from a side face, the front fender panel **10** has a substantially triangular shape having a vertical size that increases from the front toward the rear. In consideration of such a structure, the frame part **61** is provided in, for example, a rear portion of the front fender panel **10** where the size allows relatively more room.

Referring to FIGS. **1** and **2**, the frame part **61** is formed in a position above the front tire **16**. For example, the frame part **61** has a shape in which a lower front part is cut off in an arcuate shape along an arcuate shape of the front fender panel **10**.

Referring to FIG. **7**, an opening/closing hinge axis L**1** of the charging receiver module **80** is provided at a front part of the box **81**. Further, on the front fender panel **10** at a part located below the opening/closing hinge axis L**1** in terms of a vehicle height direction, flanges **42**, **52** and flanges **44**, **53** extending in an arcuate shape are provided.

With the flanges **42**, **52** and the flanges **44**, **53**, a part having an L-shaped cross section is formed on the front fender panel **10**. For example, faces of the flanges **42**, **52** are oriented in the vehicle width direction, whereas the flanges **44**, **53** face a tread surface of the front tire **16**.

Regarding the structure of the front fender panel **10** in the vicinity of the front tire **16**, when the flanges **42**, **52** are assumed to be a first plate portion facing in the vehicle width direction, the flanges **44**, **53** are recognized as a second plate portion bent from the first plate portion. In conformity with the L-shaped cross section formed by the first plate portion and the second plate portion, the reinforcement bracket **90** (see FIG. **8**) is similarly formed to have an L-shaped cross section. With the bracket **90** reinforcing the part of the front fender panel **10** located below the opening/closing hinge axis L**1** in terms of the vehicle height direction, when a downward load is applied to the lid **83**, inwardly bending deformation (or denting deformation) in the vehicle width direction in that part is suppressed. Here, the bracket **90** may have a H-shaped cross section instead of the L-shaped cross section.

<Fender Panel Upper Part>

FIGS. **3** and **4** show, by way of example, perspective views of the front fender panel alone, which is one part of the outer panel structure according to the present embodiment. As a vehicle outer panel, the front fender panel **10** comprises the fender panel upper part **40**, which is the upper part of a divided member, and the fender panel lower part **50**, which is the lower part of the divided member.

The fender panel upper part **40** is composed of, for example, a resin, a sheet metal such as an aluminum panel, or the like. The fender panel upper part **40** comprises a main body portion **41** and flanges **42**, **43**, **44**. The main body portion **41** includes a curved design surface **41**A, and a substantially planar design surface **41**B constituting a part of a side face of the vehicle.

Referring to FIG. **4**, the flange **43** is provided at an upper end of the design surface **41**A. The flange **43** is shaped so as to face inward in the vehicle width direction. The flange **43** is perforated in its thickness direction with a plurality of fastening holes. These fastening holes are aligned with fastening holes (not shown in drawing) in the apron upper member **23** (see FIG. **2**), and fastening members such as clips are inserted into these holes, whereby the fender panel upper part **40** is fastened to the apron upper member **23**.

Referring to FIGS. **3** and **4**, the flange **42** is provided at a lower end of the design surface **41**B, and has an arcuate shape along the shape of the front tire **16** (see FIG. **1**). The flange **42** faces the vehicle width direction. The fender panel upper part **40** is shaped such that the flange **42** is recessed inward in the vehicle width direction from the design surface **41**B.

The flange **42** is perforated in its thickness direction with a plurality of fastening holes. Into these fastening holes, clips (not shown in drawing) of a front fender molding **19** (see FIG. **1**) are inserted. Further, referring to FIG. **4**, rear end portions of the flanges **42**, **44** are overlapped on an upper end portion of flanges **52**, **53** of the fender panel lower part **50**.

The flange **44** is bent from the flange **42**, and is provided to extend in an arcuate shape along the shape of the front tire **16** (see FIG. **1**), as with the flange **42**. The flange **44** faces the tread surface of the front tire **16**, and is perforated in its thickness direction with a plurality of fastening holes. Into these fastening holes, clips (not shown in drawing) of a front fender liner **15** (see FIG. **1**) are inserted.

As described above, a cross-sectional L-shape is formed by the flanges **42**, **44**. A front end portion of the reinforcement bracket **90** (see FIG. **8**) is placed in contact with and along this shape.

Referring to FIGS. **3** and **4**, a rear lower-end portion of the main body part **41** is overlapped on an upper portion of the frame part **61** of the box opening **60**. More specifically, referring to FIG. **4**, a front crosspiece **62** and an upper crosspiece **63**, which constitute part of the frame structure of the frame part **61**, are overlapped with the lower end portion of the main body part **41**. These overlapped parts are joined together by welding or the like. The front crosspiece **62** and the upper crosspiece **63** are thereby reinforced.

<Fender Panel Lower Part>

Referring to FIGS. **3** and **4**, the fender panel lower part **50** comprises a main body portion **51** and flanges **52**, **53**, **55**, **56**. The main body portion **51** includes a design surface **51**A. The fender panel upper part **40** and the fender panel lower part **50** are assembled to a vehicle body such that the design surface **51**A and the design surface **41**B of the fender panel upper part **40** are arranged in the same plane.

The flange **55** is connected to a lower end of the main body portion **51**. The fender panel lower part **50** is shaped such that the flange **55** is recessed inward in the vehicle width direction from the main body portion **51**. The flange **55** is perforated in its thickness direction with fastening holes. Into the fastening holes, clips (not shown in drawing) of a mudguard **18** (see FIG. **1**) are inserted.

Referring to FIGS. **3** and **4**, the flange **52** is connected to a front end of the design surface **51**A, and has an arcuate shape along the shape of the front tire **16** (see FIG. **1**). The flange **52** faces the vehicle width direction. Further, the fender panel lower part **50** is shaped such that the flange **52** is recessed inward in the vehicle width direction from the design surface **51**A.

The flange **52** is perforated in its thickness direction with a plurality of fastening holes. As in the flange **42**, clips (not shown in drawing) of the front fender molding **19** (see FIG. **1**) are inserted into these fastening holes.

The flange **53** is bent from the flange **52**, and is provided to extend in an arcuate shape along the shape of the front tire **16** (see FIG. **1**), as with the flange **52**. The flange **53** faces the tread surface of the front tire **16**, and is perforated in its thickness direction with a plurality of fastening holes. Into these fastening holes, clips (not shown in drawing) of the front fender liner **15** (see FIG. **1**) are inserted.

As described above, a cross-sectional L-shape is formed by the flanges **52**, **53**. The reinforcement bracket **90** (see FIG. **8**) is placed in contact with and along this shape.

The fender panel lower part **50** is perforated in a part of an upper end portion thereof and thereby includes the frame part **61** formed therein. For example, as illustrated in FIG. **4**, an upper part of the main body portion **51** is perforated, and the box opening **60** is thereby formed. The frame part **61** of the box opening **60** is substantially rectangular. A front lower-end portion of the frame part **61** is in close proximity to the flanges **42**, **52**, and has an arcuate shape along these flanges.

The box opening **60** is formed at end edges of the fender panel lower part **50**, and comprises the front crosspiece **62**, the upper crosspiece **63**, and a rear crosspiece **64**, all of which have a narrow width. As described above, the front crosspiece **62** and the upper crosspiece **63** are reinforced by being overlapped and welded together with the lower end portion of the fender panel upper part **40**.

The rear crosspiece **64** comprises a flange **58** as shown by way of example in FIG. **8**. Further, a flange **56** is provided at a rear end of the main body portion **51**. To the rear crosspiece **64**, a bracket **70** is welded, for example (or may be fastened). Further, by means of welding points shown by X marks in the drawing, the flanges **56**, **58** are joined together via the bracket **70**. In this way, the rear crosspiece **64** is reinforced by the bracket **70**.

<Charging Receiver Module>

Referring to FIGS. **3** and **7**, the charging receiver module **80** is inserted and fixed in the frame part **61** of the front fender panel **10**, which is the outer panel. In short, the charging receiver module **80** is an assembly having a charging inlet function for receiving external charging, and is, for example, capable of being attached to and detached from the front fender panel **10** using tools or the like.

The charging receiver module **80** comprises the box **81**, the charging inlet **82**, and the lid **83**. The box **81** is fitted in the box opening **60** of the frame part **61**. For example, the box **81** is fastened to the frame part **61** using fastener such as clip or bolt/nut fastening.

The box **81** has a shape conforming to the frame part, and opens in the vehicle width direction. The box **81** comprises a bottom plate **81**A, which is recessed inward in the vehicle width direction from the fender panel upper part **40** and the fender panel lower part **50**, and side plates that surround the bottom plate **81**A. Referring to FIG. **5**, among the side plates, on a side plate **81**B located in the vehicle front direction, a fixed hinge part **81**C is provided. For example, the fixed hinge part **81**C is vertically perforated with a pin opening.

Further, the bottom plate **81**A of the box **81** is perforated in its thickness direction with an inlet opening **81**D. Referring to FIG. **6**, the charging inlet **82** is inserted and fixed in the inlet opening **81**D.

Referring to FIGS. **6** and **7**, the lid **83** is a cover member that covers the opening of the box **81**. The lid **83** comprises a movable hinge part **83**A, which is aligned with the fixed hinge part **81**C. By assembling the movable hinge part **83**A to the fixed hinge part **81**C, the opening/closing hinge axis L**1** is provided in the charging receiver module **80** at its part located in the vehicle front direction. The lid **83** is capable of performing opening and closing movements about the opening/closing hinge axis L**1**.

FIG. **8** shows, by way of example, a perspective view of the front fender panel **10** as seen from a direction opposite that of FIG. **7** (i.e., from a back surface). In FIG. **8**, illustration of the charging inlet **82** is omitted for the purpose of achieving visibility of the lid **83** from the back surface of the front fender panel **10**.

The lid **83** is pivotable about the opening/closing hinge axis L**1**, and with this arrangement, the box **81** is opened and closed. While the lid **83** is in an open state, when a vehicle user or the like leans on the lid **83** from above in a manner of, for example, using the lid as an armrest, a downward load F**1**, which works to tilt the opening/closing hinge axis L**1** outward in the vehicle width direction, is input to the lid **83**.

At that time, in accordance with the tilting of the opening/closing hinge axis L**1**, a load which works to cause inward denting in the vehicle width direction is input to a part of the fender panel lower part **50** located below the opening/closing hinge axis L**1** in terms of the vehicle height direction, which is, for example, a part **52**A below the axis in FIG. **5**. When such a load is input and an inwardly denting deformation (or bending deformation) in the vehicle width direction occurs in the part **52**A below the axis, there is a risk that, for example, fastening with the front fender molding **19** (see FIG. **1**) may become disengaged.

In view of this, in the outer panel structure according to the present embodiment, a reinforcement bracket (see FIG. **8**) is mounted to the part **52**A below the axis. For example, the bracket **90** is mounted to (or provided as a backing on) a back surface (or hidden surface) of the front fender panel **10** located behind the design surface. Denting deformation in the part **52**A below the axis is thereby suppressed.

<Bracket>

FIG. **9** shows a perspective view of the bracket **90** alone by way of example. The bracket **90** is a member having an L-shaped cross section, and comprises a support segment **91** and a support segment **92** that is bent substantially perpendicularly from the support segment **91**. By configuring the bracket to have an L-shaped cross section, a ridgeline is formed, which is a borderline between the support segments **91**, **92**, so that resistance to load is increased as compared to the case where the bracket **90** has a planar shape.

The bracket **90** is shaped to have an arcuate shape along the shape of the flanges **42**, **44** of the fender panel upper part **40** (see FIG. **8**) and the flanges **52**, **53** of the fender panel lower part **50**. Further, the bracket **90** is shaped such that the bending angle between the support segments **91**, **92** is equal to the bending angle between the flanges **42**, **52** and the flanges **44**, **53**.

The support segments **91**, **92** of the bracket **90** are arranged to extend across a rear end portion of the flanges **42**, **44** and a front end portion of the flanges **52**, **53**, and placed in contact with these flanges. For example, by means of welding points shown by X marks in the drawing, the support segments **91**, **92** are welded to the flanges **42**, **44**, **52**, **53**.

Since the bracket **90** is shaped to conform along the cross-sectional L-shape formed by the flanges **42**, **52** (i.e., the first plate portion) facing in the vehicle width direction and the flanges **44**, **53** (i.e., the second plate portion) bent from the flanges **42**, **52**, interference with components around the flanges **42**, **44**, **52**, **53** is reduced.

Further, for example, the support segment **91** is set to have a width that does not exceed a width of the flanges **42**, **52**, and the support segment **92** is set to have a width that does not exceed a width of the flanges **44**, **53**. By configuring the bracket **90** to have a size that fits within the flanges **42**, **44**, **52**, **53**, interference with components around the flanges **42**, **44**, **52**, **53** is reduced.

Referring to FIG. **9**, for example, the support segment **91** comprises a vertical bead **93** and a horizontal bead **94**, which project inwardly in the vehicle width direction from the support segment **91**. For example, the bracket **90** is shaped such that both of the vertical bead **93** and the horizontal bead **94** have a shape of a rectangular groove having a H-shaped cross section. The vertical bead **93** and the horizontal bead **94**, together with the flanges **42**, **52**, form a closed cross-section structure. With this, resistance to inward bending load in the vehicle width direction, as described below, is increased (as compared to the case where the closed cross-section structure is not provided).

Further, for example, the bracket **90** is shaped such that parts of the horizontal bead **94** and the vertical bead **93** intersect and overlap each other. For example, a T-shaped bead structure is obtained by configuring one lengthwise end of the horizontal bead **94** to coincide with a side plate **93**A of the vertical bead **93**.

Further, in order to obtain ridgelines in this intersecting structure, the beads are shaped such that, for example, the size of projection (i.e., the groove depth) of the horizontal bead **94** is greater than that of the vertical bead **93**.

For example, the vertical bead **93** and the horizontal bead **94** are positioned to overlap the fastening holes provided in the flanges **42**, **52**. With this arrangement, since the clips inserted in the fastening holes are inserted into the grooves of the vertical bead **93** and the horizontal bead **94**, fastening work can be performed without interference by the bracket **90**.

Referring to FIGS. **5** and **8**, for example, the vertical bead **93** is positioned at the part **52**A of the flange **52** below the axis. In other words, the vertical bead **93** is positioned at an intersection point between the flange **52** and the opening/closing hinge axis L**1**.

Referring to FIG. **8**, when the downward load F**1** is input to the lid **83**, inwardly bending load in the vehicle width direction, such as those shown for example as load F**2** and load F**3**, is input to the part **52**A below the axis. Here, for example, a side plate **94**A of the horizontal bead **94** struts against the load F**2** which works to cause bending deformation in the vehicle longitudinal direction, and thereby suppresses deformation of the part **52**A below the axis. Further, the side plate **93**A of the vertical bead **93** struts against the load F**3** which works to cause bending in the vehicle vertical direction, and thereby suppresses deformation of the part **52**A below the axis.

Other Embodiments

FIG. **10** shows another example of the bracket **90** according to the present embodiment. In this example, as shown by a ridgeline **94**B, a horizontal bead **94** having a cross section of a gable roof shape projects inwardly in the vehicle width direction. For example, in this example also, the horizontal bead **94** struts against the load F**2** which works to cause bending deformation in the vehicle longitudinal direction, and thereby suppresses deformation of the part **52**A below the axis.

Although the front fender panel **10** is referred to as the panel member of the outer panel structure in the above-described embodiment by way of example, the outer panel structure according to the present disclosure is not limited to this embodiment. For example, the outer panel structure may comprise a rear fender panel (which is also referred to as a quarter panel) instead of the front fender panel. In that case, a frame part for a charging receiver module **80** is similarly formed in the rear fender panel, and a bracket **90** is mounted to a part located below an opening/closing hinge axis L**1** of the charging receiver module **80** in terms of the vehicle height direction.

Although in the above-described embodiment the charging receiver module **80** is referred to as a part of the outer panel structure by way of example, the outer panel structure according to the present disclosure is not limited to this embodiment. For example, the outer panel structure may comprise a fuel receiver module instead of the charging receiver module. For example, the fuel receiver module comprises a fuel inlet instead of the charging inlet **82**. In that case, a bracket **90** is similarly mounted to a part located below an opening/closing hinge axis L**1** of the fuel receiver module in terms of the vehicle height direction.

The present disclosure is not limited to the present embodiments described above, and includes all changes and modifications without departing from the technical scope or the essence of the present disclosure defined by the claims.

The invention claimed is:

1. An outer panel structure, comprising:

an outer panel, which is provided at a side part of a vehicle, and in which a frame part is formed by perforating a part thereof in a thickness direction; and

a charging receiver module or fuel receiver module inserted and fixed in the frame part, wherein

the charging receiver module or fuel receiver module comprises a lid that can be opened and closed,

the outer panel structure further comprises a reinforcement bracket mounted to the outer panel at a part located below an opening/closing hinge axis of the lid in terms of a vehicle height direction,

the outer panel is a fender panel,

the frame part is formed in a position above a tire,

the fender panel comprises, as a structure located near the tire, a part having an L-shaped cross section, which includes a first plate portion facing a vehicle width direction and a second plate portion bent from the first plate portion, and

the reinforcement bracket has an L-shaped cross section conforming along the first plate portion and the second plate portion.

2. The outer panel structure according to claim **1**, wherein

the reinforcement bracket comprises a support segment placed in contact with the outer panel, and a bead projecting in a vehicle width direction from the support segment, and

the bead comprises a vertical bead extending in the vehicle height direction and a horizontal bead extending in a vehicle longitudinal direction.

* * * * *