US 20250279277A1

(19) United States
(12) Patent Application Publication
SANO
(10) Pub. No.: US 2025/0279277 A1
(43) Pub. Date: Sep. 4, 2025

(54) **HEAT TREATMENT DEVICE AND TREATMENT METHOD**

(71) Applicant: **Tokyo Electron Limited**, Tokyo (JP)

(72) Inventor: **Yohei SANO**, Kumamoto (JP)

(21) Appl. No.: **19/213,070**

(22) Filed: **May 20, 2025**

Related U.S. Application Data

(63) Continuation of application No. 18/626,475, filed on Apr. 4, 2024, now Pat. No. 12,341,008, which is a continuation of application No. 17/948,707, filed on Sep. 20, 2022, now Pat. No. 11,978,630, which is a continuation of application No. 16/934,097, filed on Jul. 21, 2020, now Pat. No. 11,469,105.

(30) **Foreign Application Priority Data**

Jul. 22, 2019 (JP) 2019-134446
Dec. 12, 2019 (JP) 2019-224598

Publication Classification

(51) **Int. Cl.**

H01L 21/027	(2006.01)
G03F 7/09	(2006.01)
G03F 7/20	(2006.01)
H01L 21/02	(2006.01)
H01L 21/324	(2006.01)
H05B 3/26	(2006.01)

(52) **U.S. Cl.**

CPC ***H01L 21/0274*** (2013.01); ***G03F 7/09*** (2013.01); ***G03F 7/20*** (2013.01); ***H01L 21/02104*** (2013.01); ***H01L 21/324*** (2013.01); ***H05B 3/262*** (2013.01); *H05B 2203/022* (2013.01)

(57) **ABSTRACT**

A heat treatment apparatus includes: a heating plate that supports and heat a substrate on which a metal containing resist film is formed; a chamber that covers a processing space above the heating plate; a gas supply that supplies a gas into the chamber along a gas flow path connected to an inside of the chamber, the gas flow path being directed toward the substrate; and an exhaust port that evacuates inside of the chamber.

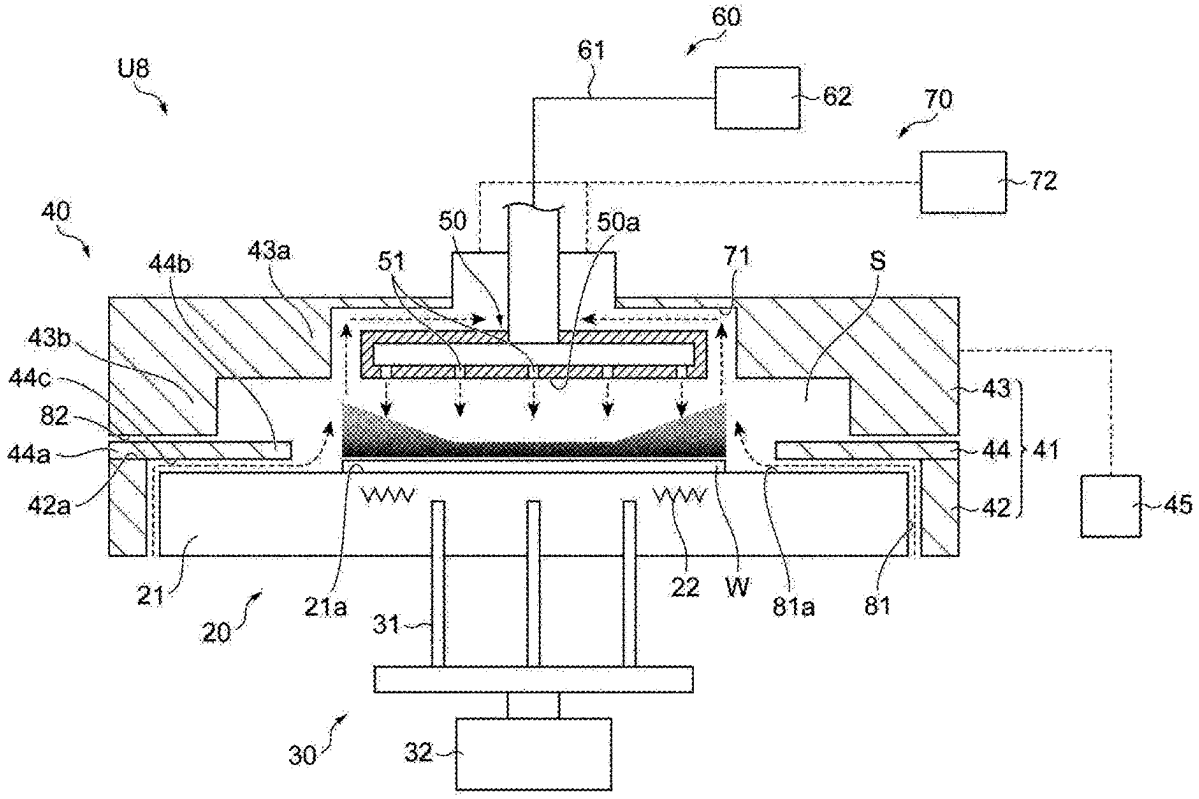

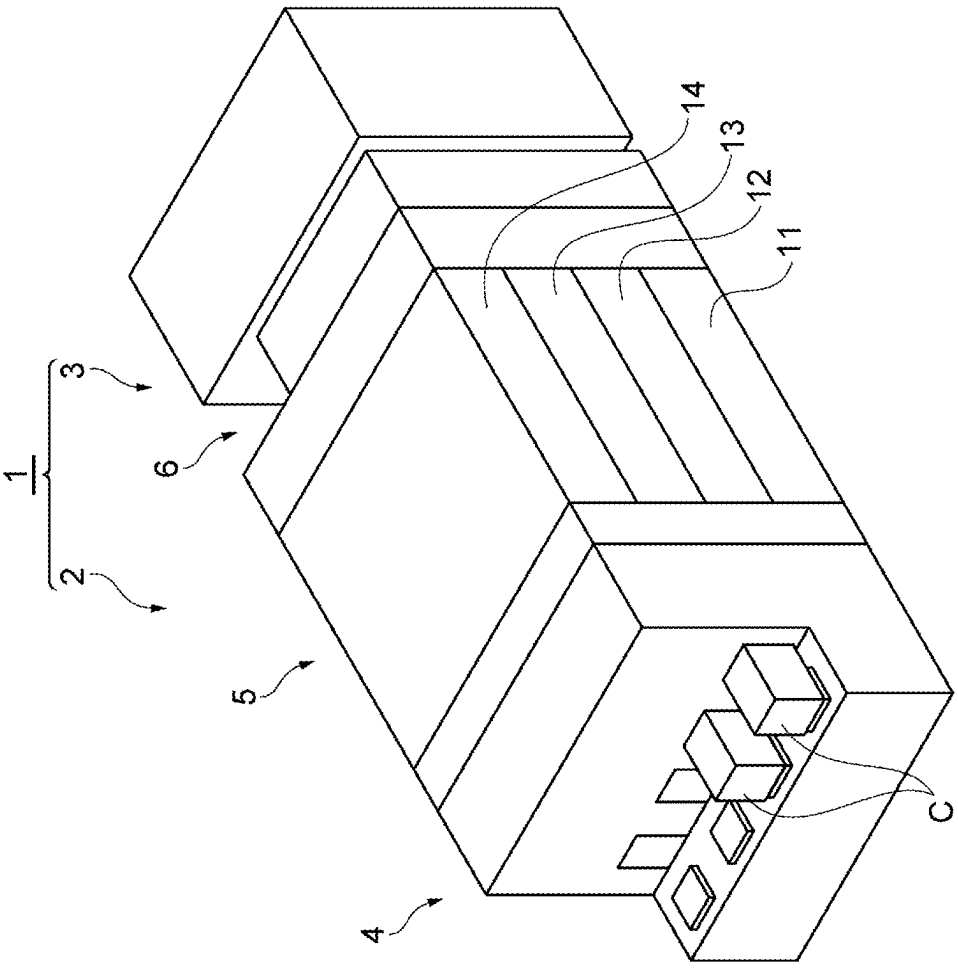

FIG. 1

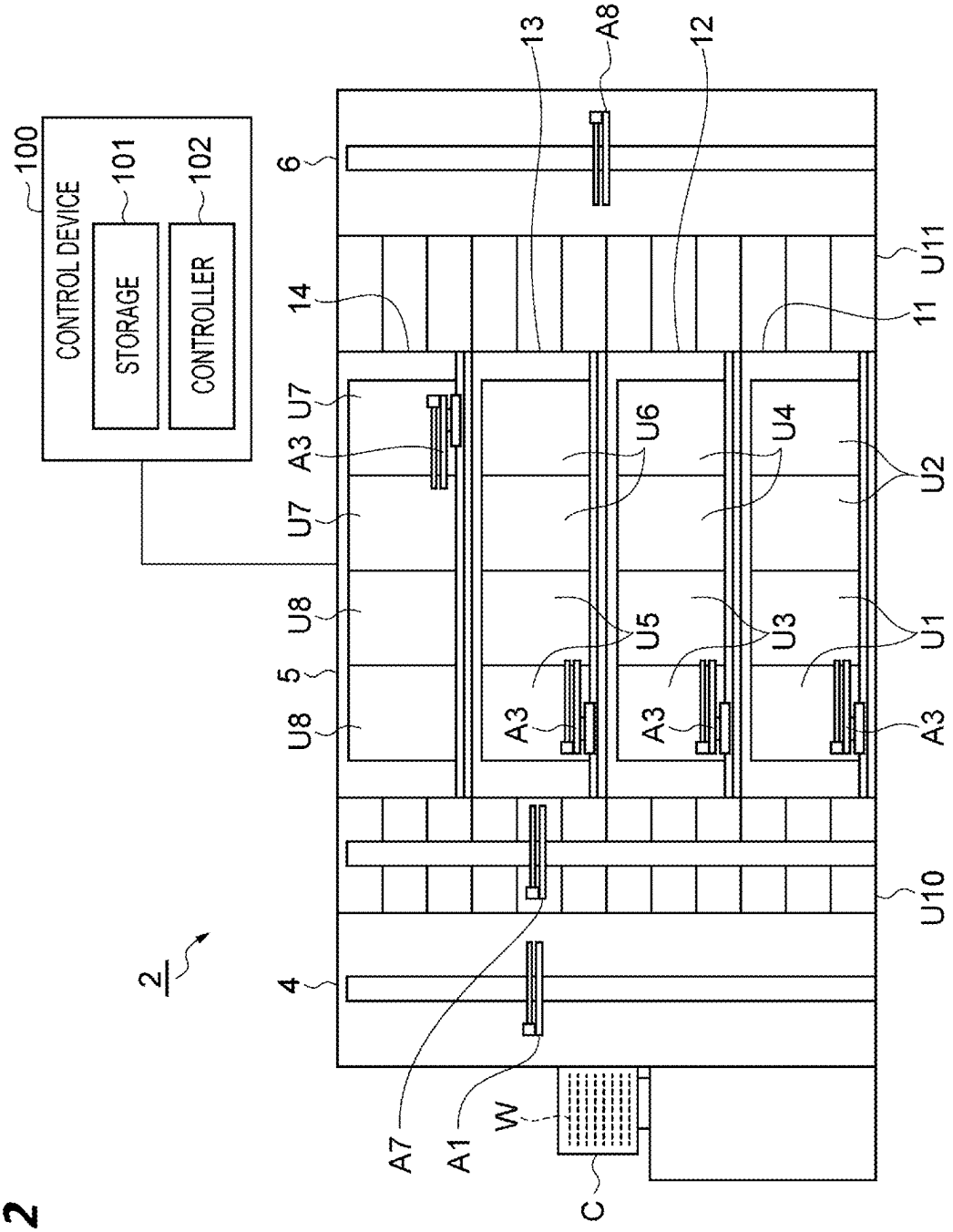
100
CONTROL DEVICE
101
STORAGE
102
CONTROLLER
2
4
5
6
11
12
13
14
A1
A3
A7
A8
U1
U2
U3
U4
U5
U6
U7
U8
U10
U11
W
C

FIG. 2

FIG. 3

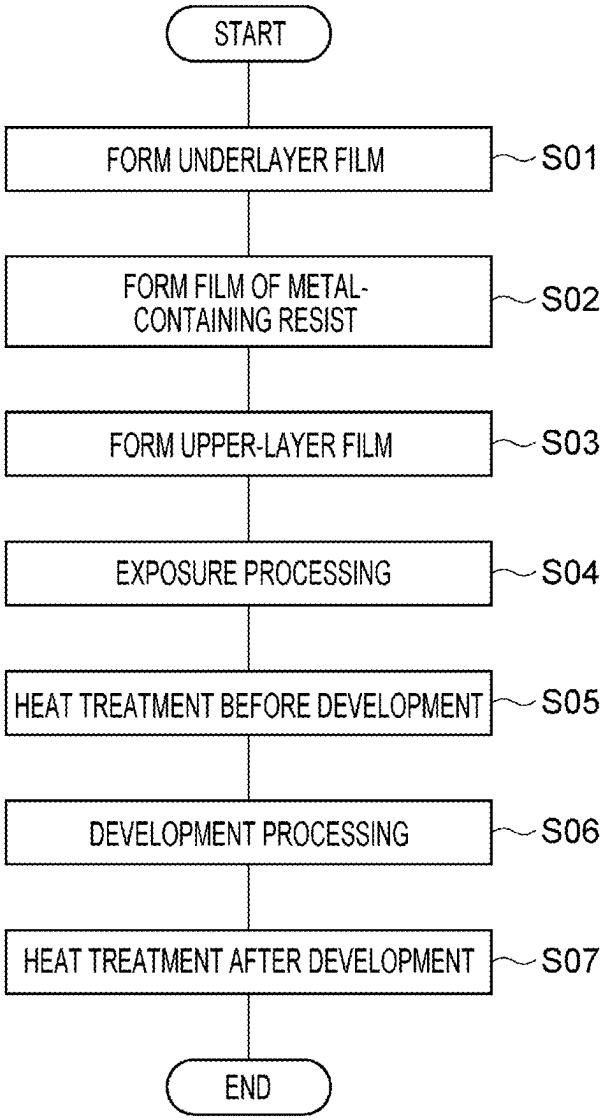
START
FORM UNDERLAYER FILM
S01
FORM FILM OF METAL-CONTAINING RESIST
S02
FORM UPPER-LAYER FILM
S03
EXPOSURE PROCESSING
S04
HEAT TREATMENT BEFORE DEVELOPMENT
S05
DEVELOPMENT PROCESSING
S06
HEAT TREATMENT AFTER DEVELOPMENT
S07
END

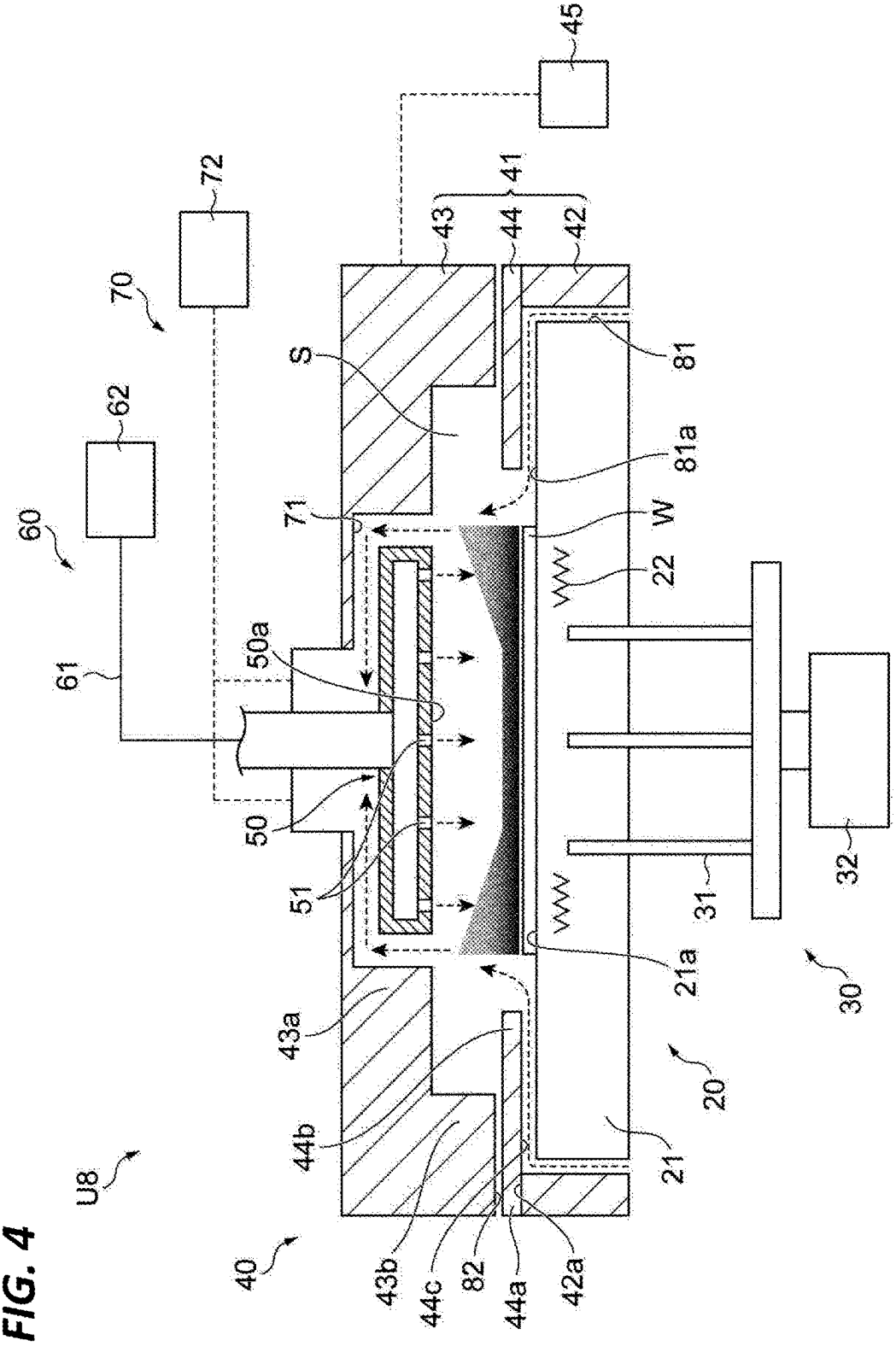
45
72
70
62
60
61
41
43
44
42
S
81
81a
71
W
22
50a
50
51
31
32
21a
30
43a
20
44b
21
U8
40
43b
44c
82
44a
42a

FIG. 4

FIG. 5

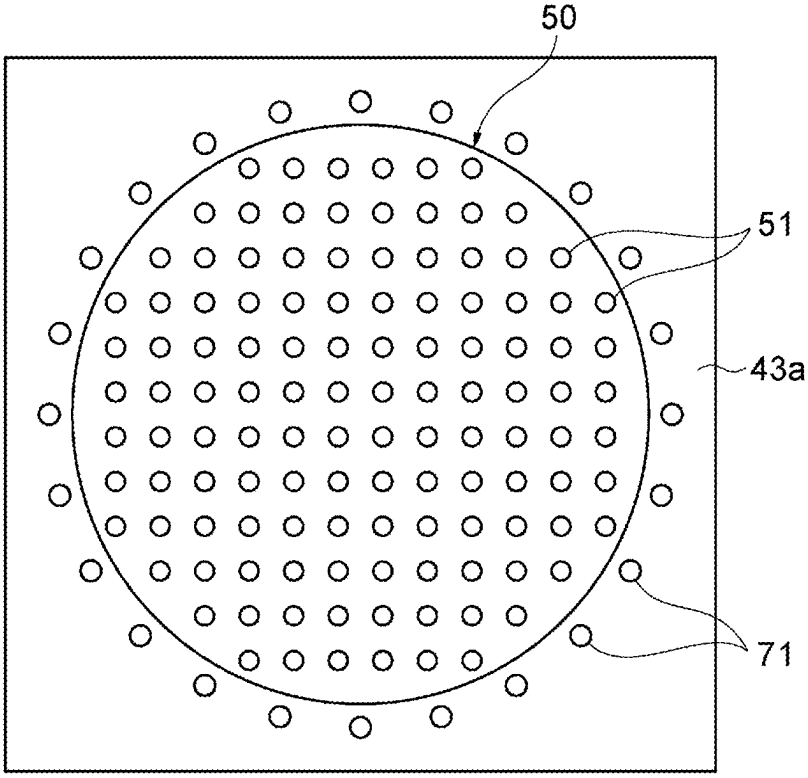

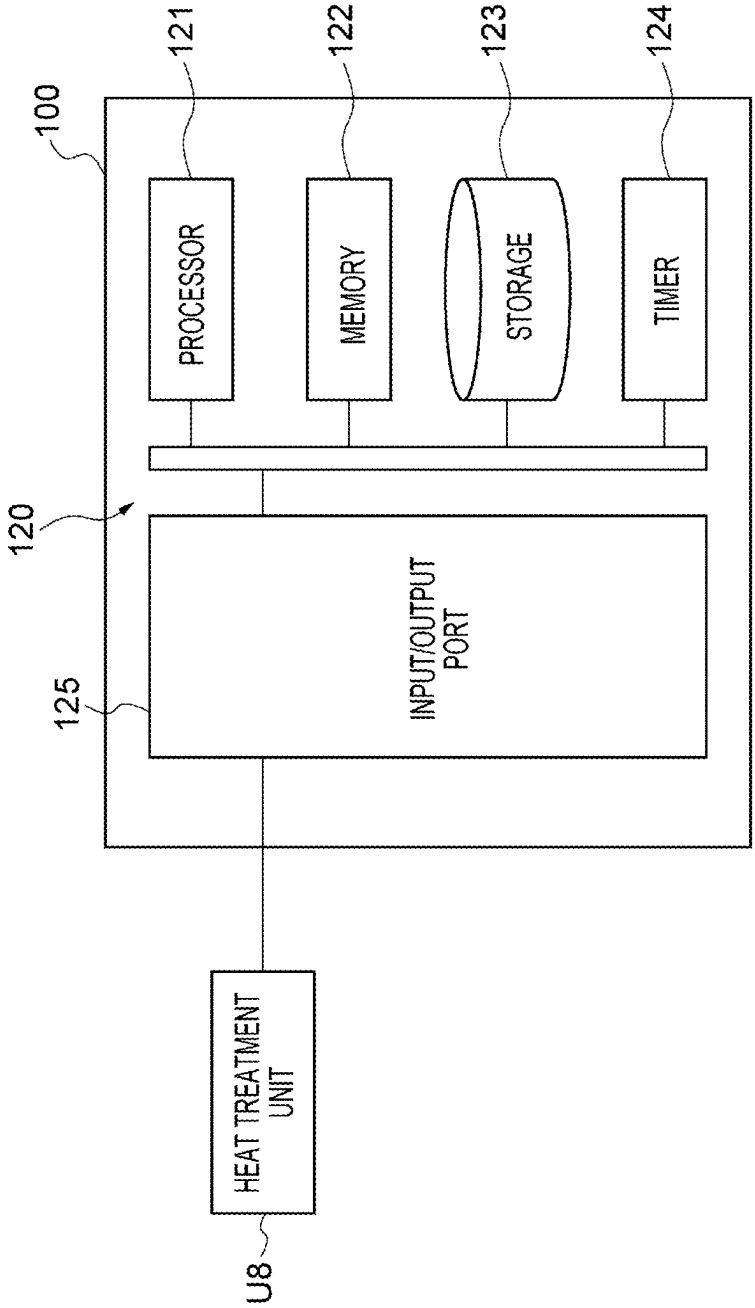
100
121
122
123
124
PROCESSOR
MEMORY
STORAGE
TIMER
120
125
INPUT/OUTPUT PORT
HEAT TREATMENT UNIT
U8

FIG. 6

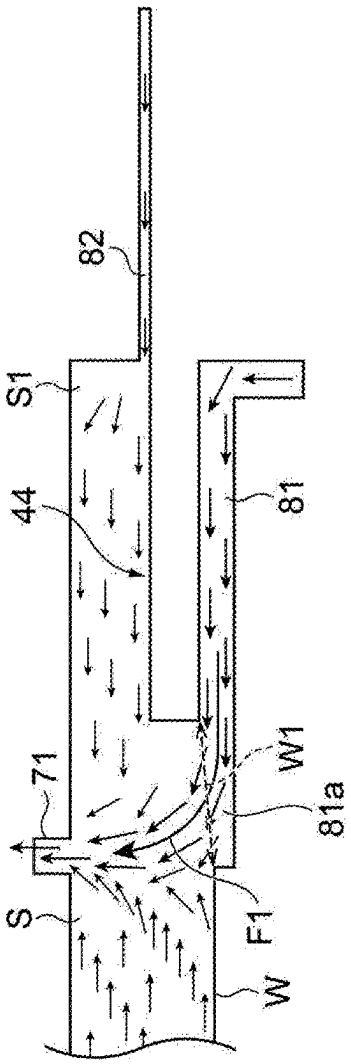

FIG. 7A

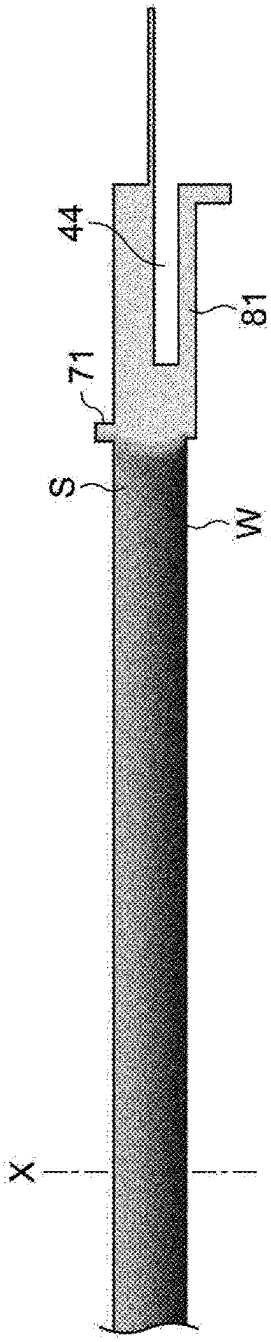

FIG. 7B

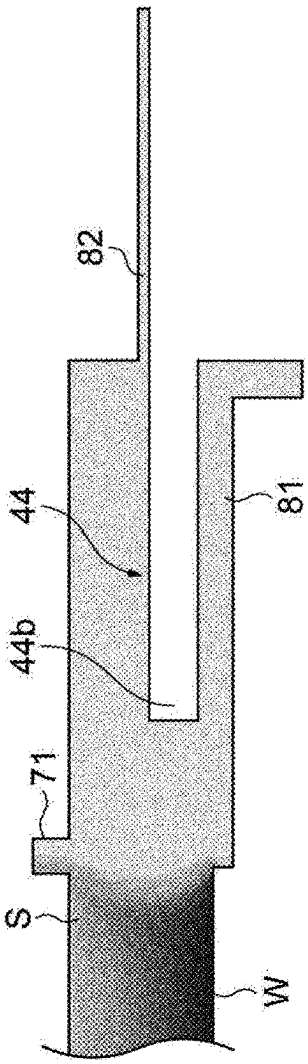

FIG. 7C

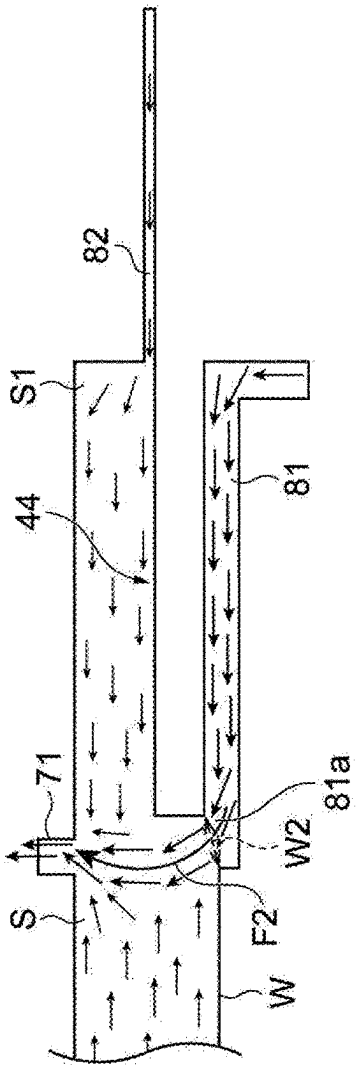

FIG. 8A

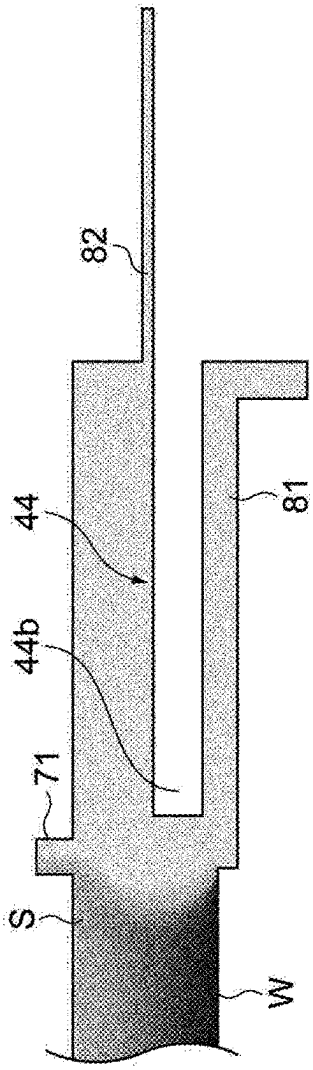

FIG. 8B

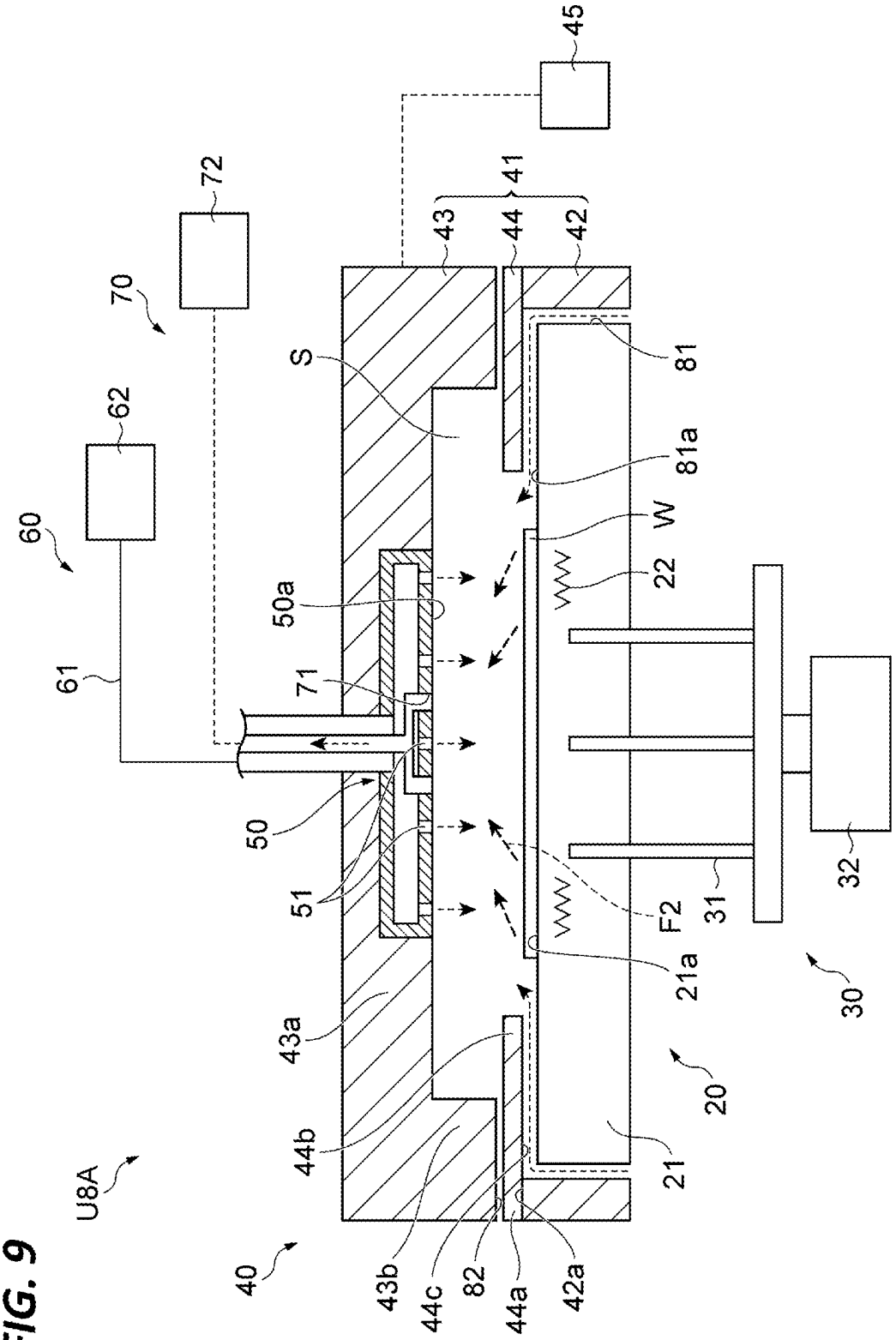
45
72
70
62
60
61
41
43
44
42
S
81
81a
W
22
50a
71
50
51
F2
21a
31
32
30
43a
44b
20
21
U8A
40
43b
44c
82
44a
42a

FIG. 9

HEAT TREATMENT DEVICE AND TREATMENT METHOD

CROSS-REFERENCE TO RELATED APPLICATIONS

[0001] This application is a continuation of U.S. patent application Ser. No. 18/626,475, filed on Apr. 4, 2024, which is a continuation of U.S. patent application Ser. No. 17/948,707, filed on Sep. 20, 2022, which is a continuation of U.S. patent application Ser. No. 16/934,097, filed on Jul. 21, 2020, which claims priority from Japanese Patent Application Nos. 2019-134446 and 2019-224598 filed on Jul. 22, 2019 and Dec. 12, 2019, respectively, all of which are incorporated herein in their entireties by reference.

TECHNICAL FIELD

[0002] The present disclosure relates to a heat treatment device and a heat treatment method.

BACKGROUND

[0003] In order to implement a finer resist pattern, a heat treatment on a substrate using a metal-containing resist as a resist that contains metal has been suggested (see e.g., Japanese Patent Laid-Open Publication No. 2016-530565).

SUMMARY

[0004] According to one aspect of the present disclosure, a heat treatment device is a heat treatment device that performs heat treatment on a substrate on which a film of a resist is formed, after an exposure processing is performed on the film. The heat treatment device includes: a heating plate that supports and heats the substrate; a chamber that covers a processing space above the heating plate; a gas ejecting unit that ejects a processing gas from above toward the substrate on the heating plate within the chamber; a gas supply unit that supplies a gas into the chamber from below a surface of the substrate, in the chamber; and an exhaust unit that evacuates inside of the chamber through exhaust holes that are formed above the processing space and open downwards.

[0005] The foregoing summary is illustrative only and is not intended to be in any way limiting. In addition to the illustrative aspects, embodiments, and features described above, further aspects, embodiments, and features will become apparent by reference to the drawings and the following detailed description.

BRIEF DESCRIPTION OF THE DRAWINGS

[0006] FIG. **1** is a view illustrating a schematic configuration of a substrate processing system according to one embodiment.

[0007] FIG. **2** is a schematic view illustrating the internal configuration of a substrate processing apparatus.

[0008] FIG. **3** is a flowchart illustrating an example of a substrate processing method.

[0009] FIG. **4** is a schematic view illustrating the configuration of a heat treatment unit according to a first embodiment.

[0010] FIG. **5** is a schematic view illustrating the configuration of the vicinity of a gas ejecting unit of the heat treatment unit.

[0011] FIG. **6** is a block diagram illustrating a hardware configuration of a control device.

[0012] FIGS. **7**A to **7**C are views illustrating a simulation result according to movement of a gas and a sublimate in the heat treatment unit.

[0013] FIGS. **8**A and **8**B are views illustrating a simulation result according to movement of a gas and a sublimate in the heat treatment unit.

[0014] FIG. **9** is a schematic view illustrating the configuration of a heat treatment unit according to a second embodiment.

DESCRIPTION OF EMBODIMENT

[0015] In the following detailed description, reference is made to the accompanying drawing, which form a part hereof. The illustrative embodiments described in the detailed description, drawing, and claims are not meant to be limiting. Other embodiments may be utilized, and other changes may be made without departing from the spirit or scope of the subject matter presented here.

[0016] Hereinafter, various embodiments will be described.

[0017] A heat treatment device according to one embodiment is a heat treatment device that performs heat treatment on a substrate on which a film of a resist is formed, after an exposure processing is performed on the film. The heat treatment device includes: a heating plate that supports and heats the substrate; a chamber that covers a processing space above the heating plate; a gas ejecting unit that ejects a processing gas from above toward the substrate on the heating plate within the chamber; a gas supply unit that supplies a gas into the chamber from below a surface of the substrate, in the chamber; and an exhaust unit that evacuates inside of the chamber through exhaust holes that are formed above the processing space and open downwards.

[0018] According to the above-described heat treatment device, a processing gas is ejected from the gas ejecting unit toward the surface of the substrate so that the heat treatment of the substrate is facilitated. Meanwhile, the heat treatment device includes the gas supply unit that supplies a gas into the chamber from below the surface of the substrate, and the exhaust unit that evacuates inside of the chamber from the exhaust hole that is formed above the processing space and is open downwards. Thus, a gas flowing between these forms an upward flow around the substrate. Thus, the movement of a sublimate generated from the substrate during the heat treatment is blocked by the upward flow. Therefore, it is possible to suppress scattering of the sublimate from the film on the substrate.

[0019] In the aspect, the film may be a film including a metal-containing resist.

[0020] When a metal-containing resist is used, since a sublimate from a film contains a metal component, influence by adhesion to each unit within the device may be large. Meanwhile, by employing the above-described configuration, it is possible to suppress the scattering of the sublimate that contains the metal component from the film on the substrate. Therefore, it is possible to effectively reduce the influence by adhesion of the sublimate to the device.

[0021] In the aspect, the exhaust hole may be formed inside a periphery edge of the gas ejecting unit.

[0022] When the exhaust hole is formed inside the periphery edge of the gas ejecting unit, the gas toward the exhaust hole, that is, the gas including the sublimate from the film on

the substrate, forms an upward flow toward the inside of the periphery edge of the gas ejecting unit. Thus, it is possible to suppress the sublimate from scattering from the film on the substrate to the outside of the substrate.

[0023] In the aspect, at least a part of the exhaust hole may be formed at a periphery outside the substrate.

[0024] When at least a part of the exhaust hole is formed at the periphery outside the substrate, since a flow of a gas toward the exhaust hole at the top side is formed around the substrate, the movement of the sublimate to the outside of the flow of the gas toward the exhaust hole is suppressed. Therefore, it is possible to suppress the sublimate from scattering from the film on the substrate to the outside of the substrate.

[0025] In the aspect, the gas supply unit may supply the gas into the chamber from a periphery outside the substrate.

[0026] A gas is supplied from the periphery outside the substrate into the chamber, and thus it is possible to form an upward flow in which the air flow is further strengthened, around the substrate.

[0027] In the aspect, the gas supply unit may include: a gas flow path connected to the inside of the chamber; and a rectifying unit that controls a flow path area at an end portion of the gas flow path on the chamber side.

[0028] Since the rectifying unit is provided, it is possible to control a flow path area at the end portion of the gas flow path on the chamber side. By employing a configuration where the flow path area is controlled, for example, it is also possible to control an upward flow such that it is possible to further suppress the scattering of a sublimate. It is also possible to control the upward flow in consideration of the quality of a resist pattern on the substrate.

[0029] In the aspect, an outer space may be provided within the chamber, above the rectifying unit outside the exhaust unit in a radial direction of the substrate; a second gas supply unit different from the gas supply unit may be provided, which is connected to the outer space and supplies a gas into the chamber; and the second gas supply unit may be connected to the outer space on the rectifying unit side.

[0030] As described above, when the outer space is formed outside the exhaust unit in the radial direction of the substrate, and a gas is also supplied from the second gas supply unit connected to the outer space, the gas that is supplied from the second gas supply unit and moves in the outer space also moves toward the exhaust hole. Thus, the disturbance of an upward flow may be prevented within the chamber, and the scattering of a sublimate may be suppressed. The second gas supply unit is configured to be connected to the outer space on the rectifying unit side. Thus, like the upward flow, the gas from the second gas supply unit may move toward the exhaust hole while moving upwards, and thus, the gas may be prevented from staying in the outer space and the vicinity thereof.

[0031] In the aspect, the gas supply unit may include a gas flow path connected to the inside of the chamber, and the gas flow path may be capable of transferring heat from the heating plate.

[0032] Through the above-described configuration, a gas that moves through the gas flow path is supplied into the chamber in a state where the gas is heated by the heat from the heating plate. Therefore, it is possible to suppress, for example, temperature fluctuation due to supplying of the gas.

[0033] In the aspect, the gas ejecting unit may include a plurality of ejecting holes scattered along a surface facing the substrate on the heating plate.

[0034] Through the above-described configuration, since a processing gas may be more uniformly ejected toward the surface of the substrate from the gas ejecting unit, the quality of a resist pattern may be enhanced.

[0035] A heat treatment method according to another embodiment is a heat treatment method in which heat treatment is performed on a substrate on which a film of a resist is formed by supporting and heating on a heating plate after an exposure processing is performed on the film. The method includes supplying a gas into a chamber from below a surface of the substrate, within the chamber, and evacuating inside of the chamber from an exhaust hole that is formed above a processing space within the chamber and is open downwards, so that the heat treatment is performed while an upward flow is formed around the substrate.

[0036] According to the above-described heat treatment method, a gas is supplied into the chamber from below the surface of the substrate, and the inside of the chamber is evacuated from the exhaust hole that is formed above the processing space and is open downwards so that the heat treatment is performed while the upward flow is formed around the substrate. Thus, the movement of a sublimate generated from the substrate during the heat treatment is blocked by the upward flow. Therefore, it is possible to suppress scattering of the sublimate from the film on the substrate.

[0037] Hereinafter, various embodiments will be described in detail with reference to drawings. Meanwhile, in the drawings, the same or corresponding parts will be denoted by the same reference numerals.

First Embodiment

[Substrate Processing System]

[0038] A substrate processing system according to a first embodiment will be described with reference to FIGS. **1** to **6**. A substrate processing system **1** is a system that forms a photosensitive film on a substrate, exposes the photosensitive film, and develops the photosensitive film. A substrate to be processed is, for example, a semiconductor wafer W. The photosensitive film is, for example, a resist film. The substrate processing system **1** includes a coating/developing apparatus **2** and an exposure apparatus **3**. The exposure apparatus **3** is an apparatus that exposes a resist film (photosensitive film) formed on the wafer W (substrate). Specifically, the exposure apparatus **3** irradiates an exposure target portion of the resist film with energy rays by a method such as immersion exposure. The coating/developing apparatus **2** performs a processing of coating a resist (chemical solution) on the surface of the wafer W (substrate) and forming a resist film before the exposure processing by the exposure apparatus **3**, and performs a development processing of the resist film after the exposure processing. In the following embodiments, descriptions will be made on a case where the substrate processing system **1** forms a metal-containing resist film by using a resist that contains a metal (hereinafter, referred to as a "metal-containing resist"). For example, the substrate processing system **1** may form the film by using a tin (Sn)-containing resist. Meanwhile, the type of the resist is not limited to the above.

[Substrate Processing Apparatus]

[0039] Hereinafter, descriptions will be made on the configuration of the coating/developing apparatus **2** as an example of a substrate processing apparatus. As illustrated in FIG. **1** and FIG. **2**, the coating/developing apparatus **2** includes a carrier block **4**, a processing block **5**, an interface block **6**, and a control device **100**.

[0040] The carrier block **4** carries wafers W into the coating/developing apparatus **2** and carries the wafers W out of the coating/developing apparatus **2**. For example, the carrier block **4** is able to support a plurality of carriers C for the wafers W. Within the carrier block **4**, a transfer device A**1** including a delivery arm is included. The carrier C accommodates, for example, a plurality of circular wafers W. The transfer device A**1** takes the wafers W out of the carrier C and delivers the wafers W to the processing block **5**, and receives the wafers W from the processing block **5** and returns the wafers W into the carrier C. The processing block **5** includes a plurality of processing modules **11**, **12**, **13**, and **14**.

[0041] Within the processing module **11**, a coating unit U**1**, a heat treatment unit U**2**, and a transfer device A**3** that transfers wafers W to these units are included. The processing module **11** forms an underlayer film on the surface of the wafer W by the coating unit U**1** and the heat treatment unit U**2**. The coating unit U**1** coats a processing liquid for forming the underlayer film, on the wafer W. The heat treatment unit U**2** performs various heat treatments involved in formation of the underlayer film.

[0042] The processing module **12** performs a deposition processing of forming a film of a metal-containing resist. Within the processing module **12**, a coating unit U**3**, a heat treatment unit U**4**, and a transfer device A**3** that transfers wafers W to these units are included. The processing module **12** forms the film of the metal-containing resist on the underlayer film by the coating unit U**3** and the heat treatment unit U**4**. The coating unit U**3** coats the metal-containing resist as a processing liquid for film formation, on the underlayer film. The heat treatment unit U**4** performs various heat treatments involved in formation of the film. Accordingly, the film of the metal-containing resist is formed on the surface of the wafer W.

[0043] Within the processing module **13**, a coating unit U**5**, a heat treatment unit U**6**, and a transfer device A**3** that transfers wafers W to these units are included. The processing module **13** forms an upper-layer film on the resist film by the coating unit U**5** and the heat treatment unit U**6**. The coating unit U**5** coats a liquid for forming the upper-layer film, on the resist film. The heat treatment unit U**6** performs various heat treatments involved in formation of the upper-layer film.

[0044] Within the processing module **14**, a developing unit U**7** (development processing unit), a heat treatment unit U**8**, and a transfer device A**3** that transfers wafers W to these units are included. The processing module **14** performs a development processing on the film on which an exposure processing has been performed, and a heat treatment involved in the development processing, by the developing unit U**7** and the heat treatment unit U**8**. Accordingly, a resist pattern using the metal-containing resist is formed on the surface of the wafer W. Specifically, the heat treatment unit U**8** performs a heat treatment (PEB: post exposure bake) before the development processing. The developing unit U**7** performs the development processing on the wafer W on which the heat treatment (PEB) has been performed by the heat treatment unit U**8**. For example, the developing unit U**7** performs the development processing on the film of the metal-containing resist by coating a developing solution on the surface of the wafer W which has been subjected to exposure, and washing the surface with a rinse solution. The heat treatment unit U**8** may perform a heat treatment after the development processing (PB: post bake). Hereinafter, unless otherwise specified, the heat treatment in the heat treatment unit U**8** will be described as "a heat treatment before a development processing (PEB)." The film of the metal-containing resist will be simply described as a "film."

[0045] A shelf unit U**10** is provided on the carrier block **4** side in the processing block **5**. The shelf unit U**10** is divided into a plurality of cells arranged in the vertical direction. A transfer device A**7** including a lifting arm is provided near the shelf unit U**10**. The transfer device A**7** raises and lowers wafers W between cells of the shelf unit U**10**.

[0046] A shelf unit U**11** is provided on the interface block **6** side in the processing block **5**. The shelf unit U**11** is divided into a plurality of cells arranged in the vertical direction.

[0047] The interface block **6** delivers wafers W to/from the exposure apparatus **3**. For example, within the interface block **6**, a transfer device A**8** including a delivery arm is included. The interface block **6** is connected to the exposure apparatus **3**. The transfer device A**8** delivers the wafers W disposed on the shelf unit U**11** to the exposure apparatus **3**. The transfer device A**8** receives the wafers W from the exposure apparatus **3** and returns the wafers W to the shelf unit U**11**.

[0048] FIG. **3** illustrates an example of a substrate processing procedure including a coating/development processing. The control device **100** controls the coating/developing apparatus **2** so as to execute a coating/development processing by, for example, the following procedure. First, the control device **100** controls the transfer device A**1** so as to transfer a wafer W within the carrier C to the shelf unit U**10**, and controls the transfer device A**7** so as to dispose the wafer W on a cell for the processing module **11**.

[0049] Next, the control device **100** controls the transfer device A**3** so as to transfer the wafer W in the shelf unit U**10**, to the coating unit U**1** and the heat treatment unit U**2** within the processing module **11**. The control device **100** controls the coating unit U**1** and the heat treatment unit U**2** so as to form an underlayer film on the surface of the wafer W (step S**01**). Then, the control device **100** controls the transfer device A**3** so as to return the wafer W on which the underlayer film is formed, to the shelf unit U**10**, and controls the transfer device A**7** so as to dispose the wafer W on a cell for the processing module **12**.

[0050] Next, the control device **100** controls the transfer device A**3** so as to transfer the wafer W in the shelf unit U**10**, to the coating unit U**3** and the heat treatment unit U**4** within the processing module **12**. The control device **100** controls the coating unit U**3** and the heat treatment unit U**4** so as to form a film of a metal-containing resist on the underlayer film of the wafer W (step S**02**). Then, the control device **100** controls the transfer device A**3** so as to return the wafer W to the shelf unit U**10**, and controls the transfer device A**7** so as to dispose the wafer W on a cell for the processing module **13**.

[0051] Next, the control device **100** controls the transfer device A**3** so as to transfer the wafer W in the shelf unit U**10**

to each unit within the processing module **13**. The control device **100** controls the coating unit U**5** and the heat treatment unit U**6** so as to form an upper-layer film on the film of the wafer W (step S**03**). Then, the control device **100** controls the transfer device A**3** so as to transfer the wafer W to the shelf unit U**11**.

[0052] Next, the control device **100** controls the transfer device A**8** so as to send the wafer W accommodated in the shelf unit U**11**, to the exposure apparatus **3**. Then, in the exposure apparatus **3**, an exposure processing is performed on the film formed on the wafer W (step S**04**). Then, the control device **100** controls the transfer device A**8** so as to receive the wafer W on which the exposure processing has been performed, from the exposure apparatus **3**, and to dispose the wafer W, on a cell for the processing module **14** in the shelf unit U**11**.

[0053] Next, the control device **100** controls the transfer device A**3** so as to transfer the wafer W in the shelf unit U**11** to the heat treatment unit U**8** within the processing module **14**. Then, the control device **100** controls the heat treatment unit U**8** so as to perform a heat treatment on the film of the wafer W prior to development (step S**05**). Next, the control device **100** controls the developing unit U**7** and the heat treatment unit U**8** so as to perform a development processing on the film of the wafer W on which the heat treatment has been performed by the heat treatment unit U**8**, and to perform a heat treatment after the development processing (step S**06**, S**07**). Then, the control device **100** controls the transfer device A**3** so as to return the wafer W to the shelf unit U**10**, and controls the transfer device A**7** and the transfer device A**1** so as to return the wafer W into the carrier C. As described above, the substrate processing including the coating/development processing is completed.

[0054] Meanwhile, a specific configuration of the substrate processing apparatus is not limited to the configuration of the coating/developing apparatus **2** exemplified above. As for the substrate processing apparatus, any apparatus may be employed as long as it includes a unit that performs a deposition processing of forming a film of a metal-containing resist, a heat treatment unit that performs a heat treatment on the film after an exposure processing, a developing unit that performs a development processing on the film, and a control device capable of controlling these.

(Heat Treatment Unit)

[0055] Subsequently, an example of the heat treatment unit U**8** of the processing module **14** will be described in detail with reference to FIGS. **4** and **5**. As illustrated in FIG. **4**, the heat treatment unit U**8** includes a heating mechanism **20**, a wafer lifting mechanism **30** (lifting unit), an accommodating mechanism **40**, a gas supply mechanism **60** (gas supply unit), and an exhaust mechanism **70** (exhaust unit). Meanwhile, in FIG. **4**, hatching indicating a cross section is omitted except in some elements.

[0056] The heating mechanism **20** is configured to heat a wafer W. The heating mechanism **20** includes a heating plate **21**. The heating plate **21** includes a heating plate heater **22**. The heating plate **21** supports the wafer W as a heat treatment target, and heats the supported wafer W. The heating plate **21** is formed in substantially a disc shape as an example. The diameter of the heating plate **21** may be larger than the diameter of the wafer W. The heating plate **21** has a placing surface **21***a*. When the wafer W is placed on a predetermined position of the placing surface **21***a*, the heating plate **21** supports the wafer W. The heating plate **21** may be made of a metal having a high thermal conductivity, such as aluminum, silver, or copper.

[0057] The heating plate heater **22** raises the temperature of the heating plate **21**. The heating plate heater **22** may be provided inside the heating plate **21**, or may be provided on the heating plate **21**. The heating plate heater **22** may be constituted by a resistance heating element. While a current flows through the heating plate heater **22**, the heating plate heater **22** generates heat. Then, as the heat from the heating plate heater **22** is transferred, the temperature of the heating plate **21** is raised. A current having a value according to an instruction from the control device **100** may flow through the heating plate heater **22**, or after a voltage of a value according to an instruction from the control device **100** is applied, a current according to the voltage value may flow.

[0058] The wafer lifting mechanism **30** is configured to raise and lower the wafer W above the heating plate **21**. Specifically, the wafer lifting mechanism **30** raises and lowers the wafer W between a processing height at which the wafer W is placed on the placing surface **21***a* of the heating plate **21**, and a delivery height at which the wafer W is delivered in the upper portion separated from the heating plate **21**. The wafer lifting mechanism **30** includes a plurality of (for example, three) support pins **31**, and a lift driving unit **32**.

[0059] The support pins **31** are pins that support the wafer W from below. For example, the support pins **31** may be configured to extend through the heating plate **21** in the vertical direction. The plurality of support pins **31** may be arranged at equal intervals in the circumferential direction around the center of the heating plate **21**. The lift driving unit **32** raises and lowers the support pins **31** according to an instruction of the control device **100**. The lift driving unit **32** is, for example, a lifting actuator.

[0060] The accommodating mechanism **40** is configured to accommodate the wafer W as the heat treatment target. The accommodating mechanism **40** includes a chamber **41**, and a chamber driving unit **45**. The chamber **41** is configured to form a processing space S where a heat treatment is performed. That is, the chamber **41** covers the processing space S above the heating plate **21**. The chamber **41** includes a lower chamber **42**, an upper chamber **43**, and a support ring **44** provided between the lower chamber **42** and the upper chamber **43**.

[0061] The lower chamber **42** is provided around the heating plate **21**. The lower chamber **42** may have a cylindrical shape so as to surround the peripheral portion of the heating plate **21**. A space that communicates with the internal processing space S may be formed between the lower chamber **42** and the heating plate **21**. This space functions as a gas flow path **81** that interconnects the inside and the outside of the processing space S. The gas flow path **81** may be annularly formed. When the lower chamber **42** is configured to hold the heating plate **21**, it is possible to employ a configuration where a plurality of through holes is formed in the lower chamber **42** such that a plurality of gas flow paths **81** may be annularly formed between the lower chamber **42** and the heating plate **21** while lined up. The lower chamber **42** may be fixed to a predetermined position in the heat treatment unit U**8**.

[0062] When the gas flow path **81** is arranged as illustrated in FIG. **4**, it is possible to employ a configuration where heat of the heating plate **21** may be transferred to the gas flow

path **81**. That is, heat generated by the heating plate heater **22** is transferred by heat conduction to the surface of the heating plate **21** forming a part of the gas flow path **81**. The surface of the heating plate **21** forming the gas flow path **81** contacts the gas flowing through the gas flow path **81**. When this configuration is employed, a gas within the gas flow path **81** may be heated by the heat from the heating plate **21**. Further, since the configuration is provided not only in a part of the periphery of the substrate but also over the entire periphery thereof, the temperature of the substrate may be suppressed from being non-uniform.

[0063] The support ring **44** may be a plate-shaped and annular member attached to an upper end **42***a* of the lower chamber **42**. In the support ring **44**, an outer periphery edge **44***a* is fixed to the upper end **42***a* of the lower chamber **42**, the inner periphery side protrudes toward the center side of the processing space S, and an inner periphery edge **44***b* is located at a position overlapping the heating plate **21** when viewed from the top. The inner periphery edge **44***b* of the support ring **44** is located at a position not overlapping the wafer W on the heating plate **21** when viewed from the top. A lower surface **44***c* of the support ring **44** and the placing surface **21***a* of the heating plate **21** are separated from each other, and this space becomes a part of the gas flow path **81** communicating with the processing space S. The gas flow path **81** and the support ring **44** described above function as a gas supply unit that supplies a gas into the chamber **41** from below the surface of the wafer W.

[0064] The upper chamber **43** is a lid that forms the processing space S within the chamber **41** together with the lower chamber **42**. When the upper chamber **43** is abutted on the lower chamber **42**, the processing space S is formed within the chamber **41**. The upper chamber **43** may include a top plate **43***a*, and a side wall **43***b*.

[0065] The top plate **43***a* has a disc shape having a diameter that is about the same as the lower chamber **42** and the support ring **44**. The top plate **43***a* is disposed to face the placing surface **21***a* of the heating plate **21** in the vertical direction. That is, the top plate **43***a* covers the placing surface **21***a* of the heating plate **21**. The bottom surface of the top plate **43***a* constitutes the top surface of the processing space S. The side wall **43***b* is configured to extend downwards from the outer edge of the top plate **43***a*. The side wall **43***b* surrounds the placing surface **21***a* of the heating plate **21**. The inner surface of the side wall **43***b* constitutes the peripheral surface of the processing space S.

[0066] The chamber driving unit **45** raises and lowers the upper chamber **43**. For example, the chamber driving unit **45** is a lifting actuator. When the upper chamber **43** is raised by the chamber driving unit **45**, the chamber **41** is placed in an open state. When the upper chamber **43** is lowered by the chamber driving unit **45** until being abutted on the support ring **44** on the lower chamber **42**, the chamber **41** is placed in a close state. When the chamber **41** is in a close state, the processing space S is formed within the chamber **41**. When the chamber **41** is in an open state, a space above the heating plate **21** is connected to a space outside the chamber **41**. Meanwhile, even in a state where the processing space S is formed due to the close state of the chamber **41**, a small space may be formed between the upper chamber **43** and the support ring **44**. This space may become a gas flow path **82**. Even in a state where the processing space S is formed due to the close state of the chamber **41**, the processing space S is connected to the external space via the gas flow path **81** formed by the heating plate **21**, the lower chamber **42**, and the support ring **44**. Meanwhile, as compared to that in the open state, the flow path communicated between the inside and outside of the processing space S is limited, and thus, the amount of a gas that may be moved is limited.

[0067] The upper chamber **43** includes a gas ejecting unit **50**. The gas ejecting unit **50** ejects a gas from above toward the wafer W on the heating plate **21** within the chamber **41**. The gas ejecting unit **50** ejects a moisture-containing gas toward the wafer W on the heating plate **21**. The gas ejecting unit **50** may eject a gas other than the moisture-containing gas. For example, the gas ejecting unit **50** may eject an inert gas toward the wafer W on the heating plate **21**. The gas ejecting unit **50** is provided in the top plate **43***a*. The gas ejecting unit **50** includes a buffer space formed on the lower side within the top plate **43***a*, and a plurality of gas ejecting holes **51** passing between the buffer space and the processing space S, on the bottom surface of the top plate **43***a*.

[0068] The ejecting holes **51** are scattered at a substantially uniform density within a portion (an opposing surface **50***a*) of the bottom surface of the top plate **43***a* facing the wafer W on the heating plate **21**. For example, as illustrated in FIG. **5**, the ejecting holes **51** are disposed in a scattered manner in a region of the opposing surface **50***a* facing the wafer W on the heating plate **21** (hereinafter, referred to as a "facing region"). The facing region is a region of the opposing surface **50***a* overlapping the wafer W on the heating plate **21** when viewed in the vertical direction. When the gas ejecting unit **50** ejects a moisture-containing gas, the ejecting holes **51** may be scattered (may be disposed in a scattered manner) such that the moisture amount (humidity) in the space on the upper surface of the wafer W may become substantially uniform over the whole region of the upper surface of the wafer W. The ejecting holes **51** may be scattered such that the hole density may become uniform in the facing region. The hole density is an occupation ratio of opening areas of the ejecting holes **51** per unit area within the facing region. Meanwhile, the region where the ejecting holes **51** are formed is formed while not including the outside of the facing region described above. That is, the ejecting holes **51** are formed only in a region overlapping the wafer W in a plan view, and are not formed outside thereof.

[0069] The opening areas of the ejecting holes **51** may be substantially the same. When viewed in the vertical direction, the shape of the ejecting holes **51** may be a circular shape. Intervals between the ejecting holes **51** may be uniform in the horizontal direction, and intervals between the ejecting holes **51** may be uniform in the longitudinal direction. Intervals between the ejecting holes **51** may be uniform in both the horizontal direction and the longitudinal direction.

[0070] Referring back to FIG. **4**, the gas supply mechanism **60** is configured to supply a processing gas as a gas used for a heat treatment of the wafer W, to the gas ejecting unit **50**. The gas supply mechanism **60** may supply a moisture-containing gas or an inert gas to the gas ejecting unit **50**. For example, the gas supply mechanism **60** includes a gas supply path **61**, and a gas supply source **62**. Meanwhile, a plurality of gas supply sources may be provided according to, for example, the types of gases to be supplied. As necessary, for example, a gas switching unit may be provided.

[0071] The gas supply path **61** is a flow path for supplying a gas to the gas ejecting unit **50**. One end of the gas supply

path **61** is connected to the gas ejecting unit **50**. The other end of the gas supply path **61** is connected to the gas supply source **62**. For example, a valve for controlling a gas amount of a gas to be supplied to the gas ejecting unit **50** may be provided on the gas supply path **61**. The valve may be configured to switch opening and closing on the basis of an instruction from the control device **100**.

[0072] The gas supply source **62** supplies a gas to the gas ejecting unit **50** via the gas supply path **61**. The gas supply source **62** may supply, for example, a moisture-containing gas whose moisture concentration has been adjusted toward the gas ejecting unit **50**. The gas supply source **62** may supply an inert gas toward the gas ejecting unit **50**. The inert gas is a gas that hardly reacts with a metallic sublimate generated from a film when the wafer W is heated. The gas supply source **62** may supply, as the inert gas, a gas having a lower oxygen concentration, or a gas having a lower humidity than the moisture-containing gas. For example, the gas supply source **62** may supply nitrogen (N_2) gas as the gas having a low oxygen concentration, or may supply dry air as the gas having a low humidity.

[0073] The exhaust mechanism **70** (exhaust unit) is configured to discharge a gas within the chamber **41** to the outside of the chamber **41**. The exhaust mechanism **70** evacuates the inside of the chamber from the outer periphery of the processing space S via exhaust holes formed outside the gas ejecting unit **50**. The exhaust mechanism **70** includes a plurality of exhaust holes **71**, and an exhaust device **72**. As exemplified in FIG. **5**, the plurality of exhaust holes **71** is formed in the outer periphery portion of the opposing surface **50***a* of the gas ejecting unit **50** corresponding to the wafer W. The exhaust holes **71** are formed within the top plate **43***a* of the upper chamber **43**, and each is open in the outer periphery portion in the inner surface of the top plate **43***a* (that is, in the outer periphery portion of the top surface of the processing space S). The shape of the exhaust holes **71** within the top plate **43***a* is not particularly limited. The exhaust device **72** discharges a gas within the processing space S to the outside of the chamber **41** via the plurality of exhaust holes **71**. The exhaust device **72** is, for example, an exhaust pump. Meanwhile, the exhaust holes **71** may be annularly formed outside the gas ejecting unit **50**. Meanwhile, the exhaust holes **71** may be configured such that at least a part of the exhaust holes **71** is formed outside the outer periphery of the wafer W when viewed from above. That is, the exhaust holes **71** may be formed at a position where a part of the exhaust holes **71** overlaps the wafer W when viewed from the top.

[0074] In the processing space S, an end portion **81***a* of the gas flow path **81** (an end portion on the processing space S side) is formed on the outer periphery side around the wafer W. The end portion **81***a* is formed outside the outer periphery of the wafer W (outside the wafer W in the radial direction). The position of the end portion **81***a* may be lower than the upper surface of the wafer W. The position of the end portion **81***a* of the gas flow path **81** may be controlled by the position or shape of the inner periphery edge **44***b* of the support ring **44**. That is, the support ring **44** also functions as a rectifying unit that regulates a movement route of a gas moving through the gas flow path **81**, and controls a flow path area.

[0075] Above the support ring **44** protruding toward the center within the processing space S, an outer space S**1** is formed while being continuous from a gap with the top plate **43***a* of the upper chamber **43**, which may become the gas flow path **82**. The outer space S**1** is formed on the outer periphery side of the exhaust holes **71** of the exhaust mechanism **70** in the radial direction of the heat treatment unit U**8**. The outer space S**1** has a larger cross-sectional area than the gas flow path **82** when viewed in the vertical direction. Therefore, the flow velocity of a gas introduced to the outer space S**1** from the gas flow path **82** is decreased in the outer space S**1**. The gas flow path **82** functions as a second gas supply unit that supplies a gas to the outer space S**1** within the processing space S.

[0076] Meanwhile, the type of a gas to be supplied from the gas flow path **81** and the gas flow path **82** is not particularly limited, and may be, for example, atmosphere. It is possible to employ a configuration in which a gas supply source is connected to the gas flow path **81** and the gas flow path **82** so as to supply a processing gas.

(Control Device)

[0077] As illustrated in FIG. **1**, the control device **100** includes a storage **101** and a controller **102** as a functional configuration. The storage **101** stores a program for operating units of the coating/developing apparatus **2** which include the heat treatment unit U**8**. The storage **101** also stores various data pieces (for example, information on an instruction signal for operating the heat treatment unit U**8**), or information from, for example, sensors provided in the units. The storage **101** is, for example, a semiconductor memory, an optical recording disc, a magnetic recording disk, or a magneto-optical recording disk. The program may be included in an external storage device separate from the storage **101**, or an intangible medium such as a propagation signal. The program may be installed in the storage **101** from these other media, and may be stored in the storage **101**. The controller **102** controls operations of the units of the coating/developing apparatus **2** on the basis of the program read from the storage **101**.

[0078] The control device **100** is constituted by one or a plurality of control computers. For example, the control device **100** includes a circuit **120** illustrated in FIG. **6**. The circuit **120** includes one or a plurality of processors **121**, a memory **122**, a storage **123**, a timer **124**, and an input/output port **125**. The storage **123** includes a computer-readable storage medium such as, for example, a hard disk. The storage medium stores a program that causes the control device **100** to execute a substrate processing procedure to be described below. The storage medium may be a removable medium such as a non-volatile semiconductor memory, a magnetic disk or an optical disc. The memory **122** temporarily stores the program loaded from the storage medium of the storage **123** and calculation results by the processor **121**. The processor **121** configures each function module described above by executing the program in cooperation with the memory **122**. The timer **124** measures an elapsed time by counting, for example, reference pulses in a fixed period. The input/output port **125** inputs/outputs an electrical signal to/from the heat treatment unit U**8** according to an instruction from the processor **121**.

[0079] Meanwhile, a hardware configuration of the control device **100** is not necessarily limited to the configuration of each function module by the program. For example, each function module of the control device **100** may be configured by a dedicated logic circuit or an application specific integrated circuit (ASIC) in which this is integrated.

[On Operation in Heat Treatment Unit]

[0080] Referring back to FIG. **4**, descriptions will be made on operations during a heat treatment in the heat treatment unit U**8**. At the time of the heat treatment, first, the controller **102** of the control device **100** raises the upper chamber **43** by driving the chamber driving unit **45**. Accordingly, the space inside the chamber **41** is connected to the space outside the chamber **41**. Next, the controller **102** of the control device **100** controls the transfer device A**3** and the wafer lifting mechanism **30** so as to load the wafer W into the chamber **41**. For example, in a state where the support pins **31** are raised by driving of the lift driving unit **32** by a wafer lifting controller **112**, the control device **100** controls the transfer device A**3** so as to dispose the wafer W on the support pins **31**.

[0081] Next, the controller **102** of the control device **100** lowers the upper chamber **43** by driving the chamber driving unit **45**. Under the control of the controller **102**, the wafer lifting controller **112** lowers the support pins **31** by driving the lift driving unit **32** so that the wafer W supported by the support pins **31** is placed on the heating plate **21**. In this manner, the processing space S is formed within the chamber **41**, and the wafer W is placed on the placing surface **21***a*, and then, the heat treatment on the wafer W as a processing target is started.

[0082] While the heat treatment on the wafer W is performed, the controller **102** of the control device **100** controls the flow of a gas within the processing space S by operating the gas supply mechanism **60** and the exhaust mechanism **70**. Specifically, by the control of the control device **100**, a gas is supplied at a predetermined flow rate L**1** from the gas supply mechanism **60** into the processing space S through the gas ejecting unit **50**. Under the control of the control device **100**, the gas within the processing space S is discharged at a predetermined flow rate L**2** by the exhaust mechanism **70** from the exhaust holes **71** to the outside of the processing space S. Here, in the heat treatment unit U**8**, the amount of the gas supplied by the gas supply mechanism **60** and the amount of the gas discharged by the exhaust mechanism **70** are controlled such that L**1**<L**2**. Therefore, a gas corresponding to the difference (L**2**−L**1**) is supplied from the gas flow path **81** and the gas flow path **82** into the processing space S. Since the gas flow path **81** and the gas flow path **82** are connected to the outside of the processing space S, a gas in a predetermined amount (L**2**−L**1**) is supplied from the outside. Meanwhile, the gas flow path **82** is placed in a close state (is closed while the upper chamber **43** is abutted on the support ring **44**), or in a state where the flow path cross-sectional area is very small as compared to that in the gas flow path **81**. Thus, an amount of the gas supplied into the processing space S through the gas flow path **81** becomes sufficiently larger than an amount of the gas supplied into the processing space S through the gas flow path **82**. The control is performed such that a flow rate L**3** of the gas supplied from the gas flow path **81** becomes larger than the flow rate L**1** of the gas supplied from the gas ejecting unit **50**, that is, a relationship of L**3**>L**1** may be satisfied.

[0083] As described above, within the processing space S, the gas is supplied substantially uniformly at the flow rate L**1** from the gas ejecting unit **50** toward the surface of the wafer W. Meanwhile, since the flow rate L**2** of the gas evacuated from the exhaust holes **71** is larger than the flow rate L**1**, the gas corresponding to the difference is supplied from the outside into the processing space S through the gas flow path **81** (and the gas flow path **82**). Both the gas supplied to the surface of the wafer W from the gas ejecting unit **50** and the gas supplied from the outside through the gas flow path **81** (and the gas flow path **82**) are discharged to the outside from the exhaust holes **71** by the exhaust mechanism **70**. Thus, on the surface of the wafer W, the gas moves in the radial direction from the center of the wafer W toward the outer periphery. Around the wafer W, since the gas supplied from the gas flow path **81** into the processing space S moves to the exhaust holes **71**, an upward flow is formed. The gas that has moved in the radial direction along the wafer W also moves upwards in a state where the gas is included in the above-described upward flow, and is discharged from the exhaust holes **71**. Meanwhile, the "upward flow" refers to an upward flow of a gas.

[0084] Here, when a film formed on the surface of the wafer W that is being processed in the heat treatment unit U**8** is a film of a metal-containing resist, a sublimate including a metal component is generated from the surface of the wafer W during the heat treatment. This sublimate tends to adhere to a peripheral member (for example, the chamber **41**) having a lower temperature than the heating plate **21**. This sublimate includes a metal component, and thus may cause contamination of a device when adhering to, for example, the wall surface, the bottom surface, and the top surface of the heat treatment unit U**8**. A possibility that a performance degradation of a device may occur due to adhesion of the sublimate is also taken into consideration. Meanwhile, this sublimate may move together with a gas near the surface of the wafer W. Therefore, in order to suppress the scattering of the sublimate within the processing space S, it is required to control the movement of a gas that may include the sublimate on the surface of the wafer W such that the gas is not dispersed within the processing space S.

[0085] Meanwhile, the distribution of a gas on the surface of the wafer W affects the quality of a resist pattern on the wafer W, particularly, the uniformity of a line width CD. The dimension of a resist pattern using a metal-containing resist is affected by the moisture amount within the chamber **41** during the heat treatment. When the distribution of the moisture amount on one wafer W is biased, the amount of moisture that reacts within the film (reacting moisture amount) is also biased. Therefore, it is required that on the surface of the wafer W, a gas supplied to the gas ejecting unit **50** be homogeneous, and a difference in a reacting moisture amount between the center region and the outer periphery region of the wafer W be small during the heat treatment. The uniformity of the line width of the resist pattern on the surface of the wafer W is also related to the quality of, for example, a semiconductor product obtained from the wafer W. Therefore, it is required to control the movement of a gas on the wafer W such that the uniformity of the line width of the resist pattern may be improved.

[0086] In relation to the above-described point, in the heat treatment unit U**8**, the exhaust holes **71** are formed at the outer periphery of the wafer W, and the gas flow path **81** is also formed at the outer periphery of the wafer W in addition to the gas ejecting unit **50** from which a gas is supplied toward the surface of the wafer W. Accordingly, an upward flow is formed from the vicinity of the outer periphery edge of the wafer W toward the exhaust holes **71**. Here, a gas that is supplied from the gas ejecting unit **50** to the surface of the

wafer W and moves along the surface of the wafer W, which may include a sublimate, also moves together with the upward flow to the exhaust holes **71**. Therefore, it is possible to prevent the sublimate from adhering to, for example, a peripheral member on the periphery outside the upward flow. Meanwhile, when the exhaust holes **71** are configured to include a region located close to the wafer W and disposed outside the periphery edge of the wafer W when viewed from above, scattering of the sublimate may be further suppressed. Even when the exhaust holes **71** are formed at the outer periphery of the wafer W when viewed from above, if the exhaust holes **71** are located close to the side wall of the chamber (the side wall **43***b* of the upper chamber **43**), the upward flow is formed in the vicinity of the side wall of the chamber. In this case, it is thought that the possibility of scattering of the sublimate may increase. That is, in a configuration where the exhaust holes **71** are formed at a position close to the wafer W when viewed from above, scattering of the sublimate may be further suppressed.

[0087] Meanwhile, when the upward flow in the outer periphery of the wafer W flows in a state where adjustment has been made to some extent, it is thought that a gas on the surface of the wafer W easily smoothly flows to the exhaust holes **71**, in the vicinity of the outer periphery of the wafer W. For that purpose, it is considered that the flow velocity of a gas at the end portion **81***a* of the gas flow path **81** is increased to some extent, so that the flow velocity of the upward flow when the gas is introduced from the gas flow path **81** into the processing space S is increased to some extent. In the heat treatment unit U**8**, the support ring **44** functions as a rectifying unit in order to realize the above-described state.

[0088] Descriptions will be made on the shape of the end portion **81***a* of the gas flow path **81** due to arrangement of the support ring **44**, and the state of movement of a gas and a sublimate within the processing space S, with reference to FIGS. **7**A to **7**C and FIGS. **8**A and **8**B.

[0089] FIG. **7**A illustrates a simulation result of gas movement outside the wafer W within the processing space S. FIG. **7**B illustrates a simulation result of sublimate movement from the wafer W. FIG. **7**C is an enlarged view of the outside of the wafer W in FIG. **7**B. Meanwhile, in FIG. **7**B, a center line X is illustrated at a position corresponding to the center of the wafer W.

[0090] As illustrated in FIG. **7**A, outside the wafer W, a gas supplied from the gas flow path **81** changes its traveling direction from the vicinity of the end portion **81***a* of the gas flow path **81**, and then an upward flow F**1** that moves upwards is formed. The upward flow F**1** is formed because the volume of exhaust from the exhaust holes **71** is large. Meanwhile, a gas that moves along the surface of the wafer W in the radial direction toward the outer periphery merges with the upward flow F**1** and moves upwards. Meanwhile, when the gas flow path **82** is open (when gas supply from the gas flow path **82** may occur), as illustrated in FIG. **7**A, a gas supplied from the gas flow path **82** moves through the outer space S**1** and reaches the exhaust holes **71**. Therefore, when the gas is introduced from the gas flow path **82**, the gas flowing through the outer space S**1** forms a flow to such an extent that the upward flow F**1** is not interrupted and moves to the exhaust holes **71**.

[0091] As illustrated in FIG. **7**B, a sublimate from the surface of the wafer W is scattered above the wafer W. Meanwhile, in particular, as illustrated in FIG. **7**C, the sublimate is suppressed from being scattered toward the outer periphery of the wafer W. In this manner, within the processing space S, since the upward flow F**1** is formed, the gas moving above the wafer W is suppressed from moving to the outside of the upward flow F**1**. Thus, the sublimate may be suppressed from being scattered toward the outside.

[0092] FIGS. **8**A and **8**B illustrate a simulation result in a state where the inner periphery edge **44***b* of the support ring **44** is made close to the wafer W side as compared to the state illustrated in FIGS. **7**A to **7**C. FIG. **8**A illustrates a simulation result corresponding to FIG. **7**A, and FIG. **8**B illustrates a simulation result corresponding to FIG. **7**C.

[0093] In FIG. **8**A as well, as in FIG. **7**A, it can be found that outside the wafer W, a gas supplied from the gas flow path **81** changes its traveling direction from the vicinity of the end portion **81***a* of the gas flow path **81**, and then an upward flow F**2** that moves upwards is formed. Meanwhile, unlike in the example illustrated in FIG. **7**A, the upward flow F**2** is curved near the outer periphery edge of the wafer W and thus has a sharp curvature. It is thought that this is because the end portion **81***a* of the gas flow path **81** is closer to the wafer W than the example illustrated in FIG. **7**A, and thus, a gas course sharply changes due to a positional relationship with the exhaust holes **71**. Since a distance between the end portion **81***a* and the wafer W is closer, as illustrated in FIG. **8**B, a width W**2** of the flow path formed by the side surface of the wafer W and the support ring **44** is smaller than a width W**1** illustrated in FIG. **7**C. As a result, it is thought that in the example illustrated in FIG. **8**B, as compared to in the example illustrated in FIG. **7**C, when moving through this region, a gas is suppressed from spreading, and thus the upward flow F**2** with a narrower width is formed. These widths W**1** and W**2** correspond to the flow path areas at the corresponding position.

[0094] In this manner, as a result of formation of the upward flow F**2** near the edge of the wafer W, in the example illustrated in FIGS. **8**A and **8**B, a sublimate is further suppressed from being scattered in the vicinity of the surface of the wafer W. This may be confirmed by comparing FIG. **8**B to FIG. **7**C. In the example illustrated in FIG. **8**B, it is confirmed that a sublimate that moves downwards from the edge of the wafer W along the outer periphery wall of the wafer W is reduced as compared to that in FIG. **7**C. As described above, when the upward flow F**2** that is strong to some extent is formed near the edge of the wafer W, the sublimate may also be prevented from falling from the edge of the wafer W.

[0095] In this manner, the effect of suppressing scattering of a sublimate by an upward flow may be changed depending on how much gas is supplied from the gas flow path **81** to form the upward flow.

[0096] Meanwhile, as described above, the distribution of a gas on the surface of the wafer W affects the quality of a resist pattern on the wafer W. Therefore, it is required to control the movement of the gas on the wafer W such that the uniformity of a line width of the resist pattern may not be deteriorated due to unevenness of a gas flow on the surface of the wafer W. Accordingly, the gas ejecting unit **50** that has the ejecting holes **51** scattered along the surface facing the wafer W on the heating plate **21** may be used so that a variation depending on the supply of the gas toward the surface of the wafer W may be reduced. Meanwhile, if the flow rate of the gas toward the exhaust holes **71** becomes excessively large, the gas supplied to the wafer W moves too

fast. This may affect the quality of the resist pattern. Therefore, it is possible to employ a mode in which the movement of the gas on the wafer W is controlled within a range where the uniformity of the line width of the resist pattern is maintained.

[0097] The ratio of the amount of a gas supplied from the gas ejecting unit **50** to the amount of a gas introduced from the gas flow path **81** and the gas flow path **82** (the sum of introduction amounts from the two flow paths) may range from, for example, 1:6 to 1:2. The ratio of the amount of the gas introduced from the gas flow path **82**, to the amount of the gas introduced from the gas flow path **81** and the gas flow path **82** (the sum of introduction amounts from the two flow paths) may be, for example, 30% or less. By controlling the movement of the gas from each unit such that the above-described ranges are satisfied, it is possible to suppress scattering of a sublimate through formation of an upward flow, and to enhance the uniformity of a line width of a resist pattern on the wafer W.

[Action]

[0098] As described above, according to the above-described heat treatment device (the heat treatment unit U**8**) and the heat treatment method, a processing gas is ejected from the gas ejecting unit **50** toward the surface of the wafer W, so that the heat treatment of the wafer W is facilitated. Meanwhile, in the heat treatment unit U**8**, by the gas flow path **81**, and the exhaust mechanism **70** that evacuates the inside of the chamber from the exhaust holes **71**, a gas flowing between these forms an upward flow around the substrate. Thus, the movement of a sublimate generated from the wafer W during the heat treatment is blocked by the upward flow. Therefore, it is possible to suppress scattering of the sublimate from the film on the substrate.

[0099] As described above, when a metal-containing resist is used, since a sublimate from a film contains a metal component, influence by adhesion to each unit within the device may be large. In such a case, by employing the above-described configuration, it is possible to suppress the scattering of the sublimate that contains the metal component from the film on the substrate. Therefore, it is possible to effectively reduce the influence by adhesion of the sublimate to the device.

[0100] As described above, a gas is supplied from the periphery outside the wafer W into the chamber, and thus it is possible to form an upward flow in which the air flow is further strengthened, around the wafer W.

[0101] When the gas supply unit includes the gas flow path **81** connected to the inside of the chamber, and the support ring **44** as a rectifying unit that controls a flow path area at the end portion **81***a* of the gas flow path **81** on the chamber **41** side, the flow path area may be controlled by these. Therefore, for example, it is also possible to control an upward flow such that it is possible to further suppress the scattering of a sublimate. It is also possible to control the upward flow in consideration of the quality of a resist pattern on the wafer W.

[0102] As described above, it is possible to employ a configuration in which the outer space S**1** is formed outside the exhaust holes **71** of the exhaust mechanism **70** as the exhaust unit, in the radial direction of the wafer W, and a gas is also supplied from the gas flow path **82** as the second gas supply unit connected to the outer space S**1**. In this case, the gas that is supplied from the gas flow path **82** and moves in the outer space S**1** also moves toward the exhaust holes **71**, and thus, the disturbance of an upward flow may be prevented, and the scattering of a sublimate may be suppressed. Here, when the gas flow path **82** is connected to the outer space S**1** on the support ring **44** side, that is, from below, for example, the gas may be prevented from staying in the outer space and the vicinity thereof.

[0103] As described above, when the gas flow path **81** is capable of transferring heat from the heating plate **21**, a gas that moves through the gas flow path **81** may be supplied into the chamber in a state where the gas is heated by the heat from the heating plate. Therefore, it is possible to suppress, for example, temperature fluctuation within the chamber **41** due to supplying of the gas from the gas flow path **81**.

[0104] As in the gas ejecting unit **50**, when the ejecting holes **51** scattered along the surface facing the wafer W on the heating plate **21** are included, since a processing gas may be more uniformly ejected toward the surface of the wafer W, the quality of a resist pattern may be enhanced.

Second Embodiment

[0105] Next, a heat treatment device according to a second embodiment (a heat treatment unit U**8**A) will be described. FIG. **9** is a view illustrating an example of the heat treatment unit U**8**A according to the second embodiment. As illustrated in FIG. **9**, the heat treatment unit USA includes the heating mechanism **20**, the wafer lifting mechanism **30** (lifting unit), the accommodating mechanism **40**, the gas supply mechanism **60** (gas supply unit), and the exhaust mechanism **70** (exhaust unit). This is the same as the heat treatment unit U**8** according to the first embodiment. The configuration of the gas flow paths **81** and **82** is also the same as that in the heat treatment unit U**8**. The heat treatment unit USA is different from the heat treatment unit U**8** in the arrangement of the exhaust mechanism **70**.

[0106] In the heat treatment unit USA, the exhaust hole **71** of the exhaust mechanism **70** (exhaust unit) is formed inside the periphery edge of the opposing surface **50***a* of the gas ejecting unit **50** facing the wafer W. In the example illustrated in FIG. **9**, the exhaust hole **71** is formed near the center of the opposing surface **50***a*. In FIG. **9**, a plurality (two) of exhaust holes **71** is illustrated, but a configuration in which one exhaust hole **71** is formed at the center may be employed. When the plurality of exhaust holes **71** is formed, the ejecting holes **51** may be formed on the center side of the exhaust holes **71**. At that time, the ejecting holes **51** may be formed with the same size or distribution density as those in the portion outside the exhaust holes **71**. In the example illustrated in FIG. **9**, the exhaust holes **71** and the gas supply path **61** of the gas supply mechanism **60** have a double structure, but the structure of this portion is not particularly limited.

[0107] In the heat treatment unit USA as well, the control of a gas flow by the controller **102** of the control device **100** is the same as that in the heat treatment unit U**8**. That is, while the heat treatment on the wafer W is performed, the controller **102** operates the gas supply mechanism **60** and the exhaust mechanism **70**, so that a gas is supplied at a predetermined flow rate L**1** from the gas supply mechanism **60** into the processing space S through the gas ejecting unit **50**. Under the control of the control device **100**, the gas within the processing space S is discharged at a predetermined flow rate L**2** by the exhaust mechanism **70** from the

exhaust holes **71** to the outside of the processing space S. Here, the amount of the gas supplied by the gas supply mechanism **60** and the amount of the gas discharged by the exhaust mechanism **70** are controlled such that the relationship between flow rates satisfies L**1**<L**2**. Therefore, a gas corresponding to the difference (L**2**−L**1**) is supplied from the gas flow path **81** and the gas flow path **82** into the processing space S. The gas flow path **82** is placed in a close state (is closed while the upper chamber **43** is abutted on the support ring **44**), or in a state where the flow path cross-sectional area is very small as compared to that in the gas flow path **81**. Thus, an amount of the gas supplied into the processing space S through the gas flow path **81** becomes sufficiently larger than an amount of the gas supplied into the processing space S through the gas flow path **82**. The control is performed such that a flow rate L**3** of the gas supplied from the gas flow path **81** becomes larger than the flow rate L**1** of the gas supplied from the gas ejecting unit **50**, that is, a relationship of L**3**>L**1** may be satisfied.

[0108] When the gas flow rate is controlled as described above, the gas supplied from the gas flow path **81** changes its traveling direction from the vicinity of the end portion **81***a* of the gas flow path **81**, and then an upward flow F**3** that moves upwards while moving in a direction toward the center of the wafer W (toward the formed exhaust holes **71**) is formed. The upward flow F**3** is formed because the volume of exhaust from the exhaust holes **71** is large. Meanwhile, unlike the upward flows F**1** and F**2** described in the first embodiment, the upward flow F**3** becomes a gas flow toward the inner periphery side of the wafer W.

[0109] When the exhaust holes **71** are formed inside the periphery edge of the opposing surface **50***a* of the gas ejecting unit **50** facing the wafer W, the gas introduced from the end portion **81***a* of the gas flow path **81** moves toward the exhaust holes **71** formed inside the outer periphery of the wafer W. Therefore, a sublimate generated from the wafer W during the heat treatment moves toward the exhaust holes **71** together with the upward flow F**3**.

[0110] As described above, in the heat treatment device (the heat treatment unit U**8**A) as well, a processing gas is ejected from the gas ejecting unit **50** toward the surface of the wafer W so that the heat treatment of the wafer W is facilitated. Meanwhile, in the heat treatment unit U**8**, by the gas flow path **81**, and the exhaust mechanism **70** that evacuates the inside of the chamber from the exhaust holes **71**, a gas flowing between these forms an upward flow around the substrate. Thus, the movement of a sublimate generated from the wafer W during the heat treatment is blocked by the upward flow. Therefore, it is possible to suppress scattering of the sublimate from the film on the substrate.

[0111] As illustrated in FIG. **9**, when the exhaust holes **71** are formed inside the periphery edge of (the opposing surface **50***a* of) the gas ejecting unit **50**, the upward flow F**3** is formed toward the inside of the wafer W. In this case, in particular, it is possible to prevent the sublimate from adhering to the outside of the periphery edge of the wafer W, in the lower portion within the processing space S (for example, the surface of the heating plate **21**, and the inner periphery edge **44***b* of the support ring **44**). It is thought that this is because through a configuration where the upward flow F**3** is toward the inside of the wafer W, the flow of the gas that moves to the outside of the periphery edge of the wafer W may be further suppressed as compared to that in the configuration example described in the first embodiment. Therefore, it can be said that, in particular, in order to prevent the sublimate from adhering to the lower portion within the processing space S, it is advantageous to employ a configuration where the exhaust holes **71** are disposed inside the periphery edge of (the opposing surface **50***a* of) the gas ejecting unit **50**.

[0112] Meanwhile, the arrangement of the exhaust holes **71** inside the periphery edge of (the opposing surface **50***a* of) the gas ejecting unit **50** is not particularly limited. However, in order to substantially uniformly suppress the flow of the gas toward the outside of the periphery edge of the wafer W over the entire circumference of the wafer W, arrangement of the exhaust holes **71** near the center of (the opposing surface **50***a* of) the gas ejecting unit **50** is considered. The exhaust holes **71** may be arranged such that no significant variation occurs in distances between the gas flow paths **81** and **82** formed at the outer periphery of the wafer W and the exhaust holes **71**, and thus it is possible to suppress the sublimate from scattering to the surroundings in the entire circumference of the wafer W.

[Others]

[0113] Although various embodiments have been described as described above, the present disclosure is not limited to the above-described embodiments, and various omissions, substitutions, and changes may be made. Elements in different embodiments may be combined to form other embodiments.

[0114] For example, the configuration of the gas flow paths **81** and **82** which supply a gas to the heat treatment unit U**8** is not limited to the above-described embodiments. For example, the gas flow path **81** may be properly changed in a range where the outlet on the chamber **41** side is disposed below the surface of the wafer W. In the above, the gas flow path **81** has a region extending in the horizontal direction along the surface of the heating plate **21**, but, for example, the gas flow path **81** may be formed through the heating plate **21**.

[0115] In the above, although a case where the outer space S**1** is formed has been described, the outer space S**1** may not be formed. In this case, it is possible to employ a configuration where the shape of the upper chamber **43** is changed to a shape in which the outer space S**1** is not present, and the upper chamber **43** also has a function of the support ring **44** as a rectifying unit.

[0116] According to the present disclosure, there is provided a technology of suppressing scattering of a sublimate from the film on the substrate.

[0117] From the foregoing, it will be appreciated that various embodiments of the present disclosure have been described herein for purposes of illustration, and that various modifications may be made without departing from the scope and spirit of the present disclosure. Accordingly, the various embodiments disclosed herein are not intended to be limiting, with the true scope and spirit being indicated by the following claims.

What is claimed is:

1. A heat treatment apparatus comprising:

a heating plate that supports and heat a substrate on which a metal containing resist film is formed;

a chamber that covers a processing space above the heating plate;

a gas supply that supplies a gas into the chamber along a gas flow path connected to an inside of the chamber, the gas flow path being directed toward the substrate; and

an exhaust port that evacuates inside of the chamber.

2. The heat treatment apparatus according to claim **1**, wherein the gas is a moisture-containing gas.

3. The heat treatment apparatus according to claim **1**, wherein the gas is a inert gas.

4. The heat treatment apparatus according to claim **1**, wherein the gas has a low oxygen concentration.

5. The heat treatment apparatus according to claim **1**, wherein the gas is inert gas having a low oxygen concentration.

6. The heat treatment apparatus according to claim **1**, wherein the exhaust port is formed outside the outer periphery of the substrate.

7. The heat treatment apparatus according to claim **6**, wherein the exhaust port is formed at a position where a part of the exhaust port overlaps the substrate when viewed from the top.

8. The heat treatment apparatus according to claim **1**, wherein the gas supply includes a gas supply port which is formed at a position facing the substrate.

9. The heat treatment apparatus according to claim **8**, wherein the exhaust port is formed outside the gas supply port.

10. The heat treatment apparatus according to claim **1**, wherein the gas supply includes a gas supply port which is formed on the outer periphery side around the substrate.

11. The heat treatment apparatus according to claim **1**, wherein the metal containing resist film is a tin-containing resist firm.

12. The heat treatment apparatus according to claim **1**, wherein a heat treatment is performed before the film is subjected to a development processing.

13. The heat treatment apparatus according to claim **1**, wherein a heat treatment is performed after the film is subjected to a development processing.

14. The heat treatment apparatus according to claim **1**, wherein the gas supply includes a plurality of gas supply sources.

15. The heat treatment apparatus according to claim **1**, wherein the gas is dry air.

16. The heat treatment apparatus according to claim **1**, wherein the gas is supplied from below a surface of the substrate.

* * * * *