US 20250282060A1

(19) United States

(12) Patent Application Publication

Jansen-Troy et al.

(10) Pub. No.: US 2025/0282060 A1

(43) Pub. Date: Sep. 11, 2025

(54) **HANDLING SYSTEM FOR STERILE GOODS CONTAINERS AND METHOD FOR MACHINE HANDLING OF STERILE GOODS CONTAINERS**

(71) Applicant: **Aesculap AG**, Tuttlingen (DE)

(72) Inventors: **Arne Jansen-Troy**, Stockach (DE); **Allan Maas**, Konstanz (DE); **Daniel Kiessling**, Villingen-Schwenningen (DE); **Matthias Henke**, Villingen-Schwenningen (DE)

(21) Appl. No.: **19/220,537**

(22) Filed: **May 28, 2025**

Related U.S. Application Data

(63) Continuation of application No. PCT/EP2023/083315, filed on Nov. 28, 2023.

(30) **Foreign Application Priority Data**

Nov. 29, 2022 (DE) 10 2022 131 591.6

Publication Classification

(51) **Int. Cl.**

B25J 15/00 (2006.01)

B66C 1/66 (2006.01)

(52) **U.S. Cl.**

CPC ***B25J 15/0033*** (2013.01); ***B25J 15/0047*** (2013.01); ***B66C 1/663*** (2013.01)

(57) **ABSTRACT**

A handling system for sterile goods containers, in particular for automatically opening sterile goods containers, includes at least one tool apparatus for opening sterile goods containers. The at least one tool apparatus has at least one first tool element for being brought into engagement with a locking bracket mounted on a sterile goods container lid of a sterile goods container so as to be pivotable about a pivot axis, and in a storage position is oriented in parallel or substantially in parallel with a lid top side of the sterile goods container lid for locking the sterile goods container lid on a sterile goods container tray of the sterile goods container in a closing position. The first tool element has a lifting wedge for engaging under the locking bracket. The handling system can be used in a method for machine handling of sterile goods containers.

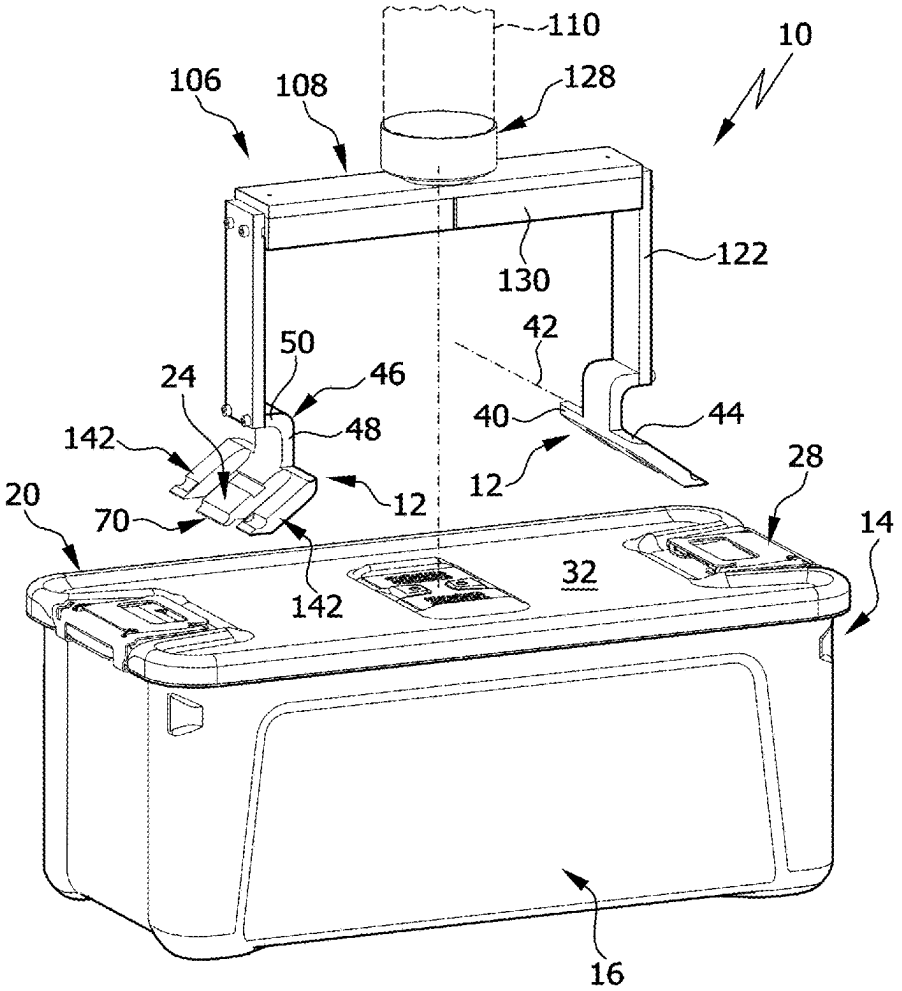

FIG.1

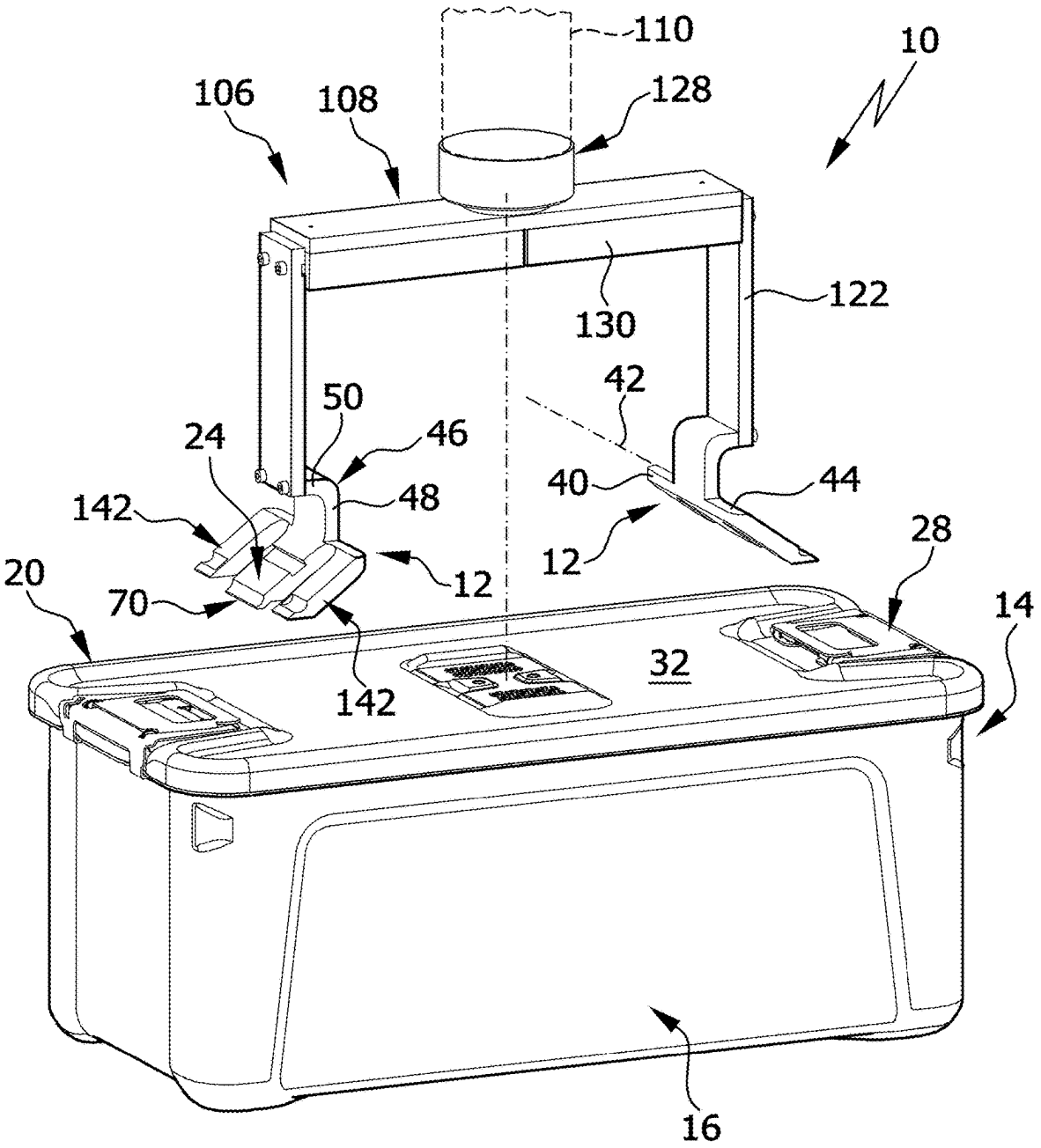
110
10
106
108
128
130
122
42
50
46
24
40
44
142
48
12
12
28
20
70
14
32
142
16

FIG.2

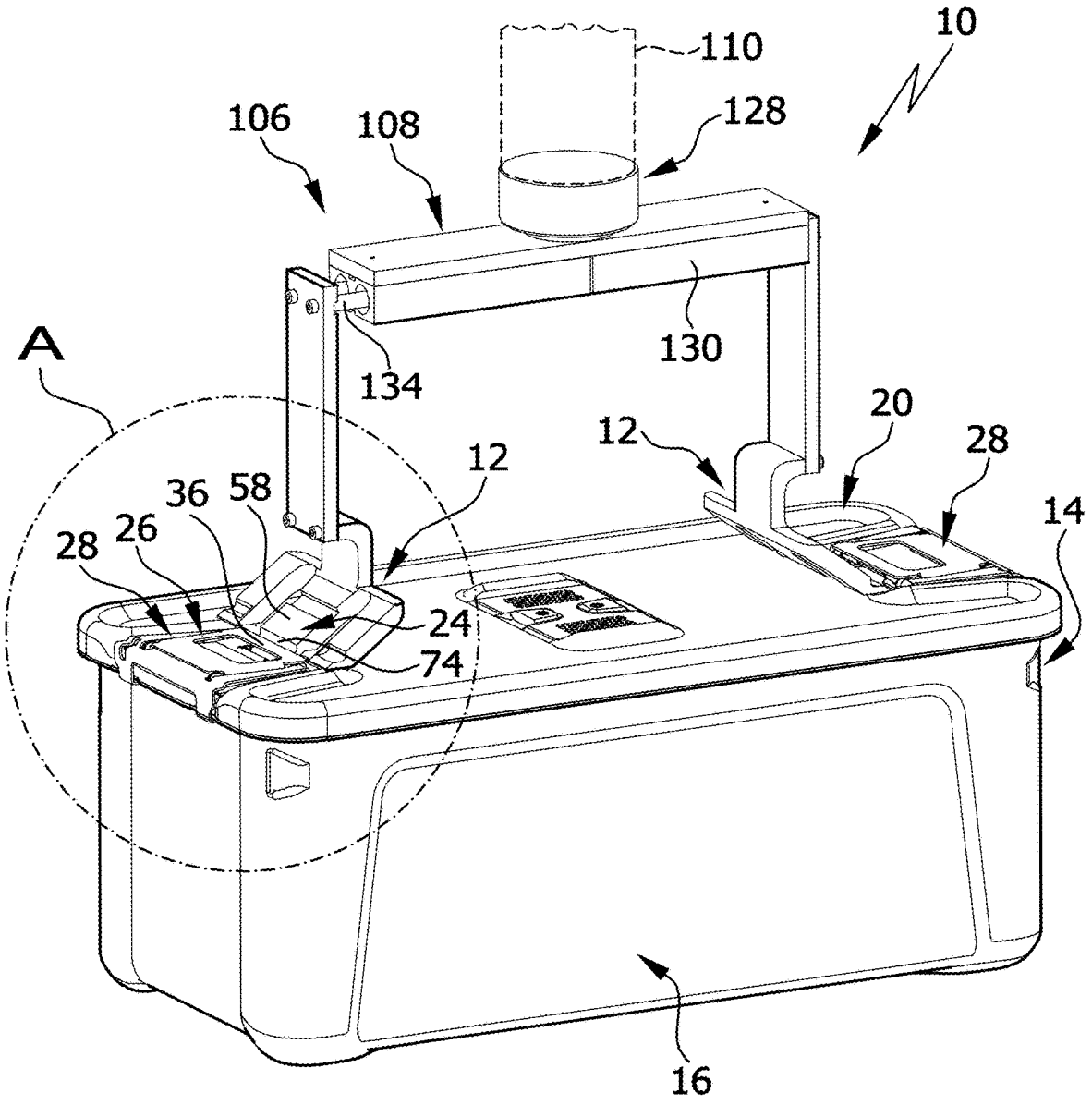

FIG.3

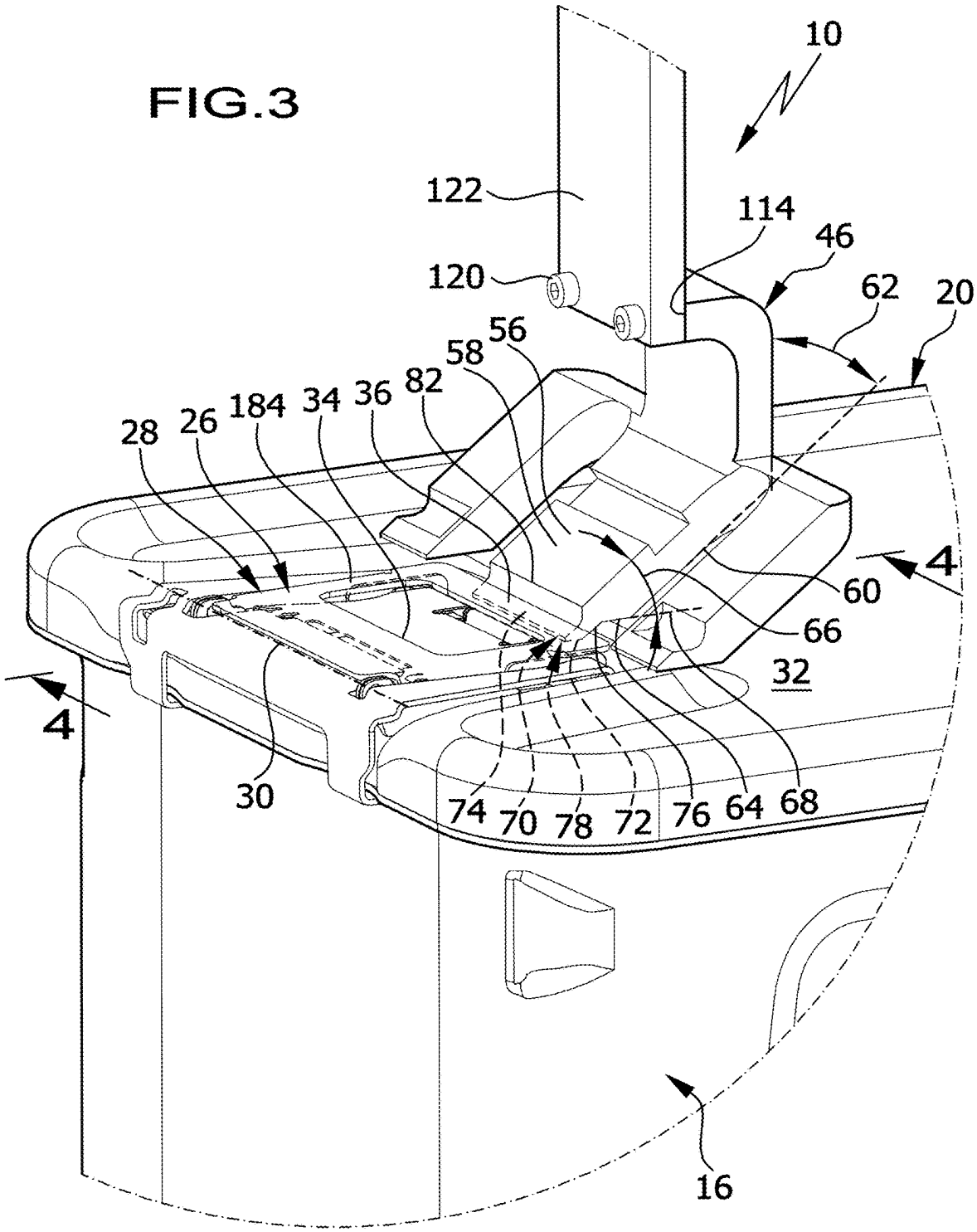
10
122
114
46
120
62
20
56
58
82
36
34
184
26
28
4
60
66
32
4
30
74
70
78
72
76
64
68
16

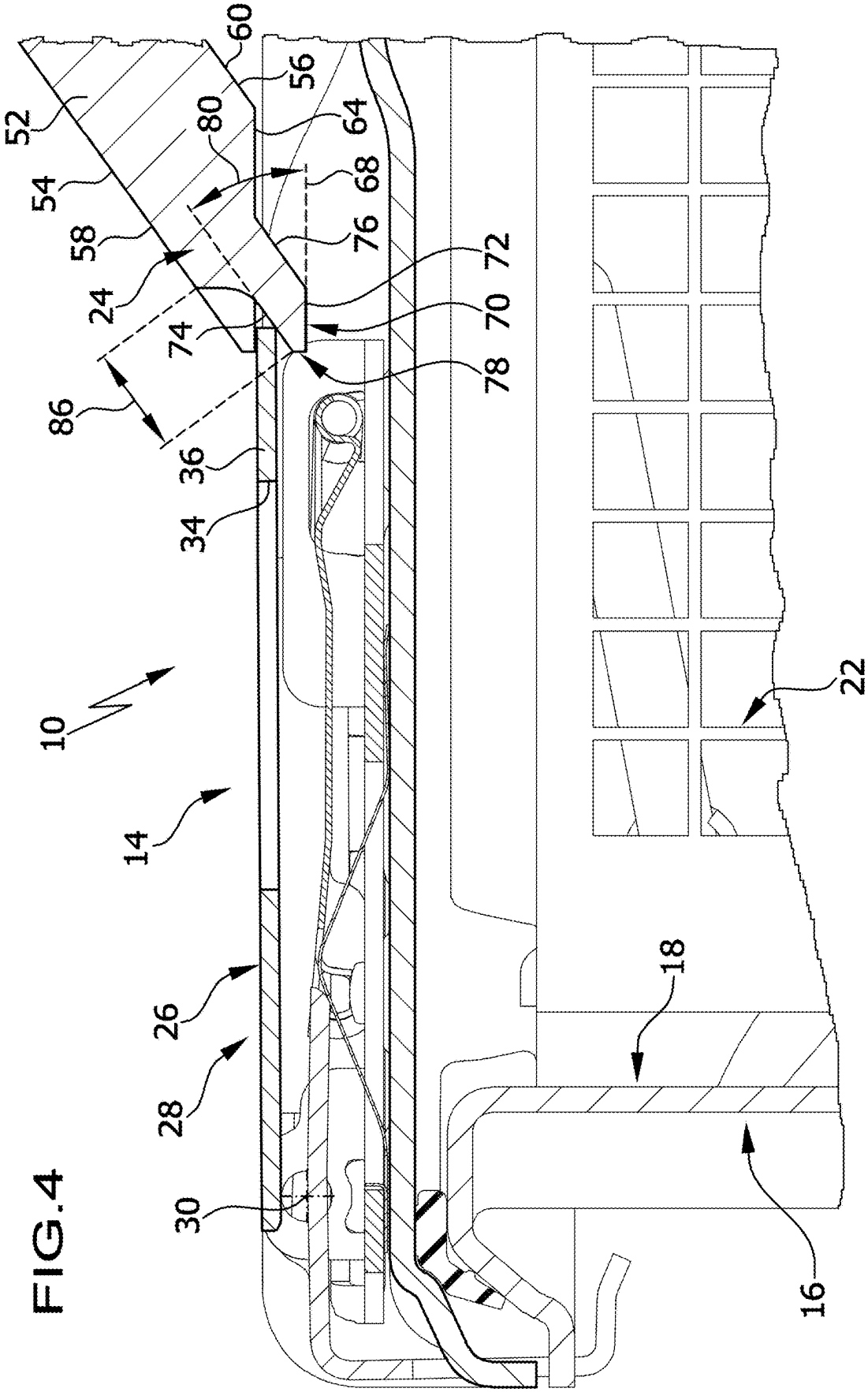
60
52
56
80
64
54
68
58
76
24
72
74
70
86
78
36
34
10
22
14
18
26
28
30
16

FIG.4

FIG.5

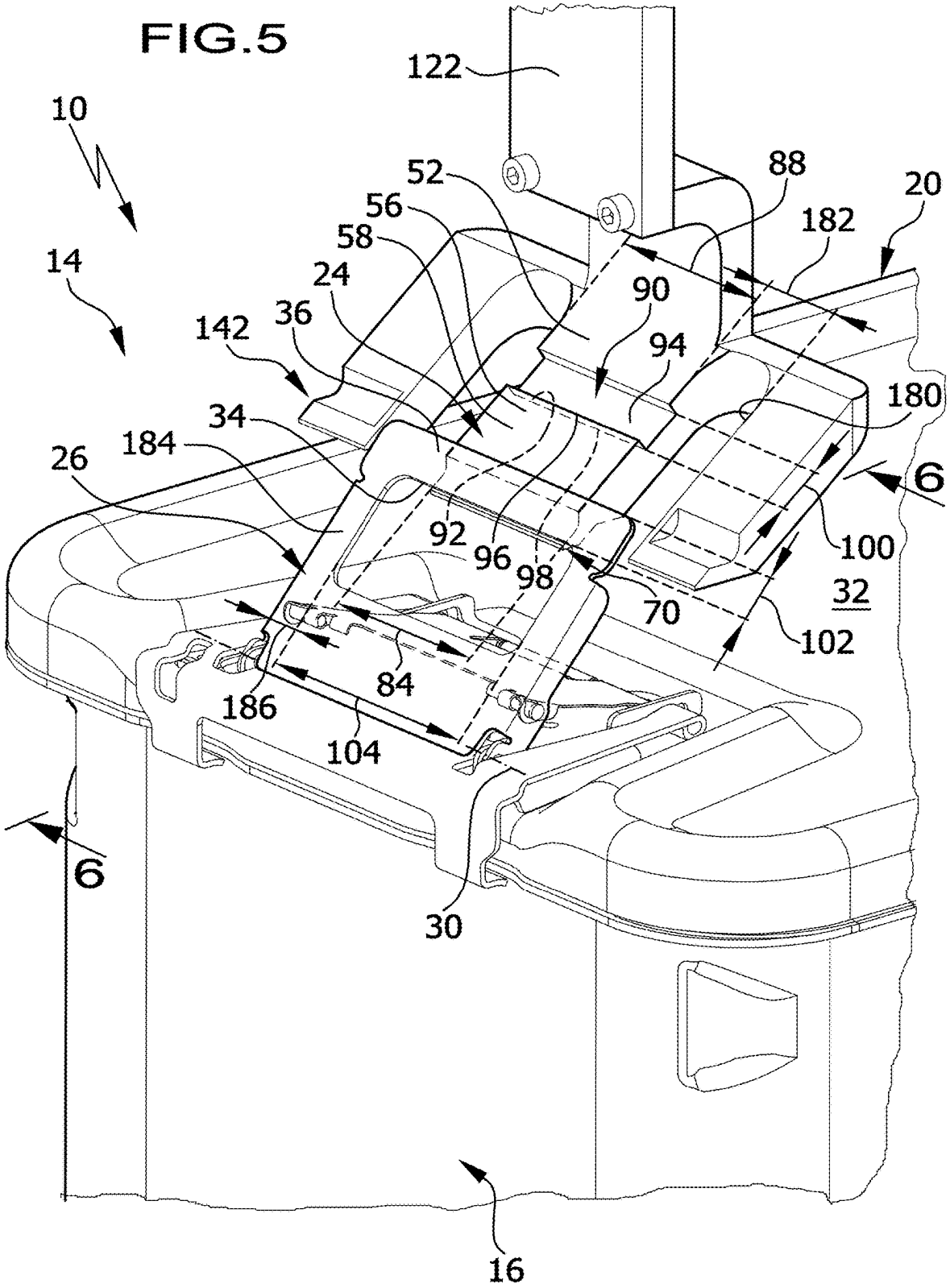
122
10
52
88
20
56
182
58
14
24
90
142
36
94
180
34
184
26
6
92
96
100
98
32
70
102
84
186
104
6
30
16

FIG.6

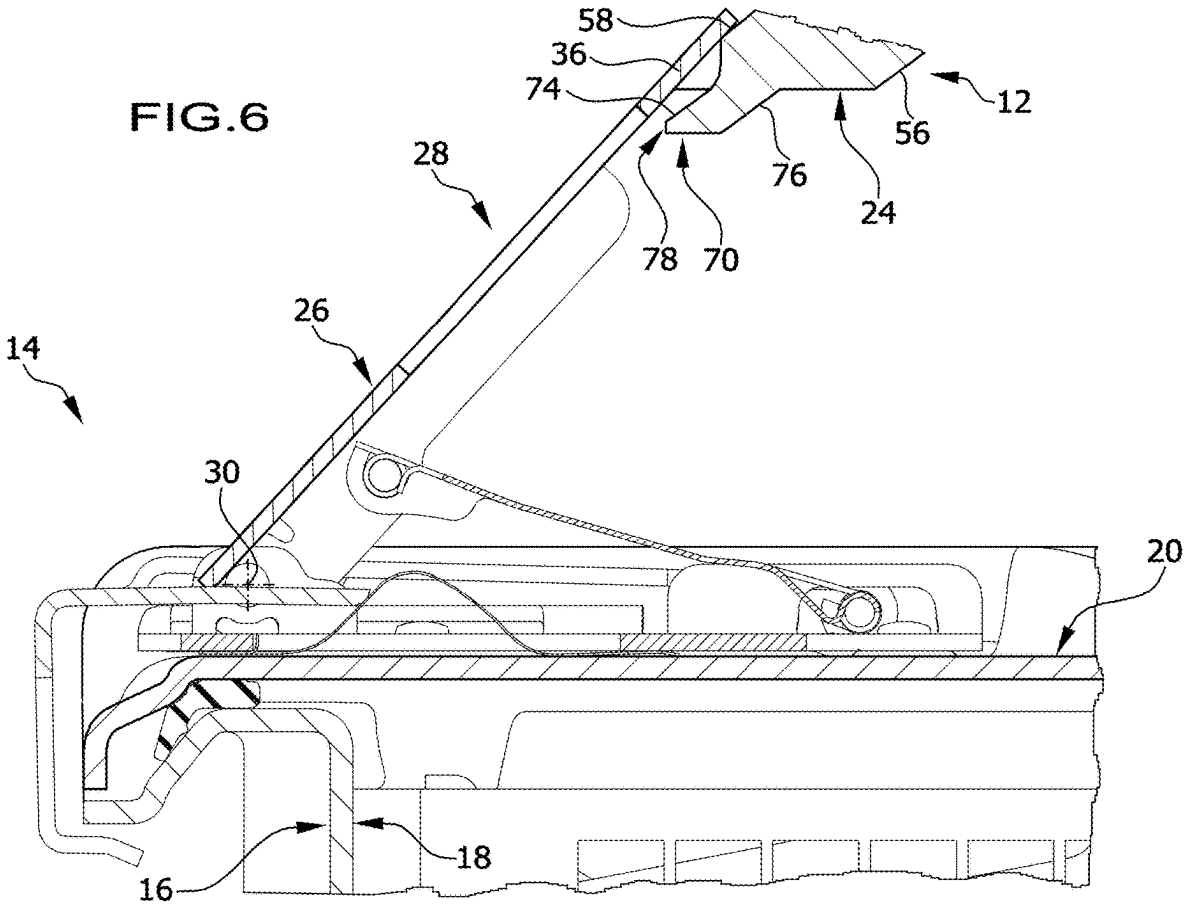

FIG.7

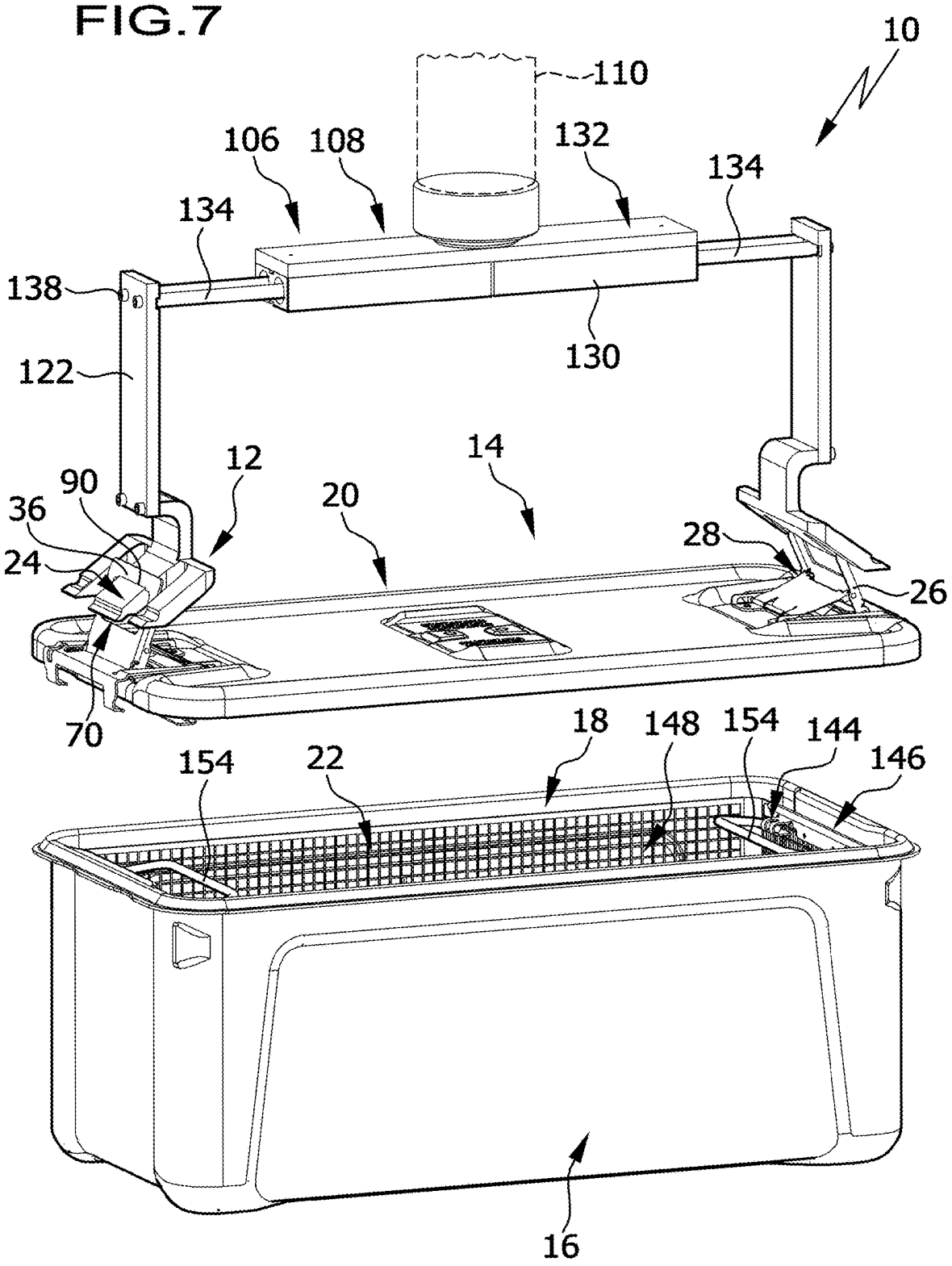
10
110
106
108
132
134
134
138
130
122
12
14
90
36
20
24
28
26
70
18
148
154
144
154
22
146
16

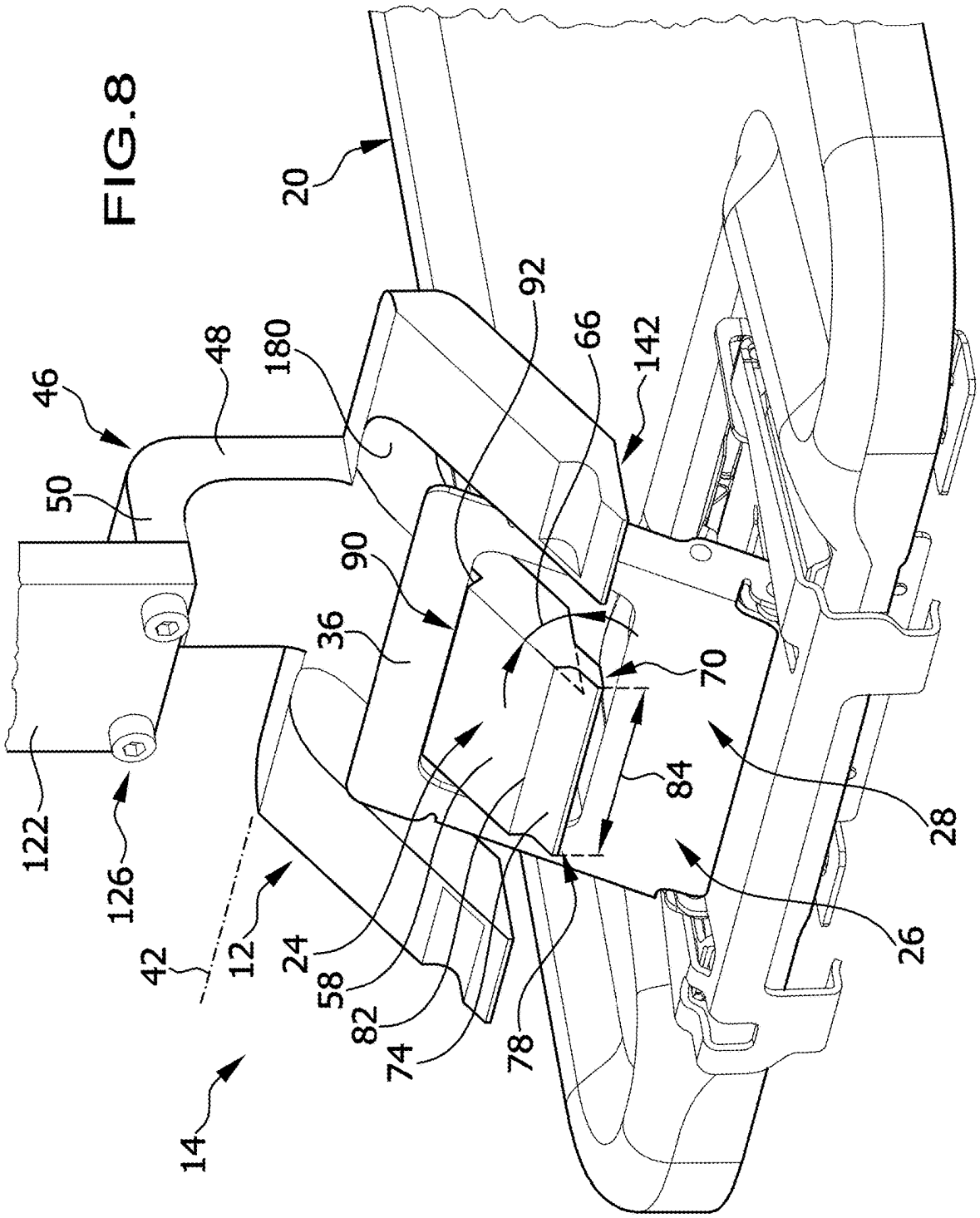
20
92
66
142
46
48
180
50
90
36
70
122
126
84
28
42
12
24
58
82
74
78
26
14

FIG.8

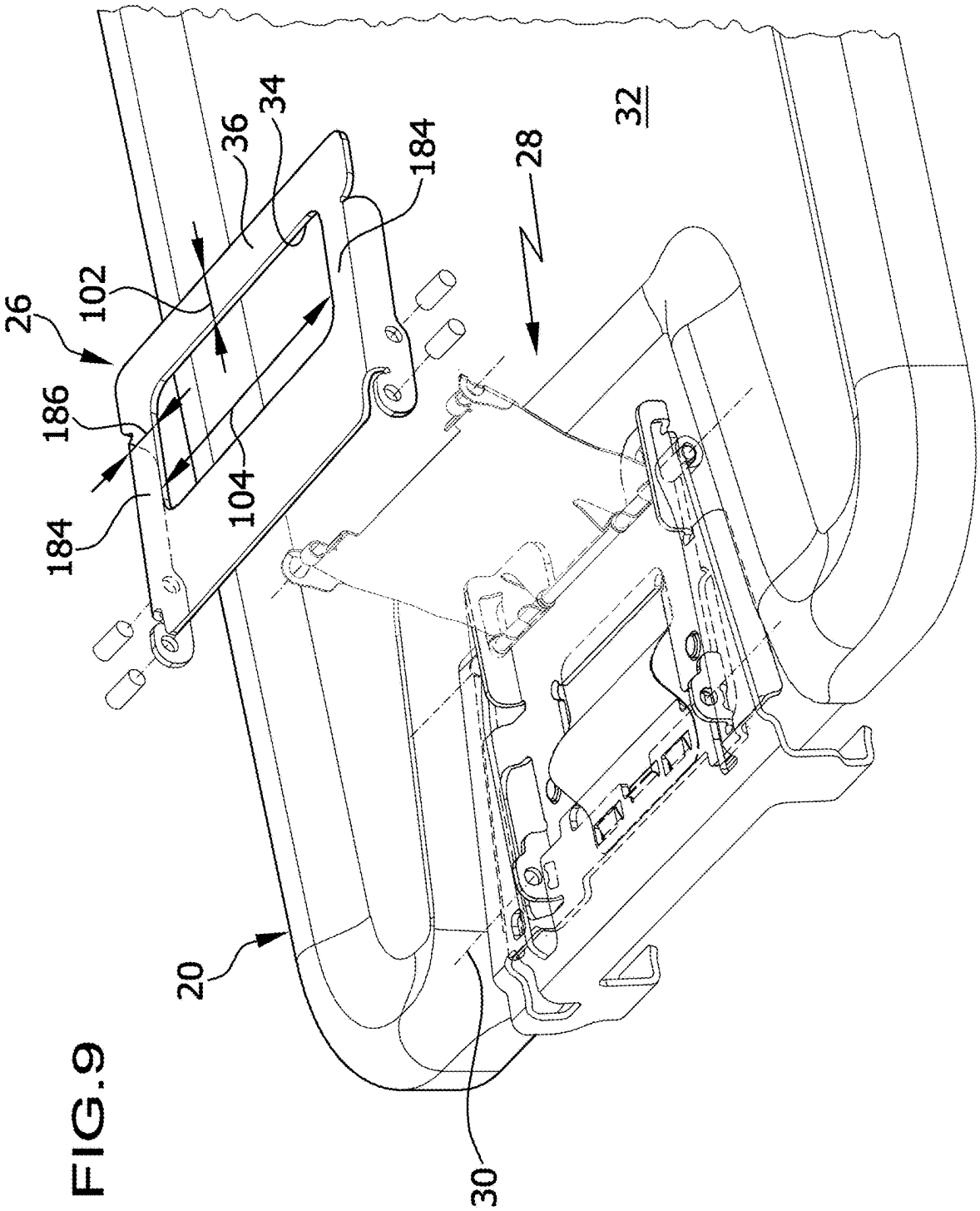

FIG.9

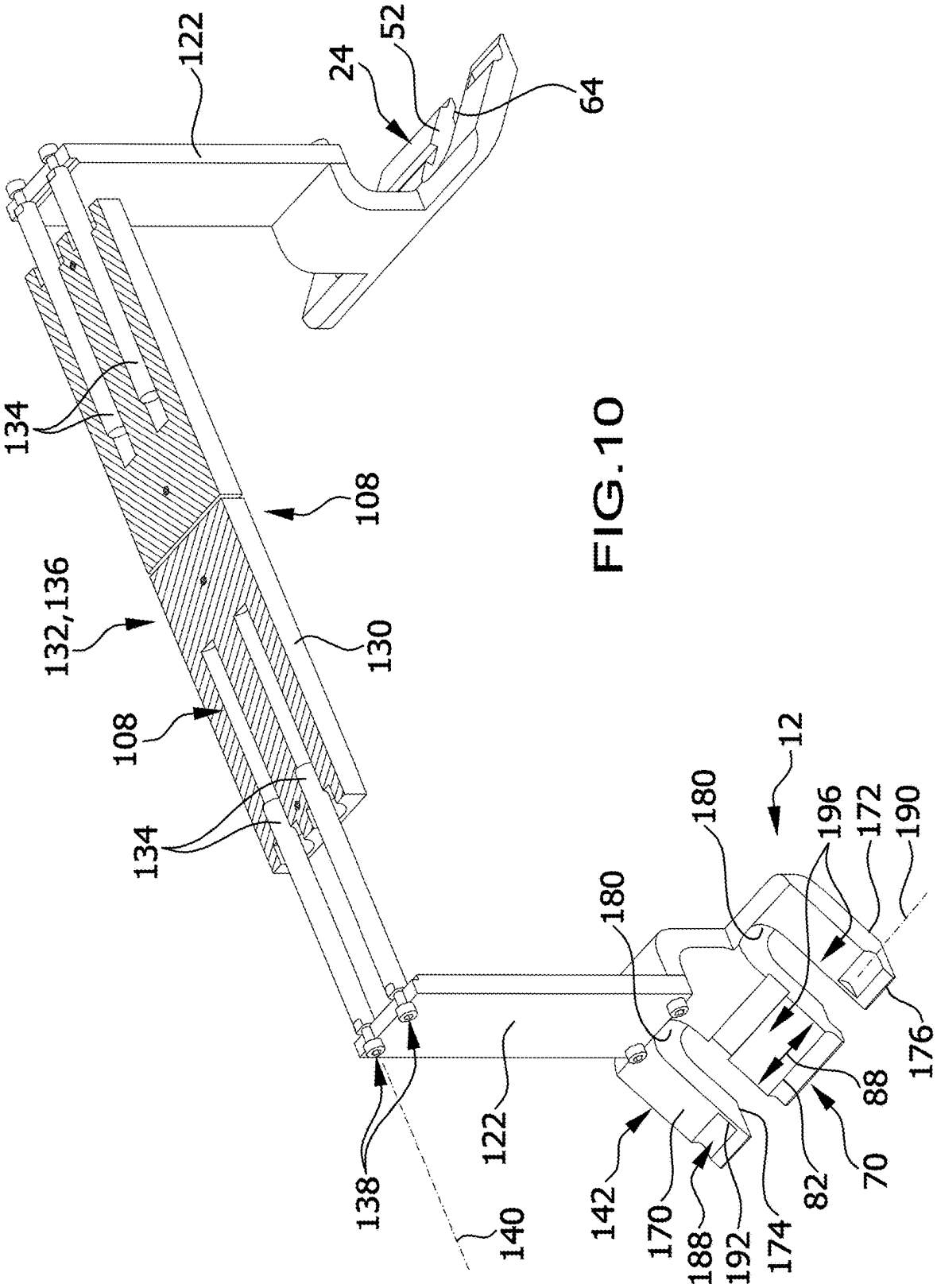
122
24
52
64
134
108
132,136
130
108
134
12
180
180
196
172
190
176
88
70
82
174
192
188
170
142
122
138
140

FIG. 10

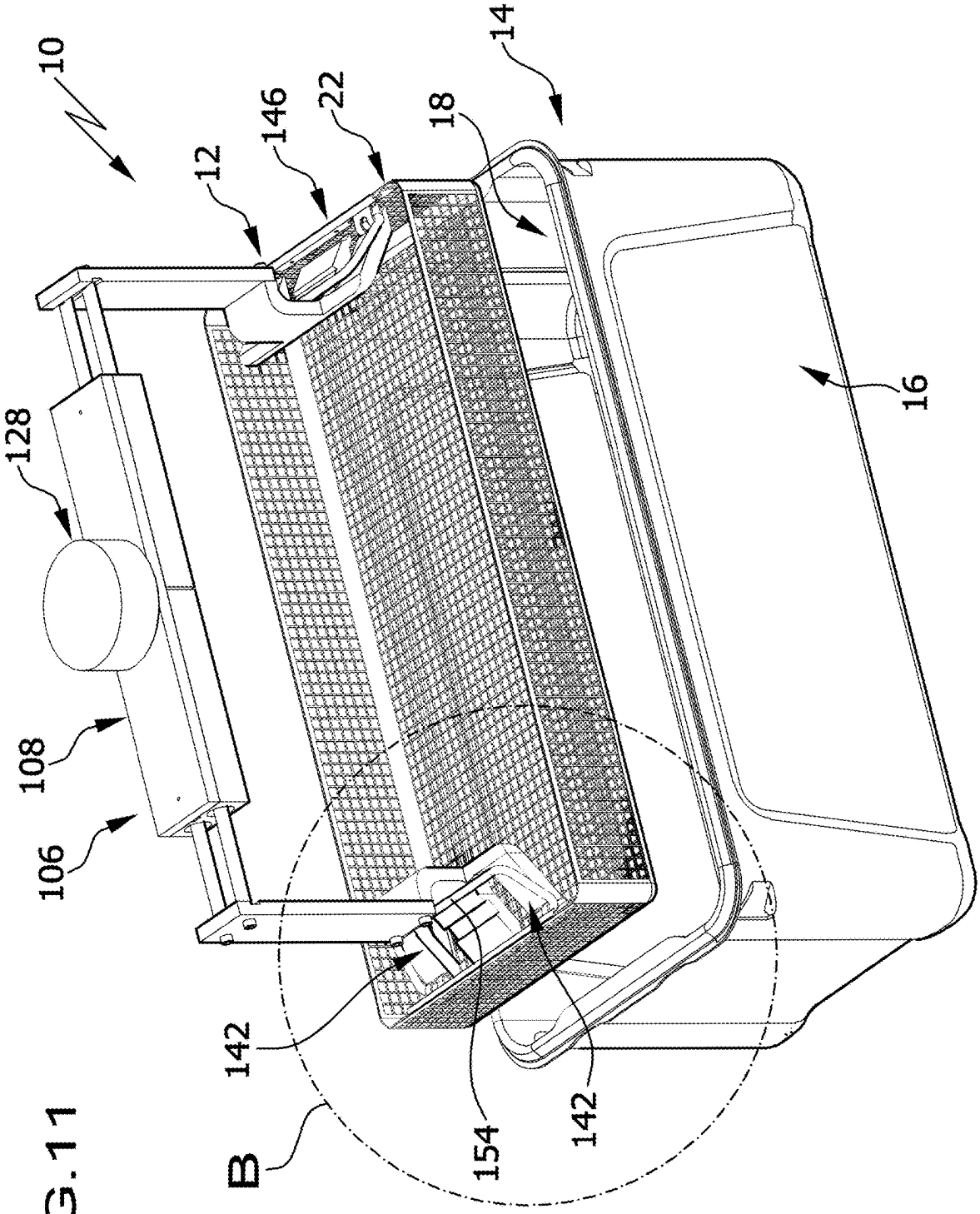

FIG.11

FIG.12

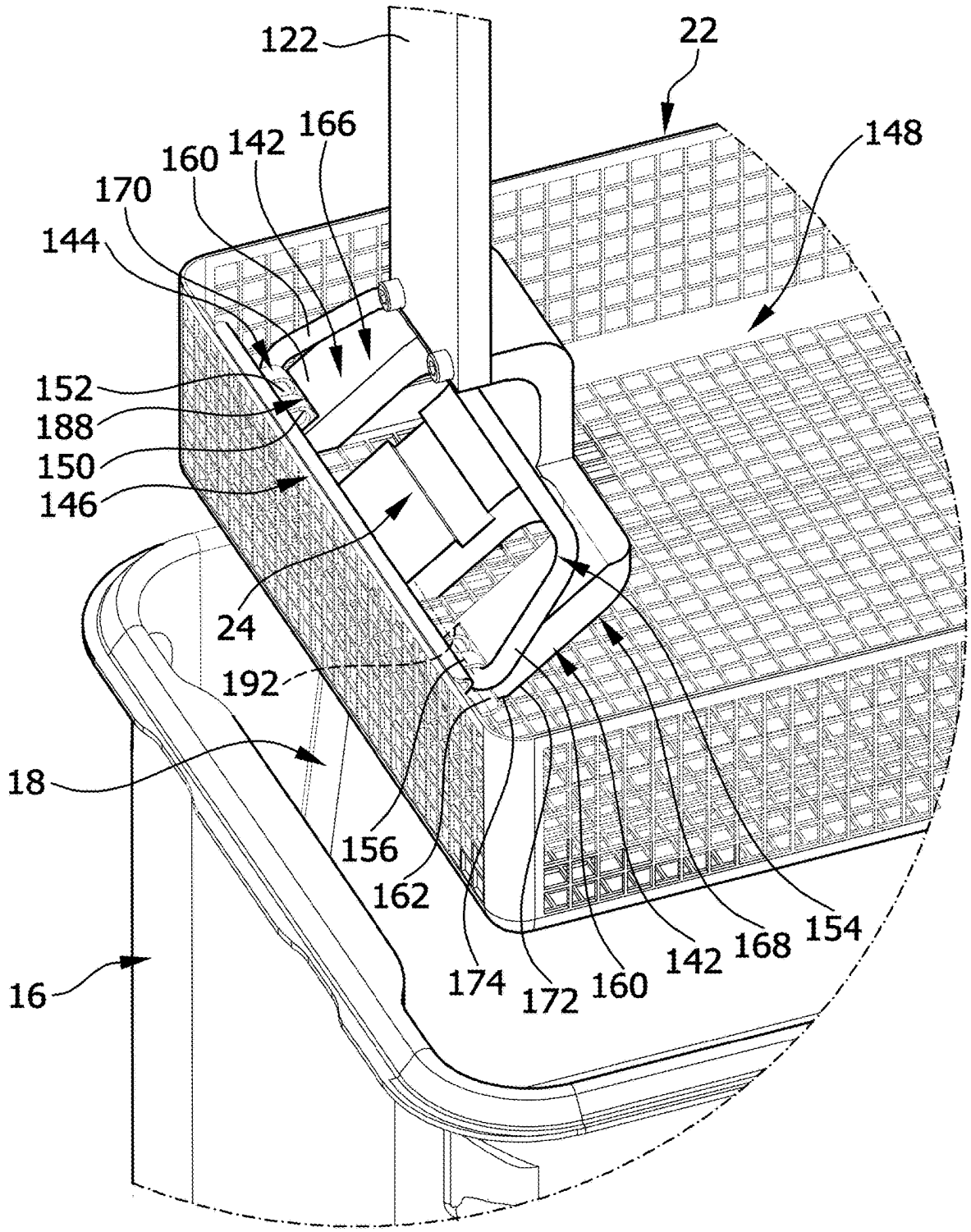
122
22
148
166
142
160
170
144
152
188
150
146
24
192
18
156
162
174
172
160
142
168
154
16

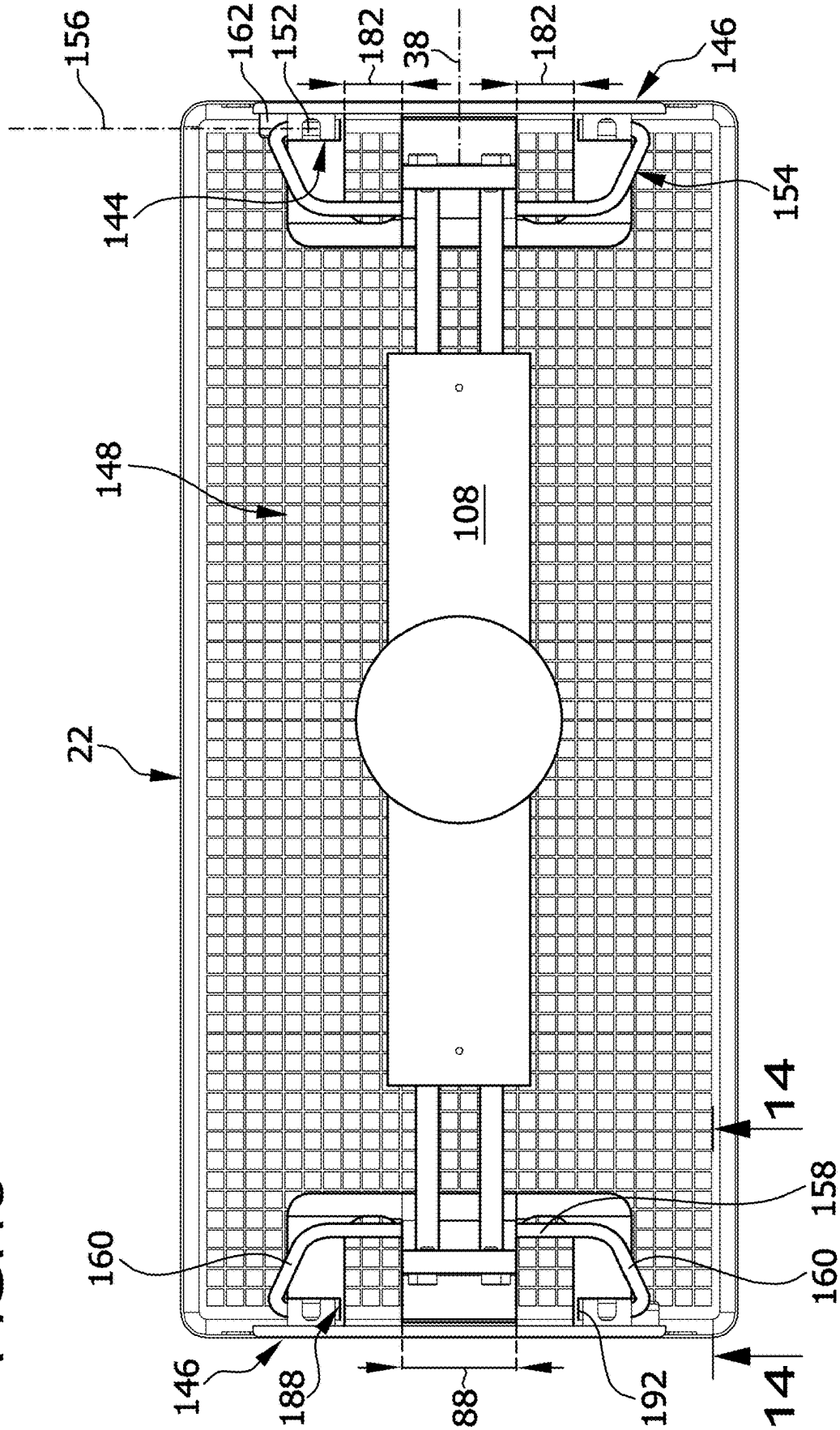
156
162
152
182
38
182
146
144
154
148
108
22
14
158
160
160
146
188
88
192
14

FIG.13

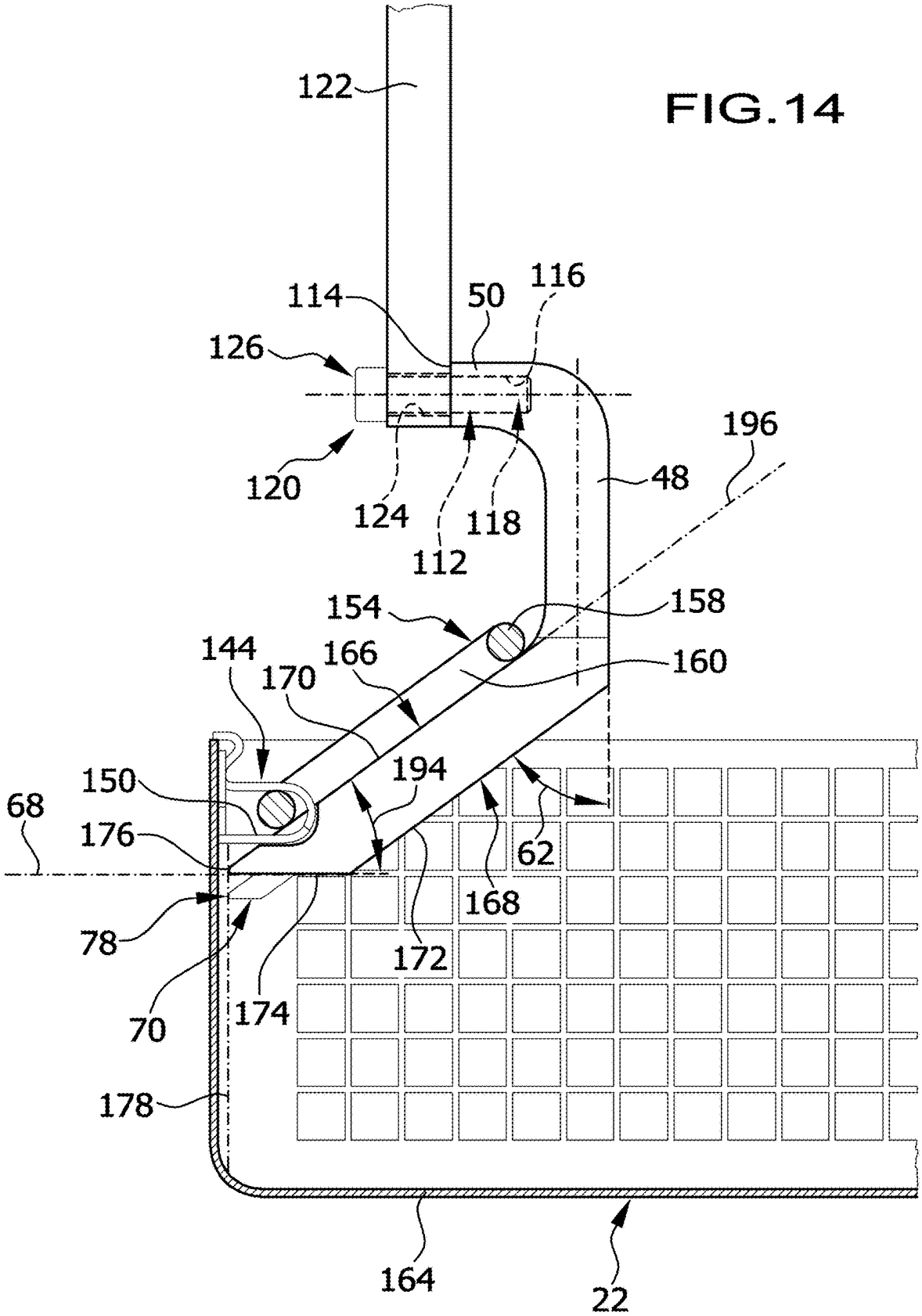
122
114
50
116
126
120
124
112
118
48
196
154
158
144
166
170
160
150
194
68
176
62
168
78
172
70
174
178
164
22

FIG.14

HANDLING SYSTEM FOR STERILE GOODS CONTAINERS AND METHOD FOR MACHINE HANDLING OF STERILE GOODS CONTAINERS

CROSS-REFERENCE TO RELATED APPLICATIONS

[0001] This application is a continuation, under 35 U.S.C. § 365, of International Application No. PCT/EP2023/083315, filed on Nov. 28, 2023, and claims priority to German Application No. 10 2022 131 591.6, filed on Nov. 29, 2022. The contents of International Application No. PCT/EP2023/083315 and German Application No. 10 2022 131 591.6 are incorporated by reference herein in their entireties.

FIELD

[0002] The present disclosure relates to a handling system for sterile goods containers, in particular for automatically opening sterile goods containers.

[0003] Furthermore, the present disclosure relates to a method for machine handling of sterile goods containers, said containers comprising a sterile goods container tray and a sterile goods container lid, wherein the sterile goods container lid comprises two locking brackets, which are held on the sterile goods container lid so as to be pivotable about a pivot axis, for locking the sterile goods container lid on the sterile goods container tray in a closing position.

BACKGROUND

[0004] Sterile goods containers are known in a wide variety of embodiments. As an example, reference is made in this regard to DE 10 2020 103 131 A1.

[0005] Sterile goods containers serve, in particular, for the transport and storage of medical instruments and implants. The sterile goods containers typically comprise a sterile goods container tray and a sterile goods container lid that closes said tray in a closing position. However, the medical instruments and implants are typically not stored directly in these sterile goods containers, but rather in sieve baskets that are accommodated in these sterile goods containers.

[0006] In the closing position, the sterile goods containers are locked. A locking mechanism is described as an example in DE 10 2018 117 046 A1. In order to transfer the sterile goods container from the locked closing position into an unlocking position, a locking bracket of the locking mechanism must be actuated, namely pivoted. Furthermore, WO 2008/078 169 A2 describes a sterile goods container with a closure mechanism that can be operated with one hand.

[0007] Until now, after a use in a sterile environment, sterile goods containers of that kind are typically unpacked by hand on the so-called "unclean" side, i.e. as in a non-sterile environment. This means that one or more closures, i.e., in particular a locking mechanism mentioned above, must be opened on the sterile goods container lid. The sterile goods container lid can then be removed from the sterile goods container tray. In a next step, a sieve basket accommodated in the sterile goods container can be removed from the sterile goods container tray.

[0008] This manual procedure for unpacking sterile goods containers is time-consuming and also strenuous for the personnel responsible for this. Filled sterile goods containers can easily weigh more than 10 kg, such that handling them is a genuine physical strain if an operator has to handle such sterile goods containers all day.

SUMMARY

[0009] It is therefore an object of the present disclosure to improve a handling system for sterile goods containers and a method of the kind described at the outset in such a way that the handling of sterile goods containers is made easier.

[0010] This object is achieved, in accordance with the present disclosure, in a handling system for sterile goods containers of the kind described at the outset in that the handling system for sterile goods containers comprises at least one tool apparatus for opening sterile goods containers, in that the at least one tool apparatus comprises at least one first tool element for being brought into engagement with a locking bracket that is mounted on a sterile goods container lid of a sterile goods container so as to be pivotable about a pivot axis and in a storage position is oriented in parallel or substantially in parallel with a lid top side of the sterile goods container lid for locking the sterile goods container lid on a sterile goods container tray comprised by the sterile goods container in a closing position in which the sterile goods container lid closes the sterile goods container tray, and in that the first tool element has a lifting wedge for engaging under the locking bracket.

[0011] Further developing a handling system for sterile goods containers in the proposed way simplifies and facilitates, in particular, the handling of sterile goods containers. The at least one tool apparatus that is proposed in accordance with the present disclosure makes it possible in a simple manner to engage with the lifting wedge under a free end or a transverse web of a locking bracket on a sterile goods container lid and to then pivot the locking bracket about the pivot axis, namely through a movement of the at least one tool apparatus relative to the sterile goods container lid and thus also relative to the locking bracket. In particular, during such a relative movement, the locking bracket can slide on the lifting wedge and thus be forced guided. The proposed tool apparatus makes it possible, in particular, for sterile goods containers to be opened and unlocked by machine. An operator thus no longer has to open the sterile goods containers by hand, which can be stiff and are locked with a predetermined locking force. To this end, an operator can guide the at least one tool apparatus, for example, by hand. Alternatively, the at least one tool apparatus may also be arranged or held on a manipulation apparatus, for example on a robot, in order to thus fully automatically pivot the locking bracket by bringing the at least one tool apparatus into engagement with the lifting wedge comprised thereby.

[0012] It is favorable if the lifting wedge has a lifting wedge abutment face and a lifting wedge sliding face, if the lifting wedge abutment face, during the intended use of the at least one tool apparatus, is oriented in parallel with the lid top side, and if the lifting wedge abutment face and the lifting wedge sliding face enclose a wedge angle. A configuration of the lifting wedge of that kind makes it possible, in particular, to orient said lifting wedge with the lifting wedge abutment face in parallel with the lid top side and to also move it relative to the lid top side in order to then engage with the lifting wedge under the locking bracket on the sterile goods container lid. Here, the lifting wedge sliding face can then come into contact with the locking bracket and pivot the same in a forced manner upon a

movement of the at least one tool apparatus and the locking bracket relative to one another.

[0013] In order to make it possible to easily open the sterile goods containers, it is advantageous if the lifting lever sliding face is of planar or curved configuration. In particular, it may be of concavely or convexly curved configuration pointing away from the lifting wedge. In particular, a concave curvature of the lifting wedge sliding face enables a simple and secure engagement under a locking bracket on a sterile goods container lid.

[0014] The wedge angle preferably has a value in a range of about 10° to about 50°. With a lifting wedge that has such a wedge angle, it is possible to reliably engage under a locking bracket.

[0015] It is favorable if the lifting wedge abutment face and the lifting wedge sliding face intersect in a wedge edge, and if a lifting wedge sliding face length of the lifting wedge sliding face in parallel with the wedge edge is greater, in particular more than five times greater, than a lifting wedge sliding face width perpendicular to the wedge edge. Such an embodiment makes it possible, in particular, to form a narrow lifting wedge, which is ultimately required to slightly raise the locking bracket out of the storage position with a short movement path, i.e., with a relative movement between the at least one tool apparatus and the locking bracket. It is thus possible, in particular, to form the at least one tool apparatus as compactly as possible.

[0016] It is advantageous if the at least one tool element has a tool element base body and if the lifting wedge is arranged or formed distally on the tool element base body. Thus, in particular, the lifting wedge can be formed as small as possible, but the tool element base body large and thus also more stable in order to, in particular, pivot the locking bracket, as is described in more detail in the following, further out of the storage position, also against possible forces exerted by the locking mechanism. The at least one tool apparatus, in particular, can thus be formed to be sufficiently stable for the desired application. In particular, the lifting wedge may be arranged or formed distally in such a way that it projects from the tool element base body both to the front and also pointing away from a top side of the tool element base body. It can thus be ensured, in particular, that a contact between the at least one tool apparatus and the locking bracket always takes place with the lifting wedge first and then the tool element base body is able to come into contact with the locking bracket.

[0017] It is favorable if the tool element base body has a base body abutment face and a base body sliding face for lifting and opening the locking bracket, and if the base body abutment face and the base body sliding face enclose a base body wedge angle. A configuration of that kind enables, in particular, a wedge-shaped form of the tool element base body. For example, to open the locking bracket, the tool element base body can be moved with the base body abutment face in parallel with the lid top side of the sterile goods container lid.

[0018] In order to enable an optimal movement of the at least one tool apparatus along and in parallel with the lid top side, it is favorable if the base body abutment face extends in parallel or substantially in parallel with the lifting wedge abutment face. The base body abutment face and the lifting wedge abutment face are preferably spaced at a distance from one another. The lifting wedge can thus project from the tool element base body to the front and to the bottom relative to said base body.

[0019] It is advantageous if the base body abutment face defines an abutment face plane and if the lifting wedge projects beyond the abutment face plane. As already explained, when it comes into contact with the locking bracket, the at least one tool apparatus can thus first act with the lifting wedge on the locking bracket in order to lift it slightly out of the storage position.

[0020] Preferably, the base body wedge angle has a value that corresponds to or substantially corresponds to the wedge angle of the lifting wedge. This makes it possible, in particular, to continuously pivot the locking bracket relative to the sterile goods container lid when the at least one tool apparatus acts on the locking bracket.

[0021] It is advantageous if the tool element base body has a base body top side, which defines the base body sliding face, and if a latching recess that is recessed relative to the base body sliding face is formed on the base body top side. Such a latching recess can accommodate, in particular, part of the locking bracket, for example a transverse web thereof forming a handle region, in order to couple the locking bracket to the at least one tool apparatus in a defined manner. For example, said transverse web may latch into the latching recess in a handling position.

[0022] In order to be able to handle and manipulate the sterile goods container with the at least one tool apparatus, in particular, in the desired manner, the latching recess favorable has a retaining face pointing away from the lifting wedge and a latching face extending in parallel or substantially in parallel with the base body sliding face. Such a configuration makes it possible, in particular, to accommodate the described transverse web of the locking bracket and to bring it into abutment against both the retaining face and the latching face. The retaining face makes it possible to prevent, in particular, the locking bracket from slipping off the at least one tool apparatus in an undesired manner. The retaining face therefore forms a stop face for part of the locking bracket when it is accommodated in the latching recess.

[0023] Preferably, the retaining face extends transversely, in particular perpendicularly, to the base body sliding face and defines a respective intersection line with the base body sliding face and the latching face. Thus, depending on a depth of the latching recess, a defined and reliable stop face for part of the locking bracket can be formed by the retaining face.

[0024] It is advantageous if the latching face has a latching face width perpendicular to the retaining face and if the latching face width is greater than a web width of a transverse web of the locking bracket extending perpendicular to the pivot axis. Thus, through the selection of the size of the latching face width, it can be ensured, in particular, that a transverse web of the locking bracket on the sterile goods container lid is able to be accommodated in the latching recess over its entire web width. Thus, in particular, with the at least one tool apparatus, it is also possible to hold the locking bracket under pretension relative to the sterile goods container lid if necessary, without the locking bracket being able to slip off the at least one tool apparatus.

[0025] It is favorable if the tool element base body defines a base body width parallel to the wedge edge and if the latching face extends over the entire base body width. It can

thus be achieved, in particular, that a transverse web of the locking bracket is able to abut completely and, as the case may be, in surface-to-surface contact against the latching face. The retaining face can thus also exert its effect on an entire length, thus over the base body width.

[0026] It may further be advantageous if the tool element base body has a base body bottom side pointing away from the base body top side and if the base body bottom side comprises a base body bottom side face extending parallel with the base body sliding face. This configuration makes it possible to form the tool element base body in a substantially cuboidal shape. It can thus be formed particularly compactly and with as little material as possible. In particular, a weight of the at least one tool apparatus can thus be minimized.

[0027] In order to be able to optimally handle sterile goods containers with locking brackets of the described type using the handling system for sterile goods containers, it is advantageous if the locking bracket has an engagement portion, if the engagement portion defines an engagement portion width parallel with the pivot axis, and if a lifting wedge sliding face length and a base body width of the tool element base body parallel with the wedge edge are smaller than the engagement portion width. This configuration makes it possible, in particular, to not only bring the first tool element into engagement with the locking bracket, but also to pass it through the engagement portion of the locking bracket. Thus, in particular, a transverse web can be brought into engagement with a latching recess, which may optionally be provided on the first tool element as described above.

[0028] In accordance with a further preferred embodiment, provision may be made that the at least one tool apparatus comprises a first interface device for directly or indirectly coupling to a mechanical handling apparatus in a force-locking and/or positive-locking manner for moving, in particular for displacing, rotating, and/or pivoting, the at least one tool apparatus. The first interface device makes it possible, in particular, to selectively couple the at least one tool apparatus to a handling apparatus and to also remove it therefrom as necessary. Alternatively, the first interface device may also serve to couple the at least one tool apparatus to a handle, such that a user is also able to use the tool apparatus to pivot the locking bracket on the sterile goods container lid in a manner that is ergonomic for the user in order to unlock the sterile goods container lid. The first interface device makes it possible, in particular, to use the first tool apparatus in connection with handling apparatuses that are also used for other purposes. In addition, different tool apparatuses can thus also be used with the handling apparatus, in particular in order to handle different types of sterile goods containers.

[0029] Preferably, the first interface device comprises at least one first interface element, which is coupleable in a force-locking and/or positive-locking manner to a corresponding second interface element that is arranged or formed on the handling apparatus or is associated therewith. The interface elements may be configured, in particular, in the form of projections and recesses corresponding to said projections. In particular, the interface elements may comprise a threaded bore, a through-bore, and a screw element in order to couple the first tool apparatus to the handling apparatus, namely by screwing. Alternatively, bayonet-like interface elements for forming a bayonet connection are also conceivable. But also temporary force-locking connections, such as are able to be established, for example, by means of permanent magnets or electromagnets, are usable for coupling the first and second interface elements.

[0030] For handling sterile goods containers, it is favorable if the handling apparatus comprises a robot. In particular, said robot may comprise a robot arm with a plurality of articulated portions, which are pivotable relative to one another and optionally also rotatable about their respective longitudinal axis. It is thus possible, in particular, to orient the at least one tool apparatus and position it in space in the desired manner with the robot, for example relative to a sterile goods container, in particular to its sterile goods container lid.

[0031] It is advantageous if the handling apparatus comprises an actuator device, if the actuator device is directly or indirectly coupled or coupleable to the robot on the one hand and to the at least one tool apparatus on the other hand, and if the actuator device is configured to move the at least one tool apparatus, in particular to displace, rotate, and/or pivot the same. In particular, the actuator device may be coupleable to a robot as specified. The actuator device can thus be positioned in space and oriented in the desired manner, in particular relative to the sterile goods container lid. The actuator device also enables an additional movement of the at least one tool apparatus, independent of a movement of the robot. Thus, for example, the robot can position the actuator device relative to the sterile goods container lid. A movement of the at least one tool apparatus can then also be brought about by the actuator device. In particular, the actuator device can displace, rotate, and/or pivot the at least one tool apparatus in order to, for example, move, in particular pivot, a locking bracket on the sterile goods container in the desired manner.

[0032] In order to be able to move the at least one tool apparatus in the desired manner, it is advantageous if the actuator device comprises a drive. Said drive may be configured, in particular, in the form of an electromotive drive and/or a pneumatic drive. In particular, displacement movements of the at least one tool apparatus can thus be performed with the actuator device in a simple manner. The drive may comprise, in particular, gear spindles and/or piston-cylinder arrangements in order to move the at least one tool apparatus.

[0033] The drive is preferably configured in the form of a linear drive and/or a pivot drive and/or a rotary drive. The at least one tool apparatus can thus be displaced, rotated, or pivoted with the actuator device in a simple manner.

[0034] The actuator device advantageously comprises a second interface device for directly or indirectly coupling to the robot in a force-locking and/or positive-locking manner. This configuration makes it possible, in particular, to separate the actuator device with one or more tool apparatuses coupled thereto from the robot or to reconnect it to said robot. In particular, the second interface device may be a defined, standardized interface device, which are known for coupling apparatuses of any kind to a robot.

[0035] In principle, it is conceivable to connect the at least one tool apparatus directly to the actuator device, for example with pistons or threaded rods of corresponding drives of the actuator device. It is favorable if the at least one tool apparatus and the actuator device are indirectly connected to one another by way of an adapter element. Thus, for example, a standardized actuator device can be coupled to the at least one tool apparatus so that an actuation of the locking bracket in the desired manner is possible. In par-

ticular, spatial or geometric requirements in the use of the handling system for sterile goods containers can thus be fulfilled, for example in order to handle different types of sterile goods containers with the same tool apparatuses.

[0036] The handling system for sterile goods containers favorably comprises two tool apparatuses, which, in particular, are held directly or indirectly on the actuator device with lifting wedges pointing away from one another or pointing toward one another. This configuration makes it possible, in particular, to simultaneously or successively handle two locking mechanisms arranged on face sides of the sterile goods container that point away from one another, in particular to simultaneously or successively actuate the respective locking brackets with the two tool apparatuses in order to unlock the sterile goods container lid and to optionally also lift it from the sterile goods container tray.

[0037] Advantageously, the actuator device is configured to move the at least one tool apparatus in a path-controlled and/or force-controlled manner. In this way, on the one hand a position of the at least one tool apparatus relative to the sterile goods container and on the other hand forces exerted by the at least one tool apparatus on the sterile goods container, in particular on the locking bracket on the sterile goods container, can be predetermined. A risk of damage to the sterile goods containers by the handling system for sterile goods containers can thus be minimized.

[0038] For a simple structure and compact configuration of the tool apparatus, it is favorable if the at least one tool apparatus is of symmetrical configuration relative to a midplane extending perpendicularly to the wedge edge. In particular, the at least one tool apparatus may be of mirror-symmetrical configuration relative to the midplane.

[0039] In accordance with a further preferred embodiment, provision may be made that the at least one tool apparatus comprises a support element, and that the at least one first tool element is arranged or formed projecting transversely, in particular perpendicularly, relative to a support element longitudinal axis defined by the support element. With such a support element, it is possible, in particular, to arrange and position the at least one first tool element in the desired manner. In addition, such a support element also enables a simple configuration and arrangement of the first interface device described above. The at least one first tool element may optionally be configured to be connectable to the support element in a force-locking and/or positive-locking manner. Alternatively, a one-piece, in particular monolithic, configuration of the at least one first tool element and the support element is also possible.

[0040] It is favorable if the at least one tool apparatus comprises at least one second tool element for being brought into positive-locking or substantially positive-locking engagement with a swivel bracket of a sieve basket that is insertable into a sterile goods container and/or with a swivel bracket holding element holding the swivel bracket on the sieve basket so as to be pivotable about a swivel bracket axis. For example, the swivel bracket holding element may be configured in the form of a recess for a free end, bent by 90°, of one of two legs extending in parallel or substantially in parallel with one another of a swivel bracket that as a whole has a U-shape. The swivel bracket holding element may be arranged, in particular, on an end wall of the sieve basket, namely on a side face of the end wall that points toward an inner space of the sieve basket. Optionally, a support may also be provided on the swivel bracket holding element, which predetermines an orientation of the swivel bracket in a rest position, i.e., when not external forces are being exerted on the swivel bracket except for gravitational force. In the rest position, the pivot bracket is preferably oriented in parallel or substantially in parallel with a base of the sieve basket. The configuration of the at least one second tool element for being brought into engagement with a swivel bracket holding element has the advantage, in particular, that the sieve basket is able to be directly accessed. If the swivel bracket holding element is immovably held on the sieve basket, the sieve basket can thus be reliably and securely manipulated in the desired manner by bringing the swivel bracket holding element and the at least one second tool element into engagement.

[0041] For a compact structure of the tool apparatus, it is favorable, in particular, if the at least one second tool element is arranged or formed on the support element. In particular, it may be arranged or formed projecting from the support element, for example, in parallel with the first tool element, i.e., in the same direction as it.

[0042] The at least one second tool element advantageously comprises a coupling receptacle for being brought into positive-locking engagement with a swivel bracket holding element of a sieve basket. The swivel bracket holding element can thus, in particular, be brought into engagement with the at least one second tool element in a simple manner. To achieve this, no complex mechanism with movable parts has to be provided on the at least one second tool element, which would enable a force-locking coupling. In particular, the gravitational force can thus be used to couple the swivel bracket holding element and the at least one second tool element.

[0043] It is favorable if the at least one second tool element has a tool element top side and if the coupling receptacle is arranged or formed on the tool element top side. Thus, for example, the swivel bracket holding element can dip or engage into the coupling receptacle from above in order to enable a positive-locking engagement between the swivel bracket holding element and the at least one second tool element.

[0044] It is advantageous if the at least one first tool element and the at least one second tool element are separated from one another by a cutout. Such a cutout makes it possible, in particular, to pass through an engagement portion on the locking bracket with the at least one first tool element, even if the at least one tool apparatus has at least one second tool element provided. Thus, for example, a leg of a substantially U-shaped or O-shaped locking bracket is able to engage into the cutout between the at least one first and the at least one second tool element when the at least one first tool element passes through the engagement portion on the locking bracket.

[0045] The at least one tool apparatus preferably comprises two second tool elements. This configuration makes it possible, in particular, with the at least one tool apparatus to simultaneously bring each of the two second tool elements into engagement with a respective swivel bracket holding element, which are associated with a common swivel bracket. If two tool apparatuses of this kind are provided, then the four swivel bracket holding elements of the two swivel brackets of the sieve basket can be brought into engagement with the two tool apparatuses in a defined manner. This tool apparatuses coupled to the sieve basket in this manner can then be used, in particular, through corre-

sponding manipulation, i.e., movement thereof in space, for example with a handling apparatus, to remove the sieve basket from the sterile goods container, for example from the sterile goods container tray. In particular, this may take place fully automatically if the handling apparatus is referenced in a predefined coordinate system. This coordinate system may be predefined, for example, by the sterile goods container, for example a corresponding mechanical or electronic element, which predetermines a coordinate system in three-dimensional space in a defined manner.

[0046] It is advantageous if the coupling receptacles of the two second tool elements define a common coupling receptacle longitudinal axis and if the coupling receptacle longitudinal axis extends in parallel or substantially in parallel with the swivel bracket pivot axis when a swivel bracket holding element is accommodated in each coupling receptacle of the two second tool elements. As described, the at least one tool apparatus thus does not engage on the swivel bracket itself, but instead on a holder of the swivel bracket, namely the swivel bracket holding elements comprised by such a holder. If said swivel bracket holding elements are fixed directly to the sieve basket, namely in an immovable manner, then the sieve basket can be directly manipulated by bringing the at least one tool apparatus into engagement with the two swivel bracket holding elements as described. In particular, it is thus also possible to handle a sterile goods container on which the swivel bracket is deformed or damaged. For example, a coupling of the at least one tool apparatus to the sieve basket is possible independently of a shape of the swivel bracket. If the swivel bracket holding elements are arranged or formed on the sieve basket in a standardized form, then a wide variety of sieve baskets can be brought into engagement with the same tool apparatus in a simple and secure manner.

[0047] The at least one first tool element is favorably arranged between the two second tool elements. In particular, a symmetrical configuration of the tool apparatus can thus be achieved. In particular, with such a tool apparatus, which comprises the two second tool elements and a first tool element, a sterile goods container lid on the one hand and a sieve basket on the other hand are able to be handled by machine in the described manner.

[0048] A simple and compact structure of the at least one tool apparatus can be achieved, in particular, by the two second tool elements being arranged or formed symmetrically relative to the midplane.

[0049] It may further be favorable if a transverse stop is arranged or formed on each coupling receptacle for delimiting a movement of the at least one tool apparatus relative to a sterile goods container in a direction parallel with the swivel bracket pivot axis when the swivel bracket holding elements are accommodated in the coupling receptacles. Thus, by means of such a transverse stop, an undesired movement of the sieve basket in a direction parallel to the swivel bracket pivot axis relative to the at least one tool apparatus can be prevented.

[0050] In order to minimize a relative movement of the sieve basket and the at least one tool apparatus, in particular aside from unavoidable play, it is advantageous if the transverse stop delimits the coupling receptacle laterally in the direction toward the at least one first tool element.

[0051] It is favorable if the at least one second tool element has a tool element abutment face, if the tool element abutment face defines part of a tool element bottom side of the at least one second tool element, and if the tool element abutment face extends in parallel or substantially in parallel with the base body abutment face and/or with the lifting wedge abutment face. Such a tool element abutment face may serve, in particular, to orient the at least one second tool element in parallel with a lid top side of a sterile goods container lid.

[0052] The tool element abutment face preferably lies in the abutment face plane or defines the latter. This configuration can ensure, in particular, that only the lifting wedge projects beyond the abutment face plane. Thus, even if two second tool elements are provided, the handling of a locking bracket on a sterile goods container lid can be reliably ensured, even when two second tool elements are additionally provided with which an engagement with a sieve basket is able to be established.

[0053] It is advantageous if the at least one second tool element has a tool element sliding face for lifting a swivel bracket of the sieve basket and if the tool element abutment face and the tool element sliding face enclose a tool element wedge angle. The tool element sliding face makes it possible, in particular, for a swivel bracket to slide thereon, said swivel bracket being oriented, as described, in parallel with a base of the sieve basket in a resting or transport position, in order to thus enable a reliable and unimpeded engagement of the swivel bracket holding elements into the coupling receptacles.

[0054] The tool element wedge angle preferably corresponds to or substantially corresponds to the base body wedge angle. It can thus be made possible, in particular, that the tool element sliding face and the base body sliding face define a common sliding face plane. In this way, it can then be prevented that the swivel bracket is able to dip with a transverse web extending in parallel with the swivel bracket pivot axis into the latching recess.

[0055] As already explained, it is advantageous if the tool element sliding face and the base body sliding face define a common sliding face plane. Thus, in particular, a transverse web of the swivel bracket, said web extending in parallel with the swivel bracket pivot axis, can be prevented from dipping into the latching recess.

[0056] It is further favorable if the at least one second tool element has a tool element bottom side pointing away from the tool element top side and if the tool element bottom side comprises a tool element bottom side face extending in parallel with the tool element sliding face. This embodiment makes it possible, in particular, to configure the at least one second tool element to be substantially cuboidal, except for a free end. The coupling receptacle may be arranged or formed in the region of the free end. It can thus be achieved that the at least one tool apparatus has a minimal weight.

[0057] The at least one tool apparatus can be configured to be particularly stable if it is formed in one piece, in particular monolithically.

[0058] It is further favorable if the at least one tool apparatus is made of a metallic material. In particular, it may be an instrument steel that is sterilizable by superheated steam. The at least one tool apparatus can thus be optimally cleaned and can also be used for an application in a sterile environment, as the case may be.

[0059] The object stated at the outset is further achieved, in accordance with the present disclosure, in a method of the kind described at the outset in that a handling system for sterile goods containers described above is provided, and in

that the at least one tool apparatus is brought into engagement with a locking bracket for pivoting the same from the closing position, in which the locking bracket is oriented in parallel or substantially in parallel with the lid top side of the sterile goods container, about the pivot axis into an unlocking position, in which the sterile goods container lid and the sterile goods container tray are unlocked.

[0060] The proposed method makes it possible, in particular, to unlock and open a sterile goods container fully automatically. To this end, for example, one of the advantageous embodiments of handling systems for sterile goods containers described above can be used. It is thus possible to open sterile goods containers in a manner that is sustainable, comfortable, and less physically strenuous for an operator.

[0061] It is favorable if a transverse web of the locking bracket is accommodated in the latching recess on the at least one first tool element and is held therein under tension against the retaining face. In particular, in this way, the sterile goods container lid can be prevented from slipping off the at least one tool apparatus of the handling system for sterile goods containers. If, for example, two tool apparatuses are provided, which are each in engagement with a respective locking bracket in the described manner, the sterile goods container lid can thus be grasped with the two tool apparatuses and handled accordingly, for example lifted from a sterile goods container tray and placed at a predefined storage location.

[0062] In particular, in order to make the contents of the sterile goods container accessible and to optionally be able to remove them from the sterile goods container tray, it is advantageous if the sterile goods container lid is lifted from the sterile goods container tray by the handling apparatus.

[0063] It is further advantageous if a sieve basket accommodated in the sterile goods container is automatically removed with the handling system for sterile goods containers. In this way, no operator is required to remove the sieve basket from the sterile goods container, in particular from the sterile goods container tray comprised thereby. Such an automatic handling of sterile goods containers enables, in particular, a use in connection with highly contaminated sterile goods containers that, for example, are contaminated with highly infectious material.

[0064] For an optimal handling of the sieve basket, it is advantageous if a tool apparatus is brought into positive-locking or substantially positive-locking engagement with the two swivel bracket holding elements of the sieve basket on which a swivel bracket is held so as to be pivotable about a swivel bracket pivot axis. As explained, the sieve basket can thus be removed from the sterile goods container in a defined and secure manner when, in particular, two tool apparatuses are brought into engagement with the two swivel bracket holding elements of the two swivel brackets in the described manner. Furthermore, it also has advantages if a tool apparatus is brought into force-locking engagement with the two swivel bracket holding elements of the sieve basket on which a swivel bracket is held so as to be pivotable about a swivel bracket pivot axis. Thus, a sieve basket can be handled even if the tool apparatus is not specially configured, for example, to engage with the two swivel bracket holding elements in a positive-locking or substantially positive-locking manner. The tool apparatus can thus be used universally.

[0065] Advantageously, the sieve basket is lifted out of the sterile goods container with the handling apparatus. The sterile goods container can thus be completely emptied. In particular, two or more sieve baskets can thus be removed from a correspondingly large sterile goods container.

[0066] Furthermore, the use of one of the handling systems for sterile goods containers described above for performing one of the methods described above is proposed.

BRIEF DESCRIPTION OF THE DRAWINGS

[0067] The subsequent description of preferred embodiments of the present disclosure serves in conjunction with the drawings for further explanation. In the drawings:

[0068] FIG. **1** shows a schematic perspective partial view of an embodiment of a handling system for sterile goods containers with a closed sterile goods container in the storage position;

[0069] FIG. **2** shows a view similar to FIG. **1** upon a tool apparatus of the handling system for sterile goods containers being brought into engagement with a locking bracket on the sterile goods container lid of the sterile goods container;

[0070] FIG. **3** shows an enlarged partial view of the region A in FIG. **2**;

[0071] FIG. **4** shows a section view along line **4-4** in FIG. **3**;

[0072] FIG. **5** shows a schematic perspective view similar to FIG. **3**, with the locking bracket pivoted with the tool apparatus;

[0073] FIG. **6** shows a section view along line **6-6** in FIG. **5**;

[0074] FIG. **7** shows a schematic view similar to FIG. **2**, upon the sterile goods container lid being lifted from the sterile goods container tray with the handling system for sterile goods containers;

[0075] FIG. **8** shows an enlarged perspective partial view of the arrangement from FIG. **7**;

[0076] FIG. **9** shows an enlarged perspective partial exploded depiction of an embodiment of a sterile goods container lid in the region of a locking mechanism;

[0077] FIG. **10** shows a schematic, partial section view of an embodiment of an actuator device of the handling system for sterile goods containers;

[0078] FIG. **11** shows a schematic perspective total view of an embodiment of a handling system for sterile goods containers upon removal of a sieve basket from a sterile goods container tray;

[0079] FIG. **12** shows an enlarged partial view of the region B from FIG. **11**;

[0080] FIG. **13** shows a plan view of the arrangement from FIG. **12**; and

[0081] FIG. **14** shows a section view along line **14-14** in FIG. **13**.

DETAILED DESCRIPTION

[0082] Schematically depicted in the Figures is a first embodiment of a handling system **10** for sterile goods containers. In particular, it is configured to automatically open sterile goods containers **14**.

[0083] The sterile goods container **14** depicted schematically in FIG. **1** comprises a sterile goods container tray **16**, which defines a receiving space **18**, and a sterile goods container lid **20**.

[0084] One or more sieve baskets **22** are able to be accommodated in the sterile goods container **14**, depending on their size. In particular, medical instruments and/or

implants, which are not shown in the Figures for the sake of clarity, are able to be accommodated in said sieve baskets, namely both for cleaning and sterilization purposes, and also for storage and transport purposes.

[0085] An essential element of the handling system **10** for sterile goods containers is a tool apparatus, which is denoted with the reference numeral **12**. In the embodiment depicted in the Figures, the handling system **10** for sterile goods containers comprises two identically configured tool apparatuses **12**. They are configured, in particular, to open the sterile goods container **14**, to lift the sterile goods container lid **20**, which is unlocked from the sterile goods container tray **16**, and to lift out the sieve basket **22** accommodated in the sterile goods container tray **16** in the receiving space **18**.

[0086] In the following, for the sake of simplicity, one of the two tool apparatuses **12** will be described in detail.

[0087] The tool apparatus **12** comprises a first tool element **24** for being brought into engagement with a locking bracket **26** of a container closure **28**, which is denoted as a whole with the reference numeral **28**. The structure of the container closure **28** is described in detail in DE 10 2018 117 046 A1, such that reference can be made to said published patent application in this regard.

[0088] The locking bracket **26**, which is mounted on the sterile goods container lid **20** so as to be pivotable about a pivot axis **30**, serves to actuate the container closure **28**. The pivot axis **30** extends in parallel with a lid top side **32** of the sterile goods container lid **20**.

[0089] In a storage position as it is schematically depicted in FIG. **1**, the locking bracket **26** is oriented substantially in parallel with the lid top side **32** for locking the sterile goods container **20** on the sterile goods container tray **16** in a closing position, in which the sterile goods container lid **20** closes the sterile goods container tray **16**.

[0090] In order to be able to lift the sterile goods container lid **20** from the sterile goods container tray **16**, the container closure **28** must be unlocked. To this end, the locking bracket **26** must be pivoted from the storage position away from the lid top side **32** about the pivot axis **30**.

[0091] In the embodiment of the sterile goods container **14** depicted in the Figures, the locking bracket **26** is of substantially plate-shaped configuration and comprises a substantially rectangular engagement portion **34**, which extending away from the pivot axis **30** and in parallel thereto is delimited by a transverse web **36**. The transverse web **36** forms a sort of free end of the locking bracket **26**, which in the storage position points in the direction toward the other, identically configured container closure **28**.

[0092] The tool apparatus **12** as a whole is configured mirror-symmetrically to a midplane **38**. It comprises an elongate cuboidal support element **40**, which defines a support element longitudinal axis **42**. Formed projecting from a support element top side **44** is an L-shaped angle piece **46**, with a first leg **48** projecting toward the top and a second leg **50** projecting perpendicularly therefrom toward the front.

[0093] The angle piece **46** is configured mirror-symmetrically to itself relative to the midplane **38**.

[0094] The first tool element **24** projects from the support element **40** obliquely forward and downward and symmetrically to itself relative to the midplane **38**. It has a tool element base body **52**.

[0095] The tool element base body **52** has a base body top side **54** and a base body bottom side **56** pointing away from said top side. The base body top side **54** defines a base body sliding face **58**. The base body bottom side **56** defines a base body bottom side face **60**. The base body bottom side face **60** extends in parallel with the base body sliding face **58**.

[0096] The base body bottom side face **60** together with the first leg **50** enclose a base body angle **62**, which has a value in a range of about 30° to about 60°. In the embodiments depicted in the Figures, the base body angle **62** is about 55°, as schematically drawn in FIG. **14**.

[0097] In addition to the base body sliding face **58**, which serves for lifting and opening the locking bracket **26**, the tool element base body **52** comprises a base body abutment face **64**, which extends in parallel or substantially in parallel with the second leg **50**.

[0098] The base body abutment face **64** and the base body sliding face **58** enclose a base body wedge angle **66**. Said angle has a value in a range of about 10° to about 50°. In the embodiment depicted in the Figures, the base body wedge angle **66** is almost 40°.

[0099] The base body abutment face **64** defines an abutment face plane **68**.

[0100] The first tool element **24** comprises a lifting wedge **70**, which is configured to engage under the locking bracket **26** in the storage position, as can be seen schematically in FIG. **4**. The lifting wedge **70** is arranged or formed distally, i.e., on a free end of the tool element base body **52**.

[0101] The lifting wedge **70** has a lifting wedge abutment face **72** and a lifting wedge sliding face **74**. The lifting wedge sliding face **72** extends in parallel with the base body abutment face **64**.

[0102] As can be seen, for example, in FIG. **4**, the lifting wedge **70** projects from the tool element base body **52** downward beyond the abutment face plane **68**.

[0103] A rear side **76** of the lifting wedge **70** extends in parallel with the lifting wedge sliding face **74**.

[0104] The lifting wedge abutment face **72** and the lifting wedge sliding face **74** intersect in a wedge edge **78**, which is somewhat flattened off in the embodiment depicted in the Figures.

[0105] The lifting wedge abutment face **72**, during the intended use of the tool apparatus **12**, is oriented in parallel with the lid top side **32**, as can be seen schematically in FIG. **4**.

[0106] The lifting wedge abutment face **72** and the lifting wedge sliding face **74** enclose a wedge angle **80**. Said angle has a value in a range of about 10° to about 50°. In the embodiment depicted in the Figures, the wedge angle **80** is almost 40°. In the embodiment depicted in the Figures, it corresponds to the base body wedge angle **66**.

[0107] The rear side **76** extends in parallel with the base body bottom side face **60**. The lifting wedge sliding face **74** extends in parallel with the base body sliding face **58**, but is set back therefrom in the direction toward the base body bottom side face **60**.

[0108] The lifting wedge sliding face **74** is of planar configuration commencing from the wedge edge **78**, but then transitions in a concavely curved manner pointing away from the lifting wedge **70** into an orientation in parallel with the first leg **48**, such that an edge **82** is formed in the transition between the lifting wedge sliding face **74** and the base body sliding face **58**.

[0109] The lifting wedge sliding face **74** has a lifting wedge sliding face length **84** in parallel with the wedge edge **78**. A lifting wedge sliding face width **86** perpendicular to

the wedge edge **78** is drawn schematically in FIG. **4**, namely in parallel with the base body sliding face **58**. The lifting wedge sliding face length **84** is significantly greater than the lifting wedge sliding face width **86**. In the embodiment depicted in the Figures, the lifting wedge sliding face length **84** is more than five times greater than the lifting wedge sliding face width **86**.

[0110] The tool element base body **52** defines a base body width **88** in parallel with the wedge edge **78**. The wedge edge **78** extends over the entire width of the tool element base body **52**. Thus, the lifting wedge sliding face length **84** corresponds to the base body width **88**.

[0111] A latching recess **90** that is recessed relative to the base body sliding face **58** is formed on the tool element base body **52** on the base body top side **56**. It has a retaining face **92** pointing away from the lifting wedge **70** and a latching face **94** extending in parallel or substantially in parallel with the base body sliding face **58**. The retaining face **92** extends transversely, namely perpendicularly in the embodiment depicted in the Figures, to the base body sliding face **58**. Together with the base body sliding face **58**, it forms a first intersection line and, with the latching face **94**, forms a second intersection line **98**.

[0112] The latching face **94** has a latching face width **100** perpendicular to the retaining face **92**. In the case of the tool apparatus **12**, the latching face width **100** is selected such that it is greater than a web width **102** of the transverse web **36** of the locking bracket **26** extending perpendicularly to the pivot axis **30**. The transverse web **36** can thus be accommodated in the latching recess **90** over the entire web width **102**.

[0113] The engagement portion **34** on the locking bracket **26** defines an engagement width **104** in parallel with the pivot axis **30**. So that both the lifting wedge **70** and the tool element base body **52** are able to be inserted through the engagement portion **34**, the tool element base body **52** is dimensioned in such a way that both the lifting wedge sliding face length **84** and the base body width **88** are smaller than the engagement portion width **104**.

[0114] The transverse web **36** can dip into the latching recess **90** up to the latching face **94** and can contact the latching face **94**, because the latching face **94** extends over the entire base body width **88**.

[0115] The embodiment depicted in the Figures of the handling system **10** for sterile goods containers further comprises a handling apparatus **106** for moving, namely in particular for displacing, rotating, and/or pivoting, the tool apparatuses **12**. The handling apparatus **106** comprises an actuator device **108**, which is configured to move the tool apparatuses **12**, in particular to displace, rotate, and/or to pivot the same.

[0116] The handling apparatus **106** further comprises a robot **110**, which in FIG. **1** is only partially shown schematically with dashed lines. Said robot may be a robot **110** comprising a plurality of articulated arms, which are pivotable relative to one another and optionally are also rotatable about their longitudinal axes.

[0117] For directly or indirectly coupling to the mechanical handling apparatus **106** in a force-locking and/or positive-locking manner, the tool apparatus **12** comprises a first interface device **112**. It comprises two first interface elements **118** in the form of blind holes **116**. The two blind holes **116** provided with internal threads are arranged or formed on the angle piece **46**, namely in face sides **114** of the angle piece **46**.

[0118] The first interface elements **118** can be brought into engagement with corresponding second interface elements, for example the screws **120** depicted as an example in the Figures, in order to, for example, be screwed to a plate-shaped adapter element **122**, which is provided with bores **124** corresponding to threaded portions of the screws **120**. This is depicted schematically, in particular, in FIG. **14**. A second interface element **126**, which is associated with the handling apparatus **106**, is thus formed by the screw **120** in connection with the bore **124**.

[0119] The actuator device **108** comprises a second interface device **128** for directly or indirectly coupling to the robot **110** in a force-locking and/or positive-locking manner.

[0120] As described, in the embodiments depicted in the Figures of the handling systems **10** for sterile goods containers, the actuator device **108** is indirectly coupled or coupleable to two tool apparatuses **12** by way of the adapter element **122**.

[0121] The actuator device **108** comprises a base body **130** on which a drive **132** is arranged. The drive **132** comprises four drive units **134**, which are depicted purely schematically in the Figures. Here, they are linear drive components, so that the drive **132** in the embodiment depicted is configured in the form of a linear drive. In embodiments that are not depicted, the drive **132** comprises a linear drive and/or a pivot drive and/or a rotary drive.

[0122] The drive **132** may be configured, in particular, in the form of an electromotive drive and/or pneumatic drive **132**.

[0123] The four drive units **134** are each coupled to the adapter element **122** by way of a further screw **138**.

[0124] The described actuator device **108**, in particular as it is schematically depicted in the Figures, enables a movement of the two tool apparatuses **12** toward one another or away from one another in a direction that runs parallel with a longitudinal axis **140** of the drive units **134**.

[0125] The two tool apparatuses **12**, as described, are indirectly coupled to the actuator device **108** by way of the adapter element **122**, namely in such a way that the lifting wedges **70** point in opposite directions.

[0126] The actuator device **108** is optionally configured in such a way that two drive units that are connected to the same adapter element **122** are always able to be moved synchronously. This makes it possible, in particular, to move the two tool apparatuses **12** independently of one another relative to the base body **130**. Optionally, they can of course be moved together, in particular synchronously, to the base body **130**, namely selectively away from one another or toward one another or simultaneously in the one direction or the other.

[0127] The actuator device **108** is configured, in a manner that is not depicted in more detail, to move the tool apparatuses **12** in a path-controlled and/or force-controlled manner. For this purpose, in particular, force sensors may be provided on the drive units **134** or on the tool apparatuses **12**.

[0128] Path-controlled means, in particular, that when a position and an orientation of the sterile goods container **14** in space is known and accordingly the position and orientation of the actuator device **108** in space is known, the drive **132** is controllable in such a way that the tool apparatuses **12** are able to each be brought into a certain position in the

desired manner, in particular for being brought into engagement with the locking brackets **26** on the sterile goods container lid **20**.

[0129] The tool apparatuses **12** as a whole are of symmetrical configuration relative to the midplane **38** extending perpendicularly to the wedge edge **78**. Furthermore, the first tool element **24** is arranged or formed projecting transversely relative to the support element longitudinal axis **42** defined by the support element **40**.

[0130] The two tool apparatuses **12** furthermore each comprise two second tool elements **142**. These serve to be brought into positive-locking or substantially positive-locking engagement with swivel bracket holding elements **144** arranged or formed on the sieve basket **22**. On each of the face sides **146** extending in parallel with one another, pointing into an inner space **148** of the sieve basket **22**, two respective swivel bracket holding elements **144** are arranged in pairs. They define substantially elongate hole-like receptacles **150** for free end portions **152** of a swivel bracket **154** that point toward one another. The end portions **152** pointing toward one another define a swivel bracket pivot axis **156**, about which the swivel bracket **154** is pivotable.

[0131] The swivel bracket **154** comprises a handle portion **158** extending rectilinearly and in parallel with the face sides **146** and comprises two connecting portions **160** arranged mirror-symmetrically, which connect the end portions **152** and the handle portion **158**.

[0132] In a storage position as is schematically depicted in FIG. **7**, the swivel brackets **154** are supported on lateral supports, which are formed on each face side **146** on one of the swivel bracket holding elements **144**, such that the regions of the swivel bracket **154** defining a common plane, namely the handle portion **158** and the two connecting portions **160**, are oriented in parallel or substantially in parallel with a base **164** of the sieve basket **22**.

[0133] The two second tool elements **142** are also arranged or formed on the support element **40** and extend substantially in parallel with the first tool element **24** away from the support element **40**.

[0134] Each second tool element **142** comprises a tool element top side **166** and a tool element bottom side **168** pointing away from said tool element top side **166**. The tool element top side **166** defines a tool element sliding face **170**. The tool element bottom side **168** defines a tool element bottom side bottom face **172** extending in parallel with the tool element sliding face **170**.

[0135] The second tool element **142** further has a tool element abutment face **174**. It forms part of the tool element bottom side **168**. It is inclined against the tool element bottom side face **172** and encloses with it an obtuse angle, as is schematically depicted in FIG. **14**.

[0136] The tool element abutment face **174** extends in parallel or substantially in parallel with the base body abutment face **64** and with the lifting wedge abutment face **72**. In the embodiment depicted in the Figures, the tool element abutment face **174** lies in the abutment face plane **68**.

[0137] The tool element abutment face **174** and the tool element sliding face **170** intersect in a front edge **176** of the second tool element **142**. The front edge **176** and the wedge edge **78** together define a plane **178**, which extends in parallel with the first leg **48**.

[0138] In the embodiment depicted, the tool apparatuses **12** comprise two second tool elements **142**. They are arranged or formed mirror-symmetrically to the midplane **38**.

[0139] A respective cutout **180** is formed between the first tool element **24** and the two second tool elements **142**. A cutout width **182** corresponds to a distance between the tool elements **24** and **142**. Thus, the first tool element **24** is arranged or formed between the two second tool elements **142**.

[0140] The locking bracket **26** comprises two legs **184**, which extend from the transverse web **36** in parallel with one another and have a leg width **186** in a direction parallel with the transverse web **36**. The cutout width **182** is selected such that the legs **184** are each able to engage into one of the two cutouts **180**. The leg width **186** is thus smaller than the cutout width **182**.

[0141] The cutouts **180** each extend from free ends of the tool elements **24** and **142** up to the support element **40**.

[0142] For being brought into positive-locking engagement with the swivel bracket holding elements **144**, a coupling receptacle **188** is formed on each of the two second tool elements **142** of each tool apparatus **12**. They have an inner contour that is adapted to an outer contour of the swivel bracket holding elements **144**, such that they are able to dip into the coupling receptacles **188** when the tool apparatus **12** is oriented and moved in parallel with the base **164** of the sieve basket **22**.

[0143] The coupling receptacles **144** are each arranged or formed on the tool element top side **166**.

[0144] The coupling receptacles **188** of the two second tool elements **142** of the same tool apparatus **12** define a common coupling receptacle longitudinal axis **190**. They extend in parallel or substantially in parallel with the swivel bracket pivot axis **156** when a swivel bracket holding element **144** is accommodated in each coupling receptacle **188** of the two second tool elements **142**.

[0145] A transverse stop **192** is arranged or formed on each coupling receptacle **188** for delimiting a movement of the tool apparatus **12** relative to a sterile goods container **14** or to the sieve basket **22** in a direction parallel with the swivel bracket pivot axis **156** when the swivel bracket holding elements **144** are accommodated in the coupling receptacles **188**. The transverse stops **192** delimit the coupling receptacles **188** laterally in each case in the direction toward the first tool element **24**.

[0146] The tool element sliding face **170** of the second tool element **142** serves to lift the swivel bracket **154** of the sieve basket **22**. The tool element abutment face **174** and the tool element sliding face **170** enclose a tool element wedge angle **194**. In the embodiment depicted in the Figures, the tool element wedge angle **194** corresponds to the base body wedge angle **66**.

[0147] Furthermore, the tool element sliding face **170** and the base body sliding face **58** define a common sliding face plane **196**. The tool element bottom side face **172** and the base body bottom side face **60** also lie in a common plane.

[0148] In the embodiment depicted in the Figures, the tool apparatuses **12** are formed in one piece, namely monolithically.

[0149] They are made of a metallic material, namely by being machined from a solid material block. In the embodiment described, the metallic material is an instrument steel that is sterilizable by superheated steam. However, other

metallic materials that are corrosion-resistant are also suitable for forming the tool apparatuses **12**.

[0150] In particular, a method for machine handling of sterile goods containers **14** can be performed with the described handling system **10** for sterile goods containers. Here, in particular, it may be a sterile goods container **14** as described above, which has a sterile goods container lid **20** and a sterile goods container tray **16**.

[0151] When a sterile goods container **14** is provided in the closing position, using the handling system **10** for sterile goods containers, the sterile goods container **14** can first be transferred from the closing position described above into an unlocking position. To achieve this, the tool apparatuses **12** are each brought into engagement with one of the two locking brackets **26** for pivoting the same from the closing position, in which the locking brackets **26** are oriented in parallel or substantially in parallel with the lid top side **32**, about the pivot axis **32** into an unlocking position, in which the sterile goods container lid **20** and the sterile goods container tray **16** are unlocked.

[0152] FIG. **1** shows the sterile goods container **14** in the closing position. The two tool apparatuses **12** are brought up to the locking brackets **26** by the handling apparatus **106** in such a way, either simultaneously or one after the other, that the lifting wedges **70** engage under the transverse webs **36** of the locking brackets **26**, as is schematically depicted in FIGS. **2** to **4**.

[0153] When the tool apparatuses **12** that with their lifting wedges **70** are in contact with the transverse webs **36** are displaced in parallel with the lid top side **32** in the direction toward the pivot axis **30**, the transverse web **36** first slides on the lifting wedge sliding face **74** and when advanced further is moved over the edge **82** onto the base body sliding face **58**. When the tool apparatus **12** is advanced further such that the transverse web **36** passes the first intersection line **96**, the transverse web **36** snaps into the latching recess **90** and comes to rest on the latching face **94**.

[0154] When the tool apparatus **12** is now moved back somewhat in the direction toward the other tool apparatus **12**, the transverse web **36** is tensioned against the retaining face **92**.

[0155] In the described manner, the sterile goods container lid **20** is held and secured in a clamping manner on the two tool apparatuses **12**.

[0156] The sterile goods container lid **20** can now be lifted from the sterile goods container tray **16** by the handling apparatus **106** and is placed at a desired storage location.

[0157] To release the sterile goods container lid **20** from the two tool apparatuses **12**, they are moved relative to the sterile goods container lid **20** in the reverse direction as when being brought into engagement as described above.

[0158] The sliding of the transverse web **36** on the first tool elements **24** is depicted in FIGS. **5** and **6**. FIGS. **7** and **8** show the engagement of the transverse web **36** into the latching recess **90** on the first tool element **24**. FIG. **7** shows the sterile goods container lid **20** being lifted from the sterile goods container tray **16**.

[0159] The sterile goods container **14** that is now open provides access to the sieve basket **22**. In order to lift said sieve basket **22** out of the receiving space **18** using the handling apparatus **106**, the two tool apparatuses **12**, as described and depicted as an example in FIGS. **11** to **14**, are brought with the tool element sliding faces **170** into contact with the handle portions **158**. When the tool apparatuses **12** are then moved in parallel with the base **164** in the direction toward the swivel bracket holding elements **144**, the swivel bracket holding elements **144** are able to dip into the coupling receptacles **188** provided therefor. The four total swivel bracket holding elements **144** are held in said coupling receptacles **188** by the weight of the sieve basket **22**.

[0160] The sieve basket **22** is secured in a plane parallel to the base **164** against a movement relative to the handling apparatus **106**, on the one hand by the configuration of the coupling receptacles **188**, which each point in pairs in different directions, namely toward the two face sides **146** of the sieve basket **22**, and on the other hand by the transverse stops **192**, which prevent a movement of the sieve basket **22** relative to the handling apparatus **106** in parallel with the swivel bracket pivot axis **156**.

[0161] When the tool apparatuses **12** are moved in the direction toward the face sides **146** of the sieve basket **22**, the handle portions **158** slide on the tool element sliding faces **170**. It is not possible for the handle portion **158** to dip into the latching receptacle **90**, because the handle portion **158** has a length such that it is always supported on the two tool element sliding faces **170** on both sides of the first tool element **24** arranged between the second tool elements **142**.

[0162] The sieve basket **22** coupled to the tool apparatuses **12** as described can now be lifted out of the sterile goods container tray **16**, as depicted schematically in FIGS. **11** and **12**. In a next step, it can be placed at a location where its contents can be removed by a user, either by hand or by machine with a further handling apparatus.

[0163] The handling system **10** for sterile goods containers makes it possible, in particular, to fully automatically handle sterile goods containers **14** and also sieve baskets **22** accommodated by said containers.

[0164] The sterile goods containers **14** and the sieve baskets **22** may optionally be optically and/or electronically marked so that the correspondingly configured handling system **10** for sterile goods containers is able to automatically detect their size and position and/or orientation in space and thus is able to automatically handle all components of the sterile goods container **14** accordingly.

[0165] The described handling system **10** for sterile goods containers simplifies and facilitates a handling of sterile goods containers **14**, in particular for personnel in reprocessing facilities, as are provided, e.g., in hospitals or corresponding companies that are specialized in the cleaning and sterilization of sterile goods containers **14** and their contents.

REFERENCE NUMERAL LIST

[0166] **10** handling system for sterile goods containers
[0167] **12** tool apparatus
[0168] **14** sterile goods container
[0169] **16** sterile goods container tray
[0170] **18** receiving space
[0171] **20** sterile goods container lid
[0172] **22** sieve basket
[0173] **24** first tool element
[0174] **26** locking bracket
[0175] **28** container closure
[0176] **30** pivot axis
[0177] **32** lid top side
[0178] **34** engagement portion
[0179] **36** transverse web
[0180] **38** midplane

[0181] **40** support element
[0182] **42** support element longitudinal axis
[0183] **44** support element top side
[0184] **46** angle piece
[0185] **48** first leg
[0186] **50** second leg
[0187] **52** tool element base body
[0188] **54** base body top side
[0189] **56** base body bottom side
[0190] **58** base body sliding face
[0191] **60** base body bottom side face
[0192] **62** base body angle
[0193] **64** base body abutment face
[0194] **66** base body wedge angle
[0195] **68** abutment face plane
[0196] **70** lifting wedge
[0197] **72** lifting wedge abutment face
[0198] **74** lifting wedge sliding face
[0199] **76** rear side
[0200] **78** wedge edge
[0201] **80** wedge angle
[0202] **82** edge
[0203] **84** lifting wedge sliding face length
[0204] **86** lifting wedge sliding face width
[0205] **88** base body width
[0206] **90** latching recess
[0207] **92** retaining face
[0208] **94** latching face
[0209] **96** first intersection line
[0210] **98** second intersection line
[0211] **100** latching face width
[0212] **102** web width
[0213] **104** engagement portion width
[0214] **106** handling apparatus
[0215] **108** actuator device
[0216] **110** robot
[0217] **112** first interface device
[0218] **114** face side
[0219] **116** blind hole
[0220] **118** first interface element
[0221] **120** screw
[0222] **122** adapter element
[0223] **124** bore
[0224] **126** second interface element
[0225] **128** second interface device
[0226] **130** base body
[0227] **132** drive
[0228] **134** drive unit
[0229] **136** linear drive
[0230] **138** screw
[0231] **140** longitudinal axis
[0232] **142** second tool element
[0233] **144** swivel bracket holding element
[0234] **146** face side
[0235] **148** inner space
[0236] **150** receptacle
[0237] **152** end portion
[0238] **154** swivel bracket
[0239] **156** swivel bracket pivot axis
[0240] **158** handle portion
[0241] **160** connecting portion
[0242] **162** support
[0243] **164** base
[0244] **166** tool element top side
[0245] **168** tool element bottom side
[0246] **170** tool sliding face
[0247] **172** tool element bottom side face
[0248] **174** tool element abutment face
[0249] **176** front edge
[0250] **178** plane
[0251] **180** cutout
[0252] **182** cutout width
[0253] **184** leg
[0254] **186** leg width
[0255] **188** coupling receptacle
[0256] **190** coupling receptacle longitudinal axis
[0257] **192** transverse stop
[0258] **194** tool element wedge angle
[0259] **196** sliding face plane

1. A handling system for sterile goods containers, the handling system comprising:

at least one tool apparatus for opening sterile goods containers,

the at least one tool apparatus having at least one first tool element comprising a lifting wedge,

the at least one first tool element being engageable with a locking bracket mounted on a sterile goods container lid of a sterile goods container so as to be pivotable about a pivot axis,

the at least one first tool element being configurable in a storage position to be oriented parallel to or substantially parallel to a lid top side of the sterile goods container lid for locking the sterile goods container lid on a sterile goods container tray of the sterile goods container in a closing position in which the sterile goods container lid closes the sterile goods container tray, and

the lifting wedge being configured for engaging under the locking bracket.

2. The handling system according to claim **1**, wherein:

the lifting wedge has a lifting wedge abutment face and a lifting wedge sliding face,

the lifting wedge abutment face is configured to be oriented in parallel with the lid top side, and

the lifting wedge abutment face and the lifting wedge sliding face enclose a wedge angle.

3. The handling system according to claim **2**, wherein the lifting wedge sliding face is of planar or curved configuration.

4. The handling system according to claim **2**, wherein the wedge angle has a value in a range of about 10° to about 50°.

5. The handling system according to claim **2**, wherein:

the lifting wedge abutment face and the lifting wedge sliding face intersect at a wedge edge,

the lifting wedge sliding face has a lifting wedge sliding face length parallel to the wedge edge and a lifting wedge sliding face width perpendicular to the wedge edge, and

the lifting wedge sliding face length is greater than the lifting wedge sliding face width.

6. The handling system according to claim **5**, wherein the at least one tool apparatus is of symmetrical configuration relative to a midplane extending perpendicularly to the wedge edge.

7. The handling system according to claim **5**, wherein:

the at least one first tool element has a tool element base body, and

the lifting wedge is arranged or formed distally on the tool element base body.

8. The handling system according to claim **7**, wherein:

the tool element base body has a base body abutment face and a base body sliding face for lifting and opening the locking bracket, and

the base body abutment face and the base body sliding face enclose a base body wedge angle.

9. The handling system according to claim **8**, wherein:

the tool element base body has a base body top side that defines the base body sliding face, and

the base body top side defines a latching recess that is recessed relative to the base body sliding face.

10. The handling system according to claim **7**, wherein:

the locking bracket has an engagement portion,

the engagement portion defines an engagement portion width in parallel with the pivot axis,

the lifting wedge sliding face has a lifting wedge sliding face length,

the tool element base body has a base body width parallel to the wedge edge, and

the lifting wedge sliding face length and the base body width are smaller than the engagement portion width.

11. The handling system according to claim **1**, wherein the at least one tool apparatus comprises a first interface device for directly or indirectly coupling to a mechanical handling apparatus in a force-locking and/or positive-locking manner for moving the at least one tool apparatus.

12. The handling system according to claim **11**, wherein:

the mechanical handling apparatus comprises an actuator device, and

the at least one tool apparatus comprises two tool apparatuses that are directly or indirectly held on the actuator device with lifting wedges pointing away from one another or toward one another.

13. The handling system according to claim **1**, wherein the at least one tool apparatus comprises at least one second tool element configured to be brought into positive-locking engagement with a swivel bracket of a sieve basket that is insertable into a sterile goods container and/or with a swivel bracket holding element holding the swivel bracket on the sieve basket so as to be pivotable about a swivel bracket pivot axis, the at least one first tool element and the at least one second tool element being separated by a cutout.

14. The handling system according to claim **13**, wherein the at least one second tool element comprises a coupling receptacle configured to be brought into positive-locking engagement with the swivel bracket holding element of the sieve basket.

15. The handling system according to claim **14**, wherein the at least one second tool element comprises two second tool elements.

16. The handling system according to claim **15**, wherein a transverse stop is arranged or formed on each coupling receptacle for delimiting a movement of the at least one tool apparatus relative to the sterile goods container in a direction parallel with the swivel bracket pivot axis when swivel bracket holding elements are accommodated in the coupling receptacles.

17. The handling system according to claim **1**, wherein the at least one tool apparatus is formed in a one-piece monolithic body of unitary construction.

18. A method for machine handling of sterile goods containers, the sterile goods containers each having a sterile goods container tray and a sterile goods container lid, each sterile goods container lid supporting two locking brackets that are pivotable about a pivot axis for locking the sterile goods container lid on the sterile goods container tray in a closing position, the method comprising the steps of:

utilizing the handling system according to claim **1**;

moving the at least one tool apparatus into engagement with a locking bracket of one of the sterile goods containers; and

pivoting the locking bracket from the closing position, in which the locking bracket is oriented in parallel or substantially in parallel with a lid top side of the sterile goods container lid, about the pivot axis into an unlocking position, in which the sterile goods container lid and the sterile goods container tray are unlocked.

19. The method according to claim **18**, wherein:

a) a transverse web of the locking bracket is accommodated in a latching recess on the at least one first tool element and held under tension against a retaining face,

and/or

b) a sieve basket accommodated in the sterile goods container is automatically removed with the handling system.

20. A handling system for sterile goods containers, the handling system comprising:

at least one tool apparatus for opening sterile goods containers,

the at least one tool apparatus having at least one first tool element comprising a lifting wedge,

the at least one first tool element being engageable with a locking bracket mounted on a sterile goods container lid of a sterile goods container so as to be pivotable about a pivot axis,

the at least one first tool element being configurable in a storage position to be oriented parallel to or substantially parallel to a lid top side of the sterile goods container lid for locking the sterile goods container lid on a sterile goods container tray of the sterile goods container in a closing position in which the sterile goods container lid closes the sterile goods container tray,

the lifting wedge being configured for engaging under the locking bracket, and

the at least one tool apparatus having at least one second tool element configured to be brought into positive-locking engagement with a swivel bracket of a sieve basket that is insertable into a sterile goods container and/or with a swivel bracket holding element holding the swivel bracket on the sieve basket so as to be pivotable about a swivel bracket pivot axis.

* * * * *