US 20250285906A1

(19) United States
(12) Patent Application Publication
OKABE et al.
(10) Pub. No.: US 2025/0285906 A1
(43) Pub. Date: Sep. 11, 2025

(54) **SUBSTRATE PROCESSING METHOD AND SUBSTRATE PROCESSING APPARATUS**

(71) Applicant: **SCREEN Holdings Co., Ltd.**, Kyoto (JP)

(72) Inventors: **Ryo OKABE**, Kyoto (JP); **Hiromichi KABA**, Kyoto (JP)

(21) Appl. No.: **19/075,385**

(22) Filed: **Mar. 10, 2025**

(30) **Foreign Application Priority Data**

Mar. 11, 2024 (JP) 2024-037143

Publication Classification

(51) **Int. Cl.**
H01L 21/687 (2006.01)
B08B 3/04 (2006.01)
H01L 21/67 (2006.01)
H01L 21/683 (2006.01)

(52) **U.S. Cl.**
CPC ***H01L 21/68728*** (2013.01); ***B08B 3/04*** (2013.01); ***H01L 21/6838*** (2013.01); *H01L 21/67051* (2013.01); *H01L 21/6708* (2013.01)

(57) **ABSTRACT**

A substrate processing method includes a liquid process to supply a processing liquid to a surface of a substrate while holding the substrate in a horizontal state by a center chuck that holds the substrate in a lower surface center portion of the substrate. The method includes a drying process to spin off the liquid on the surface of the substrate by rotating the substrate around a rotation axis along an up/down direction while holding the substrate in a horizontal state by the center chuck and gripping the substrate at an outer circumferential portion of the substrate by an outer circumferential chuck including a plurality of grippers each having a side surface contact portion that comes into contact with an outer circumferential portion side surface of the substrate.

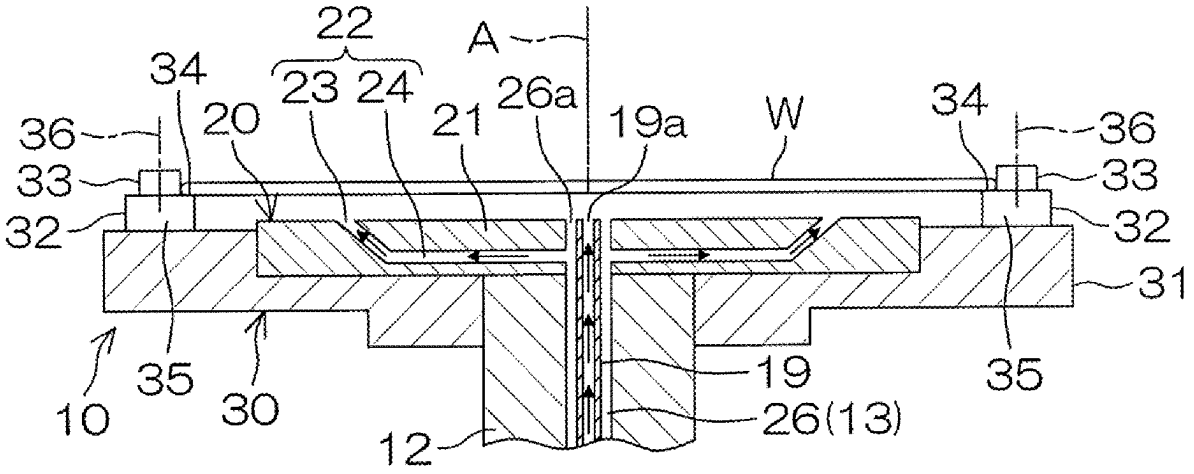

FIG. 1

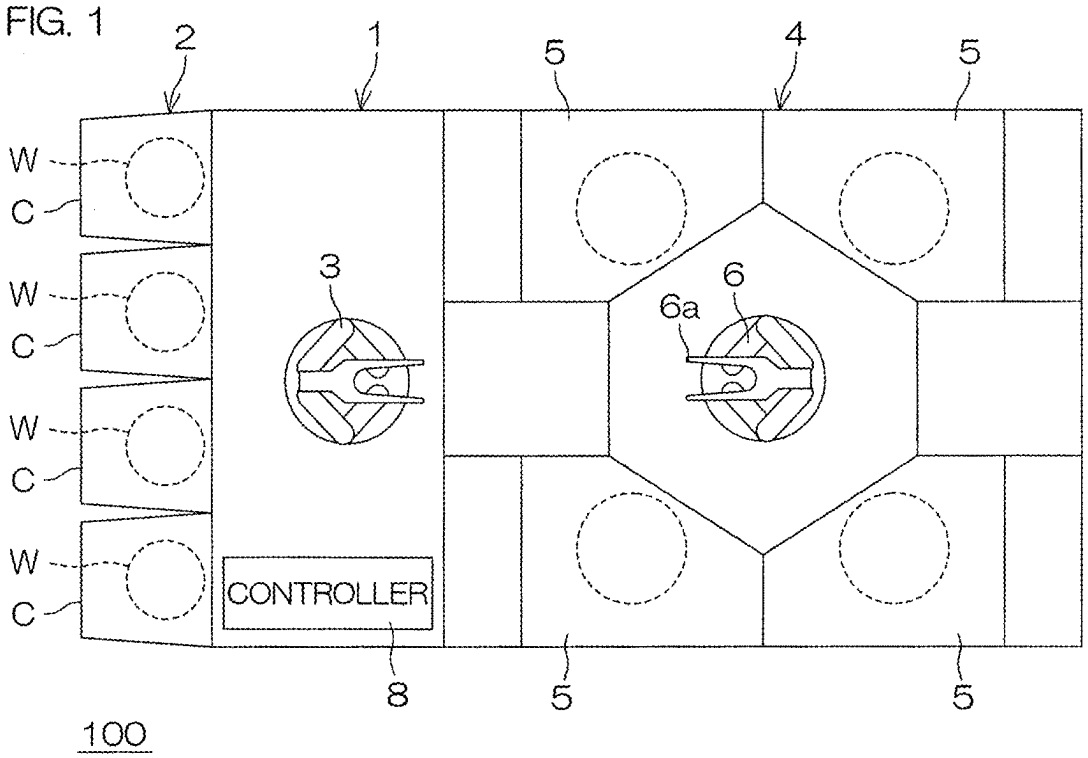

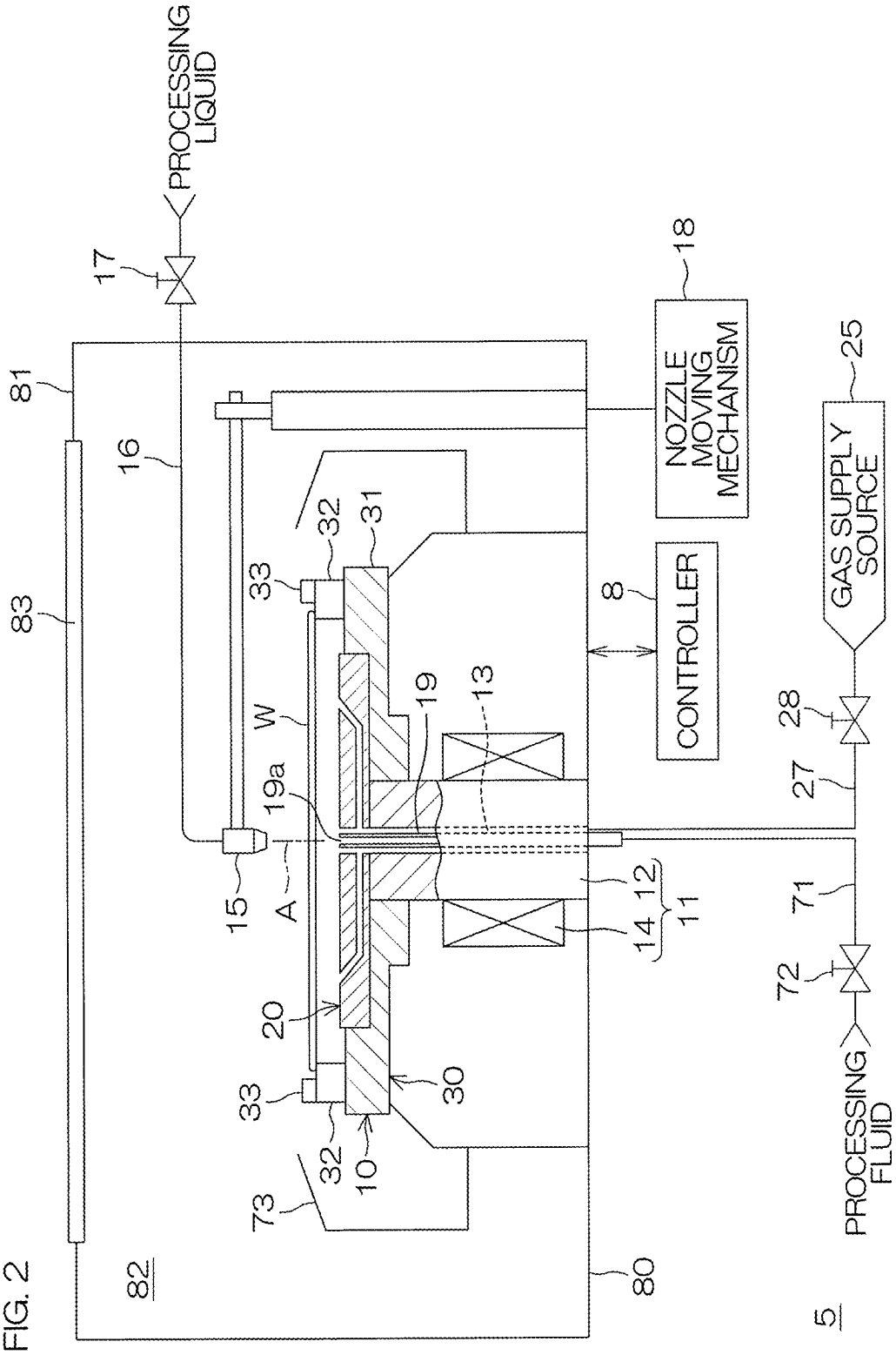
PROCESSING LIQUID
17
81
16
83
82
NOZZLE MOVING MECHANISM
18
CONTROLLER
8
GAS SUPPLY SOURCE
25
28
27
32
31
33
W
19
13
19a
A
15
12
11
14
71
72
20
30
10
73
80
PROCESSING FLUID
5

FIG. 2

FIG. 3

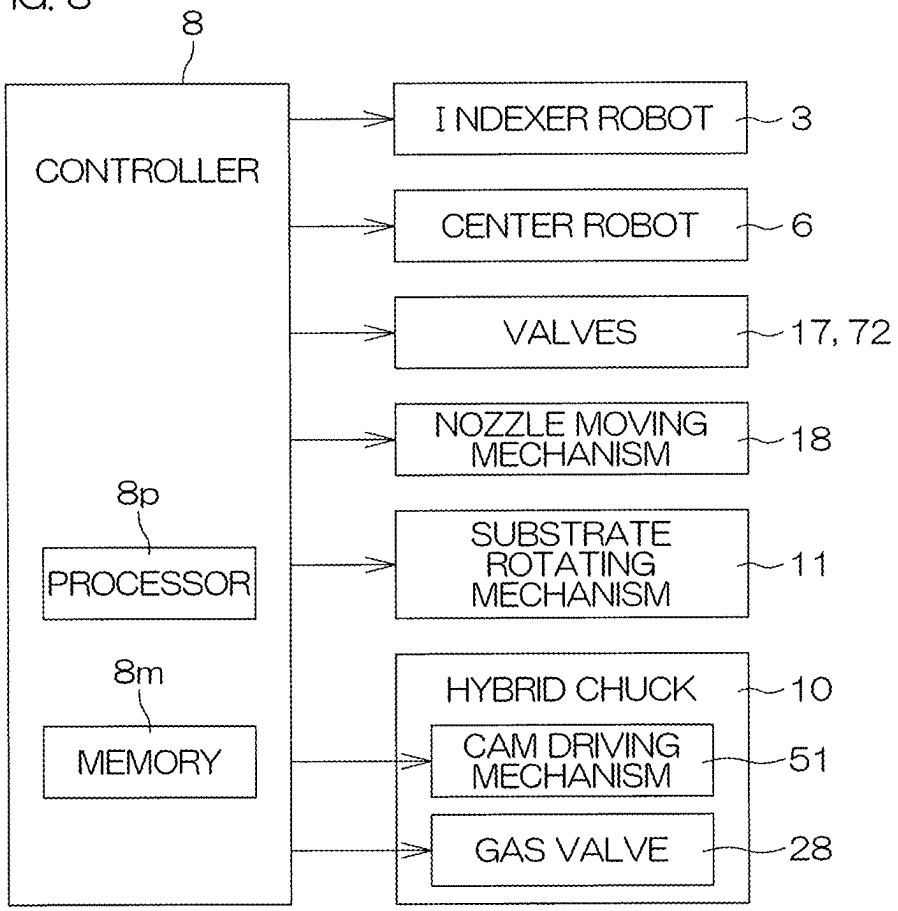
8
CONTROLLER
8p
PROCESSOR
8m
MEMORY
INDEXER ROBOT
3
CENTER ROBOT
6
VALVES
17, 72
NOZZLE MOVING MECHANISM
18
SUBSTRATE ROTATING MECHANISM
11
HYBRID CHUCK
10
CAM DRIVING MECHANISM
51
GAS VALVE
28

FIG. 4A

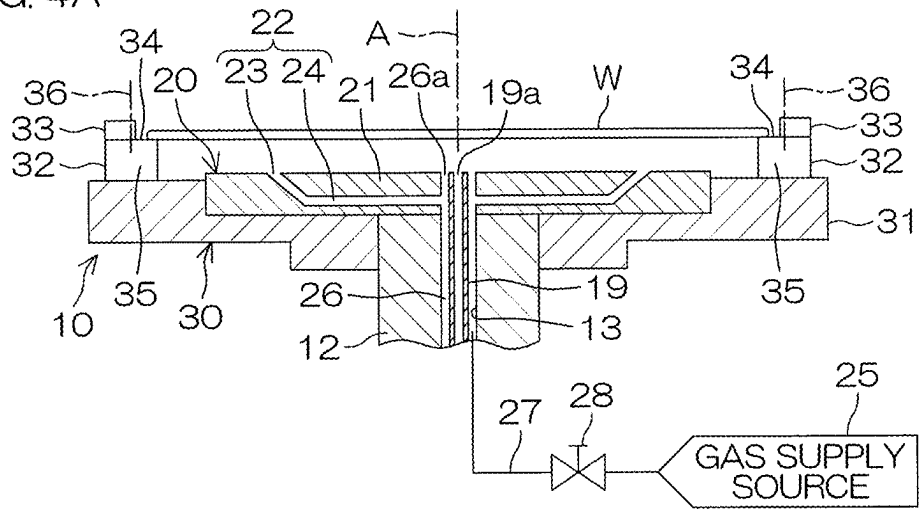
22
A
34
23 24
36
20
21
26a
19a
W
34
36
33
33
32
32
31
10
35
30
26
19
35
12
13
25
27
28
GAS SUPPLY SOURCE

FIG. 4B

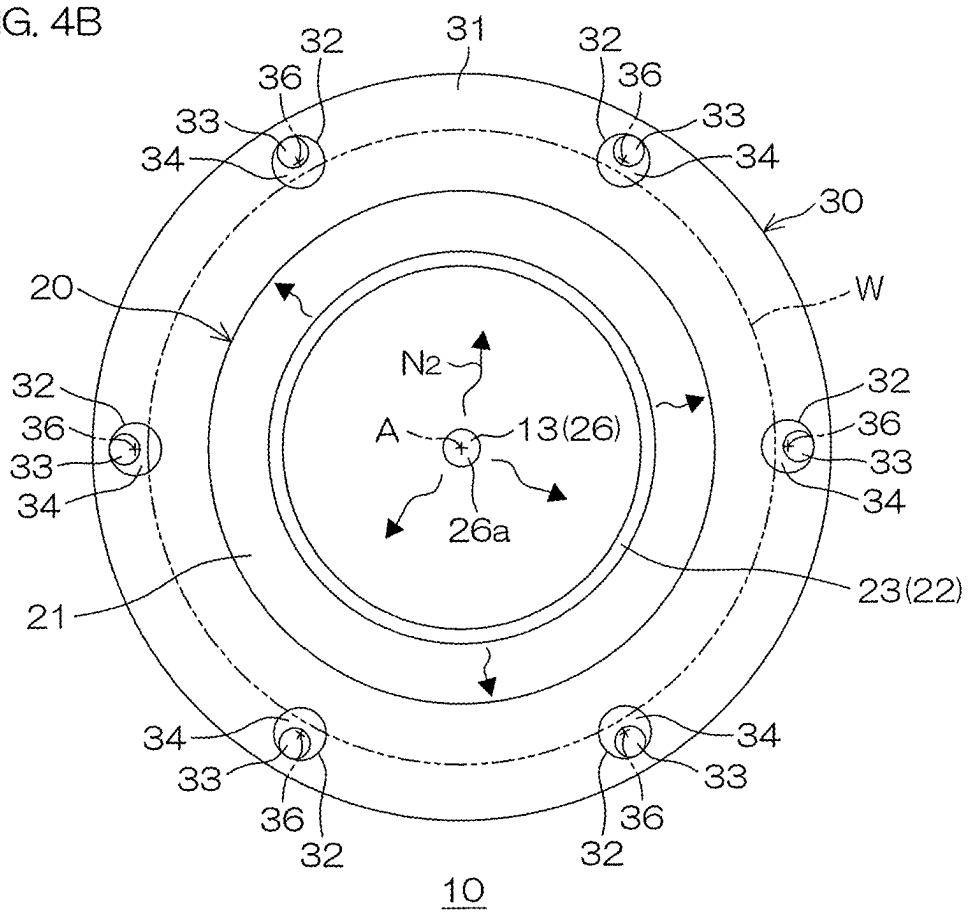
32
31
32
36
36
33
33
34
34
30
20
W
N2
32
32
36
A
13(26)
36
33
33
34
34
26a
23(22)
21
34
34
33
33
36
36
32
32
10

FIG. 5A

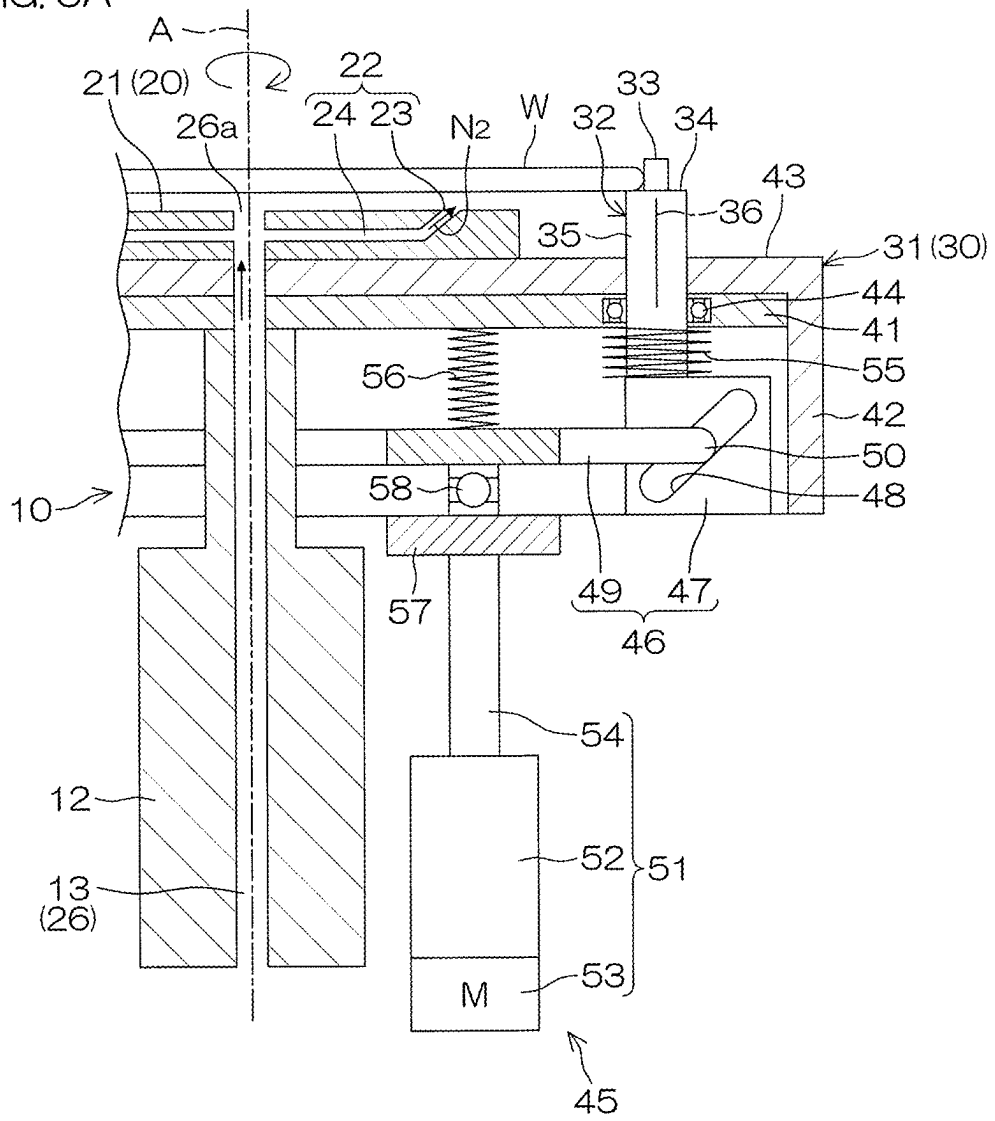
A
21 (20)
22
24 23
26a
N2
W
32
33
34
43
36
35
31 (30)
44
41
56
55
42
50
58
48
10
57
49
47
46
54
12
52
51
13
(26)
M
53
45

FIG. 5B

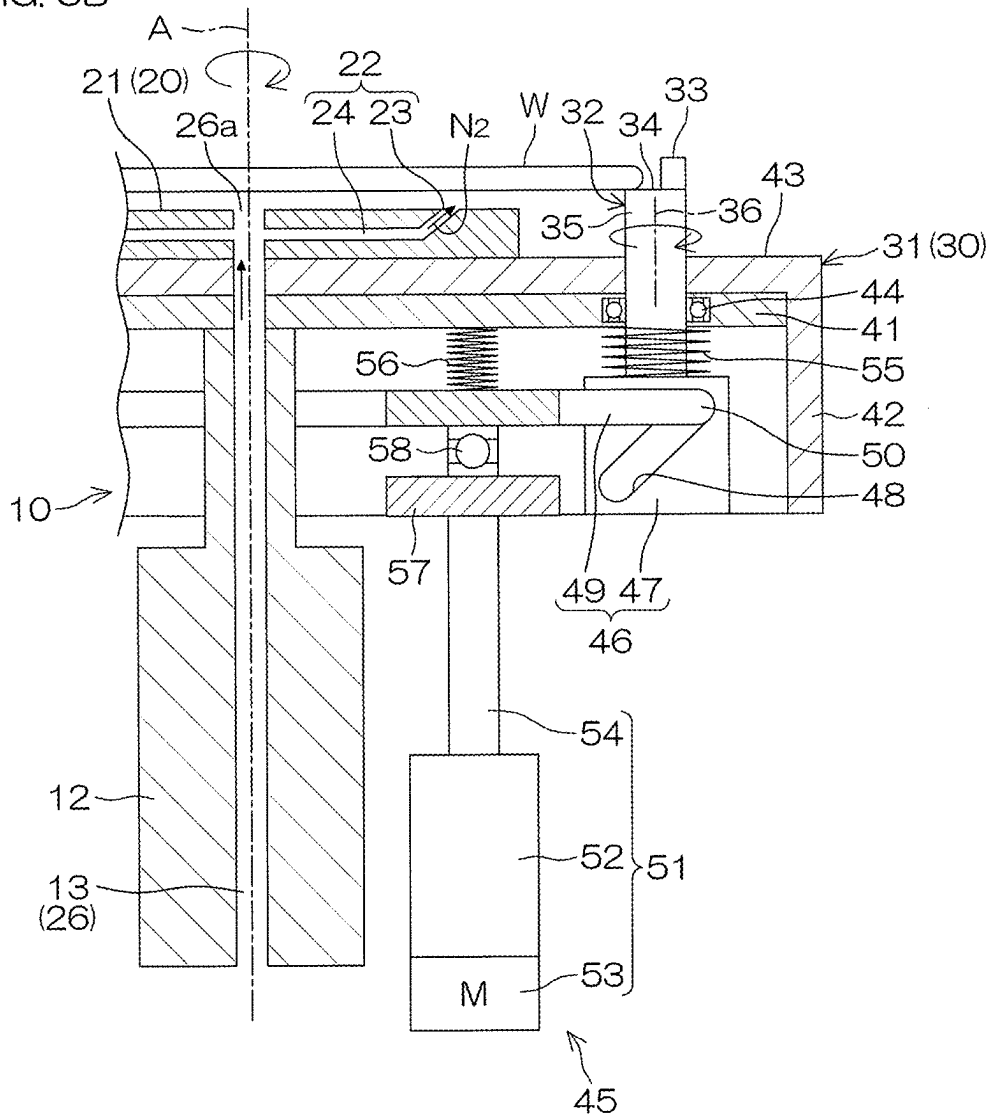
A
21 (20)
22
24 23
26a
N2
W
32
34
33
43
35
36
31 (30)
44
41
56
55
42
58
50
48
10
57
49 47
46
54
12
52
51
13
(26)
M
53
45

FIG. 5C

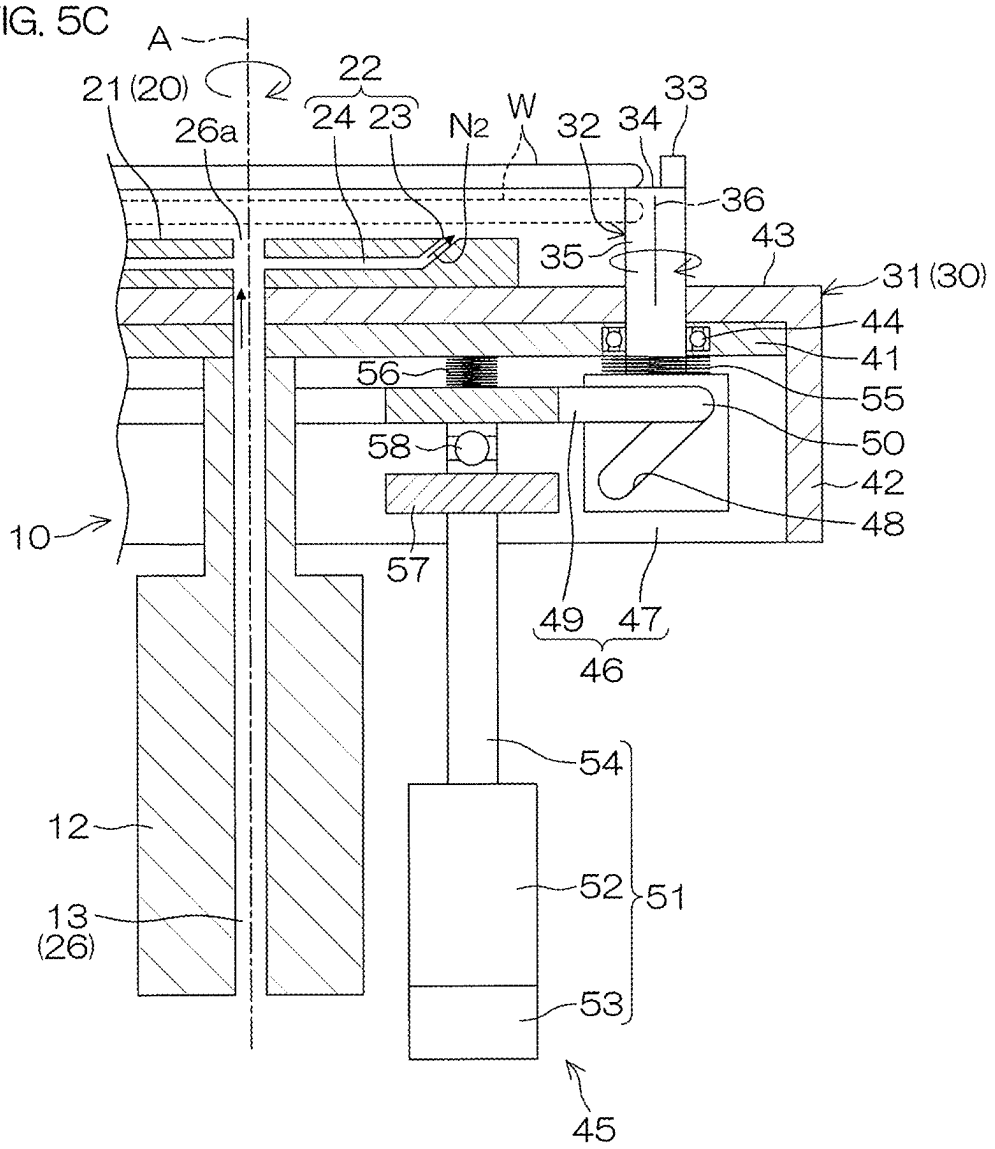
A
21 (20)
22
24 23
26a
N2
W
32
34
33
36
35
43
31 (30)
44
41
56
55
50
58
42
48
10
57
49
47
46
54
12
52
51
13
(26)
53
45

FIG. 6

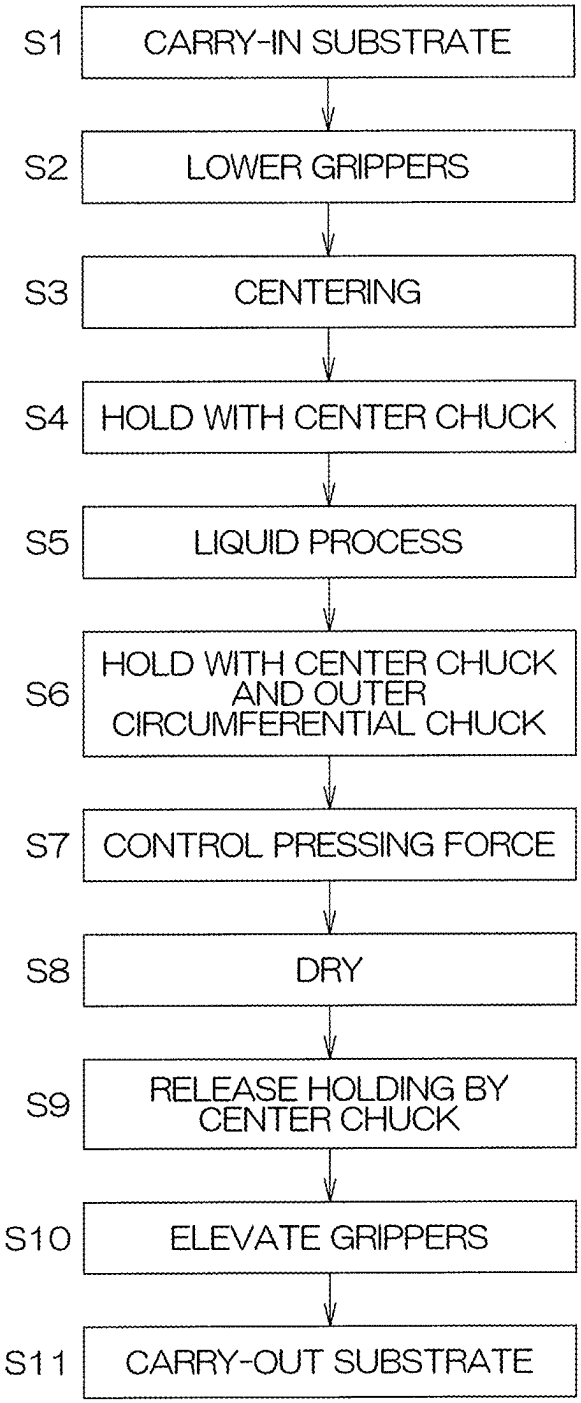
S1
CARRY-IN SUBSTRATE
S2
LOWER GRIPPERS
S3
CENTERING
S4
HOLD WITH CENTER CHUCK
S5
LIQUID PROCESS
S6
HOLD WITH CENTER CHUCK AND OUTER CIRCUMFERENTIAL CHUCK
S7
CONTROL PRESSING FORCE
S8
DRY
S9
RELEASE HOLDING BY CENTER CHUCK
S10
ELEVATE GRIPPERS
S11
CARRY-OUT SUBSTRATE

FIG. 7A

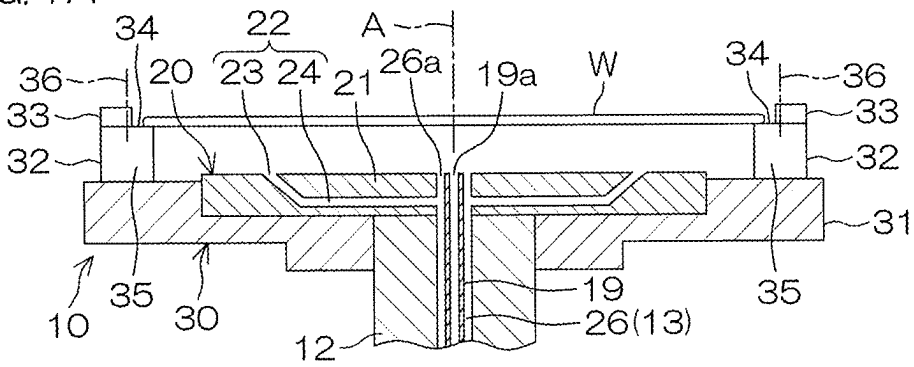
34
22
A
36
20
23 24
21
26a
19a
W
34
36
33
33
32
32
31
10
35
30
12
19
26(13)
35

FIG. 7B

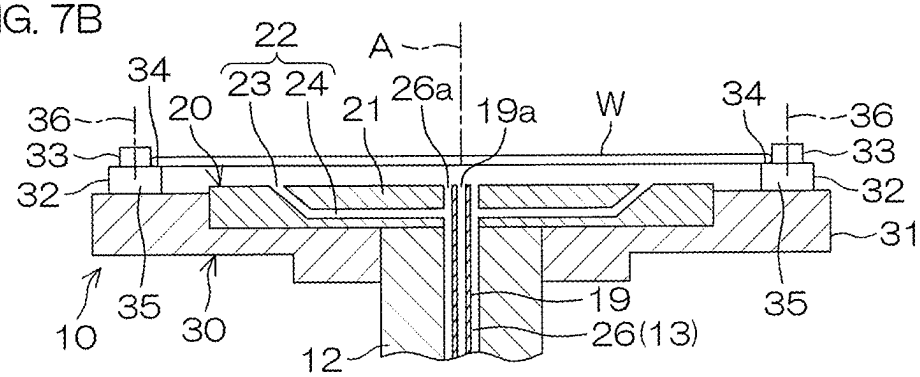
22
A
34
23 24
36
20
21
26a
19a
W
34
36
33
33
32
32
31
10
35
30
12
19
26(13)
35

FIG. 7C

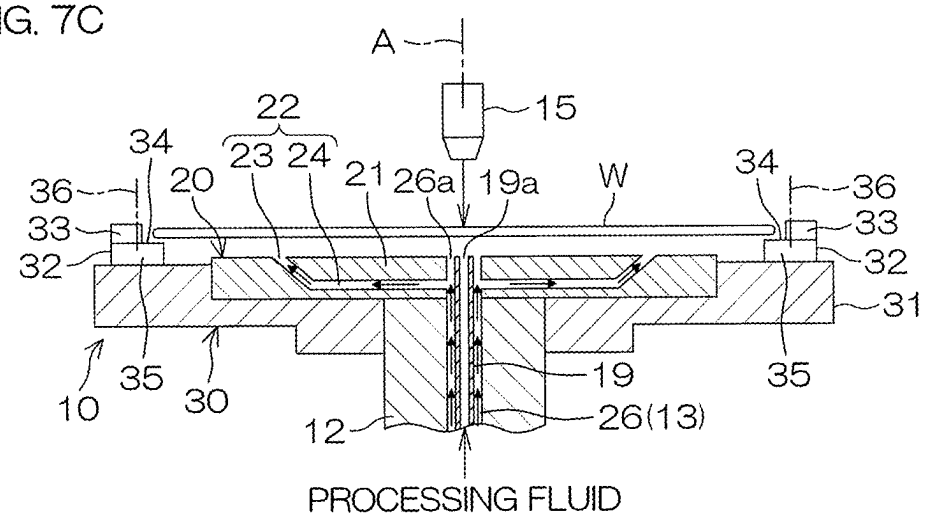
A
15
22
23 24
34
20
21
26a
19a
W
34
36
36
33
33
32
32
31
35
30
10
19
35
12
26(13)
PROCESSING FLUID

FIG. 7D

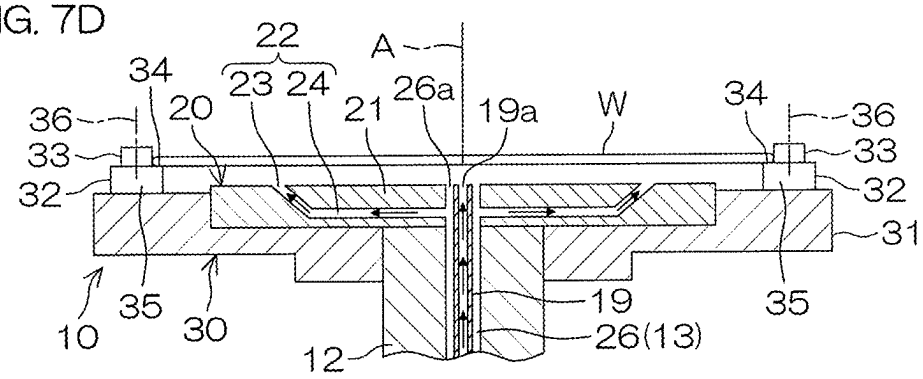
22
A
34
23 24
26a
20
21
19a
W
34
36
36
33
33
32
32
31
35
30
10
19
35
12
26(13)

FIG. 8A

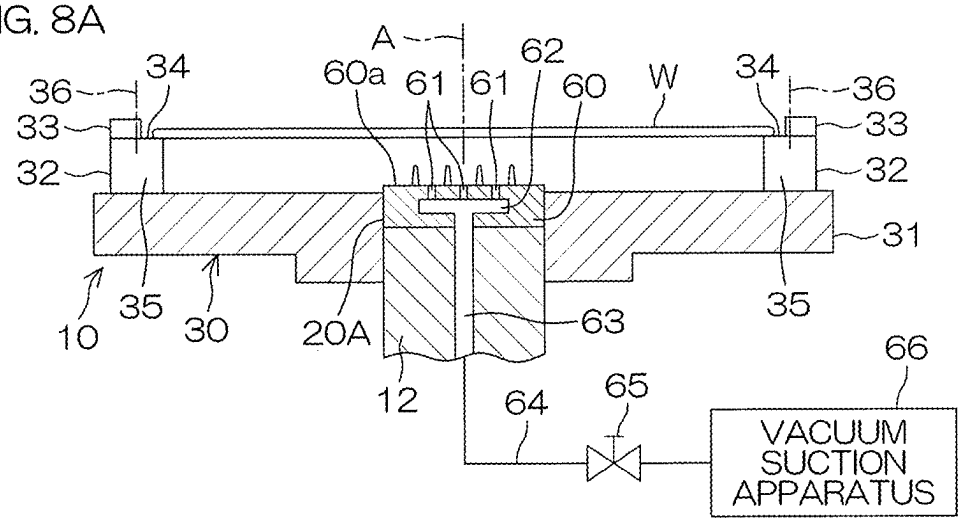
A
62
60a
61
61
60
W
34
34
36
36
33
33
32
32
31
35
35
10
30
20A
63
12
64
65
66
VACUUM SUCTION APPARATUS

FIG. 8B

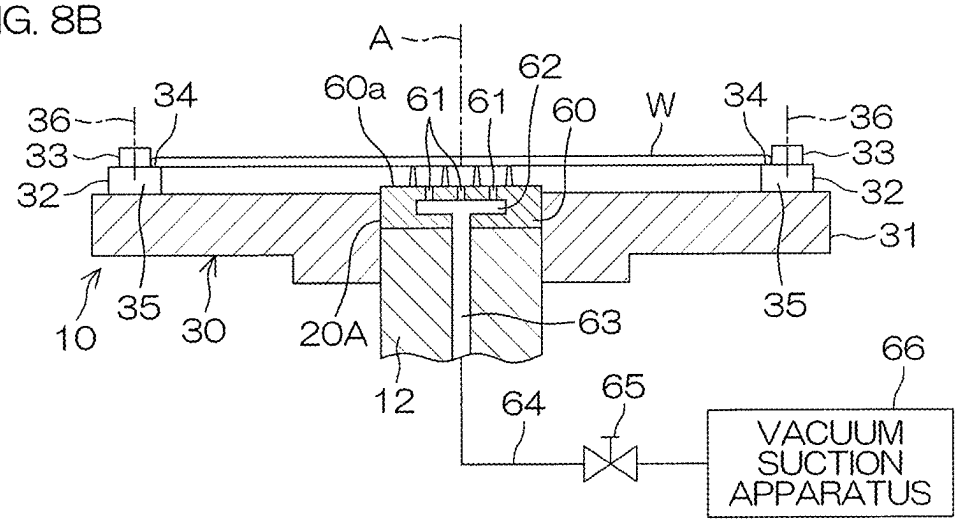
A
62
60a
61
61
60
W
34
34
36
36
33
33
32
32
31
35
35
10
30
20A
63
12
64
65
66
VACUUM SUCTION APPARATUS

FIG. 8C

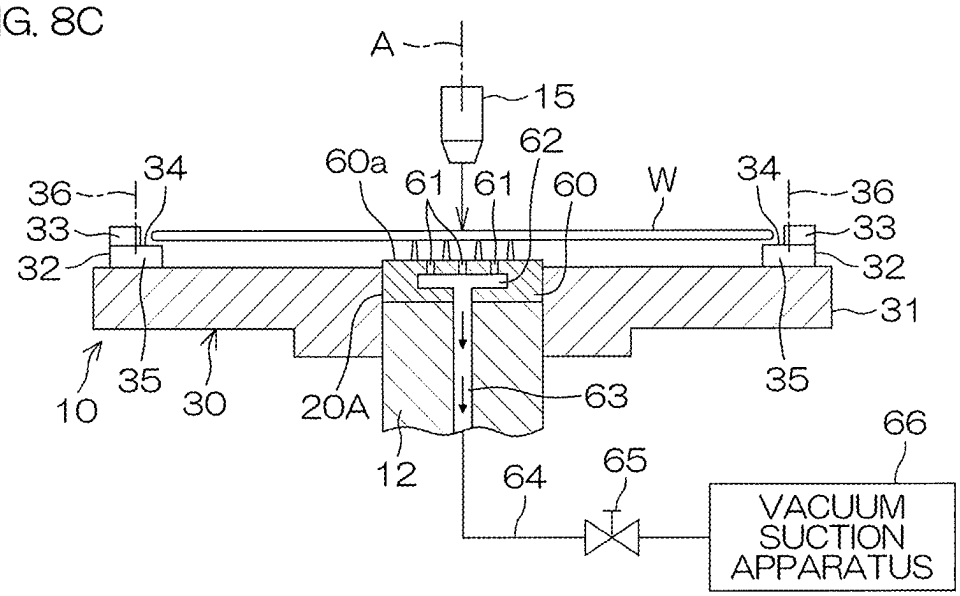
A
15
62
60a
61
61
60
W
34
34
36
36
33
33
32
32
31
35
35
10
30
20A
63
66
12
64
65
VACUUM
SUCTION
APPARATUS

FIG. 8D

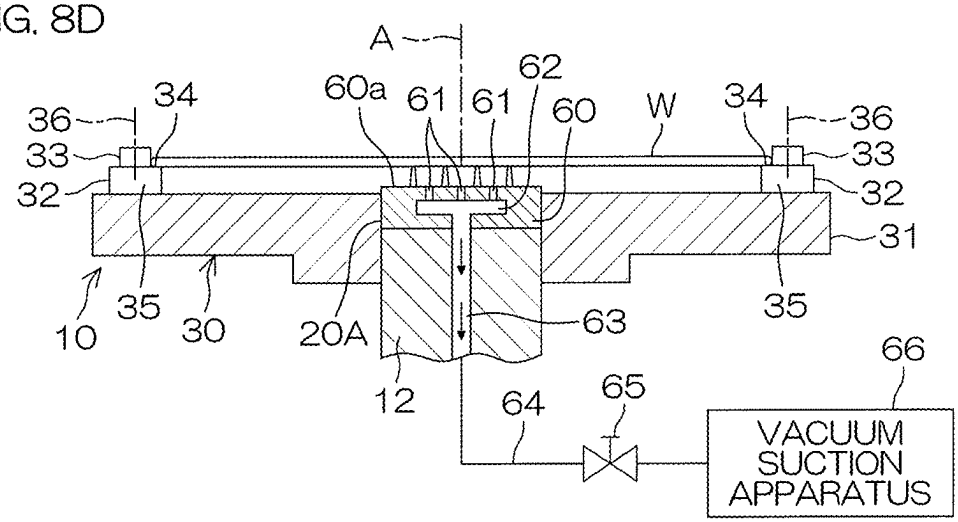
A
62
60a
61
61
60
W
34
34
36
36
33
33
32
32
31
35
35
10
30
20A
63
66
12
64
65
VACUUM
SUCTION
APPARATUS

FIG. 9A

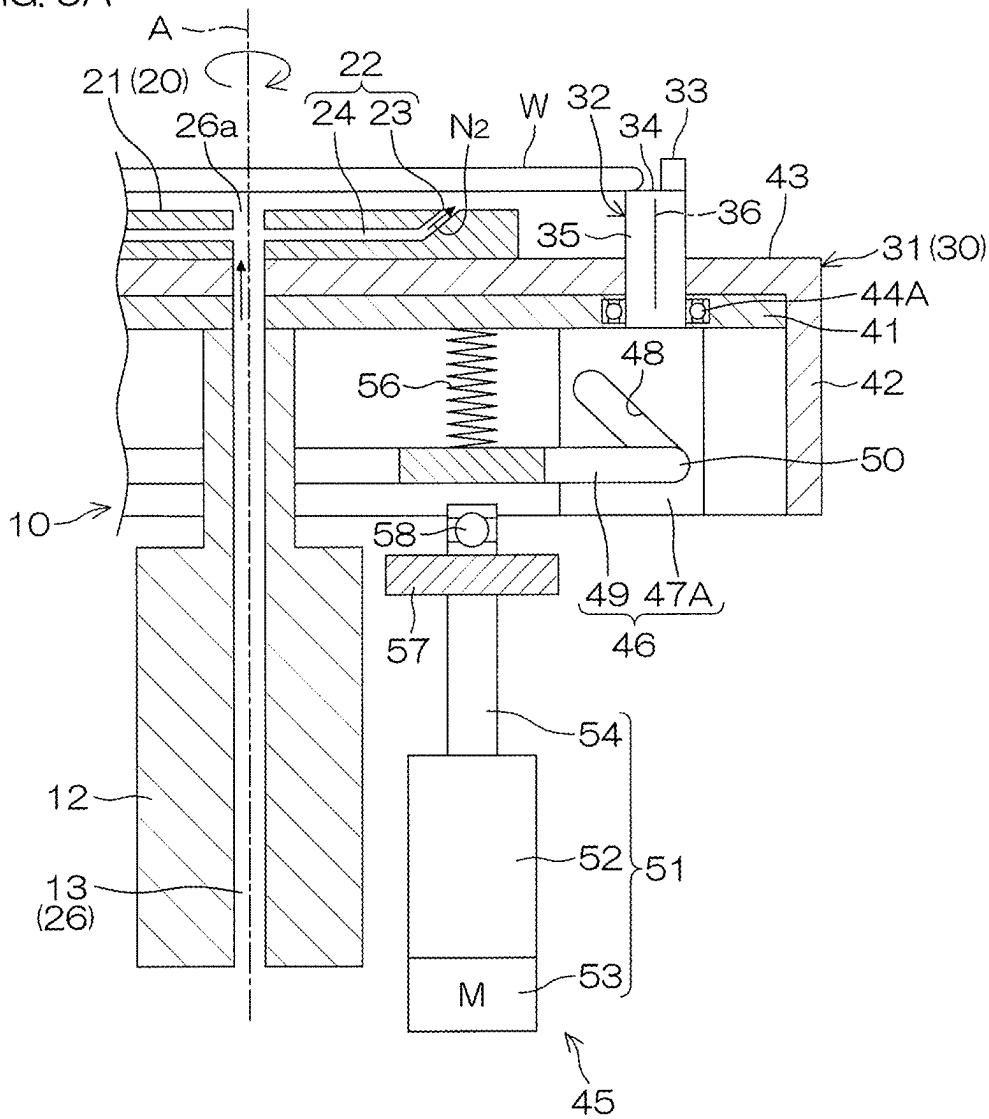
A
21 (20)
22
24 23
26a
N2
W
32
34
33
43
36
35
31 (30)
44A
41
48
56
42
50
10
58
49 47A
46
57
54
12
52
51
13
(26)
M
53
45

FIG. 9B

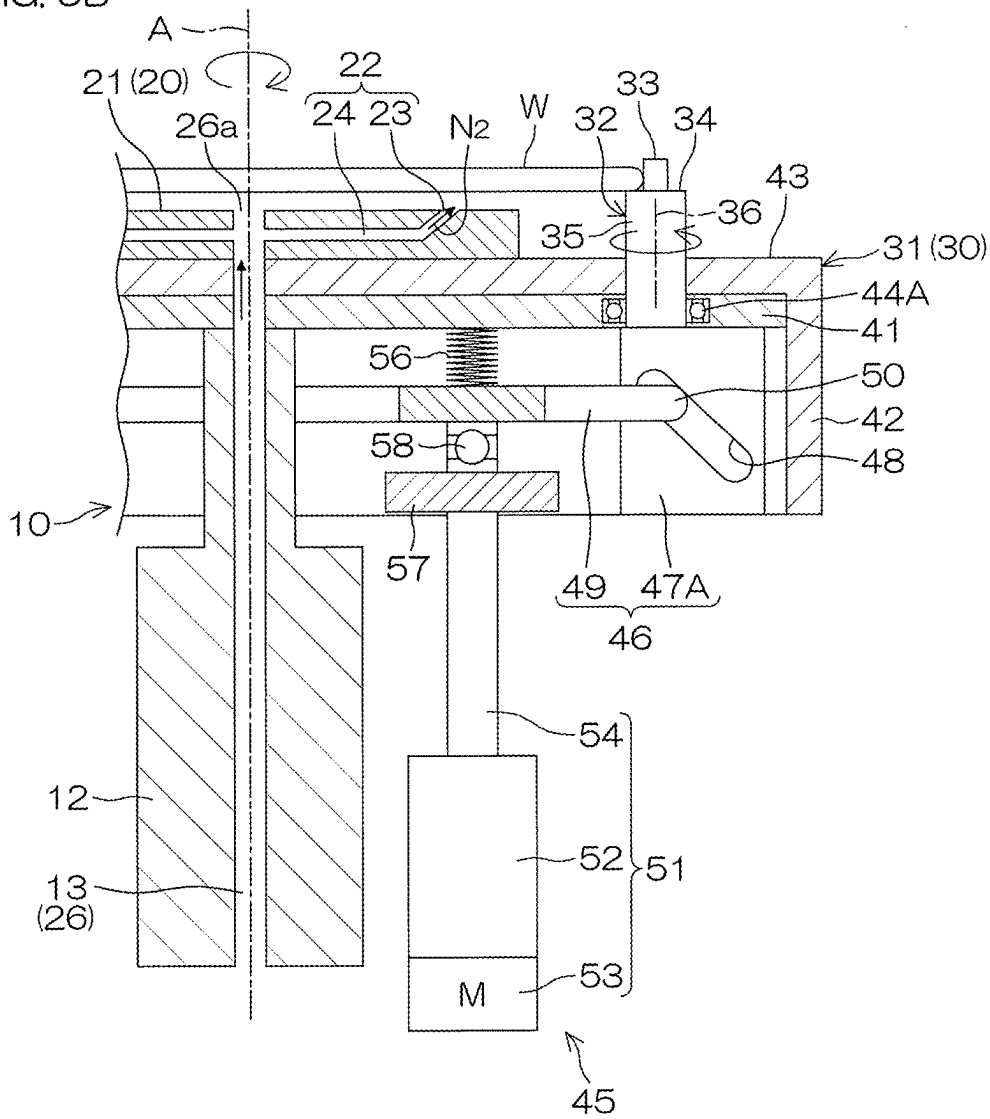
A
21 (20)
22
24 23
26a
N2
W
32
33
34
43
36
35
31 (30)
44A
41
56
50
42
58
48
10
57
49
47A
46
54
12
52
51
13
(26)
53
M
45

SUBSTRATE PROCESSING METHOD AND SUBSTRATE PROCESSING APPARATUS

CROSS REFERENCE TO RELATED APPLICATIONS

[0001] This application claims the benefit of priority to Japanese Patent Application No. 2024-037143 filed on Mar. 11, 2024 and the entire contents of this application are hereby incorporated herein by reference.

BACKGROUND OF THE INVENTION

1. Field of the Invention

[0002] The present invention relates to a substrate processing method and a substrate processing apparatus for processing substrates. Examples of substrates to be processed include a semiconductor wafer, a substrate for an FPD (flat panel display) such as a liquid crystal display and an organic EL (electroluminescence) display, etc., a substrate for an optical disc, a substrate for a magnetic disc, a substrate for a magneto-optical disc, a substrate for a photomask, a ceramic substrate, a substrate for a solar cell, and the like.

2. Description of the Related Art

[0003] A single substrate processing type of substrate processing apparatus that supplies a processing liquid to a substrate held in a horizontal state by a spin chuck to perform processing is known. A substrate processing method in such a substrate processing apparatus typically includes a liquid processing step of supplying a processing liquid to a substrate held by a spin chuck, and a drying step of rotating the substrate by rotation of the spin chuck to spin off the liquid.

[0004] One type of the spin chuck is one that grips a substrate with a plurality of chuck pins that come into contact with an outer circumferential portion of the substrate, is called a mechanical chuck or the like, and is disclosed in Japanese Patent Application Publication No. 2021-100067, for example. Another type of the spin chuck is one that holds a substrate at a lower surface center portion of the substrate. Spin chucks of this type include a Bernoulli chuck disclosed in Japanese Patent Application Publication No. 2023-45548, and a vacuum chuck that suctions the lower surface center of the substrate.

SUMMARY OF THE INVENTION

[0005] The mechanical chuck holds a substrate by bringing a chuck pin into contact with an outer circumferential portion side surface of the substrate. For this reason, a processing liquid hits the chuck pin and splashes back and the processing liquid is thereby reattached to the surface of the substrate, which causes particles. Also, in the case of processing of removing a film on the surface of the substrate with an etching liquid, there is a possibility that the film remains at a location where the chuck pin is in contact with the substrate, and the film will peel off later and be attached to the substrate surface to become foreign matter. In addition, when the etching liquid is blocked by the chuck pin and flows around to the lower surface of the substrate, the film on the lower surface may peel off, and the film may be attached to the substrate surface and become foreign matter. Further, in a drying step, due to the chuck pin being strongly pressed against the outer circumferential portion side surface in preparation for the high-speed rotation of the substrate, chipping occurs in the substrate or a crack occurs in the film on the outer circumferential portion side surface and a residue is generated, and the residue is attached to the substrate surface and becomes foreign matter, or becomes a contamination source of an apparatus in the next step. As described above, in the mechanical chuck, various phenomena occurring in the outer circumferential portion of the substrate with which the chuck pin is in contact become a problem.

[0006] The Bernoulli chuck suctions and holds a substrate by discharging a gas from a fluid head facing the lower surface center portion of the substrate to generate a Bernoulli effect. For this reason, since a member that comes into contact with the outer circumferential portion of the substrate is not required, the above-described problem in the mechanical chuck can be avoided. However, since a substrate holding force obtained by the Bernoulli effect does not reach a substrate holding force obtained by the mechanical chuck, when the substrate is held only by the Bernoulli effect, the upper limit of a substrate rotation speed in the drying step is restricted to, for example, about 1500 rpm. For this reason, since the time required for the drying step is long, the substrate processing time is long, which affects productivity.

[0007] Since the vacuum chuck vacuum-suctions the lower surface center portion of the substrate, the vacuum chuck has a substrate holding force larger than that of the Bernoulli chuck. However, when the lower surface center portion of the substrate is strongly suctioned, suction marks remain and the lower surface of the substrate is contaminated, which is a problem. In order to avoid this, it is necessary to reduce a suction force, and it is necessary to accordingly reduce the substrate rotation speed, and the time required for the drying step thereby becomes long.

[0008] Therefore, a preferred embodiment of the present invention provides a substrate processing method capable of shortening a drying step while avoiding a problem caused by a member coming into contact with an outer circumferential portion of a substrate during liquid processing, and accordingly contributing to an improvement in productivity. Also, another preferred embodiment of the present invention provides a substrate processing apparatus suitable for carrying out the substrate processing method as described above.

[0009] A preferred embodiment of the present invention provides a substrate processing apparatus and a substrate processing method having features which will be exemplified below.

[0010] 1. A substrate processing method including:

[0011] a liquid process to supply a processing liquid to a surface (upper surface or lower surface) of a substrate while holding the substrate in a horizontal state by a center chuck that holds the substrate in a lower surface center portion of the substrate; and

[0012] a drying process to spin off the liquid on the surface of the substrate by rotating the substrate around a rotation axis along an up/down direction while holding the substrate in a horizontal state by the center chuck and gripping the substrate at an outer circumferential portion of the substrate by an outer circumferential chuck including a plurality of grippers each

having a side surface contact portion that comes into contact with an outer circumferential portion side surface of the substrate.

[0013] In this substrate processing method, since the substrate is held by the center chuck in the liquid process, it is not necessary to hold the outer circumferential portion of the substrate. Therefore, it is possible to avoid a problem caused by a member being in contact with the outer circumferential portion of the substrate during the liquid processing. On the other hand, in the drying process, the substrate is held by both the center chuck and the outer circumferential chuck. Therefore, the substrate can be rotated at a higher speed than when the substrate is held only by the center chuck, and the drying processing time can be shortened. Also, since a holding force of the center chuck may be weak, it is, for example, possible to avoid a problem of a suction mark caused by strongly suctioning and holding the center portion of the substrate with a vacuum chuck. Further, since the pressing force of the grippers can be made smaller than when the substrate is held only by the outer circumferential chuck, it is possible to avoid a problem caused by strongly pressing the grippers.

[0014] 2. The substrate processing method according to item 1, wherein the side surface contact portion of each of the plurality of grippers is retreated from the outer circumferential portion side surface of the substrate in the liquid process, and is brought into contact with the outer circumferential portion side surface of the substrate in the drying process.

[0015] According to this method, in the liquid process, since the side surface contact portion of each of the grippers is retreated from the outer circumferential portion side surface of the substrate, the outer circumferential portion side surface of the substrate is in a state of not being in contact with any member over the entire circumference. As a result, it is possible to avoid various problems caused by a member being in contact with the outer circumferential portion of the substrate during the liquid processing.

[0016] 3. The substrate processing method according to item 1 or 2, further including a centering process to center the substrate by bringing the side surface contact portion of each of the plurality of grippers into contact with the outer circumferential portion side surface of the substrate, wherein

[0017] after the centering process, the liquid process is performed by retreating the side surface contact portion of each of the plurality of grippers from the outer circumferential portion of the substrate and bringing the side surface contact portion of each of the plurality of grippers into a non-contact state of not being in contact with the substrate.

[0018] By this method, centering, that is, an alignment operation of aligning the substrate center with the rotation axis is performed utilizing the grippers of the outer circumferential chuck, and thereafter, the liquid process can be performed while holding the substrate at the lower surface center portion by the center chuck. Therefore, when the substrate is rotated in the liquid process, the substrate can be stably held by the center chuck.

[0019] 4. The substrate processing method according to any one of items 1 to 3, wherein, in the drying process, the substrate is rotated around the rotation axis at a predetermined drying rotation speed, and the side surface contact portion of each of the plurality of grippers is pressed against the outer circumferential portion side surface of the substrate with a pressing force smaller than an assumed pressing force required when the substrate is rotated at the drying rotation speed while being held by the outer circumferential chuck without being held by the center chuck.

[0020] As described above, in the drying process, since the substrate is held by both the center chuck and the outer circumferential chuck, the pressing force of the grippers against the outer circumferential portion side surface of the substrate may be weak. Therefore, by reducing the pressing force of the grippers, problems such as chipping of the outer circumferential portion of the substrate can be overcome.

[0021] 5. The substrate processing method according to any one of items 1 to 4, further comprising an elevating/lowering process to move the lower surface supporting portion up and down relative to the center chuck in a state where the substrate is supported from below by the lower surface supporting portion in contact with an outer circumferential portion lower surface of the substrate.

[0022] By this method, the substrate can be vertically moved with respect to the center chuck by elevating/lowering the lower surface supporting portion. This facilitates the carry-in and carry-out of the substrate by the substrate transfer robot.

[0023] 6. The substrate processing method according to item 5, wherein each of the plurality of grippers includes the lower surface supporting portion.

[0024] By this method, the substrate can be vertically moved with respect to the center chuck by elevating/lowering the grippers without providing a dedicated lower surface supporting portion. This facilitates the carry-in and carry-out of the substrate by the substrate transfer robot. The substrate may be transferred between the outer circumferential chuck and the center chuck by elevating/lowering the grippers.

[0025] 7. The substrate processing method according to any one of items 1 to 6, wherein the center chuck includes a Bernoulli chuck.

[0026] Although the Bernoulli chuck does not have a large enough substrate holding force to withstand high-speed rotation, there is no problem in holding the substrate during liquid processing that does not require high-speed rotation of the substrate, and there is an advantage that the substrate can be held in a state where the outer circumferential portion side surface of the substrate is released or free of contact by any member. On the other hand, in the drying process, since the substrate is held also by the outer circumferential chuck, it is possible to shorten the drying processing time by rotating the substrate at a high speed. In addition, due to the contribution of the Bernoulli chuck to the holding of the substrate, the pressing force of the grippers of the outer circumferential chuck against the outer circumferential portion side surface of the substrate can be reduced, and it is thereby made possible to prevent a defect or the like in the outer circumferential portion of the substrate.

[0027] 8. The substrate processing method according to any one of items 1 to 6, wherein the center chuck includes a vacuum chuck.

[0028] Since the vacuum chuck can hold the substrate in a state where the outer circumferential portion side surface of the substrate is released, the outer circumferential portion side surface of the substrate can be thoroughly processed in the liquid process. On the other hand, in the drying process,

since the substrate is held also by the outer circumferential chuck, it is not necessary to strongly suction the lower surface center portion of the substrate by the vacuum chuck, and thus, it is possible to shorten the drying processing time by rotating the substrate at a high speed while preventing generation of a suction mark. In addition, due to the contribution of the vacuum chuck to the holding of the substrate, the pressing force of the grippers of the outer circumferential chuck against the outer circumferential portion side surface of the substrate can be reduced, and it is thereby made possible to prevent a defect or the like in the outer circumferential portion of the substrate.

[0029] 9. A substrate processing apparatus including:

[0030] a hybrid chuck including a center chuck to hold a substrate at a lower surface center portion of the substrate and an outer circumferential chuck that includes a plurality of grippers that come into contact with an outer circumferential portion side surface of the substrate, the center chuck and the outer circumferential chuck being disposed to share a predetermined rotation axis along a vertical direction;

[0031] a lift to move the plurality of grippers up and down relative to the center chuck; and

[0032] a gripper actuator to displace the plurality of grippers between a closed state where the plurality of grippers are in contact with the outer circumferential portion side surface of the substrate and an open state where the plurality of grippers are retreated from the outer circumferential portion side surface of the substrate.

[0033] With this configuration, a substrate processing apparatus suitable for carrying out the above-described substrate processing method can be provided.

[0034] 10. The substrate processing apparatus according to item 9, wherein each of the plurality of grippers includes a side surface contact portion that comes into contact with the outer circumferential portion side surface of the substrate and a lower surface supporting portion that comes into contact with an outer circumferential portion lower surface of the substrate.

[0035] 11. The substrate processing apparatus according to item 10, further including a controller that controls the lift and the gripper actuator, wherein

[0036] the controller is configured or programmed to move the plurality of grippers up and down relative to the center chuck in a state where the substrate is supported from below by the lower surface supporting portion.

[0037] 12. The substrate processing apparatus according to item 11, wherein

[0038] the controller configured or programmed to further control the center chuck, and wherein

[0039] the controller is configured or programmed to bring the side surface contact portion of each of the plurality of grippers into contact with the outer circumferential portion side surface of the substrate to perform centering of the substrate (alignment of aligning the substrate center with the rotation axis), then retreats the side surface contact portion from the outer circumferential portion side surface of the substrate, and thereafter causes the center chuck to hold the substrate.

[0040] 13. The substrate processing apparatus according to any one of items 9 to 12, further including:

[0041] a processing liquid nozzle to supply a processing liquid to the substrate held by the hybrid chuck; and

[0042] a controller configured or programmed to control the center chuck and the outer circumferential chuck, wherein

[0043] the controller is configured or programmed

[0044] to control the center chuck to be in a holding state in which the center chuck holds the substrate and controls the outer circumferential chuck to be in a non-holding state in which the outer circumferential chuck is not in contact with the substrate in a liquid process in which the processing liquid is supplied from the processing liquid nozzle to the substrate held by the hybrid chuck, and

[0045] to controls both the center chuck and the outer circumferential chuck to be in a holding state in which both the center chuck and the outer circumferential chuck hold the substrate in a drying process to stop supplying of the processing liquid from the processing liquid nozzle and to dry the substrate by rotating the substrate at a predetermined drying rotation speed around the rotation axis.

[0046] 14. The substrate processing apparatus according to item 13, wherein the controller is configured or programmed to rotate the substrate around the rotation axis at the predetermined drying rotation speed, and to control the gripper actuator such that the plurality of grippers are pressed against the outer circumferential portion side surface of the substrate with a pressing force smaller than an assumed pressing force required when the substrate is rotated at the predetermined drying rotation speed while being held by the outer circumferential chuck without being held by the center chuck, in the drying process.

[0047] 15. The substrate processing apparatus according to item 14, wherein the gripper actuator varies (preferably continuously varies) the pressing force of the plurality of grippers against the outer circumferential portion side surface of the substrate.

[0048] 16. The substrate processing apparatus according to any one of items 9 to 15, wherein the center chuck includes a Bernoulli chuck.

[0049] 17. The substrate processing apparatus according to any one of items 9 to 15, wherein the center chuck includes a vacuum chuck.

[0050] The above and yet other objects, features, and effects of the present invention will become more apparent from the following description of the preferred embodiments made with reference to the attached drawings.

BRIEF DESCRIPTION OF THE DRAWINGS

[0051] FIG. **1** is a schematic plan view illustrating a layout of a substrate processing system including a substrate processing apparatus according to a preferred embodiment of the present invention.

[0052] FIG. **2** is a side view illustrating a configuration example of a processing unit (an example of the substrate processing apparatus) and part of the configuration is illustrated in a vertical cross-sectional view.

[0053] FIG. **3** is a block diagram for explaining an electrical configuration of the substrate processing apparatus.

[0054] FIG. **4**A is a vertical cross-sectional view illustrating a configuration example of a hybrid chuck.

[0055] FIG. **4**B is a plan view illustrating the configuration example of the hybrid chuck.

[0056] FIGS. **5**A to **5**C are schematic cross-sectional views for explaining a configuration example of an outer circumferential chuck.

[0057] FIG. **6** is a flowchart for explaining an example of substrate processing.

[0058] FIGS. **7**A to **7**D are schematic cross-sectional views illustrating states of the hybrid chuck in main steps.

[0059] FIGS. **8**A to **8**D are cross-sectional views for explaining another preferred embodiment of the present invention, and show another configuration example of the hybrid chuck.

[0060] FIGS. **9**A and **9**B are diagrams for explaining still another preferred embodiment of the present invention, and show another configuration example of the outer circumferential chuck.

DETAILED DESCRIPTION OF THE PREFERRED EMBODIMENTS

[0061] FIG. **1** is a schematic plan view illustrating a layout of a substrate processing system **100** including a substrate processing apparatus according to a preferred embodiment of the present invention. The substrate processing system **100** is a system that processes a substrate W such as a semiconductor substrate. The substrate processing system **100** includes an indexer block **1** and a processing block **4** coupled to the indexer block **1**.

[0062] The indexer block **1** includes a carrier holding portion **2** and an indexer robot **3**. The carrier holding portion **2** is configured to be able to hold a plurality of carriers C each capable of accommodating a plurality of substrates W. The plurality of carriers C (for example, front opening unified pods (FOUPs)) are held in the carrier holding portion **2** in a state of being arranged in a predetermined carrier arrangement direction (an up/down direction in FIG. **1**). The indexer robot **3** is movable in the carrier arrangement direction. The indexer robot **3** performs a carry-out operation of carrying each of the substrates W out of the carrier C and a carry-in operation of carrying the substrate W into the carrier C held by the carrier holding portion **2**. The substrate W is transferred in a horizontal posture by the indexer robot **3**.

[0063] The processing block **4** includes a plurality of processing units **5** to process the substrates W and a center robot **6** (a substrate transfer robot). The plurality of processing units **5** is disposed such as to surround the center robot **6** in a plan view, and further, may be stacked in a plurality of layers in an up/down direction. In the plurality of processing units **5**, various types of processing are performed on the substrate W. Each of the processing units **5** is an example of a substrate processing apparatus. The center robot **6** performs a carry-in operation of carrying the substrate W into the processing unit **5** and a carry-out operation of carrying the substrate W out of the processing unit **5**. Further, the center robot **6** can also transfer the substrate W between the plurality of processing units **5**. The substrate W is horizontally held by a hand **6***a* of the center robot **6** and transferred in a horizontal posture. The center robot **6** receives an untreated substrate W from the indexer robot **3**, and delivers the processed substrate W to the indexer robot **3**.

[0064] FIG. **2** is a side view illustrating a configuration example of the processing unit **5** (an example of the substrate processing apparatus) and part of the configuration is illustrated in a vertical cross-sectional view. The processing unit **5** is a single substrate processing type of substrate processing apparatus that processes the substrates W one by one. The processing unit **5** performs liquid process to supply the processing liquid to the substrate W and drying process to spin off the liquid on the substrate W after the liquid process. The processing liquid may be a chemical liquid or a rinse liquid. The chemical liquid may be a cleaning liquid for cleaning the surface of the substrate W or an etching liquid for etching process. Although the rinse liquid is typically deionized water (DIW), other types of liquids such as carbonated water and isopropyl alcohol (IPA) may also be used as the rinse liquid.

[0065] The processing unit **5** includes a hybrid chuck **10**, a substrate rotating mechanism **11**, a processing liquid nozzle **15**, a nozzle moving mechanism **18**, a lower surface nozzle **19**, a processing cup **73**, a controller **8**, and a chamber **80**.

[0066] The hybrid chuck **10** is a substrate holding portion or a substrate holder to hold one substrate W in a horizontal posture. The substrate rotating mechanism **11** is a rotation actuator to rotate the substrate W around a vertical rotation axis A passing through the center of the substrate W. More specifically, the substrate rotating mechanism **11** rotates the hybrid chuck **10** around the rotation axis A.

[0067] The processing liquid nozzle **15** supplies the processing liquid to the surface (the upper surface) of the substrate W held and rotated by the hybrid chuck **10**. The processing liquid is supplied to the processing liquid nozzle **15** through a processing liquid piping **16**. A processing liquid valve **17** is interposed in the middle of the processing liquid piping **16**. In this preferred embodiment, the processing liquid nozzle **15** is a moving nozzle movable by the nozzle moving mechanism **18**. The nozzle moving mechanism **18** is a nozzle actuator to move the processing liquid nozzle **15** between a processing position above the substrate W held by the hybrid chuck **10** and a retreat position retreated laterally from above the substrate W.

[0068] The lower surface nozzle **19** has a discharge port **19***a* facing the lower surface center of the substrate W held by the hybrid chuck **10**, and supplies a processing fluid (a liquid or a gas; for example, an inert gas such as nitrogen gas or dry air) toward the lower surface center of the substrate W. The lower surface nozzle **19** is disposed inside a shaft **12** of the substrate rotating mechanism **11**. The processing fluid is supplied to the lower surface nozzle **19** through a processing fluid piping **71**. A processing fluid valve **72** is interposed in the processing fluid piping **71**.

[0069] The processing cup **73** is disposed such as to surround the hybrid chuck **10**, and captures a liquid discharged outward from the substrate W by a centrifugal force. A bottom portion of the processing cup **73** is provided with a liquid discharge port (not illustrated) for discharging the captured liquid to the outside of the chamber **80**.

[0070] The hybrid chuck **10**, the substrate rotating mechanism **11**, the processing cup **73**, the processing liquid nozzle **15**, and the like are accommodated in an internal space **82** of the chamber **80**. A canopy portion **81** of the chamber **80** is provided with an airflow forming portion **83** that supplies a gas to the internal space **82** of the chamber **80** to form a downward flowing airflow (so-called downflow). As the airflow forming portion **83**, for example, a fan filter unit (FFU) is utilized.

[0071] The hybrid chuck **10** and the substrate rotating mechanism **11** compose a spin chuck to hold a substantially disk-shaped substrate W in a horizontal posture and to rotate the substrate W around the rotation axis A along a vertical direction. The substrate rotating mechanism **11** is disposed below the hybrid chuck **10**. The substrate rotating mechanism **11** rotates the substrate W together with the hybrid chuck **10** about the rotation axis A. The substrate rotating mechanism **11** includes the shaft **12** and an electric motor **14**. The shaft **12** is a substantially cylindrical member centered on the rotation axis A. The shaft **12** extends in the up/down direction and is connected to the hybrid chuck **10**. The electric motor **14** rotates the shaft **12**. The electric motor **14** may be a hollow motor.

[0072] The controller **8** is disposed outside the chamber **80**. The controller **8** is, for example, a computer system including a processor **8***p* and a memory **8***m*. The processor **8***p* executes various types of processing according to a program or the like stored in the memory **8***m*. Accordingly, the controller **8** is configured or programmed to control the operation of a control target such as the indexer robot **3**, the center robot **6**, the hybrid chuck **10**, the substrate rotating mechanism **11**, the nozzle moving mechanism **18**, and the valves **17** and **72**.

[0073] FIG. **4**A is a vertical cross-sectional view illustrating a configuration example of the hybrid chuck **10**, and FIG. **4**B is a plan view of the hybrid chuck **10**. In FIG. **4**B, the substrate W held by the hybrid chuck **10** is indicated by an alternate long and two short dashed line.

[0074] The hybrid chuck **10** is configured by combining and integrating center chuck **20** and an outer circumferential chuck **30** such as to share the rotation axis A. The center chuck **20** is configured to hold the substrate W in a horizontal state at the lower surface center portion of the substrate W. The outer circumferential chuck **30** includes a plurality of gripping members or grippers **32** that are configured to come into contact with the outer circumferential portion side surface of the substrate W. The center chuck **20** and the outer circumferential chuck **30** can hold the substrate W in a horizontal state by only one of them, and can hold the substrate W in a horizontal state by both of them.

[0075] The outer circumferential chuck **30** includes a disk-shaped base **31** (hereinafter referred to as "outer circumferential base **31**") and the plurality of grippers **32** protruding upward from a circumferential edge portion of the outer circumferential base **31**. In this example, six grippers **32** are disposed at equal intervals on a circumference about the rotation axis A. The outer edge of the outer circumferential base **31** is located radially (in a radial direction centered on the rotation axis A) more outward than the outer circumferential edge of the substrate W, and the grippers **32** are disposed radially more outward than the outer circumferential edge of the substrate W.

[0076] Each of the grippers **32** is composed of a gripping pin extending along the vertical direction, and the upper end portion thereof is provided with a side surface contact portion **33** that is to come into contact with the outer circumferential portion side surface of the substrate W and a lower surface supporting portion **34** that is to come into contact with the outer circumferential portion lower surface of the substrate W. The side surface contact portion **33** faces the outer circumferential portion side surface of the substrate W, and the lower surface supporting portion **34** faces the outer circumferential portion lower surface of the substrate W. Each of the grippers **32** is configured to be displaceable between a closed state in which the side surface contact portion **33** is in contact with the outer circumferential portion side surface of the substrate W and an open state in which the side surface contact portion **33** is retreated from the outer circumferential portion side surface of the substrate W. More specifically, when the gripper **32** turns around a circumrotation axis **36** along the vertical direction, a distance between the side surface contact portion **33** and the rotation axis A varies, and accordingly, a distance between the side surface contact portion **33** and the outer circumferential portion side surface of the substrate W varies.

[0077] Further, in this example, the grippers **32** are configured to be vertically movable up and down with respect to the outer circumferential base **31**, thereby to mediate the transfer of the substrate W between the center robot **6** and the hybrid chuck **10**, and are configured to be able to transfer the substrate W between the outer circumferential chuck **30** (more specifically, the lower surface supporting portions **34** of the grippers **32**) and the center chuck **20**.

[0078] The center chuck **20** is incorporated in the center portion of the outer circumferential base **31**. In this example, the center chuck **20** is a Bernoulli chuck to suction and hold the substrate W by a Bernoulli effect. The center chuck **20** includes a base **21** (hereinafter referred to as "center base **21**") and a gas supplying portion **22** which are incorporated in the center portion of the outer circumferential base **31**. The center base **21** is a substantially disk-shaped member centered on the rotation axis A. The center base **21** has an upper surface (a suction surface) facing the lower surface of the substrate W. The upper surface of the center base **21** is a substantially horizontal plane. The diameter of the center base **21** is smaller than the diameter of the substrate W, and the outer edge of the upper surface of the center base **21** is located radially more inward than the outer circumferential edge of the substrate W.

[0079] The gas supplying portion **22** includes a gas discharge port **23** opened on the upper surface of the center base **21** and a gas flow path **24** for supplying a gas to the gas discharge port **23**. In this preferred embodiment, the gas discharge port **23** is an annular slit opening centered on the rotation axis A. Instead of such one annular slit opening, a plurality of discrete openings arranged in an annular shape may be used as the gas discharge port **23**. The gas discharge port **23** is connected to a gas supply source **25** via the gas flow path **24** provided inside the center base **21**.

[0080] The outer circumferential base **31** and the center base **21** are coupled to the shaft **12** of the substrate rotating mechanism **11**. The shaft **12** is a hollow shaft having a through hole **13** passing through thereof in the axial direction. The lower surface nozzle **19** passes through the through hole **13**. A gas supply passage **26** is formed between the lower surface nozzle **19** and the inner circumferential surface of the through hole **13**, and the gas supply passage **26** communicates with the gas flow path **24**. The gas supply passage **26** has a gas discharge port **26***a* opened at an upper surface center of the center base **21**, and can discharge a gas from the gas discharge port **26***a* toward the lower surface center of the substrate W. A gas can be supplied from the gas supply source **25** to the gas supply passage **26** via a gas piping **27**. The gas may be, for example, an inert gas such as nitrogen gas, or air, etc. This gas is, for example, a high-pressure gas or a compressed gas. When a gas valve **28** provided in the gas piping **27** is opened, the gas supplied

from the gas supply source **25** passes through the gas supply passage **26** and the gas flow path **24**, is discharged from the gas discharge port **23**, and is discharged from the gas discharge port **26***a* at the center of the center base **21**.

[0081] The gas flow path **24** obliquely extends radially outward and upward in the vicinity of the gas discharge port **23**. The gas discharge port **23** is disposed such as to open below the substrate W at a position more inward than the outer circumference of the substrate W. Therefore, the gas is discharged radially outward and upward from the gas discharge port **23** toward the lower surface of the substrate W. This gas flows substantially horizontally, radially outward along the lower surface of the substrate W. Also, the gas discharged from the gas discharge port **26***a* at the center of the center base **21** also flows radially outward along the lower surface of the substrate W. As a result, an air flow directed radially outward from a radial center portion is formed in a space below the substrate W, and a pressure drop in the space below the substrate W occurs due to a Bernoulli effect by the air flow. As a result, the center portion of the substrate W is suctioned to the center chuck **20**.

[0082] When the flow rate of the gas discharged from the gas discharge ports **23** and **26***a* increases, the downward suction force acting on the substrate W increases accordingly. When the discharge of the gas is stopped, the suction force is lost.

[0083] FIGS. **5**A, **5**B, and **5**C are schematic cross-sectional views for explaining a configuration example of the outer circumferential chuck **30**. The outer circumferential base **31** includes a base plate **41** fixed to the shaft **12** and a base cover **42** coupled to the base plate **41**. The base plate **41** is accommodated in the base cover **42**. Each of the grippers **32** is coupled to the base plate **41** via a bearing **44**. Each of the grippers **32** includes a shaft portion **35** that passes through the base plate **41** in the up/down direction, further passes through a top surface portion **43** of the base cover **42** and protrudes upward, and the lower surface supporting portion **34** and the side surface contact portion **33** are provided at an upper end portion of the shaft portion **35**. The bearing **44** couples the shaft portion **35** of the gripper **32** to the base plate **41** such as to be circumrotatable about the circumrotation axis **36** and guide up/down movement with respect to the base plate **41**. The side surface contact portion **33** is erected at a position eccentric from the circumrotation axis **36**. Therefore, the distance between the side surface contact portion **33** and the outer circumferential portion side surface of the substrate W changes by the circumrotation of the gripper **32** about the circumrotation axis **36**.

[0084] A gripper driving mechanism **45** is provided, and is configured to turn each of the grippers **32** around the circumrotation axis **36** and to move each of the grippers **32** up and down. The gripper driving mechanism **45** includes a cam mechanism **46** and a cam driving mechanism **51** that applies a driving force to the cam mechanism **46**.

[0085] The cam mechanism **46** includes a cam follower **47** fixed to a lower end of the shaft portion **35** of the gripper **32** and a cam lever **49** coupled to the cam follower **47**. A compression coil spring **55** is wound around the shaft portion **35** of the gripper **32** between the cam follower **47** and the base plate **41** to bias the cam follower **47** and the gripper **32** downward. The cam lever **49** is accommodated in the base cover **42** and is movable up and down below the base plate **41**. The cam follower **47** has a cam groove **48** inclined with respect to the up/down direction, and a drive end **50** of the cam lever **49** is coupled to the cam groove **48**. A compression coil spring **56** that pushes down the cam lever **49** is disposed between the cam lever **49** and the lower surface of the base plate **41**.

[0086] The cam driving mechanism **51** is disposed in a non-rotating system outside the base cover **42**. The cam driving mechanism **51** includes a ball-screw mechanism **52**, an electric motor **53** that applies a driving force to the ball-screw mechanism **52**, and a driving rod **54** that is moved up and down by the ball-screw mechanism **52**. A ring-shaped elevating/lowering plate **57** surrounding the rotation axis A is coupled to an upper end of the driving rod **54**. A ring-shaped ball bearing **58** surrounding the rotation axis A is disposed between the elevating/lowering plate **57** and the cam lever **49**. One bearing ring of the ball bearing **58** is coupled to the elevating/lowering plate **57**, and the other bearing ring of the ball bearing **58** is coupled to the cam lever **49**.

[0087] When the cam driving mechanism **51** is driven, the elevating/lowering plate **57** moves up and down, and this up/down movement is transmitted to the cam lever **49** via the ball bearing **58**, and the cam lever **49** also moves up and down. Then, the drive end **50** of the cam lever **49** moves in the cam groove **48** of the cam follower **47** to radially displace the cam follower **47**. As a result, the gripper **32** circumrotates around the circumrotation axis **36**. As a result, the distance between the side surface contact portion **33** and the rotation axis A, that is, the distance between the side surface contact portion **33** and the outer circumferential portion side surface of the substrate W varies.

[0088] In this preferred embodiment, it is configured such that, when the cam lever **49** is lowered and the cam follower **47** is displaced radially outward, the side surface contact portion **33** is displaced in a direction approaching the rotation axis A and approaches the outer circumferential portion side surface of the substrate W. Therefore, as illustrated in FIG. **5**A, by lowering the cam lever **49**, the side surface contact portion **33** can be brought into contact with the outer circumferential portion side surface of the substrate W, and the side surface contact portion **33** can be pressed against the outer circumferential portion side surface of the substrate W. That is, the gripper **32** can be brought into a closed state. The pressing force of the side surface contact portion **33** against the outer circumferential portion side surface of the substrate W is continuously variable by changing the driving force applied from the cam driving mechanism **51** including the ball-screw mechanism **52**, that is, a torque generated by the electric motor **53**.

[0089] When the cam driving mechanism **51** elevates the elevating/lowering plate **57** to elevate the cam lever **49**, the cam follower **47** is displaced radially inward as illustrated in FIG. **5**B. Then, the side surface contact portion **33** is displaced in a direction away from the rotation axis A, and is separated from the outer circumferential portion side surface of the substrate W. As a result, the gripper **32** can be brought into an open state.

[0090] When the cam lever **49** is further elevated by the cam driving mechanism **51** from the state in which the drive end **50** of the cam lever **49** reaches the upper end of the cam groove **48**, the cam follower **47** can be elevated as illustrated in FIG. **5**C, and the gripper **32** can thereby be elevated to the upper position. As a result, the outer circumferential portion lower surface of the substrate W can be supported by the lower surface supporting portion **34** of the gripper **32** to lift

the substrate W. When the cam lever **49** is lowered by the cam driving mechanism **51** from this state, the cam follower **47** is pushed down by the compression coil spring **55**, and accordingly, the gripper **32** can be lowered to the lower position illustrated in FIG. **5**B. In this way, the gripper **32** moves up and down between the upper position (see FIG. **5**C) and the lower position (see FIGS. **5**A and **5**B), thereby having a function as a lift pin that moves the substrate W in the up/down direction. The gripper driving mechanism **45** is an elevating/lowering mechanism or a lift to move the gripper **32** up and down relative to the center chuck **20**, and is also an opening/closing mechanism or a gripper actuator to displace the gripper **32** between the closed state and the open state. As a matter of course, it may be configured such that the elevating/lowering mechanism and the opening/closing mechanism are separately provided.

[0091] The upper position of the gripper **32** is a transfer position at which the substrate W is transferred between the hand **6***a* (see FIG. **1**) of the center robot **6** (the substrate transfer robot) and the hybrid chuck **10**. The lower position of the gripper **32** is a position where the substrate W can be held by the center chuck **20**. Therefore, the lower position is a position where both the outer circumferential chuck **30** and the center chuck **20** can hold the substrate W, and is thus a position where the substrate W can be transferred between the outer circumferential chuck **30** and the center chuck **20**. When the gripper **32** is at the lower position, the substrate W can be held only by the center chuck **20** with the gripper **32** in the open state (see FIG. **5**B). Also, when the gripper **32** is at the lower position, the substrate W can be held (gripped) by the outer circumferential chuck **30** with the gripper **32** in the closed state. Therefore, as illustrated in FIG. **5**A, the substrate W can be held by the lower surface center portion of the substrate W by the center chuck **20**, and the substrate W can be held at the outer circumferential portion of the substrate W by the outer circumferential chuck **30**.

[0092] FIG. **6** is a flowchart for explaining an example of substrate processing. Also, FIGS. **7**A to **7**D are schematic cross-sectional views illustrating states of the hybrid chuck **10** in main steps. An operation of each step which will be described below is achieved by the controller **8** controlling each portion according to a predetermined program and a substrate processing recipe.

[0093] The substrate W to be processed is carried into the processing unit **5** by the center robot **6** and delivered to the outer circumferential chuck **30** (step S**1**). The substrate W delivered to the grippers **32** is supported in a horizontal posture by the lower surface supporting portions **34** of the grippers **32** coming into contact with the outer circumferential portion lower surface of the substrate W. At this time, as illustrated in FIG. **7**A, the grippers **32** are disposed at the upper position in the open state under the control of the cam driving mechanism **51** by the controller **8**. Also, the discharge of the gas from the gas discharge ports **23** and **26***a* has been stopped, and thus the center chuck **20** (the Bernoulli chuck) is in an inactive state (a non-suctioning state, a non-holding state).

[0094] Next, the controller **8** controls the cam driving mechanism **51** so that the grippers **32** are lowered to the lower position in a state where the substrate W is supported by the lower surface supporting portions **34** (step S**2**). Further, under the control of the cam driving mechanism **51**, the grippers **32** are brought into a closed state, and the side surface contact portions **33** of the grippers **32** come into contact with the outer circumferential portion side surface of the substrate W. Thereby, alignment, that is, centering is performed to align the center of the substrate W with the rotation axis A (step S**3**; see FIG. **7**B).

[0095] Next, the controller **8** opens the gas valve **28** to start gas discharge from the gas discharge port **23**, thereby the center chuck **20** (the Bernoulli chuck) is brought into an operating state (a suctioning state, a holding state) (step S**4**; see FIG. **7**C). Then, under the control of the cam driving mechanism **51**, the grippers **32** are brought into the open state (the non-holding state), and the holding by the outer circumferential chuck **30** is released. As a result, the substrate W is delivered from the outer circumferential chuck **30** to the center chuck **20**, and the substrate W is held only by the center chuck **20**. At this time, the grippers **32** are not in contact with either the side surface or the lower surface of an outer circumferential portion (a bevel) of the substrate W, and the substrate W is held by the center chuck **20** in a bevel-free state. Since the Bernoulli chuck suctions the substrate W by generating an airflow on the lower surface of the substrate W, the substrate W is held by the center chuck **20** in a state where the substrate W is floating upward from the lower surface supporting portions **34** of the grippers **32**. As necessary, the grippers **32** may be slightly lowered in order to secure an interval between the outer circumferential portion lower surface of the substrate W and the lower surface supporting portions **34**.

[0096] In this manner, the liquid process to supply the processing liquid to the surface of the substrate W is performed while rotating the substrate W in a state where the substrate W is held only by the center chuck **20** (step S**5**; a liquid process; see FIG. **7**C). That is, the controller **8** controls the substrate rotating mechanism **11** to cause the hybrid chuck **10** to rotate around the rotation axis A, and the substrate W is thereby rotated around the rotation axis A at a predetermined liquid processing rotation speed (for example, 800 rpm). The liquid processing rotation speed is set to an appropriate value equal to or less than an upper limit rotation speed (for example, 1500 rpm) at which holding and rotating only by the center chuck **20** (the Bernoulli chuck) is possible. Also, when the processing liquid valve **17** is opened by the control of the controller **8**, the processing liquid is discharged from the processing liquid nozzle **15** toward the surface (here, the upper surface) of the substrate W. As shown in FIG. **7**C, the processing fluid (the processing liquid or a processing gas) may be discharged from the lower surface nozzle **19** as necessary. After the liquid processing is performed for a predetermined liquid processing time, the discharge of the processing liquid from the processing liquid nozzle **15** is stopped.

[0097] Next, at the start of a drying process of rotating the substrate W around the rotation axis A at a predetermined drying rotation speed (for example, 2500 rpm) to spin off the liquid, the controller **8** controls the cam driving mechanism **51** to control the grippers **32** to the closed state (holding state). That is, the side surface contact portions **33** of the grippers **32** come into contact with the outer circumferential portion side surface of the substrate W, and holding of the substrate by the outer circumferential chuck **30** is started. That is, the substrate W is held at the lower surface center portion by the center chuck **20** and is held at the outer circumferential portion by the outer circumferential chuck **30** (step S**6**; see FIG. **7**D).

[0098] The controller **8** executes pressing force control to adjust the pressing force under the control of the cam driving mechanism **51** (step S**7**). More specifically, the controller **8** controls the pressing force by controlling the torque generated by the electric motor **53**. The pressing force is controlled to a value smaller than an assumed pressing force required when the substrate W is not held by the center chuck **20** but the substrate W is held only by the outer circumferential chuck **30**, and the substrate W is rotated at the drying rotation speed. That is, the torque generated by the electric motor **53** is controlled such that such a pressing force is achieved.

[0099] The drying process is performed while performing such pressing force control (step S**8**). That is, the controller **8** accelerates the rotation speed of the substrate W to the drying rotation speed by controlling the substrate rotating mechanism **11**, and maintains the drying rotation speed over a predetermined drying time. Thereafter, the rotation of the substrate is stopped, and the drying process is terminated. In the drying process, an inert gas may be discharged from the lower surface nozzle **19** to promote drying.

[0100] Next, the controller **8** releases the suctioning and holding by the center chuck **20** (Bernoulli chuck) by closing the gas valve **28** and stopping the discharge of the gas from the gas discharge port **23** (step S**9**). As a result, the substrate W is brought into a state where being held only by the outer circumferential chuck **30**, and the substrate W is transferred from the center chuck **20** to the outer circumferential chuck **30**.

[0101] Thereafter, the controller **8** controls the cam driving mechanism **51** to bring the grippers **32** into the open state to separate the side surface contact portions **33** thereof from the outer circumferential portion side surface of the substrate W, and further, elevates the gripper **32** to the elevated position in a state where the lower surface supporting portion **34** supports the outer circumferential portion lower surface of the substrate W (step S**10**; see FIG. **7**A). Thereafter, the center robot **6** picks up the processed substrate W from the grippers **32** in the open state and carries out the substrate W (step S**11**). In this way, the processing on one substrate W is ended.

[0102] As described above, in this preferred embodiment, since the substrate W is held by the center chuck **20** in the liquid process, it is not necessary to hold the outer circumferential portion of the substrate W. Therefore, it is possible to avoid a problem caused by a member being in contact with the outer circumferential portion of the substrate W during the liquid process. On the other hand, in the drying process, the substrate W is held by both the center chuck **20** and the outer circumferential chuck **30**. Therefore, the substrate W can be rotated at a higher speed than when the substrate W is held only by the center chuck **20**, and the drying process time can be shortened. Also, since the pressing force of the grippers **32** can be made smaller than when the substrate W is held only by the outer circumferential chuck **30**, it is possible to avoid a problem caused by strongly pressing the grippers **32**.

[0103] In this preferred embodiment, the side surface contact portion **33** of each of the grippers **32** is retreated from the outer circumferential portion side surface of the substrate W in the liquid process, and is brought into contact with the outer circumferential portion side surface of the substrate in the drying process. Therefore, in the liquid process, the outer circumferential portion side surface of the substrate W is in a state of not being in contact with any member over the entire circumference. As a result, it is possible to avoid various problems caused by a member being in contact with the outer circumferential portion of the substrate W during the liquid processing.

[0104] Also, in this preferred embodiment, a centering process to center the substrate W (align the center of the substrate W) by bringing the side surface contact portions **33** of the grippers **32** into contact with the outer circumferential portion side surface of the substrate W performed. Then, after the centering process, the liquid process is executed in such a manner that the side surface contact portions **33** of the grippers **32** are retreated from the outer circumferential portion of the substrate W and the side surface contact portions **33** are brought into a non-contact state of not being in contact with the substrate W. That is, centering, that is, an alignment operation of aligning the substrate center with the rotation axis A is performed utilizing the grippers **32** of the outer circumferential chuck **30**, and thereafter, the liquid process can be performed while holding the substrate W at the lower surface center portion by the center chuck **20**. Therefore, when the substrate W is rotated in the liquid process, the substrate W can be stably held by the center chuck **20**.

[0105] Also, in this preferred embodiment, when the substrate W is rotated around the rotation axis A at a predetermined drying rotation speed in the drying process, the side surface contact portions **33** of the grippers **32** are pressed against the outer circumferential portion side surface of the substrate W with a pressing force smaller than an assumed pressing force required when the substrate W is rotated at the drying rotation speed while being held by the outer circumferential chuck **30** without being held by the center chuck **20**. In the drying process, since the substrate W is held by both the center chuck **20** and the outer circumferential chuck **30**, the pressing force of the grippers **32** against the outer circumferential portion side surface of the substrate W may be weak. Therefore, by reducing the pressing force of the grippers, problems such as chipping of the outer circumferential portion of the substrate W can be overcome.

[0106] Also, in this preferred embodiment, the lower surface supporting portion **34** is moved up and down relative to the center chuck **20** in a state where the substrate W is supported from below by the lower surface supporting portion **34** in contact with the outer circumferential portion lower surface of the substrate W (an elevating/lowering process). This facilitates the carry-in and carry-out of the substrate W by the center robot **6** (the substrate transfer robot).

[0107] Also, in this preferred embodiment, each of the grippers **32** includes the lower surface supporting portion **34**. Therefore, the substrate W can be moved up and down with respect to the center chuck **20** by elevating/lowering the grippers **32** without providing a dedicated lower surface supporting portion.

[0108] Also, in this preferred embodiment, the center chuck **20** is a Bernoulli chuck. Although the Bernoulli chuck does not have a large enough substrate holding force to withstand high-speed rotation, there is no problem in holding the substrate W during liquid process that does not require high-speed rotation of the substrate W, and there is an advantage that the substrate W can be held in a state where the outer circumferential portion side surface of the substrate W is released or free of contact by any member. On

the other hand, in the drying process, since the substrate W is held also by the outer circumferential chuck **30**, it is possible to shorten the drying processing time by rotating the substrate W at a high speed. In addition, due to the contribution of the Bernoulli chuck to the holding of the substrate W, the pressing force of the grippers **32** of the outer circumferential chuck **30** against the outer circumferential portion side surface of the substrate can be reduced, and it is thereby made possible to prevent a defect or the like in the outer circumferential portion of the substrate W.

[0109] FIGS. **8**A to **8**D are cross-sectional views for explaining another preferred embodiment of the present invention, and show another configuration example of the hybrid chuck **10**. In this preferred embodiment, the hybrid chuck **10** includes the outer circumferential chuck **30** having the same configuration as that of the above-described preferred embodiment, and a center chuck **20**A composed of a vacuum chuck. The center chuck **20**A composed of the vacuum chuck is configured to hold the substrate W in a horizontal state at the lower surface center portion of the substrate W, and is combined and integrated such as to share the rotation axis A with the outer circumferential chuck **30** to compose the hybrid chuck **10**. The center chuck **20**A and the outer circumferential chuck **30** can hold the substrate W in a horizontal state by only one of them, and can hold the substrate W in a horizontal state by both of them.

[0110] The center chuck **20**A composed of a vacuum chuck is incorporated in the center portion of the outer circumferential base **31**. The center chuck **20**A includes a suction head **60** incorporated in the center portion of the outer circumferential base **31**. The suction head **60** includes a plurality of suction holes **61** opened in a suction surface **60***a* facing the lower surface center of the substrate W, and a suction flow path **62** communicating with the suction holes **61**. The suction flow path **62** is connected to a vacuum suction apparatus **66** via a suction path **63** formed in a hollow shaft **12** and a suction piping **64** connected thereto. A suction valve **65** is interposed in the middle of the suction piping **64**, and the suction valve **65** is controlled to be opened and closed by the controller **8**.

[0111] An example of the substrate processing is substantially similar to the case of the above-described preferred embodiment. In the following, FIG. **6** shall be referenced together.

[0112] The substrate W to be processed is carried into the processing unit **5** by the center robot **6** (step S**1**) and delivered to the outer circumferential chuck **30**. The substrate W delivered to the grippers **32** is supported in a horizontal posture by the lower surface supporting portions **34** of the grippers **32** coming into contact with the outer circumferential portion lower surface of the substrate W. At this time, as illustrated in FIG. **8**A, the grippers **32** are disposed at the upper position in the open state. Also, the suction by the suction head **60** has been stopped, and thus the center chuck **20**A (the Bernoulli chuck) is in an inactive state (a non-suctioning state, a non-holding state).

[0113] Next, by the control of the cam driving mechanism **51**, the grippers **32** are lowered to the lower position in a state where the substrate W is supported by the lower surface supporting portions **34** (step S**2**). Further, under the control of the cam driving mechanism **51**, the grippers **32** are brought into a closed state, and the side surface contact portions **33** of the grippers **32** comes into contact with the outer circumferential portion side surface of the substrate W. Thereby, alignment, that is, centering is performed to align the center of the substrate W with the rotation axis A (step S**3**; see FIG. **8**B).

[0114] Next, the controller **8** opens the suction valve **65** to start suction by the suction head **60**, thereby the center chuck **20**A (vacuum chuck) is brought into an operating state (a suctioning state, a holding state) (step S**4**; see FIG. **8**C). Then, by the control of the cam driving mechanism **51** by the controller **8**, the grippers **32** are brought into the open state (the non-holding state), and the holding by the outer circumferential chuck **30** is released. As a result, the substrate W is delivered from the outer circumferential chuck **30** to the center chuck **20**A, and the substrate W is held only by the center chuck **20**A. At this time, the grippers **32** are not in contact with either the side surface or the lower surface of an outer circumferential portion (a bevel) of the substrate W, and the substrate W is held by the center chuck **20**A in a bevel-free state. As necessary, the grippers **32** may be slightly lowered in order to secure an interval between the outer circumferential portion lower surface of the substrate W and the lower surface supporting portions **34** thereof.

[0115] In this manner, the liquid process to supply the processing liquid to the surface of the substrate W is performed while rotating the substrate W in a state where the substrate W is held only by the center chuck **20**A (step S**5**; a liquid process; see FIG. **8**C). That is, the substrate rotating mechanism **11** is controlled to cause the hybrid chuck **10** to rotate so that the substrate W is rotated around the rotation axis A at a predetermined liquid processing rotation speed (for example, 800 rpm). Also, when the processing liquid valve **17** is opened, the processing liquid is discharged from the processing liquid nozzle **15** toward the surface (here, the upper surface) of the substrate W. After the liquid process is performed for a predetermined liquid process time, the discharge of the processing liquid from the processing liquid nozzle **15** is stopped.

[0116] Next, at the start of a drying process of rotating the substrate W around the rotation axis A at a predetermined drying rotation speed (for example, 2500 rpm) to spin off the liquid, the controller **8** controls the cam driving mechanism **51** to control the grippers **32** to the closed state (holding state). That is, the side surface contact portions **33** of the grippers **32** come into contact with the outer circumferential portion side surface of the substrate W, and holding of the substrate by the outer circumferential chuck **30** is started. That is, the substrate W is held at the lower surface center portion by the center chuck **20**A and is held at the outer circumferential portion by the outer circumferential chuck **30** (step S**6**; see FIG. **8**D).

[0117] The controller **8** executes pressing force control to adjust the pressing force under the control of the cam driving mechanism **51** (step S**8**). More specifically, the pressing force is controlled by controlling the torque generated by the electric motor **53**. The pressing force is controlled to a value smaller than an assumed pressing force required when the substrate W is not held by the center chuck **20**A but the substrate W is held only by the outer circumferential chuck **30**, and the substrate W is rotated at the drying rotation speed. That is, the torque generated by the electric motor **53** is controlled such that such a pressing force is achieved.

[0118] The drying process is performed while performing such pressing force control (step S**8**). That is, the controller **8** accelerates the rotation speed of the substrate W to the drying rotation speed by controlling the substrate rotating

mechanism **11**, and maintains the drying rotation speed over a predetermined drying time. Thereafter, the rotation of the substrate W is stopped, and the drying process is terminated.

[0119] Next, the controller **8** releases the suctioning holding by the center chuck **20**A (vacuum chuck) by closing the suction valve **65** and stopping the suction by the suction head **60** (step S**9**). As a result, the substrate W is brought into a state where being held only by the outer circumferential chuck **30**, and the substrate W is transferred from the center chuck **20**A to the outer circumferential chuck **30**.

[0120] Thereafter, the controller **8** controls the cam driving mechanism **51**, thereby brings the grippers **32** into the open state to separate the side surface contact portions **33** from the outer circumferential portion side surface of the substrate W, and further, elevates the grippers **32** to the elevated position in a state where the lower surface supporting portions **34** supports the outer circumferential portion lower surface of the substrate W (step S**10**; see FIG. **8**A). Thereafter, the center robot **6** picks up the processed substrate W from the grippers **32** in the open state and carries out the substrate W (step S**11**). In this way, the processing on one substrate W is ended.

[0121] Since the substrate W can be held in a state where the outer circumferential portion side surface of the substrate W is released by using the center chuck **20**A composed of a vacuum chuck, the outer circumferential portion side surface of the substrate can be thoroughly processed in the liquid process. On the other hand, in the drying process, since the substrate W is held also by the outer circumferential chuck **30**, it is not necessary to strongly suction the lower surface center portion of the substrate W by the center chuck **20**A (vacuum chuck), and thus, it is possible to shorten the drying process time by rotating the substrate W at a high speed while preventing generation of a suction mark. In addition, due to the contribution of the center chuck **20**A (the vacuum chuck) to the holding of the substrate W, the pressing force of the grippers **32** of the outer circumferential chuck **30** against the outer circumferential portion side surface of the substrate can be reduced, and it is thereby made possible to prevent a defect or the like in the outer circumferential portion of the substrate W.

[0122] FIGS. **9**A and **9**B are diagrams for explaining still another preferred embodiment of the present invention, and show another configuration example of the outer circumferential chuck **30**. In FIGS. **9**A and **9**B, the corresponding portions of the parts illustrated in FIGS. **5**A, **5**B, and **5**C are indicated with the same reference signs as in FIGS. **5**A, **5**B, and **5**C. It is noted that, a case where the center chuck **20** is a Bernoulli chuck is exemplified here, but the center chuck may be a vacuum chuck (see FIGS. **8**A to **8**D).

[0123] The outer circumferential base **31** includes a base plate **41** fixed to the shaft **12** and a base cover **42**. The base plate **41** is accommodated in the base cover **42**. Each of the grippers **32** is coupled to the base plate **41** via a bearing **44**A. The gripper **32** includes a shaft portion **35** that passes through the base plate **41** in the up/down direction, further passes through a top surface portion **43** of the base cover **42** and protrudes upward, and the lower surface supporting portion **34** and the side surface contact portion **33** are provided at an upper end portion of the shaft portion **35**. The bearing **44** couples the shaft portion **35** of the gripper **32** to the base plate **41** such as to be circumrotatable about the circumrotation axis **36**. In this preferred embodiment, the up/down movement of the gripper **32** with respect to the base plate **41** is restricted, and thus the gripper **32** does not have a function as a lift pin. The side surface contact portion **33** is erected at a position eccentric from the circumrotation axis **36**. Therefore, the distance between the side surface contact portion **33** and the outer circumferential portion side surface of the substrate W changes by the circumrotation of the gripper **32** about the circumrotation axis **36**.

[0124] A gripper driving mechanism **45** to turn the gripper **32** around the circumrotation axis **36** is provided. The gripper driving mechanism **45** includes a cam mechanism **46** and a cam driving mechanism **51** that applies a driving force to the cam mechanism **46**.

[0125] The cam mechanism **46** includes a cam follower **47**A fixed to a lower end of the shaft portion **35** of the gripper **32** and the cam lever **49** coupled to the cam follower **47**A. The cam lever **49** is accommodated in the base cover **42** and is movable up and down below the base plate **41**. The cam follower **47**A has the cam groove **48** inclined with respect to the up/down direction, and a drive end **50** of the cam lever **49** is coupled to the cam groove **48**. A compression coil spring **56** that pushes down the cam lever **49** is disposed between the cam lever **49** and the lower surface of the base plate **41**.

[0126] The cam driving mechanism **51** is disposed in a non-rotating system outside the base cover **42**. The cam driving mechanism **51** includes the ball-screw mechanism **52**, the electric motor **53** that applies a driving force to the ball-screw mechanism **52**, and the driving rod **54** that is moved up and down by the ball-screw mechanism **52**. A ring-shaped elevating/lowering plate **57** surrounding the rotation axis A is coupled to an upper end of the driving rod **54**. A ring-shaped ball bearing **58** surrounding the rotation axis A is disposed between the elevating/lowering plate **57** and the cam lever **49**. One bearing ring of the ball bearing **58** is coupled to the elevating/lowering plate **57**, and the other bearing ring of the ball bearing **58** faces the cam lever **49** such as to be able to come into contact therewith.

[0127] When the elevating/lowering plate **57** is elevated by driving the cam driving mechanism **51**, the ball bearing **58** is elevated and comes into contact with the cam lever **49**. When the elevating/lowering plate **57** is further elevated, as illustrated in FIG. **9**B, the driving force is transmitted to the cam lever **49** via the ball bearing **58**, and the cam lever **49** can be elevated while the compression coil spring **56** is compressed. Then, the drive end **50** of the cam lever **49** moves in the cam groove **48** of the cam follower **47**A to displace the cam follower **47**A radially outward. As a result, the gripper **32** circumrotates around the circumrotation axis **36**. As a result, the distance between the side surface contact portion **33** and the rotation axis A is shortened, and the side surface contact portion **33** approaches the outer circumferential portion side surface of the substrate W. As a result, the side surface contact portion **33** can be brought into contact with the outer circumferential portion side surface of the substrate W, and the side surface contact portion **33** can be pressed against the outer circumferential portion side surface of the substrate W. That is, the gripper **32** can be brought into a closed state. The pressing force of the side surface contact portion **33** against the outer circumferential portion side surface of the substrate W is continuously variable by changing the driving force applied from the cam driving mechanism **51** including the ball-screw mechanism **52**.

[0128] On the other hand, when the elevating/lowering plate **57** is lowered by the cam driving mechanism **51**, the

compression coil spring **56** pushes down the cam lever **49**. As a result, the drive end **50** of the cam lever **49** moves downward in the cam groove **48** to displace the cam follower **47**A radially inward. As a result, as illustrated in FIG. **9**A, the side surface contact portion **33** is displaced in a direction away from the rotation axis A, and is separated from the outer circumferential portion side surface of the substrate W. As a result, the gripper **32** can be brought into an open state.

[0129] The position of the substrate W when the gripper **32** supports the substrate W by the lower surface supporting portion **34** is a transfer position at which the substrate W is transferred between the hand **6***a* of the center robot **6** (the substrate transfer robot) and the hybrid chuck **10** (more specifically, the outer circumferential chuck **30**). This position is also a position where the substrate W can be held by the center chuck **20**. Therefore, as illustrated in FIG. **9**A, the substrate W can be held by the lower surface center portion of the substrate W by the center chuck **20**, and the substrate W can be held by the outer circumferential portion of the substrate W by the outer circumferential chuck **30**.

[0130] Although preferred embodiments of the present invention have been described above, the present invention can be implemented in yet other preferred embodiments.

[0131] For example, in the above-described preferred embodiments, each of the grippers **32** includes the side surface contact portion **33** and the lower surface supporting portion **34**, but the lower surface supporting portion may be formed of a member or members other than the gripper **32**.

[0132] Also, in the above-described preferred embodiments, an example has been described in which the cam driving mechanism **51** has a configuration in which the pressing force of the grippers **32** against the outer circumferential side surface of the substrate is continuously variable, but the pressing force may be variable stepwise. In this case, a drive source of the cam driving mechanism **51** may be an air cylinder. Also, the pressing force is not necessarily variable, and the pressing force of the grippers **32** in the closed state may be designed to be smaller than an assumed pressing force required when the substrate W is held only by the outer circumferential chuck **30** and the substrate W is rotated at a drying rotation speed.

[0133] While preferred embodiments of the present invention have been described in detail above, these are merely specific examples used to clarify the technical content of the present invention, and the present invention should not be interpreted as being limited to these specific examples, and the scope of the present invention shall be limited only by the appended claims.

What is claimed is:

1. A substrate processing method comprising:

a liquid process to supply a processing liquid to a surface of a substrate while holding the substrate in a horizontal state by a center chuck that holds the substrate in a lower surface center portion of the substrate; and

a drying process to spin off the liquid on the surface of the substrate by rotating the substrate around a rotation axis along an up/down direction while holding the substrate in a horizontal state by the center chuck and gripping the substrate at an outer circumferential portion of the substrate by an outer circumferential chuck including a plurality of grippers each having a side surface contact portion that comes into contact with an outer circumferential portion side surface of the substrate.

2. The substrate processing method according to claim **1**, wherein the side surface contact portion of each of the plurality of grippers is retreated from the outer circumferential portion side surface of the substrate in the liquid process, and is brought into contact with the outer circumferential portion side surface of the substrate in the drying process.

3. The substrate processing method according to claim **1**, further comprising a centering process to center the substrate by bringing the side surface contact portion of each of the plurality of grippers into contact with the outer circumferential portion side surface of the substrate, wherein

after the centering process, the liquid process is performed by retreating the side surface contact portion of each of the plurality of grippers from the outer circumferential portion of the substrate and bringing the side surface contact portion of each of the plurality of grippers into a non-contact state of not being in contact with the substrate.

4. The substrate processing method according to claim **1**, wherein, in the drying process, the substrate is rotated around the rotation axis at a predetermined drying rotation speed, and the side surface contact portion of each of the plurality of grippers is pressed against the outer circumferential portion side surface of the substrate with a pressing force smaller than an assumed pressing force required when the substrate is rotated at the drying rotation speed while being held by the outer circumferential chuck without being held by the center chuck.

5. The substrate processing method according to claim **1**, further comprising an elevating/lowering process to move the lower surface supporting portion up and down relative to the center chuck in a state where the substrate is supported from below by the lower surface supporting portion in contact with an outer circumferential portion lower surface of the substrate.

6. The substrate processing method according to claim **5**, wherein each of the plurality of grippers includes the lower surface supporting portion.

7. The substrate processing method according to claim **1**, wherein the center chuck includes a Bernoulli chuck.

8. The substrate processing method according to claim **1**, wherein the center chuck includes a vacuum chuck.

9. A substrate processing apparatus comprising:

a hybrid chuck including a center chuck to hold a substrate at a lower surface center portion of the substrate and an outer circumferential chuck that includes a plurality of grippers that come into contact with an outer circumferential portion side surface of the substrate, the center chuck and the outer circumferential chuck being disposed to share a predetermined rotation axis along a vertical direction;

a lift to move the plurality of grippers up and down relative to the center chuck; and

a gripper actuator to displace the plurality of grippers between a closed state where each of the plurality of grippers is in contact with the outer circumferential portion side surface of the substrate and an open state where each of the plurality of grippers is retreated from the outer circumferential portion side surface of the substrate.

10. The substrate processing apparatus according to claim **9**, wherein each of the plurality of grippers includes a side surface contact portion that comes into contact with the

outer circumferential portion side surface of the substrate and a lower surface supporting portion that comes into contact with an outer circumferential portion lower surface of the substrate.

11. The substrate processing apparatus according to claim **10**, further comprising a controller configured or programmed to control the lift and the gripper actuator, wherein

the controller is configured or programmed

to move the plurality of grippers up and down relative to the center chuck in a state where the substrate is supported from below by the lower surface supporting portion.

12. The substrate processing apparatus according to claim **11**, wherein

the controller is configured or programmed to further control the center chuck, and wherein

the controller is configured or programmed to bring the side surface contact portion of each of the plurality of grippers into contact with the outer circumferential portion side surface of the substrate to perform centering of the substrate, then retreat the side surface contact portion from the outer circumferential portion side surface of the substrate, and thereafter causes the center chuck to hold the substrate.

13. The substrate processing apparatus according to claim **9**, further comprising:

a processing liquid nozzle to supply a processing liquid to the substrate held by the hybrid chuck; and

a controller configured or programmed to control the center chuck and the outer circumferential chuck, wherein

the controller is configured or programmed

to control the center chuck to be in a holding state in which the center chuck holds the substrate and to control the outer circumferential chuck to be in a non-holding state in which the outer circumferential chuck is not in contact with the substrate in a liquid process in which the processing liquid is supplied from the processing liquid nozzle to the substrate held by the hybrid chuck, and

to control both the center chuck and the outer circumferential chuck to be in a holding state in which both the center chuck and the outer circumferential chuck hold the substrate in a drying process to stop supplying of the processing liquid from the processing liquid nozzle and to dry the substrate by rotating the substrate at a predetermined drying rotation speed around the rotation axis.

14. The substrate processing apparatus according to claim **13**, wherein the controller is configured or programmed to rotate the substrate around the rotation axis at the predetermined drying rotation speed, and to control the gripper actuator such that the plurality of grippers are pressed against the outer circumferential portion side surface of the substrate with a pressing force smaller than an assumed pressing force required when the substrate is rotated at the predetermined drying rotation speed while being held by the outer circumferential chuck without being held by the center chuck, in the drying process.

15. The substrate processing apparatus according to claim **14**, wherein the gripper actuator is configured to vary the pressing force of the plurality of grippers against the outer circumferential portion side surface of the substrate.

16. The substrate processing apparatus according to claim **9**, wherein the center chuck includes a Bernoulli chuck.

17. The substrate processing apparatus according to claim **9**, wherein the center chuck includes a vacuum chuck.

* * * * *