US 20250276519A1

(19) United States
(12) Patent Application Publication
KOIKE et al.
(10) Pub. No.: US 2025/0276519 A1
(43) Pub. Date: Sep. 4, 2025

(54) **LIQUID EJECTING HEAD**

(71) Applicant: **SEIKO EPSON CORPORATION**, Tokyo (JP)

(72) Inventors: **Harunobu KOIKE**, MATSUMOTO-SHI (JP); **Toshihiro SHIMIZU**, FUJIMI-MACHI (JP); **Takatoshi YAMAZAKI**, SHIOJIRI-SHI (JP)

(21) Appl. No.: **19/068,069**

(22) Filed: **Mar. 3, 2025**

(30) **Foreign Application Priority Data**

Mar. 4, 2024 (JP) 2024-031943

Publication Classification

(51) **Int. Cl.**
B41J 2/14 (2006.01)
H10N 30/853 (2023.01)

(52) **U.S. Cl.**
CPC ***B41J 2/14209*** (2013.01); ***H10N 30/8536*** (2023.02); *B41J 2002/14491* (2013.01)

(57) **ABSTRACT**

A liquid ejecting head includes a piezoelectric element including an individual electrode, a piezoelectric layer, and a common electrode, and a vibration plate, and the individual electrode is individually provided for each of a plurality of piezoelectric elements, the common electrode is provided in common for the plurality of piezoelectric elements, the piezoelectric layer is made of a piezoelectric material containing lead as a constituent element, each of the individual electrode and the common electrode contains lead, and a lead content in the individual electrode is lower than a lead content in the common electrode.

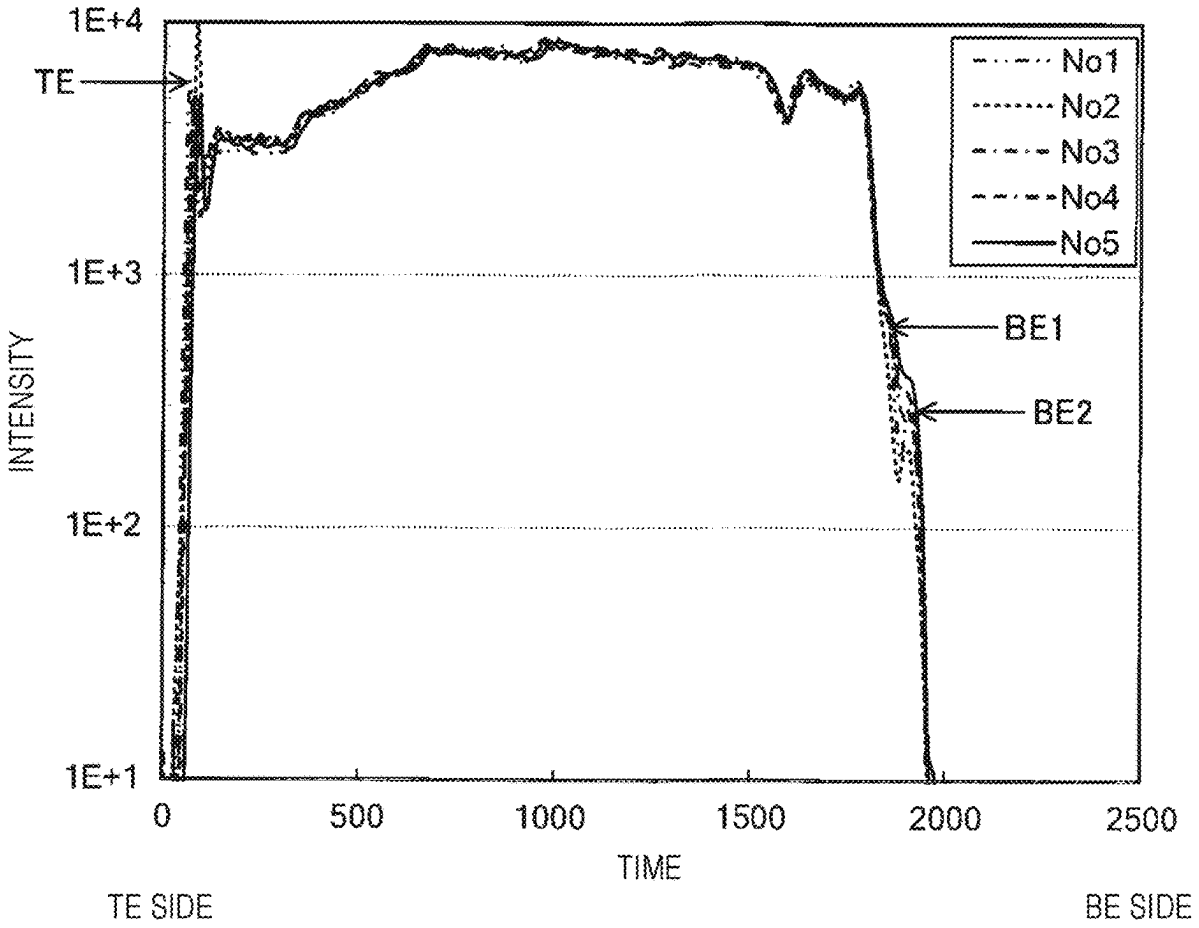

FIG. 1

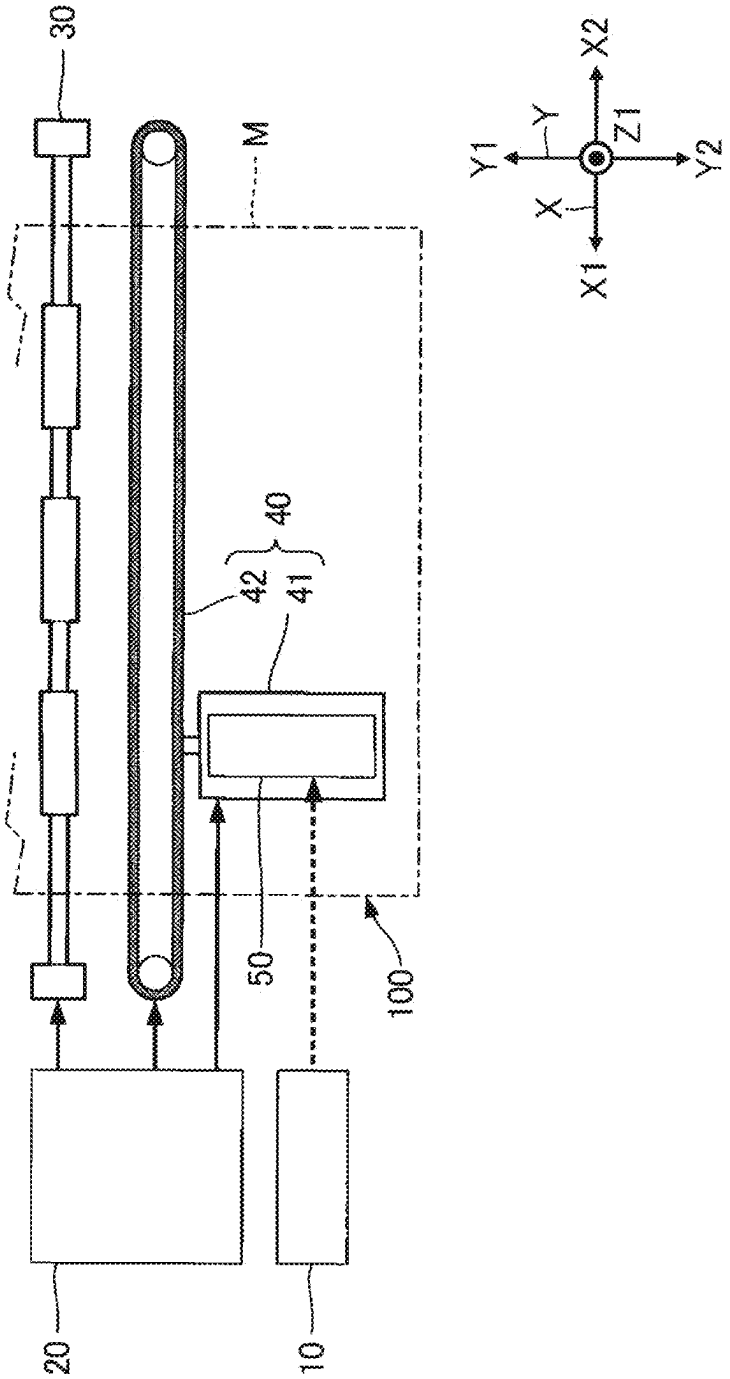

FIG. 2

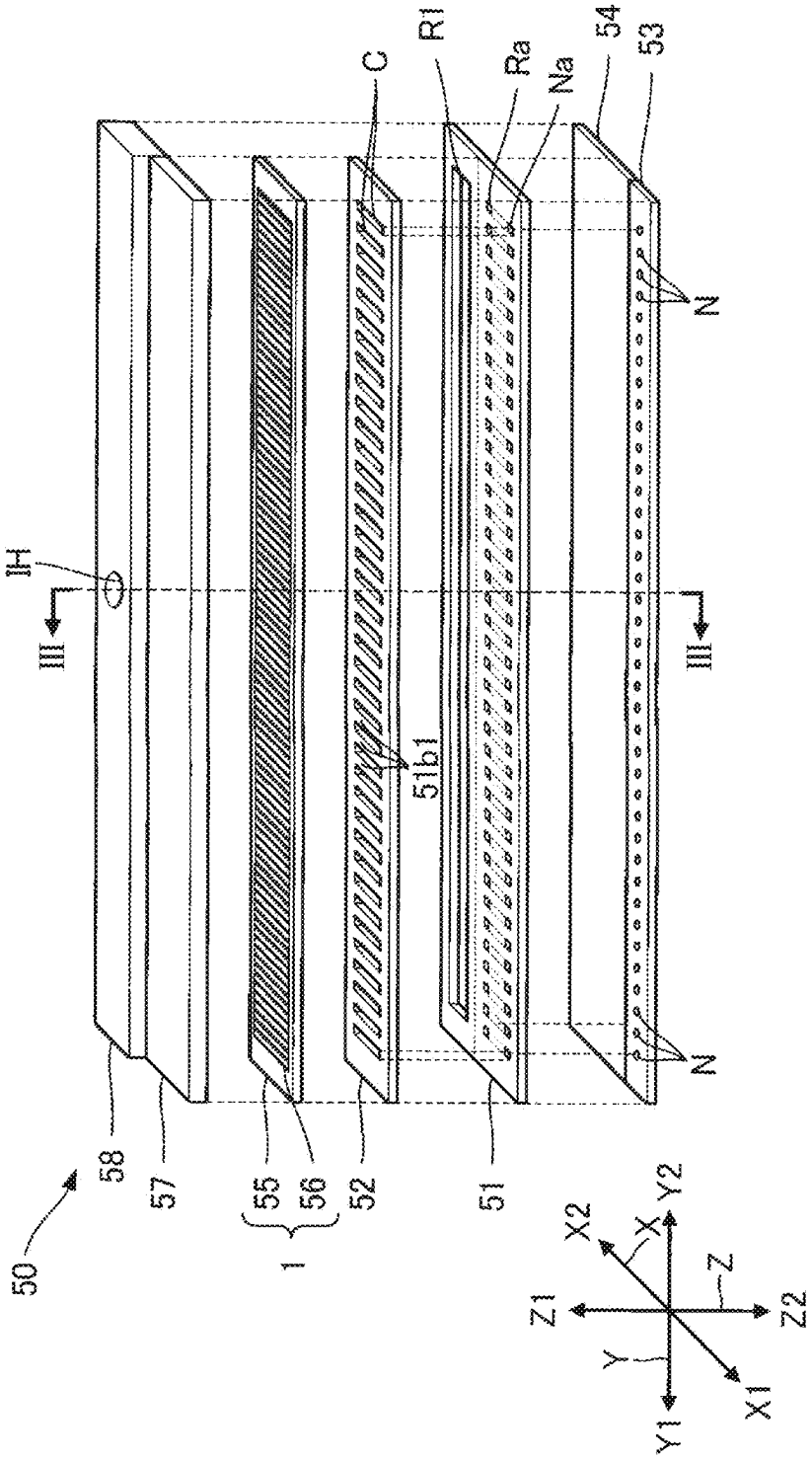
50
58
57
55
56
1
52
51
51b1
C
R1
Ra
Na
54
53
N
N
IH
III
III
X1
X2
X
Y1
Y2
Y
Z1
Z2
Z

FIG. 3

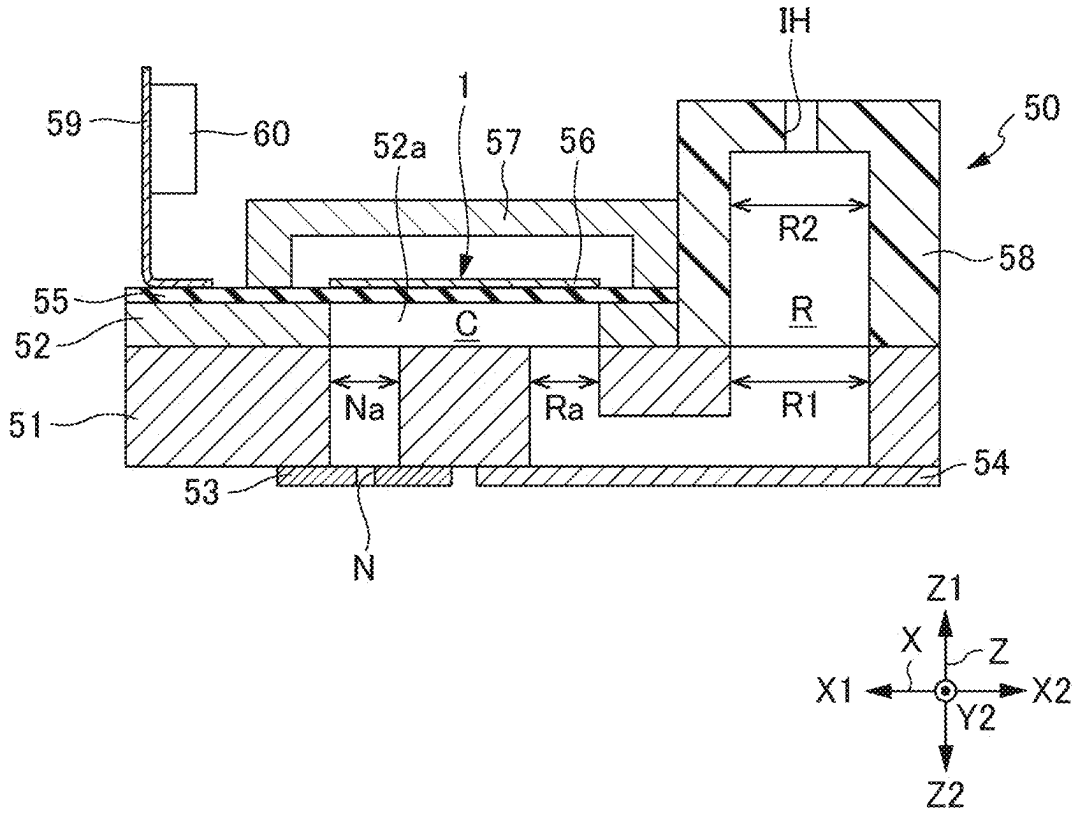
IH
1
50
59
60
52a
57
56
R2
58
55
C
R
52
Na
Ra
R1
51
54
53
N
Z1
X
Z
X1
X2
Y2
Z2

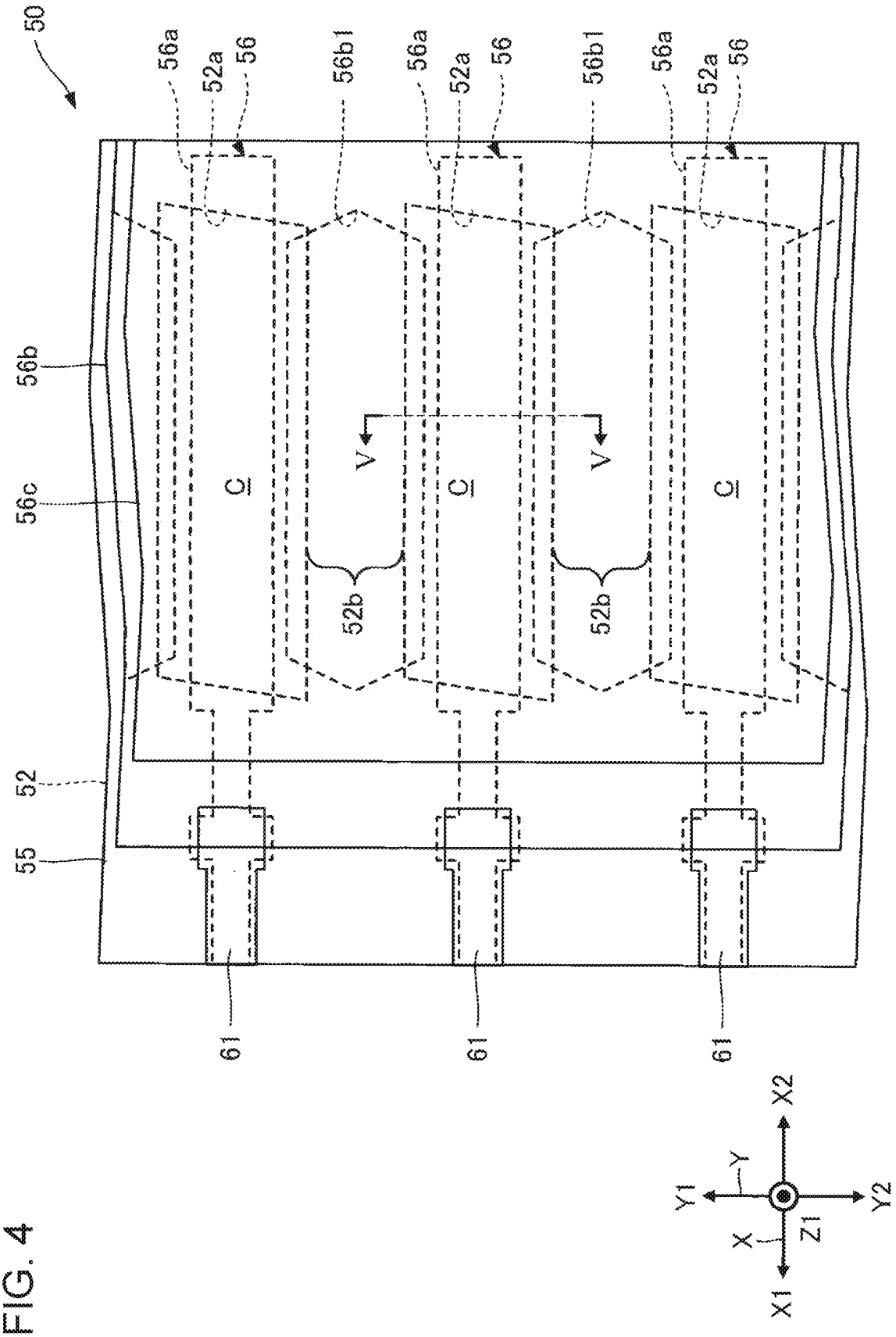
50
56a
52a
56
56b1
56a
52a
56
56b1
56a
52a
56
56b
56c
C
V
C
V
C
52b
52b
52
55
61
61
61
X2
Y
Y1
Y2
X
Z1
X1

FIG. 4

FIG. 5

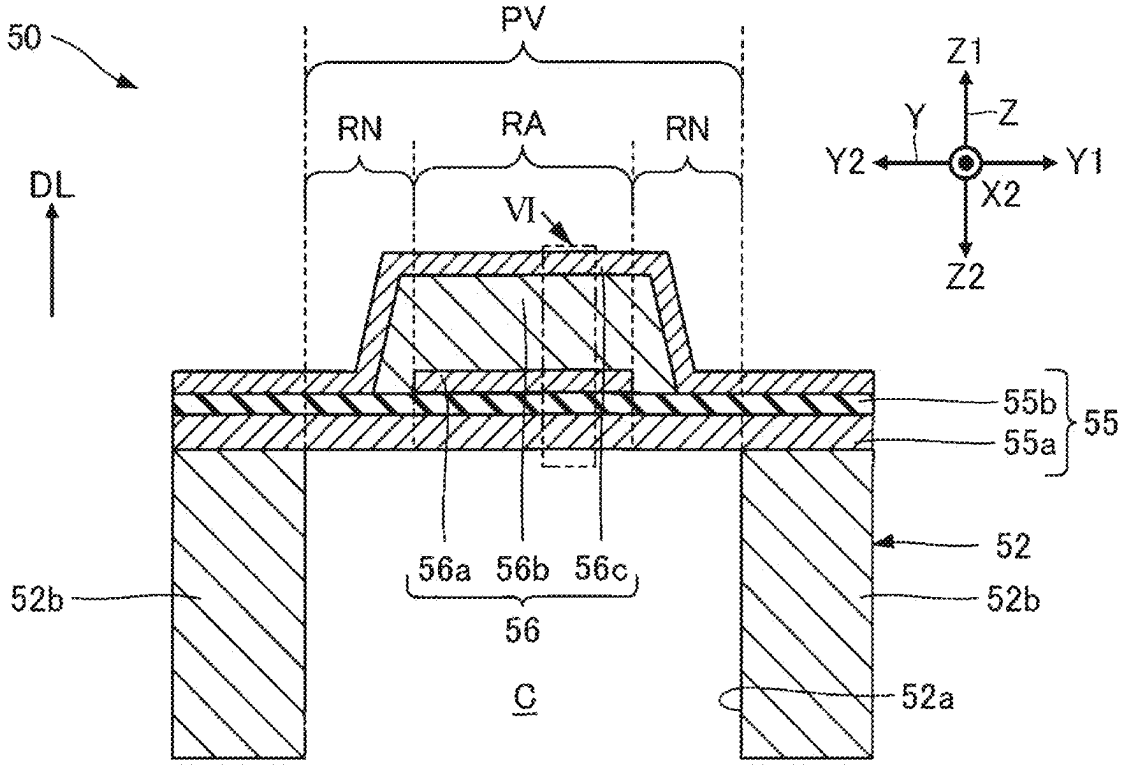
50
PV
RN
RA
RN
DL
VI
Z1
Z
Y
Y2
Y1
X2
Z2
55b
55
55a
52
52b
56a
56b
56c
56
52b
C
52a

FIG. 6

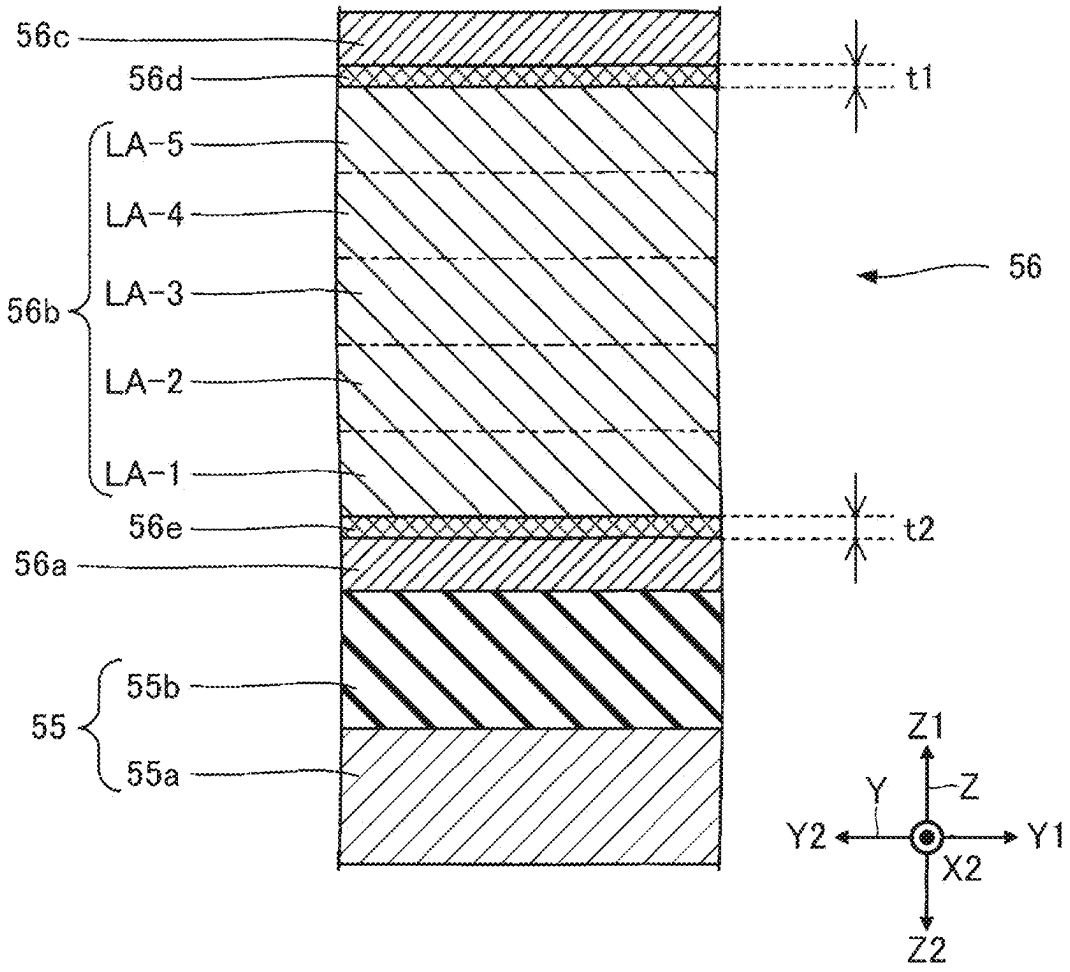
56c
56d
t1
LA-5
LA-4
56
56b
LA-3
LA-2
LA-1
56e
t2
56a
55b
55
55a
Z1
Y
Z
Y2
Y1
X2
Z2

FIG. 7

SAMPLE No.	PEAK INTENSITY			PEAK INTENSITY RATIO		EVALUATION		
	COMMON ELECTRODE	INDIVIDUAL ELECTRODE		BE1/TE	BE2/TE	ADHESION	AMOUNT OF DISPLACEMENT	OVERALL
	TE	BE1 (1ST TIME)	BE2 (2ND TIME)					
1	5399.08	627.622	291.126	0.116246	0.0539214	A	A	A
2	9778.14	263.991	200.269	0.026998	0.0204813	A	A	A
3	5030.06	652.587	266.153	0.129738	0.0529125	A	A	A
4	4866.82	671.948	303.211	0.138067	0.0623017	B	B	B
5	4883.84	628.472	384.280	0.128684	0.0786839	A	A	A

FIG. 8

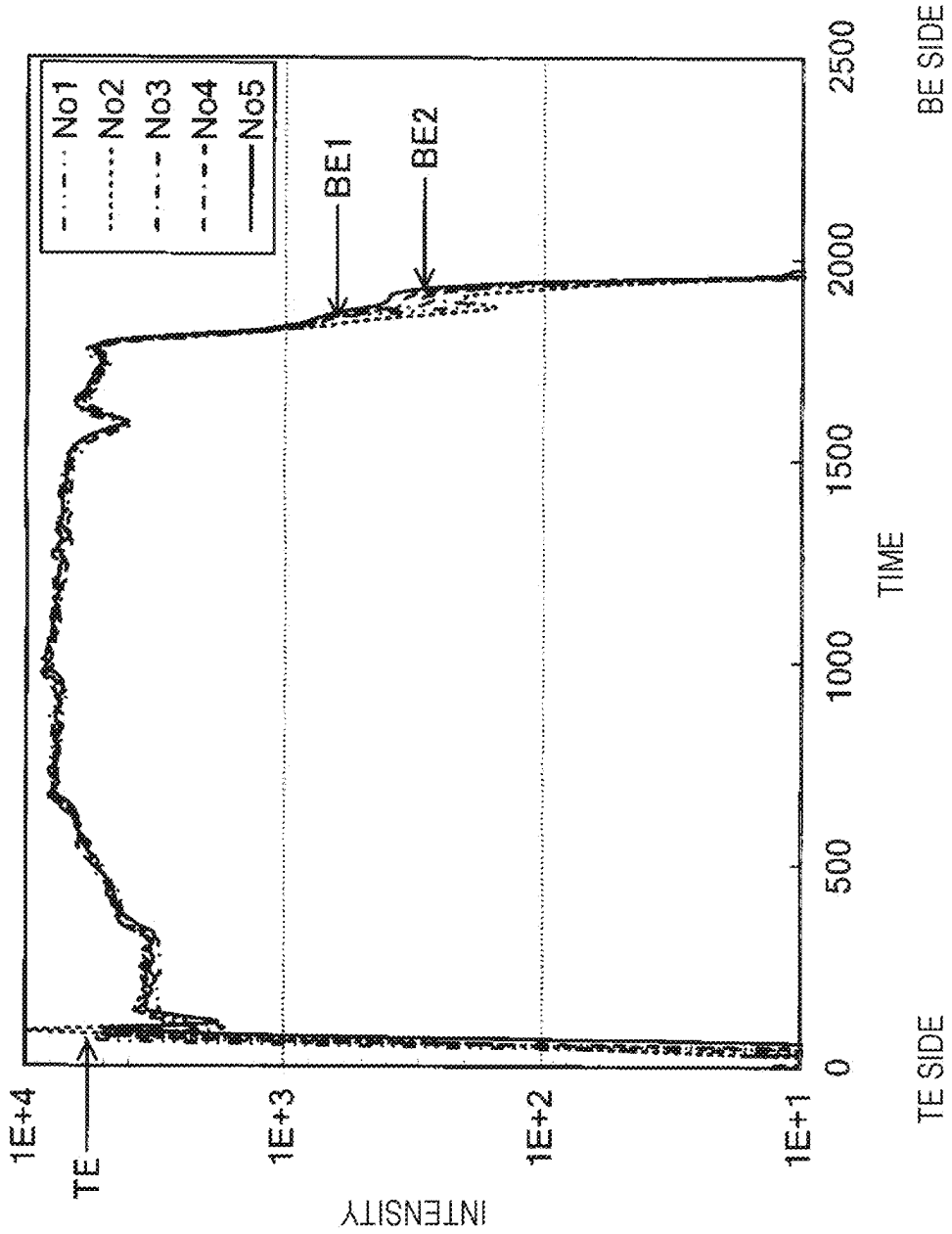
No1
No2
No3
No4
No5
BE1
BE2
TE
1E+4
1E+3
1E+2
1E+1
INTENSITY
0
500
1000
1500
2000
2500
TIME
TE SIDE
BE SIDE

FIG. 9

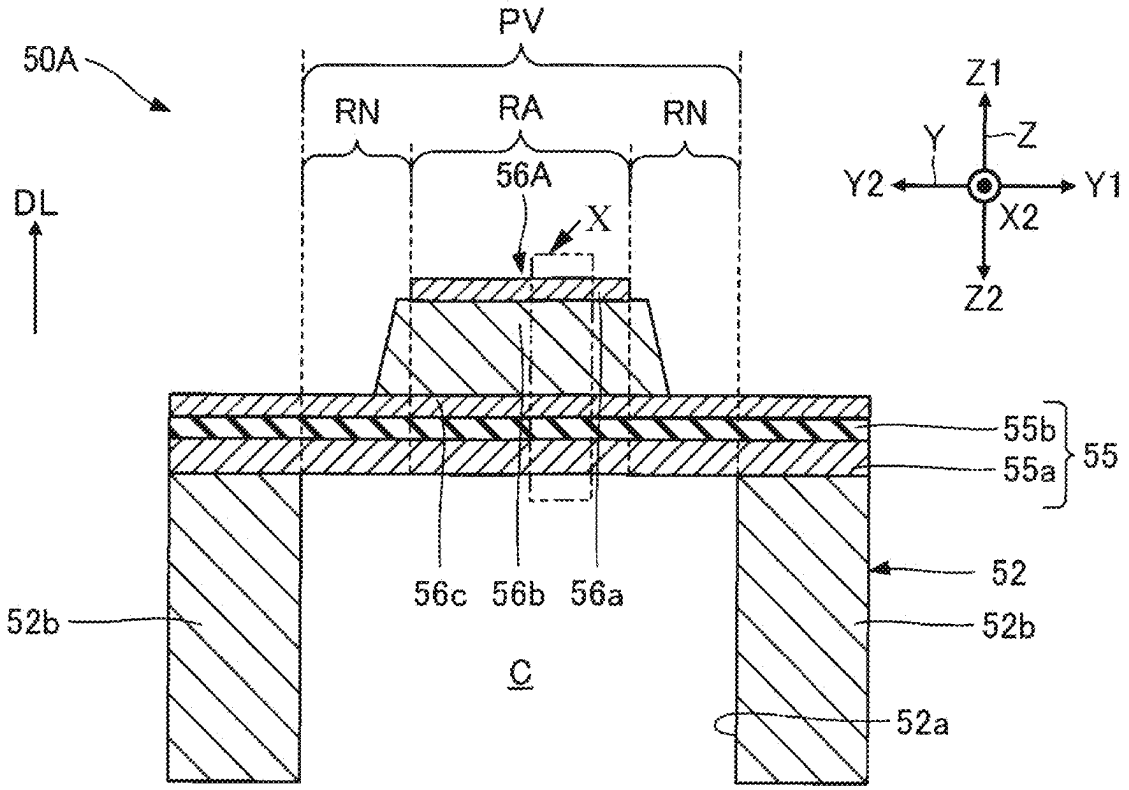
PV
50A
RN
RA
RN
56A
X
DL
Z1
Y
Z
Y2
Y1
X2
Z2
55b
55a
55
52
56c
56b
56a
52b
52b
C
52a

FIG. 10

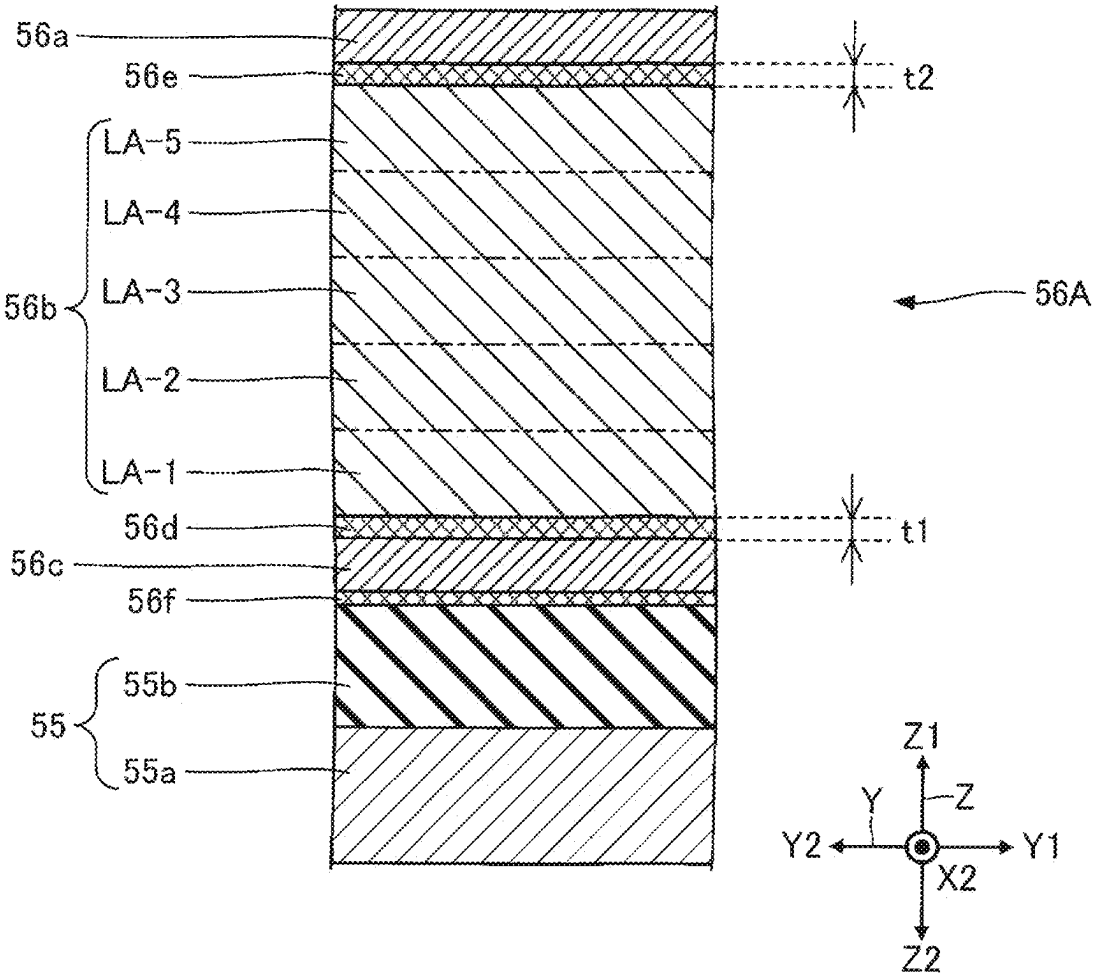
56a
56e
t2
LA-5
LA-4
LA-3
LA-2
LA-1
56b
56A
56d
t1
56c
56f
55b
55
55a
Z1
Y
Z
Y2
Y1
X2
Z2

FIG. 11

SAMPLE No.	PEAK INTENSITY		PEAK INTENSITY RATIO
	INDIVIDUAL ELECTRODE	COMMON ELECTRODE	BE/TE
	TE	BE	
6	0.210	0.543	0.386
7	0.988	12.3	0.080

FIG. 12

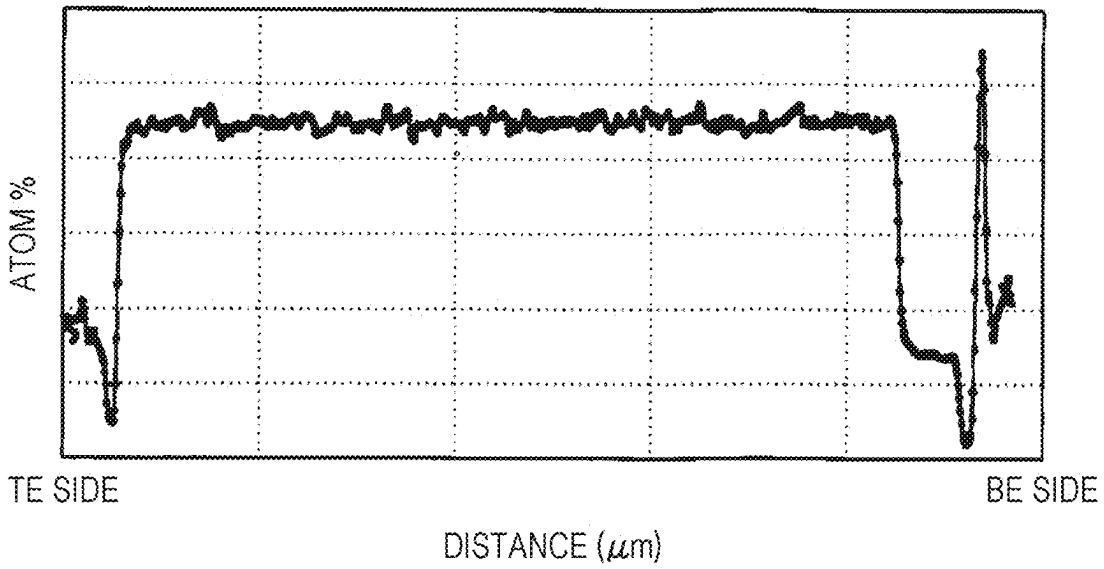
ATOM %
TE SIDE
BE SIDE
DISTANCE (μm)

FIG. 13

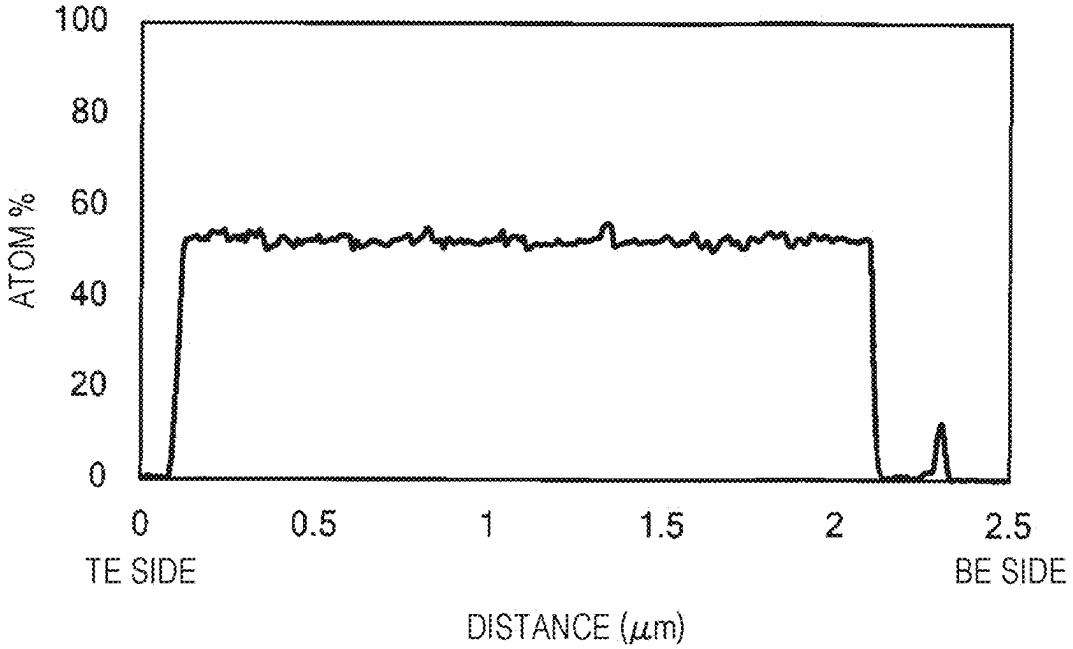
100
80
60
40
20
0
ATOM %
0
0.5
1
1.5
2
2.5
TE SIDE
BE SIDE
DISTANCE (μm)

LIQUID EJECTING HEAD

[0001] The present application is based on, and claims priority from JP Application Serial Number 2024-031943, filed Mar. 4, 2024, the disclosure of which is hereby incorporated by reference herein in its entirety.

BACKGROUND

1. Technical Field

[0002] The present disclosure relates to a liquid ejecting head.

2. Related Art

[0003] In a liquid ejecting apparatus represented by a piezoelectric ink jet printer, a liquid ejecting head that ejects a liquid such as ink is used. For example, the head described in JP-A-2002-319714 includes a vibration plate and a piezoelectric element. The piezoelectric element includes a lower electrode, a piezoelectric film, and an upper electrode that are sequentially stacked on the vibration plate.

[0004] In the head described in JP-A-2002-319714, the relationship between the lead contents of the lower and upper electrodes is not considered, and there is room for improvement.

SUMMARY

[0005] In order to solve the above-described problem, according to an aspect of the present disclosure, there is provided a liquid ejecting head including a piezoelectric element including an individual electrode, a piezoelectric layer, and a common electrode, and a vibration plate, in which the individual electrode is individually provided for each of a plurality of piezoelectric elements, the common electrode is provided in common for the plurality of piezoelectric elements, the piezoelectric layer is made of a piezoelectric material containing lead as a constituent element, each of the individual electrode and the common electrode contains lead, and a lead content in the individual electrode is lower than a lead content in the common electrode.

BRIEF DESCRIPTION OF THE DRAWINGS

[0006] FIG. **1** is a configuration diagram schematically illustrating a liquid ejecting apparatus including a liquid ejecting head according to a first embodiment.

[0007] FIG. **2** is an exploded perspective view of a liquid ejecting head according to the first embodiment.

[0008] FIG. **3** is a sectional view taken along line III-III in FIG. **2**.

[0009] FIG. **4** is a plan view illustrating a part of the liquid ejecting head according to the first embodiment.

[0010] FIG. **5** is a sectional view taken along line V-V in FIG. **4**.

[0011] FIG. **6** is an enlarged view of a portion VI in FIG. **5**.

[0012] FIG. **7** is a table illustrating a relationship between measurement results of lead contained in common electrodes and individual electrodes of samples No. 1 to No. 5 and evaluation of the liquid ejecting head.

[0013] FIG. **8** is a graph illustrating results of measurement of lead contained in the common electrodes and the individual electrodes of samples No. 1 to No. 5 by SIMS.

[0014] FIG. **9** is a schematic sectional view of a liquid ejecting head according to a second embodiment.

[0015] FIG. **10** is an enlarged view of a portion X in FIG. **9**.

[0016] FIG. **11** is a table illustrating measurement results of lead contained in the common electrodes and the individual electrodes of samples No. 6 and No. 7.

[0017] FIG. **12** is a graph illustrating results of measurement of lead contained in the common electrode and the individual electrode of sample No. 6 by EDS.

[0018] FIG. **13** is a graph illustrating results of measurement of lead contained in the common electrode and the individual electrode of sample No. 7 by EDS.

DESCRIPTION OF EMBODIMENTS

[0019] Hereinafter, preferred embodiments according to the present disclosure will be described with reference to the attached drawings. In the drawings, the dimension and scale of each portion are different from the actual ones as appropriate, and some portions are schematically illustrated to facilitate understanding. In addition, the scope of the present disclosure is not limited to these embodiments unless otherwise stated to limit the present disclosure in the following description.

[0020] The following description uses an X axis, a Y axis, and a Z axis that intersect with each other as appropriate. In addition, in the following description, one direction along the X axis is an X**1** direction, and the direction opposite to the X**1** direction is an X**2** direction. Similarly, directions opposite to each other along the Y axis are a Y**1** direction and a Y**2** direction. Moreover, directions opposite to each other along the Z axis are a Z**1** direction and a Z**2** direction. The Z**1** direction is an example of a "stacking direction". In addition, viewing in the direction along the Z axis may be referred to as "plan view".

[0021] Here, typically, the Z axis is a vertical axis, and the Z**2** direction corresponds to a vertically downward direction. However, the Z axis does not have to be the vertical axis. In addition, the X axis, the Y axis, and the Z axis are typically orthogonal to each other, but are not limited thereto. For example, the X axis, the Y axis, and the Z axis may intersect with each other at an angle in a range of 80° or more and 100° or less.

1. Embodiment

1-1. Overall Configuration of Liquid Ejecting Apparatus

[0022] FIG. **1** is a configuration diagram schematically illustrating a liquid ejecting apparatus **100** including a liquid ejecting head **50** according to a first embodiment. The liquid ejecting apparatus **100** is an ink jet printing apparatus that ejects ink, which is an example of a liquid, as droplets onto a medium M. The medium M is typically a printing paper sheet. The medium M is not limited to the printing paper sheet and may be a printing target made of any material such as a resin film or a fabric.

[0023] As illustrated in FIG. **1**, the liquid ejecting apparatus **100** includes a liquid container **10**, a control unit **20**, a transport mechanism **30**, a moving mechanism **40**, and a liquid ejecting head **50**.

[0024] The liquid container **10** is a container that stores ink. Examples of the specific form of the liquid container **10**

include a cartridge attachable to and detachable from the liquid ejecting apparatus **100**, a bag-shaped ink pack formed of a flexible film, and an ink tank refillable with the ink. A type of ink to be stored in the liquid container **10** is not particularly limited and is selected in any desired way.

[0025] The control unit **20** includes, for example, a processing circuit such as a central processing unit (CPU) or a field-programmable gate array (FPGA) and a storage circuit such as a semiconductor memory to control the operation of each element of the liquid ejecting apparatus **100**.

[0026] The transport mechanism **30** transports the medium M in the Y**2** direction under the control of the control unit **20**. The moving mechanism **40** causes the liquid ejecting head **50** to reciprocate in the X**1** direction and the X**2** direction under the control of the control unit **20**. In the example illustrated FIG. **1**, the moving mechanism **40** includes a substantially box-shaped carriage **41** that accommodates the liquid ejecting head **50**, and a transport belt **42** to which the carriage **41** is fixed. The number of liquid ejecting heads **50** mounted in the carriage **41** is not limited to one and may be two or more. Moreover, in addition to the liquid ejecting head **50**, the above-described liquid container **10** may be mounted in the carriage **41**.

[0027] The liquid ejecting head **50** ejects the ink supplied from the liquid container **10** onto the medium M in the Z**2** direction from each of a plurality of nozzles under the control of the control unit **20**. The ejection is performed in parallel with the transport of the medium M by the transport mechanism **30** and the reciprocating movement of the liquid ejecting head **50** by the moving mechanism **40**, and thus an image is formed by the ink on a surface of the medium M.

1-2. Overall Configuration of Liquid Ejecting Head

[0028] FIG. **2** is an exploded perspective view of the liquid ejecting head **50** according to the first embodiment. FIG. **3** is a sectional view taken along line III-III in FIG. **2**. As illustrated in FIGS. **2** and **3**, the liquid ejecting head **50** includes a flow path substrate **51**, a pressure chamber substrate **52**, a nozzle plate **53**, a vibration absorber **54**, a vibration plate **55**, a plurality of piezoelectric elements **56**, a sealing plate **57**, a case **58**, and a wiring substrate **59**. The vibration plate **55** and the piezoelectric elements **56** constitute an actuator **1**. In this manner, the liquid ejecting head **50** includes the actuator **1** including the piezoelectric elements **56** and the vibration plate **55**.

[0029] Here, the pressure chamber substrate **52**, the vibration plate **55**, the plurality of piezoelectric elements **56**, the case **58**, and the sealing plate **57** are installed in a region located further in the Z**1** direction than is the flow path substrate **51**. On the other hand, the nozzle plate **53** and the vibration absorber **54** are installed in a region located further in the Z**2** direction than is the flow path substrate **51**. The elements of the liquid ejecting head **50** are generally plate-like members elongated in a direction along the Y axis and are bonded to each other with, for example, an adhesive.

[0030] As illustrated in FIG. **2**, the nozzle plate **53** is a plate-like member provided with a plurality of nozzles N arranged in the direction along the Y axis. Each of the nozzles Nis a through-hole through which the ink passes. In this manner, the nozzle plate **53** has the plurality of nozzles N that ejects the ink. The nozzle plate **53** is manufactured, for example, through processing of a silicon single crystal substrate by a semiconductor manufacturing technique using a processing technique such as dry etching or wet etching. However, other known methods and materials may be appropriately used to manufacture the nozzle plate **53**.

[0031] The flow path substrate **51** is a plate-like member for forming a flow path for the ink. As illustrated in FIGS. **2** and **3**, an opening portion R**1**, a plurality of supply flow paths Ra, and a plurality of communication flow paths Na are provided in the flow path substrate **51**. The opening portion R**1** is an elongated through-hole extending in the direction along the Y axis in plan view in the direction along the Z axis so as to be continuous over the plurality of nozzles N. On the other hand, each of the supply flow paths Ra and the communication flow paths Na is a through-hole provided individually for each of the nozzles N. Each of the plurality of supply flow paths Ra is in communication with the opening portion R**1**. Similarly to the above-described nozzle plate **53**, the flow path substrate **51** is manufactured, for example, through processing of a silicon single crystal substrate by a semiconductor manufacturing technique. However, other known methods and materials may be appropriately used to manufacture the flow path substrate **51**.

[0032] The pressure chamber substrate **52** is a plate-like member in which a plurality of pressure chambers C corresponding to the nozzles N is formed. Each of the pressure chambers C is located between the flow path substrate **51** and the vibration plate **55** and is a space called a cavity for applying pressure to the ink filled in the pressure chamber C. The plurality of pressure chambers C is arranged in the direction along the Y axis. Each of the pressure chambers C is formed from a hole **52***a* that is open to both surfaces of the pressure chamber substrate **52** and has an elongated shape extending in a direction along the X axis. In this manner, the pressure chamber substrate **52** has the plurality of pressure chambers C in communication with the nozzles N. An end of each pressure chamber C in the X**2** direction is in communication with the corresponding supply flow path Ra. On the other hand, an end of each pressure chamber C in the X**1** direction is in communication with the corresponding communication flow path Na. Similarly to the above-described nozzle plate **53**, the pressure chamber substrate **52** is manufactured, for example, through processing of a silicon single crystal substrate by a semiconductor manufacturing technique. However, other known methods and materials may be appropriately used to manufacture the pressure chamber substrate **52**.

[0033] The vibration plate **55** is installed on a surface of the pressure chamber substrate **52** facing in the Z**1** direction. The vibration plate **55** is an elastically deformable plate-like member and is connected to the piezoelectric elements **56**. Details of the vibration plate **55** will be described later with reference to FIG. **5**.

[0034] The piezoelectric elements **56** are disposed on a surface of the vibration plate **55** facing in the Z**1** direction. Each of the piezoelectric elements **56** is a passive element that is deformed by a supplied drive signal and has an elongated shape extending in the direction along the X axis. One piezoelectric element **56** is provided for each pressure chamber, and the plurality of piezoelectric elements **56** is arranged in the direction along the Y axis so as to correspond to the plurality of pressure chambers C. When the vibration plate **55** vibrates along with the deformation of the piezoelectric elements **56**, the pressure in the pressure chambers C fluctuates, which causes the ink to be ejected from the

nozzles N. Details of the piezoelectric elements **56** will be described later with reference to FIGS. **4** to **6**.

[0035] The case **58** is a case for storing the ink to be supplied to the plurality of pressure chambers C and is bonded to a surface of the flow path substrate **51** facing in the Z**1** direction with an adhesive or the like. The case **58** is made of, for example, a resin material and is manufactured by injection molding. The case **58** includes an accommodation portion R**2** and an introduction port IH. The accommodation portion R**2** is a recessed portion having an outer shape corresponding to the opening portion R**1** of the flow path substrate **51**. The introduction port IH is a through-hole in communication with the accommodation portion R**2**. A space formed by the opening portion R**1** and the accommodation portion R**2** functions as a liquid storage chamber R that is a reservoir for storing the ink. The ink from the liquid container **10** is supplied to the liquid storage chamber R through the introduction port IH.

[0036] The vibration absorber **54** is an element that absorbs pressure fluctuations in the liquid storage chamber R. The vibration absorber **54** is, for example, a compliance substrate that is an elastically deformable and flexible sheet member. Here, the vibration absorber **54** is disposed on a surface of the flow path substrate **51** facing in the Z**2** direction to close the opening portion R**1** and the plurality of supply flow paths Ra of the flow path substrate **51** and thus form a bottom surface of the liquid storage chamber R.

[0037] The sealing plate **57** is a structure that protects the plurality of piezoelectric elements **56** and reinforces the mechanical strength of the pressure chamber substrate **52** and the vibration plate **55**. The sealing plate **57** is bonded to a surface of the vibration plate **55** with, for example, an adhesive. The sealing plate **57** includes a recessed portion that accommodates the plurality of piezoelectric elements **56**.

[0038] The wiring substrate **59** is bonded to the surface of the pressure chamber substrate **52** or the vibration plate **55** facing in the Z**1** direction. The wiring substrate **59** is a mounting component on which a plurality of wiring lines is formed to electrically couple the control unit **20** and the liquid ejecting head **50**. The wiring substrate **59** is a flexible wiring substrate such as a flexible printed circuit (FPC) or a flexible flat cable (FFC). A drive circuit **60** for driving the piezoelectric elements **56** is mounted on the wiring substrate **59**. The drive circuit **60** selectively supplies a drive signal for driving each piezoelectric element **56** to each piezoelectric element **56** via the wiring substrate **59**.

1-3. Details of Vibration Plate and Piezoelectric Element

[0039] FIG. **4** is a plan view illustrating an example of the liquid ejecting head **50** according to the first embodiment. FIG. **5** is a sectional view taken along line V-V in FIG. **4**. Hereinafter, the pressure chamber substrate **52**, the piezoelectric element **56**, and the vibration plate **55** will be described in this order with reference to FIGS. **4** and **5**.

[0040] As illustrated in FIGS. **4** and **5**, the hole **52***a* constituting each of the pressure chambers C is provided in the pressure chamber substrate **52**. Accordingly, a wall-shaped partition **52***b* extending in the direction along the X axis is provided between two holes **52***a* adjacent to each other in the pressure chamber substrate **52**. The pressure chamber substrate **52** is manufactured, for example, through processing of a silicon single crystal substrate by a semiconductor manufacturing technique. In FIG. **4**, the shape in plan view of each hole **52***a* formed through anisotropically etching of a silicon single crystal substrate having a plane orientation (**110**) is indicated by a broken line. The shape of the hole **52***a* in plan view is not limited to the example illustrated in FIG. **4** and is selected in any desired way.

[0041] Here, the pressure chamber C is formed after the piezoelectric element **56** is formed. The pressure chamber C is formed through, for example, anisotropically etching of a surface different from the surface on which the piezoelectric element **56** is formed, of both surfaces of the silicon single crystal substrate, after the piezoelectric element **56** is formed. At this time, as an etchant of the anisotropic etching, for example, a potassium hydroxide aqueous solution (KOH) or the like is used. In addition, at this time, when an elastic layer **55***a* is made of silicon oxide, the elastic layer **55***a* functions as a stopping layer for stopping the anisotropic etching. After the pressure chamber C described above is formed, the flow path substrate **51** and the like are bonded to the pressure chamber substrate **52** with an adhesive. After the piezoelectric element **56** is formed, if necessary, the surface opposite to the surface on which the piezoelectric element **56** is formed, of both surfaces of the silicon single crystal substrate, is ground by chemical mechanical polishing (CMP) or the like so that the surface is planarized, or the thickness of the substrate is adjusted.

[0042] As illustrated in FIG. **4**, the piezoelectric element **56** overlaps with the pressure chamber C in plan view. As illustrated in FIG. **5**, the piezoelectric element **56** includes an individual electrode **56***a*, a piezoelectric layer **56***b*, and a common electrode **56***c* in this order. In the present embodiment, the individual electrode **56***a*, the piezoelectric layer **56***b*, and the common electrode **56***c* are stacked in order in the Z**1** direction. That is, the individual electrode **56***a*, the piezoelectric layer **56***b*, and the common electrode **56***c* are stacked in this order in a stacking direction DL, which is a direction from the vibration plate **55** toward the piezoelectric element **56**. As will be described later with reference to FIG. **6**, the piezoelectric element **56** includes a first mixed layer **56***d* and a second mixed layer **56***e* in addition to the individual electrode **56***a*, the piezoelectric layer **56***b*, and the common electrode **56***c*.

[0043] In this manner, since the vibration plate **55**, the individual electrode **56***a*, the piezoelectric layer **56***b*, and the common electrode **56***c* are stacked in order in the stacking direction, the individual electrode **56***a* can be used as a lead diffusion suppression layer. As a result, it is not necessary to provide a lead diffusion suppression layer between the vibration plate **55** and a lower electrode, or even if a lead diffusion suppression layer is provided, the thickness of the lead diffusion suppression layer can be reduced. As in a second embodiment to be described later, a lead diffusion suppression layer **56***f* may be provided between the vibration plate **55** and the lower electrode. Hereinafter, in the present embodiment, the individual electrode **56***a* may be referred to as a "lower electrode", and the common electrode **56***c* may be referred to as an "upper electrode".

[0044] The individual electrode **56***a* is an electrode individually provided for each of the plurality of piezoelectric elements **56**. Specifically, a plurality of the individual electrodes **56***a* extending in the direction along the X axis is arranged in the direction along the Y axis at an interval from each other. A drive signal including a predetermined voltage

pulse is supplied from the control unit **20** to each individual electrode **56***a* of each piezoelectric element **56**.

[0045] The individual electrode **56***a* includes, for example, a layer made of platinum (Pt), a layer made of iridium (Ir), and a layer made of titanium (Ti). That is, the individual electrode **56***a* contains platinum, iridium, and titanium. Here, platinum is an electrode material having excellent conductivity. Therefore, through using of platinum as the constituent material of the individual electrode **56***a*, the resistance of the individual electrode **56***a* can be reduced. In addition, when the piezoelectric layer **56***b* is formed, in the layer made of titanium, island-shaped titanium serves as a crystal nucleus to control the orientation of the piezoelectric layer **56***b*, thereby improving the crystallinity or the orientation of the piezoelectric layer **56***b*. Instead of these layers or in addition to these layers, a layer made of another metal material or a conductive oxide may be provided. In addition, these layers may have a layer in which a plurality of metal materials are mixed or alloyed.

[0046] In this manner, the individual electrode **56***a* is mainly made of an electrode material having excellent conductivity, but contains a small amount of lead. When lead is contained in the individual electrode **56***a* as described above, the Young's modulus of the individual electrode **56***a* can be reduced, and the adhesion between the individual electrode **56***a* and the piezoelectric layer **56***b* can be improved. Hereinafter, the material constituting the individual electrode **56***a* may be referred to as a "second electrode material".

[0047] The individual electrode **56***a* described above is formed by, for example, a known film forming technique such as a sputtering method and a known processing technique using photolithography, etching, and the like after the vibration plate **55** is formed. In addition, the individual electrode **56***a* may contain lead through, for example, introducing of lead by ion implantation or forming of a film of a material containing lead, although not particularly limited thereto. In addition, a thickness of the individual electrode **56***a* is, for example, approximately 100 nm.

[0048] In the example illustrated in FIGS. **4** and **5**, the piezoelectric layer **56***b* has a band shape extending in the direction along the Y axis so as to be continuous over the plurality of piezoelectric elements **56**. In the example illustrated in FIG. **4**, the piezoelectric layer **56***b* includes a through-hole **56***b***1** extending through the piezoelectric layer **56***b* and extending in the direction along the X axis in a region corresponding to a gap between the adjacent pressure chambers C in plan view. As a result, the piezoelectric layer **56***b* is individually provided for each piezoelectric element **56** in the sectional view illustrated in FIG. **5**. The piezoelectric layer **56***b* may be individually provided for each of the plurality of piezoelectric elements **56**.

[0049] The piezoelectric layer **56***b* is made of a piezoelectric material containing lead as a constituent element. The piezoelectric material has a perovskite crystal structure represented by the general composition formula ABO_3 and is, for example, lead zirconate titanate ($Pb(Zr,Ti)O_3$). In addition, the piezoelectric layer **56***b* may contain at least one element of vanadium (V), niobium (Nb), tantalum (Ta), phosphorus (P), arsenic (As), antimony (Sb), and bismuth (Bi) in addition to lead (Pb). Lead contained in the piezoelectric material constituting the piezoelectric layer **56***b* may be an element that does not constitute a part of the perovskite crystal structure.

[0050] The piezoelectric layer **56***b* described above is formed through, for example, uniformly forming of a precursor layer of a piezoelectric body by a sol-gel method after the individual electrode **56***a* is formed, firing and crystallizing of the precursor layer, and then patterning of the precursor layer by etching such as reactive ion etching (RIE) or ion milling. In the present embodiment, the piezoelectric layer **56***b* includes a plurality of layers LA, and the plurality of layers LA is formed through repeating of forming and firing of the above-described precursor.

[0051] The common electrode **56***c* is an electrode provided in common for the plurality of piezoelectric elements **56**. Specifically, the common electrode **56***c* has a band shape extending in the direction along the Y axis so as to be continuous over the plurality of piezoelectric elements **56**. A predetermined constant potential is supplied to the common electrode **56***c*.

[0052] The common electrode **56***c* is made of, for example, iridium (Ir). The constituent material of the common electrode **56***c* is not limited to iridium and may be, for example, a metal material such as titanium (Ti), platinum (Pt), aluminum (Al), nickel (Ni), gold (Au), or copper (Cu), or a conductive oxide such as lanthanum nickel oxide ($LaNiO_3$: LNO) or strontium ruthenium oxide ($SrRuO_3$: SRO). In addition, the common electrode **56***c* may be formed through using of one type of these metal materials alone or may be formed through using of two or more types thereof in combination in the form of a laminate or the like.

[0053] In this manner, the common electrode **56***c* is mainly made of an electrode material having excellent conductivity, but contains a small amount of lead. When lead is contained in the common electrode **56***c* as described above, the Young's modulus of the common electrode **56***c* can be reduced, and the adhesion between the common electrode **56***c* and the piezoelectric layer **56***b* can be improved. Hereinafter, the material constituting the common electrode **56***c* may be referred to as a "first electrode material".

[0054] The common electrodes **56***c* described above is formed by, for example, a known film forming technique such as a sputtering method and a known processing technique using photolithography, etching, and the like after the piezoelectric layer **56***b* is formed. In addition, the common electrode **56***c* may contain lead through, for example, introducing of lead by ion implantation or forming of a film of a material containing lead, although not particularly limited thereto. In addition, a thickness of the common electrode **56***c* is, for example, approximately 150 nm.

[0055] In each of the above-described piezoelectric elements **56**, when a voltage is applied between the individual electrode **56***a* and the common electrode **56***c*, the piezoelectric layer **56***b* deforms by an inverse piezoelectric effect. Here, the vibration plate **55** is connected to the piezoelectric elements **56**, and the vibration plate **55** vibrates in accordance with the deformation of the piezoelectric layer **56***b*.

[0056] As illustrated in FIG. **5**, the vibration plate **55** includes the elastic layer **55***a* and an insulation layer **55***b*, which are stacked in this order in the Z**1** direction. Here, the insulation layer **55***b* is disposed closer to the individual electrodes **56***a* in a thickness direction of the vibration plate **55**.

[0057] The elastic layer **55***a* is a film made of, for example, silicon oxide (SiO_2). The material constituting the elastic layer **55***a* is not limited to SiO_2 and may be, for

example, a material containing one type or two or more types of elements selected from titanium (Ti), silicon (Si), aluminum (Al), tantalum (Ta), chromium (Cr), iridium (Ir), hafnium (Hf), and zirconium (Zr), carbon (C) in any state of a simple substance, an oxide, and a nitride.

[0058] A thickness of the elastic layer **55***a* is determined according to a thickness, a width, and the like of the vibration plate **55** and is not particularly limited, but, for example, the thickness of the elastic layer **55***a* is in a range of 100 nm or more and 3000 nm or less.

[0059] The insulation layer **55***b* is, for example, a film made of zirconium oxide (ZrO_2) and contains zirconium (Zr). Since the insulation layer **55***b* containing zirconium is disposed closer to the individual electrode **56***a* in the thickness direction of the vibration plate **55** as described above, bonding of lead contained in the individual electrode **56***a* to the material constituting the elastic layer **55***a* can be suppressed. The material constituting the insulation layer **55***b* is not limited to ZrO_2 and may be, for example, a material containing one type or two or more types of elements selected from titanium (Ti), aluminum (Al), tantalum (Ta), chromium (Cr), hafnium (Hf), silicon (Si), and zirconium (Zr) in any state of an oxide and a nitride.

[0060] A thickness of the insulation layer **55***b* is determined according to the thickness, the width, and the like of the vibration plate **55** and is not particularly limited, but, for example, the thickness of the insulation layer **55***b* is in a range of 100 nm or more and 2000 nm or less.

[0061] In the example illustrated in FIG. **5**, the elastic layer **55***a* and the insulation layer **55***b* are in contact with each other. Another layer such as an adhesion layer for increasing the adhesion between the elastic layer **55***a* and the insulation layer **55***b* may be interposed therebetween. The material constituting the adhesion layer is, for example, TiO_X, AlO_X, CrO_X, or TiN. A thickness of the adhesion layer is determined according to the thickness, the width, and the like of the vibration plate **55** and is not particularly limited, but, for example, the thickness of the adhesion layer is in a range of 20 nm or more and 2000 nm or less.

[0062] The elastic layer **55***a* and the insulation layer **55***b* described above are formed in this order on a silicon single crystal substrate for forming the pressure chamber substrate **52**. For example, when the elastic layer **55***a* is made of silicon oxide, the elastic layer **55***a* is formed through thermally oxidizing of one surface of the silicon single crystal substrate. For example, when the insulation layer **55***b* is made of zirconium oxide, the insulation layer **55***b* is formed through forming of a zirconium layer on the elastic layer **55***a* by a sputtering method and thermally oxidizing of the zirconium layer.

[0063] The method of forming each of the films constituting the vibration plate **55** is not limited to the above-described example and is selected in any desired way. For example, at least a part of the elastic layer **55***a* may be formed by a chemical vapor deposition (CVD) method or the like. In addition, when the adhesion layer is provided between the elastic layer **55***a* and the insulation layer **55***b*, the adhesion layer is formed through forming of a layer of chromium, titanium, aluminum, or the like on the elastic layer **55***a* by a sputtering method and thermally oxidizing of the layer. In this case, the thermal oxidation for forming the adhesion layer may be performed together with the thermal oxidation for forming the insulation layer **55***b*. In addition, the method for forming the adhesion layer is not limited to a method using thermal oxidation, and for example, a CVD method, an atomic layer deposition (ALD) method, or the like may be used.

[0064] The actuator **1** including the vibration plate **55** and the piezoelectric elements **56** described above has a vibration region PV that vibrates by driving of the piezoelectric elements **56**. The vibration region PV is a part of the actuator **1** and is a portion overlapping with each pressure chamber C in plan view.

[0065] The vibration region PV is divided into an active portion RA and a non-active portion RN. The active portion RA is a part of the actuator **1** and is a portion overlapping with the pressure chamber C, the individual electrode **56***a*, the piezoelectric layer **56***b*, and the common electrode **56***c* when viewed in the direction along the Z axis. The non-active portion RN is a part of the actuator **1** and is a portion overlapping with the pressure chamber C when viewed in the direction along the Z axis and different from the active portion RA.

[0066] In the liquid ejecting head **50** described above, each of the individual electrode **56***a* and the common electrode **56***c* contains lead as described above.

[0067] When lead is contained in each of the individual electrode **56***a* and the common electrode **56***c*, lead has a function of decreasing the Young's modulus of each of the individual electrode **56***a* and the common electrode **56***c* and improving the adhesion between the individual electrode **56***a* and the common electrode **56***c*, and the piezoelectric layer **56***b* as described above, but increases a resistance value of each of the individual electrode **56***a* and the common electrode **56***c*.

[0068] Therefore, the lead content in the individual electrode **56***a* is lower than the lead content in the common electrode **56***c*. In other words, the lead content in the common electrode **56***c* is higher than the lead content in the individual electrode **56***a*. As a result, it is possible to suitably increase the amount of displacement of the vibration plate **55** caused by the piezoelectric elements **56** while peeling or floating of the common electrode **56***c* is suppressed.

[0069] More specifically, since the lead content in the individual electrode **56***a* is lower than the lead content in the common electrode **56***c*, it is possible to suppress an increase in resistance value due to the lead contained in the individual electrode **56***a*. Therefore, an electric field applied to the piezoelectric layer **56***b* can be increased, and as a result, it is possible to obtain an advantage that the amount of displacement of the vibration plate **55** caused by the piezoelectric elements **56** can be easily increased. In addition, since the lead content in the common electrode **56***c* is higher than the lead content in the individual electrode **56***a*, the adhesion between the common electrode **56***c* and the piezoelectric layer **56***b* can be improved. Therefore, it is possible to suppress peeling, floating, or the like of the common electrode **56***c*. In addition, since the lead content in the common electrode **56***c* is higher than the lead content in the individual electrode **56***a*, the Young's modulus of the common electrode **56***c* can be reduced, as a result which it is possible to obtain an advantage that the amount of displacement of the vibration plate **55** caused by the piezoelectric elements **56** can be easily increased.

[0070] When the lead content in the individual electrode **56***a* is α[atm %] and the lead content in the common electrode **56***c* is β [atm %], α/β corresponds to BE**1**/TE or BE**2**/TE, which is a peak intensity ratio described later.

From the viewpoint of suitably obtaining the above-described effect obtained through making of the lead content in the individual electrode **56***a* lower than the lead content in the common electrode **56***c*, BE**1**/TE is preferably 0.026 or more and 0.138 or less, and more preferably 0.026 or more and 0.130 or less. From the same viewpoint, BE**2**/TE is preferably 0.0205 or more and 0.0787 or less, and more preferably 0.0205 or more and 0.0623 or less.

[0071] Peak values BE**1**, BE**2**, and TE are measured by energy dispersive X-ray spectrometry (EDS) or secondary ion mass spectrometry (SIMS). Here, BE**1**/TE and BE**2**/TE are calculated by comparison of the peak values indicating lead in the individual electrode **56***a* and the common electrode **56***c*. When the individual electrode **56***a* or the common electrode **56***c* does not indicate a peak, a portion of the individual electrode **56***a* or the common electrode **56***c* indicating a broad shoulder is treated as a peak. In addition, when the individual electrode **56***a* or the common electrode **56***c* indicates both a peak and a shoulder, one of the peak and the shoulder is treated as a peak.

[0072] In addition, when the lead content in each of the piezoelectric layer **56***b* and the common electrode **56***c* is measured by energy dispersive X-ray spectrometry, the peak value indicating lead in the common electrode **56***c* is preferably larger than the peak value indicating lead in the piezoelectric layer **56***b*. Accordingly, the adhesion between the common electrode **56***c* and the piezoelectric layer **56***b* can be suitably increased. In addition, since a lead defect of the piezoelectric layer **56***b* due to the movement of lead to the common electrode **56***c* is unlikely to occur, there is also an advantage that the performance of the piezoelectric elements **56** is easily improved.

[0073] FIG. **6** is an enlarged view of a portion VI in FIG. **5**. As illustrated in FIG. **6**, the piezoelectric layer **56***b* includes a plurality of layers LA-**1** to LA-**5** made of a piezoelectric material. Hereinafter, each of the layers LA-**1** to LA-**5** may be referred to as a layer LA without being distinguished. The number of layers LA constituting the piezoelectric layer **56***b* is not limited to the example illustrated in FIG. **6** and may be four or less or six or more. In addition, a thickness of the plurality of layers LA may be equal to or different from each other. In FIG. **6**, for convenience of description, an interface between two layers adjacent to each other is clearly illustrated, but the interface does not have to be clear due to an inclined material configuration or the like.

[0074] When the piezoelectric layer **56***b* includes the plurality of layers LA as described above, the concentration of lead may be different in the plurality of layers LA when the piezoelectric layer **56***b* is formed by film formation. As a result, excessive lead may remain in the uppermost layer LA-**5** among the plurality of layers LA of the piezoelectric layer **56***b*, and lead may be released to the outside. According to this configuration, since the common electrode **56***c*, which is the upper electrode having a high lead content, covers the piezoelectric layer **56***b*, it is possible to suppress the release of lead from the piezoelectric layer **56***b* to the outside at the time of firing in consideration of the balance between the piezoelectric layer **56***b* and the common electrode **56***c*.

[0075] As illustrated in FIG. **6**, each piezoelectric element **56** includes the first mixed layer **56***d* and the second mixed layer **56***e* in addition to the individual electrode **56***a*, the piezoelectric layer **56***b*, and the common electrode **56***c* described above.

[0076] The first mixed layer **56***d* is disposed between the common electrode **56***c* and the piezoelectric layer **56***b* and is made of a material in which the first electrode material constituting the common electrode **56***c* and lead are mixed or alloyed. Through providing of the first mixed layer **56***d* described above, it is possible to improve the adhesion between the common electrode **56***c* and the piezoelectric layer **56***b*. As a result, the effect obtained through making of the lead content in the common electrode **56***c* higher than the lead content in the individual electrode **56***a* can be remarkably obtained.

[0077] It is preferable that the first mixed layer **56***d* includes a first adhesion material that assists adhesion between the common electrode **56***c* and the piezoelectric layer **56***b*, and the first adhesion material, the first electrode material, and lead are mixed or alloyed. Accordingly, the adhesion between the common electrode **56***c* and the piezoelectric layer **56***b* can be improved.

[0078] Examples of the first adhesion material include metals such as Ti and Ir, and metal oxides such as TiO_X, ZnO_X, AlO_X, ZrO_X, HfO_X, TaO_X, IrO_X, RuO_X, VO_X, $SrRuO_X$, $SrTaO_X$, $LaTaO_X$, and $(LaSr)CoO_X$.

[0079] The first adhesion material preferably contains titanium oxide (TiO_X) as a constituent element. Accordingly, through increasing of the oxygen concentration in the first mixed layer **56***d*, a redox reaction in the first mixed layer **56***d* can be suppressed. As a result, oxygen release from the piezoelectric layer **56***b* can be suppressed. Specifically, according to the Ellingham diagram, when Pb and Ti are compared, PbO is easily reduced to Pb, and Ti is easily oxidized to TiO_X. Therefore, when the titanium concentration in the first mixed layer **56***d* is high, since the redox reaction can be suppressed, it is possible to suppress the release of oxygen from the piezoelectric layer **56***b* and the reduction of lead zirconate titanate.

[0080] A thickness t**1** of the first mixed layer **56***d* is preferably thicker than a thickness t**2** of the second mixed layer **56***e*. Accordingly, the adhesion between the common electrode **56***c* and the piezoelectric layer **56***b* can be suitably increased.

[0081] The specific thickness t**1** of the first mixed layer **56***d* is not particularly limited, but is, for example, in a range of 20 nm or more and 80 nm or less. The first mixed layer **56***d* is provided as necessary and may be omitted.

[0082] The second mixed layer **56***e* is disposed between the individual electrode **56***a* and the piezoelectric layer **56***b* and is made of a material in which the second electrode material constituting the individual electrode **56***a* and lead are mixed or alloyed. Through providing of the second mixed layer **56***e* described above, it is possible to improve the adhesion between the individual electrode **56***a* and the piezoelectric layer **56***b*.

[0083] It is preferable that the second mixed layer **56***e* includes a second adhesion material that assists adhesion between the individual electrode **56***a* and the piezoelectric layer **56***b*, and the second adhesion material, the second electrode material, and lead are mixed or alloyed. Accordingly, the adhesion between the individual electrode **56***a* and the piezoelectric layer **56***b* can be improved.

[0084] Similarly to the first adhesion material, examples of the second adhesion material include metals such as Ti

and Ir, and metal oxides such as TiO_X, ZnO_X, AlO_X, ZrO_X, HfO_X, TaO_X, IrO_X, RuO_X, VO_X, $SrRuO_X$, $SrTaO_X$, $LaTaO_X$, and $(LaSr)CoO_X$.

[0085] The second adhesion material preferably contains titanium oxide (TiO_X) as a constituent element. Accordingly, through increasing of the oxygen concentration in the second mixed layer **56***e*, a redox reaction in the second mixed layer **56***e* can be suppressed. As a result, oxygen release from the piezoelectric layer **56***b* can be suppressed.

[0086] The specific thickness t**2** of the second mixed layer **56***e* is not particularly limited, but is, for example, in a range of 10 nm or more and 70 nm or less. The second mixed layer **56***e* is provided as necessary and may be omitted.

[0087] FIG. **7** is a table illustrating a relationship between measurement results of lead contained in the common electrodes **56***c* and the individual electrodes **56***a* of samples No. 1 to No. 5 and evaluation of the liquid ejecting head **50**. FIG. **8** is a graph illustrating results of measurement of lead contained in the common electrodes **56***c* and the individual electrodes **56***a* of samples No. 1 to No. 5 by SIMS.

[0088] FIG. **8** illustrates the results of measurement of lead by secondary ion mass spectrometry (SIMS) for samples No. 1 to No. 5 each having a stacked structure of the vibration plate **55** and the piezoelectric element **56** of the present embodiment. FIG. **7** illustrates the peak values TE, BE**1**, and BE**2** and the ratios BE**1**/TE and BE**2**/TE based on the results illustrated in FIG. **8**, and the results of evaluation of the adhesion and the amount of displacement of the liquid ejecting head **50** for samples No. 1 to No. 5. The peak value TE in FIG. **8** is a value indicating a peak of lead in the common electrode **56***c* as the upper electrode. The peak value BE**1** in FIG. **8** is a value indicating a higher value of two peaks or shoulders of lead in the individual electrode **56***a* as the lower electrode. The peak value BE**2** in FIG. **8** is a value indicating a lower value of two peaks or shoulders of lead in the individual electrode **56***a* as the lower electrode. FIG. **8** illustrates TE, BE**1**, and BE**2** of sample No. 1.

[0089] The measurement by the secondary ion mass spectrometry was performed using a measuring device (IMS-7*f* manufactured by CAMECA) after test pieces were prepared through cutting of samples No. 1 to No. 5 into small pieces of 2 cm×2 cm, and the test pieces were exposed to high temperature and high humidity of a heavy water atmosphere (45° C. and 95%, or an atmosphere having a larger amount of water vapor) for 24 hours.

[0090] Regarding the evaluation of the adhesion in FIG. **7**, A indicates that the adhesion between both of the common electrode **56***c* and the individual electrode **56***a*, and the piezoelectric layer **56***b* is excellent, and B indicates that the adhesion between both of the common electrode **56***c* and the individual electrode **56***a*, and the piezoelectric layer **56***b* is good although the adhesion is inferior to A. As illustrated in FIG. **7**, in samples No. 1 to No. 3, and No. 5, good results are obtained in the evaluation of the adhesion as compared with sample No 4.

[0091] Regarding the evaluation of the amount of displacement in FIG. **7**, A indicates that the effect of increasing the amount of displacement of the piezoelectric element **56** is particularly high, and B indicates that the effect of increasing the amount of displacement of the piezoelectric elements **56** is recognized although the effect is inferior to A. As illustrated in FIG. **7**, in samples No. 1 to No. 3, and No. 5, good results are obtained in the evaluation of the amount of displacement as compared with sample No 4.

[0092] Regarding the overall evaluation in FIG. **7**, A indicates that the evaluation of both the adhesion and the amount of displacement is A, and B indicates that the evaluation of only one of the adhesion and the amount of displacement is A. As illustrated in FIG. **7**, in samples No. 1 to No. 3, and No. 5, good results are obtained in the overall evaluation as compared with sample No 4.

[0093] As is understood from the above description, through making of the lead content in the individual electrode **56***a* lower than the lead content in the common electrode **56***c*, it is possible to suitably increase the amount of displacement of the vibration plate **55** caused by the piezoelectric element **56** while suppressing peeling, floating, or the like of the common electrode **56***c*.

2. Second Embodiment

[0094] Hereinafter, a second embodiment of the present disclosure will be described. In the embodiment, which will be exemplified below, elements having operations and functions similar to those in the first embodiment are denoted by the same reference signs as those used in the description of the first embodiment, and detailed description thereof will be appropriately omitted.

[0095] FIG. **9** is a sectional view of a liquid ejecting head **50**A according to the second embodiment. FIG. **10** is an enlarged view of a portion X in FIG. **9**. The liquid ejecting head **50**A is configured in the same manner as the liquid ejecting head **50** of the first embodiment except that the liquid ejecting head **50**A includes a piezoelectric element **56**A instead of the piezoelectric element **56** of the first embodiment.

[0096] As illustrated in FIGS. **9** and **10**, the piezoelectric element **56**A is configured in the same manner as the piezoelectric element **56** of the first embodiment except that the stacking order is opposite to that of the piezoelectric element **56** of the first embodiment, and a lead diffusion suppression layer **56***f* is added. The lead diffusion suppression layer **56***f* may be regarded as a component of the vibration plate **55** instead of a component of the piezoelectric element **56**A, or may be regarded as a component separate from the piezoelectric element **56**A and the vibration plate **55**. In FIG. **9**, for convenience of description, the first mixed layer **56***d*, the second mixed layer **56***e*, and the lead diffusion suppression layer **56***f* are not illustrated.

[0097] As illustrated in FIG. **10**, in the present embodiment, the vibration plate **55**, the common electrode **56***c*, the piezoelectric layer **56***b*, and the individual electrode **56***a* are stacked in order in the stacking direction DL. Here, the first mixed layer **56***d* is disposed between the common electrode **56***c* and the piezoelectric layer **56***b*. The second mixed layer **56***e* is disposed between the individual electrode **56***a* and the piezoelectric layer **56***b*.

[0098] Hereinafter, in the present embodiment, the common electrode **56***c* may be referred to as a "lower electrode", and the individual electrode **56***a* may be referred to as an "upper electrode".

[0099] The piezoelectric element **56**A includes the lead diffusion suppression layer **56***f*. The lead diffusion suppression layer **56***f* is disposed between the common electrode **56***c* and the vibration plate **55**. Through providing of the lead diffusion suppression layer **56***f* described above, penetration of lead into the vibration plate **55** can be suppressed. In addition, through using of the individual electrode **56***a*, which is superior in ductility to the common electrode **56***c*

by its metal purity, as the upper electrode, the piezoelectric element **56**A can be easily deformed.

[0100] The lead diffusion suppression layer **56***f* includes, for example, an oxide or a nitride of at least one element of zirconium (Zr), strontium (Sr), ruthenium (Ru), bismuth (Bi), iron (Fe), titanium (Ti), chromium (Cr), hafnium (Hf), iridium (Ir), rhodium (Rh), osmium (Os), and silicon (Si). Accordingly, penetration of lead from the lower electrode into the vibration plate **55** can be suppressed.

[0101] The lead diffusion suppression layer **56***f* preferably contains one or both of zirconium and silicon. Accordingly, there is an advantage that the adhesion between the common electrode **56***c* and the vibration plate **55** is easily increased.

[0102] FIG. **11** is a table illustrating measurement results of lead contained in the common electrodes **56***c* and the individual electrodes **56***a* of samples No. 6 and No. 7. FIG. **12** is a graph illustrating results of measurement of lead contained in the common electrode **56***c* and the individual electrode **56***a* of sample No. 6 by EDS. FIG. **13** is a graph illustrating results of measurement of lead contained in the common electrode **56***c* and the individual electrode **56***a* of sample No. 7 by EDS.

[0103] FIGS. **12** and **13** illustrate the results of measurement of lead by energy dispersive X-ray spectrometry (EDS) for samples No. 6 and No. 7 each having a stacked structure of the vibration plate **55** and the piezoelectric element **56**A of the present embodiment. In FIG. **11**, peak values TE and BE and a ratio BE/TE based on the results illustrated in FIGS. **12** and **13** are illustrated for samples No. 6 and No. 7. The peak value TE in FIG. **11** is a value indicating a peak of lead in the individual electrode **56***a* as the upper electrode. The peak value BE is a value indicating a peak or a shoulder of lead in the common electrode **56***c* as the lower electrode.

[0104] Although not illustrated, the same evaluation results as those of No. 1 to No. 5 of the first embodiment were obtained for both No. 6 and No. 7. Therefore, in the liquid ejecting head **50**A, the ratio BE/TE is preferably 0.080 or more and 0.39 or less.

[0105] In the second embodiment described above as well, similarly to the first embodiment, the lead content in the individual electrode **56***a* is lower than the lead content in the common electrode **56***c*. In other words, the lead content in the common electrode **56***c* is higher than the lead content in the individual electrode **56***a*. Therefore, it is possible to increase the amount of displacement of the vibration plate **55** caused by the piezoelectric element **56**A while improving the reliability.

3. Modifications

[0106] The embodiments exemplified above can be modified in various ways. Specific modification aspects that can be applied to the above-described embodiments will be exemplified below. Two or more aspects freely selected from the following examples can be appropriately combined within a range in which the two or more aspects do not contradict each other.

3-1. Modification 1

[0107] In each of the above-described embodiments, the piezoelectric layer **56***b* is provided in common for the plurality of pressure chambers C, but the present disclosure is not limited thereto, and the piezoelectric layer **56***b* may be divided for each pressure chamber C.

3-2. Modification 2

[0108] Each of the above-described embodiments describes the serial-type liquid ejecting apparatus **100** in which the carriage **41** having the liquid ejecting head **50** mounted therein is reciprocated, but the present disclosure may also be applied to a line-type liquid ejecting apparatus in which the plurality of nozzles N is distributed over the entire width of the medium M.

3-3. Modification 3

[0109] The liquid ejecting apparatus **100** described in each of the above-described embodiments may be employed in various apparatuses such as facsimile machines and copying machines in addition to apparatuses dedicated to printing. Moreover, the application of the liquid ejecting apparatus of the present disclosure is not limited to printing. For example, a liquid ejecting apparatus that ejects a solution of a coloring material is used as a manufacturing device that forms color filters of a liquid crystal display device. In addition, a liquid ejecting apparatus that ejects a solution of a conductive material is used as a manufacturing device that forms wiring lines or electrodes of a wiring substrate.

4. Summary of Present Disclosure

[0110] A summary of the present disclosure is added below.

Supplementary Note 1

[0111] According to a first aspect of the present disclosure, there is provided a liquid ejecting head including a piezoelectric element including an individual electrode, a piezoelectric layer, and a common electrode, and a vibration plate connected to the piezoelectric element, in which the individual electrode is individually provided for each of a plurality of piezoelectric elements, the common electrode is provided in common for the plurality of piezoelectric elements, the piezoelectric layer is made of a piezoelectric material containing lead as a constituent element, each of the individual electrode and the common electrode contains lead, and a lead content in the individual electrode is lower than a lead content in the common electrode.

[0112] In the above aspect, since the lead content in the individual electrode is lower than the lead content in the common electrode, it is possible to suppress an increase in resistance value due to the lead contained in the individual electrode. Therefore, an electric field applied to the piezoelectric layer can be increased, and as a result, it is possible to obtain an advantage that the amount of displacement of the vibration plate caused by the piezoelectric element can be easily increased. In addition, since the lead content in the common electrode is higher than the lead content in the individual electrode, the adhesion between the common electrode and the piezoelectric layer can be improved. Therefore, it is possible to suppress peeling, floating, or the like of the common electrode. In addition, since the lead content in the common electrode is higher than the lead content in the individual electrode, the Young's modulus of the common electrode can be reduced, as a result which it is possible to obtain an advantage that the amount of displacement of the vibration plate caused by the piezoelectric element can be easily increased.

[0113] When lead is contained in each of the individual electrode and the common electrode, lead has a function of decreasing the Young's modulus of each of the individual electrode and the common electrode and improving the adhesion between the individual electrode and the common electrode, and the piezoelectric layer, but increases a resistance value of each of the individual electrode and the common electrode. Therefore, as described above, through making of the lead content in the individual electrode lower than the lead content in the common electrode, it is possible to suitably increase the amount of displacement of the vibration plate caused by the piezoelectric element while suppressing peeling, floating, or the like of the common electrode.

Supplementary Note 2

[0114] In a second aspect that is a preferred example of the first aspect, the liquid ejecting head further includes a first mixed layer that is disposed between the common electrode and the piezoelectric layer and in which a first electrode material constituting the common electrode and lead are mixed or alloyed. In the above aspect, it is possible to improve the adhesion between the common electrode and the piezoelectric layer. As a result, the effect obtained through making of the lead content in the common electrode higher than the lead content in the individual electrode can be remarkably obtained.

Supplementary Note 3

[0115] In a third aspect that is a preferred example of the second aspect, the first mixed layer includes a first adhesion material that assists adhesion between the common electrode and the piezoelectric layer, and the first adhesion material, the first electrode material, and lead are mixed or alloyed. In the above aspect, it is possible to improve the adhesion between the common electrode and the piezoelectric layer.

Supplementary Note 4

[0116] In a fourth aspect that is a preferred example of the third aspect, the first adhesion material contains titanium oxide as a constituent element. In the above aspect, through increasing of the oxygen concentration in the first mixed layer, a redox reaction in the first mixed layer can be suppressed. As a result, oxygen release from the piezoelectric layer can be suppressed.

Supplementary Note 5

[0117] In a fifth aspect that is a preferred example of any one of the first to fourth aspects, the liquid ejecting head further includes a second mixed layer that is disposed between the individual electrode and the piezoelectric layer and in which a second electrode material constituting the individual electrode and lead are mixed or alloyed. In the above aspect, it is possible to improve the adhesion between the individual electrode and the piezoelectric layer.

Supplementary Note 6

[0118] In a sixth aspect that is a preferred example of the fifth aspect, a thickness of the first mixed layer is thicker than a thickness of the second mixed layer. In the above aspect, it is possible to suitably increase the adhesion between the common electrode and the piezoelectric layer.

Supplementary Note 7

[0119] In a seventh aspect that is a preferred example of any one of the first to sixth aspects, when lead in each of the piezoelectric layer and the common electrode is measured by energy dispersive X-ray spectrometry, a peak value indicating lead in the common electrode is larger than a peak value indicating lead in the piezoelectric layer. In the above aspect, it is possible to suitably increase the adhesion between the common electrode and the piezoelectric layer. In addition, since a lead defect of the piezoelectric layer due to the movement of lead to the common electrode is unlikely to occur, there is also an advantage that the performance of the piezoelectric element is easily improved.

Supplementary Note 8

[0120] In an eighth aspect that is a preferred example of any one of the first to sixth aspects, the liquid ejecting head further includes a lead diffusion suppression layer disposed between the common electrode and the vibration plate, and the vibration plate, the common electrode, the piezoelectric layer, and the individual electrode are stacked in order in a stacking direction. In the above aspect, penetration of lead into the vibration plate can be suppressed. In addition, since the purity of the metal material constituting the electrode is increased, the individual electrode, which is superior in ductility to the common electrode, is used as the upper electrode, and thus the piezoelectric element can be easily deformed.

Supplementary Note 9

[0121] In a ninth aspect that is a preferred example of the eighth aspect, the lead diffusion suppression layer contains one or both of zirconium and silicon. In the above aspect, there is an advantage that the adhesion between the common electrode and the vibration plate is easily increased.

Supplementary Note 10

[0122] In a tenth aspect that is a preferred example of any one of the first to sixth aspects, the vibration plate, the individual electrode, the piezoelectric layer, and the common electrode are stacked in order in a stacking direction, and the piezoelectric layer includes a plurality of layers made of the piezoelectric material. In the above aspect, when the piezoelectric layer includes a plurality of layers, since the upper electrode having a high lead content covers the piezoelectric layer, it is possible to suppress the release of lead from the piezoelectric layer to the outside at the time of firing in consideration of the balance between the piezoelectric layer and the upper electrode.

Supplementary Note 11

[0123] In an eleventh aspect that is a preferred example of any one of the first to fourth aspects, the vibration plate, the individual electrode, the piezoelectric layer, and the common electrode are stacked in order in a stacking direction. In the above aspect, the individual electrode can be used as the lead diffusion suppression layer. As a result, it is not necessary to provide the lead diffusion suppression layer between the vibration plate and the lower electrode, or even if the lead diffusion suppression layer is provided, the thickness of the lead diffusion suppression layer can be reduced.

What is claimed is:

1. A liquid ejecting head comprising:

a piezoelectric element including an individual electrode, a piezoelectric layer, and a common electrode; and

a vibration plate, wherein

the individual electrode is individually provided for each of a plurality of piezoelectric elements,

the common electrode is provided in common for the plurality of piezoelectric elements,

the piezoelectric layer is made of a piezoelectric material containing lead as a constituent element,

each of the individual electrode and the common electrode contains lead, and

a lead content in the individual electrode is lower than a lead content in the common electrode.

2. The liquid ejecting head according to claim **1**, further comprising

a first mixed layer that is disposed between the common electrode and the piezoelectric layer and in which a first electrode material constituting the common electrode and lead are mixed or alloyed.

3. The liquid ejecting head according to claim **2**, wherein

the first mixed layer includes a first adhesion material that assists adhesion between the common electrode and the piezoelectric layer, and

the first adhesion material, the first electrode material, and lead are mixed or alloyed.

4. The liquid ejecting head according to claim **3**, wherein

the first adhesion material contains titanium oxide as a constituent element.

5. The liquid ejecting head according to claim **2**, further comprising

a second mixed layer that is disposed between the individual electrode and the piezoelectric layer and in which a second electrode material constituting the individual electrode and lead are mixed or alloyed.

6. The liquid ejecting head according to claim **5**, wherein

a thickness of the first mixed layer is thicker than a thickness of the second mixed layer.

7. The liquid ejecting head according to claim **1**, wherein

when lead in each of the piezoelectric layer and the common electrode is measured by energy dispersive X-ray spectrometry, a peak value indicating lead in the common electrode is larger than a peak value indicating lead in the piezoelectric layer.

8. The liquid ejecting head according to claim **6**, wherein

when lead in each of the piezoelectric layer and the common electrode is measured by energy dispersive X-ray spectrometry, a peak value indicating lead in the common electrode is larger than a peak value indicating lead in the piezoelectric layer.

9. The liquid ejecting head according to claim **1**, further comprising

a lead diffusion suppression layer disposed between the common electrode and the vibration plate, wherein

the vibration plate, the common electrode, the piezoelectric layer, and the individual electrode are stacked in order in a stacking direction.

10. The liquid ejecting head according to claim **9**, wherein

the lead diffusion suppression layer contains one or both of zirconium and silicon.

11. The liquid ejecting head according to claim **1**, wherein

the vibration plate, the individual electrode, the piezoelectric layer, and the common electrode are stacked in order in a stacking direction, and

the piezoelectric layer includes a plurality of layers made of the piezoelectric material.

12. The liquid ejecting head according to claim **7**, wherein

the vibration plate, the individual electrode, the piezoelectric layer, and the common electrode are stacked in order in a stacking direction, and

the piezoelectric layer includes a plurality of layers made of the piezoelectric material.

13. The liquid ejecting head according to claim **1**, wherein

the vibration plate, the individual electrode, the piezoelectric layer, and the common electrode are stacked in order in a stacking direction.

14. The liquid ejecting head according to claim **7**, wherein

the vibration plate, the individual electrode, the piezoelectric layer, and the common electrode are stacked in order in a stacking direction, and

the piezoelectric layer includes a plurality of layers made of the piezoelectric material.

15. A liquid ejecting head comprising:

a first piezoelectric element which includes a first individual electrode, a first piezoelectric layer and a common electrode;

a second piezoelectric element which includes a second individual electrode, a second piezoelectric layer and the common electrode; and

a vibration plate, wherein

the first piezoelectric layer is made of a piezoelectric material containing lead as a constituent element,

each of the first individual electrode and the common electrode contains lead, and

a lead content in the first individual electrode is lower than a lead content in the common electrode.

* * * * *