US 20250282449A1

(19) United States

(12) Patent Application Publication

Yang

(10) Pub. No.: US 2025/0282449 A1

(43) Pub. Date: Sep. 11, 2025

(54) **PORTABLE AND INFLATABLE BOAT WITH SELF-SECURE AND STORAGE ARRANGEMENT**

(71) Applicant: **Ming Yang**, Calgary (CA)

(72) Inventor: **Ming Yang**, Calgary (CA)

(21) Appl. No.: **18/600,657**

(22) Filed: **Mar. 9, 2024**

Publication Classification

(51) **Int. Cl.**

B63B 7/08 (2020.01)

B63B 7/00 (2020.01)

(52) **U.S. Cl.**

CPC ***B63B 7/082*** (2013.01); ***B63B 7/085*** (2013.01); *B63B 2007/006* (2013.01)

(57) **ABSTRACT**

A portable and inflatable boat with self-secure and storage arrangement includes a hard shell body and an inflatable floating platform. The hard shell body includes a container unit, made of rigid material, having a concave engaging surface extended between an upper surface and a lower surface to define a concave engagement groove. The inflatable floating platform includes an inflatable floating body which has a circular outer side and a U-shape inner side which defines a U-shape mounting slot forming a convex engagement ridge along the U-shape mounting slot. After inflation, the U-shape mounting slot is configured to fittingly receive the hard shell body therein and the convex engagement ridge presses against the concave engaging surface so as to engage the hard shell body with the inflated inflatable floating body securely.

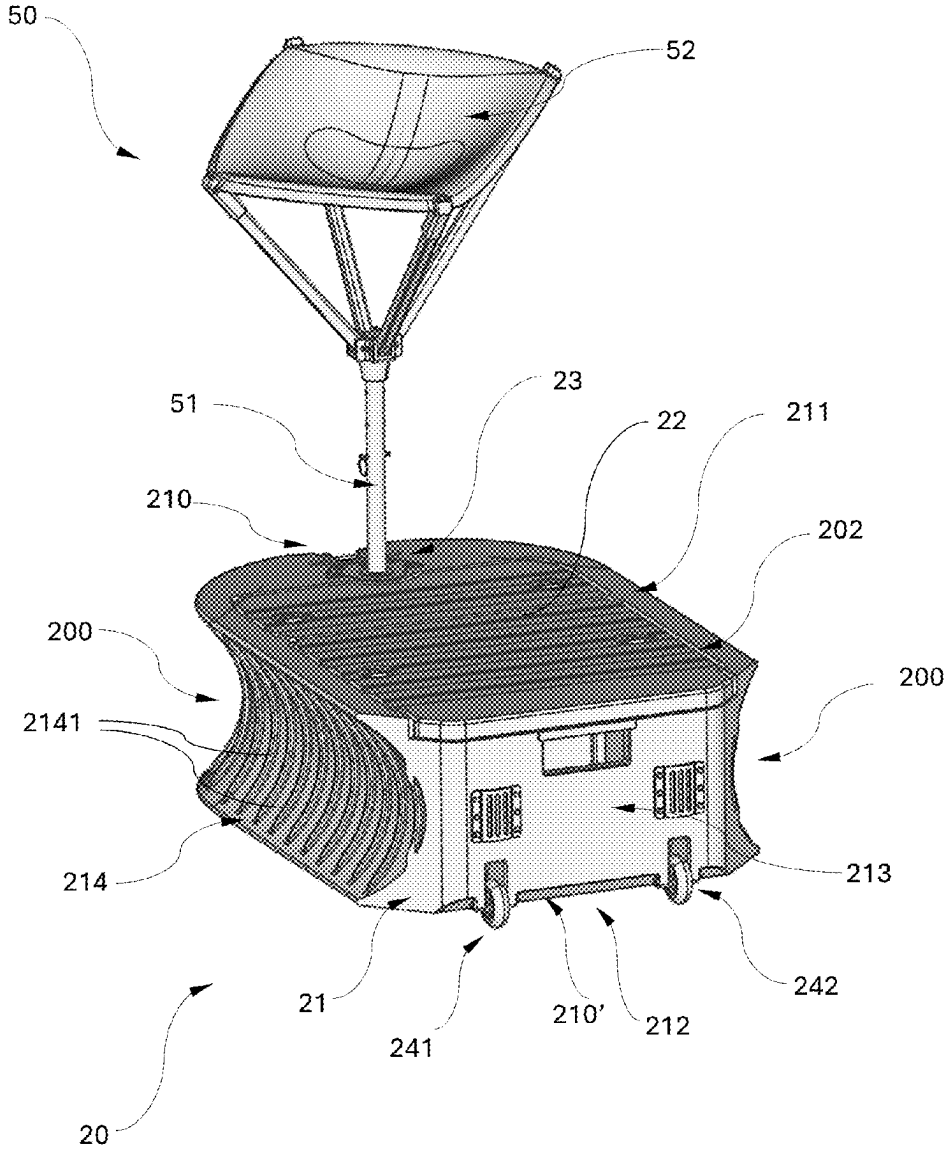

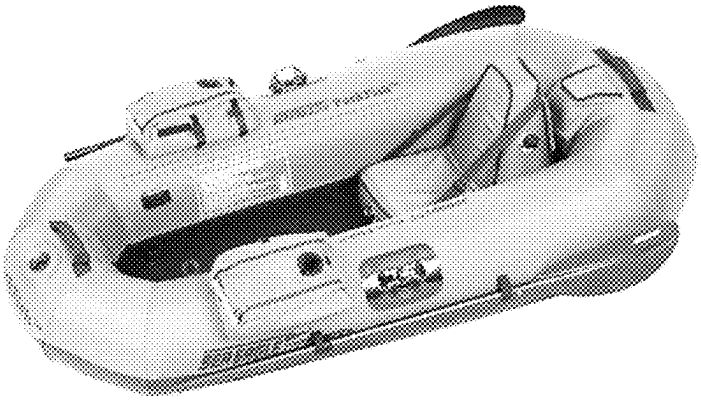

FIG. 1
PRIOR ART

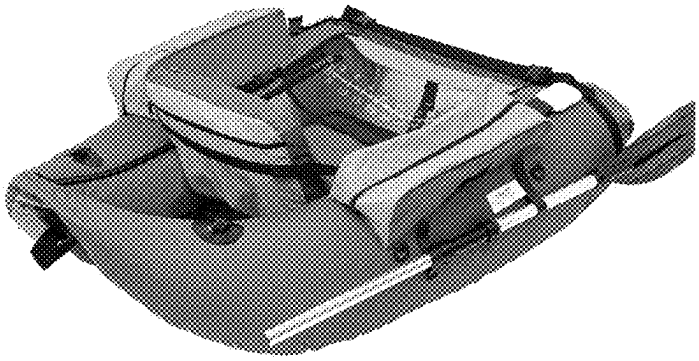

FIG. 2
PRIOR ART

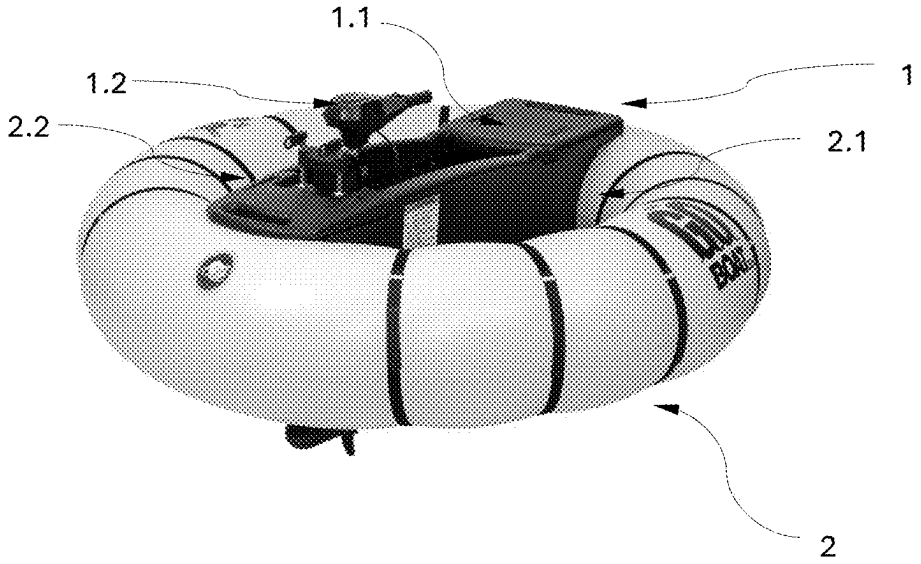

FIG. 3
PRIOR ART

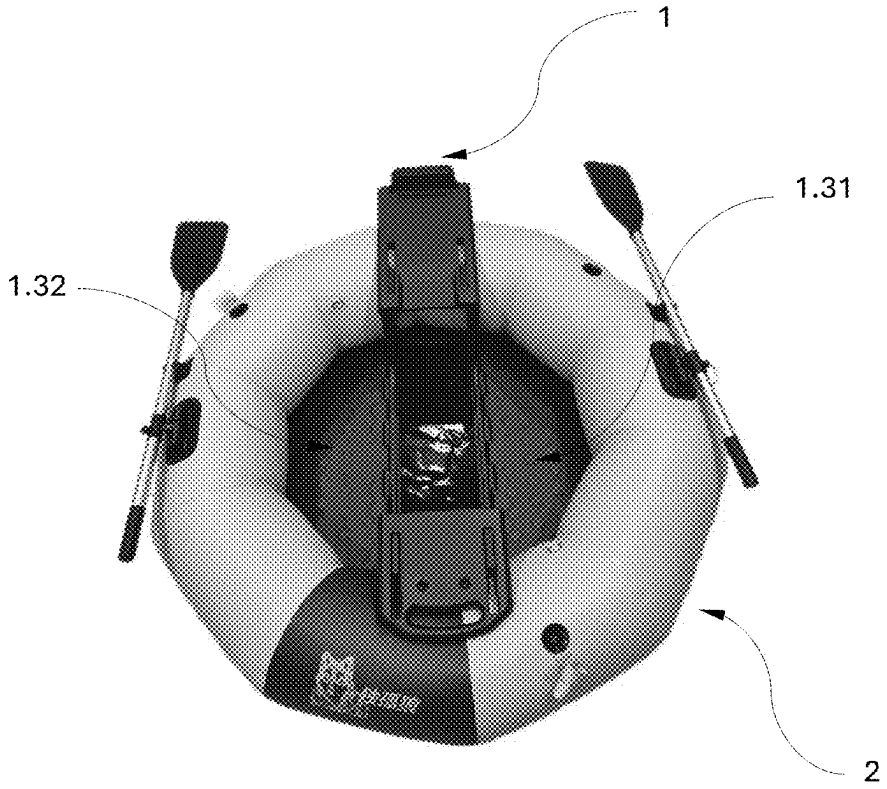

FIG. 4
PRIOR ART

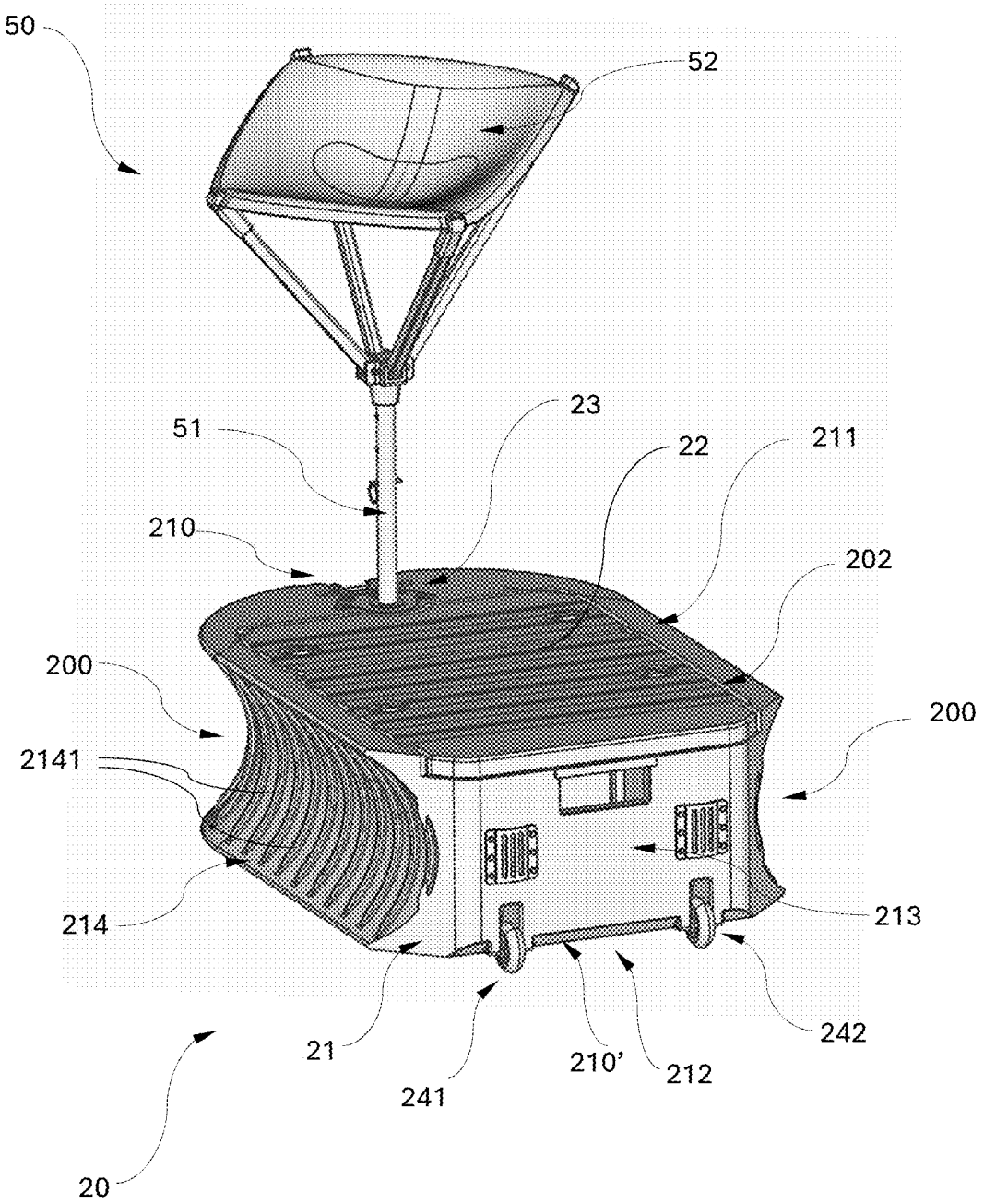
50
52
51
23
22
211
210
202
200
200
2141
214
213
21
241
210'
212
242
20

FIG. 5

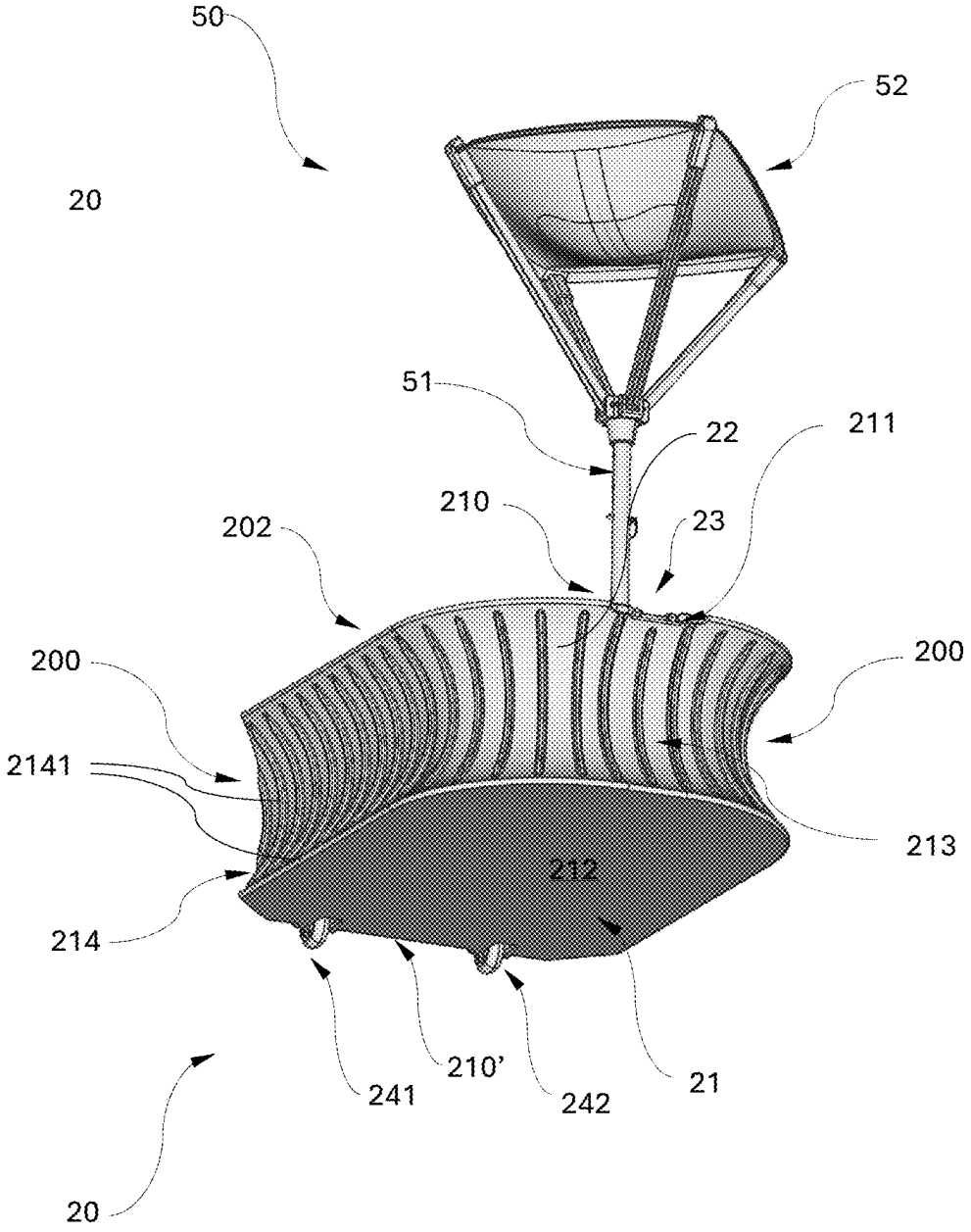
50
52
20
51
22
211
210
23
202
200
200
2141
213
212
214
241
210'
242
21
20

FIG. 6

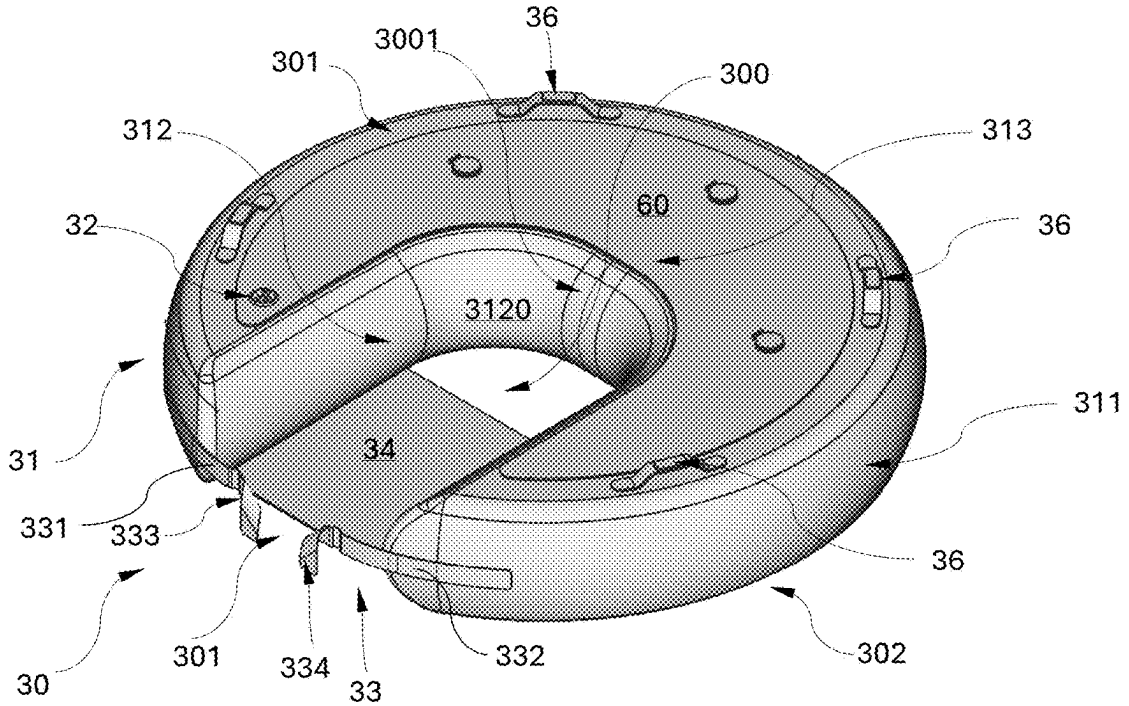
36
3001
301
300
312
313
60
32
36
3120
31
311
34
331
333
36
30
301
334
33
332
302

FIG. 7

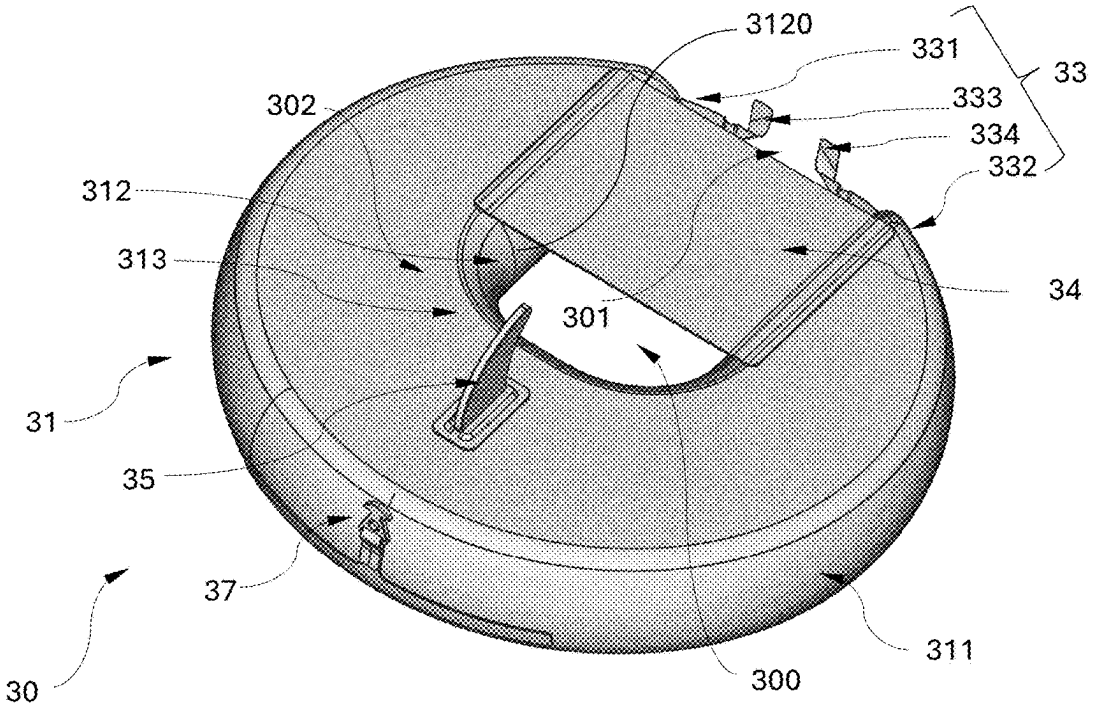
3120
331
33
302
333
334
332
312
313
34
301
31
35
37
30
311
300

FIG. 8

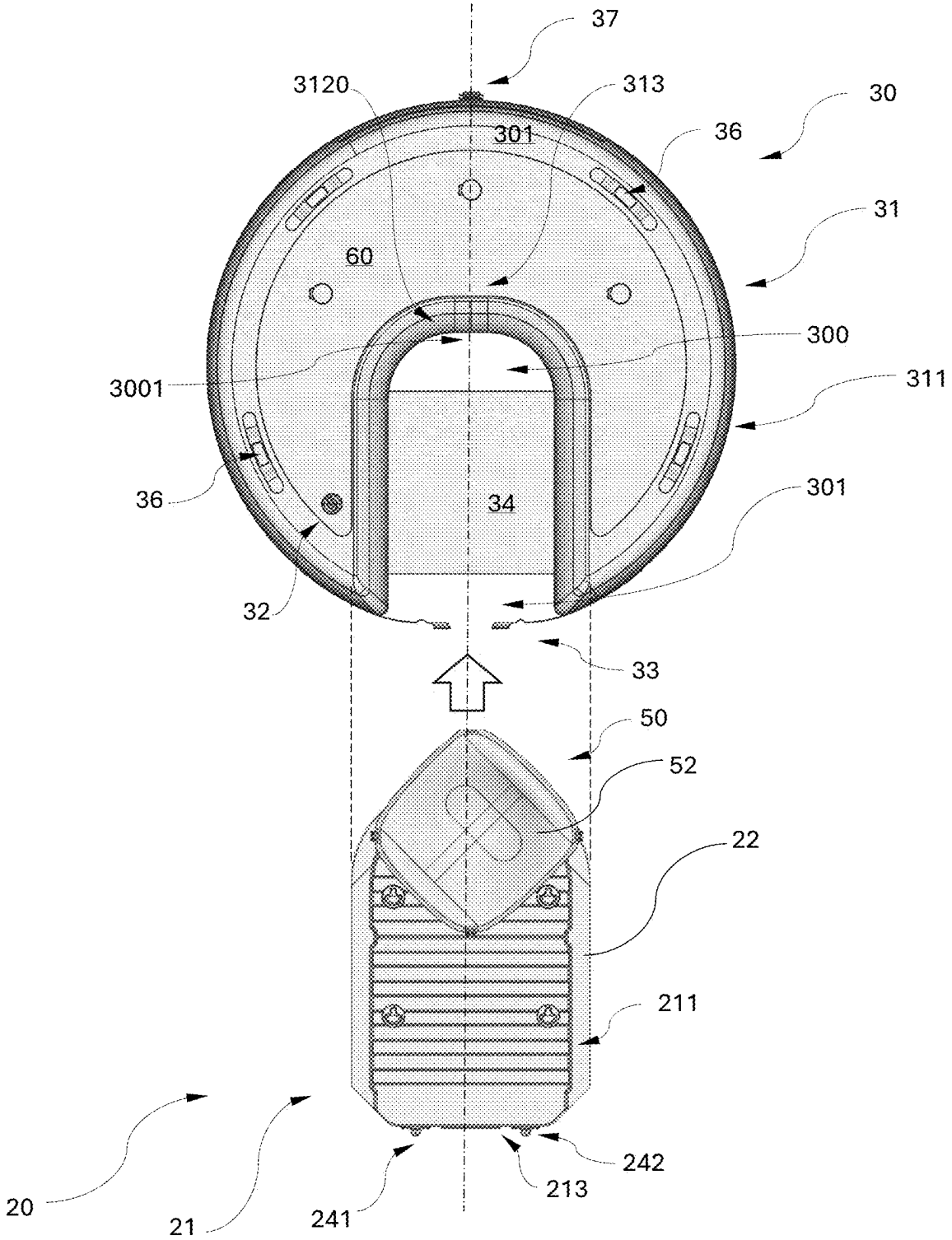
37
3120
313
30
301
36
31
60
300
3001
311
36
34
301
32
33
50
52
22
211
20
21
241
213
242

FIG. 9

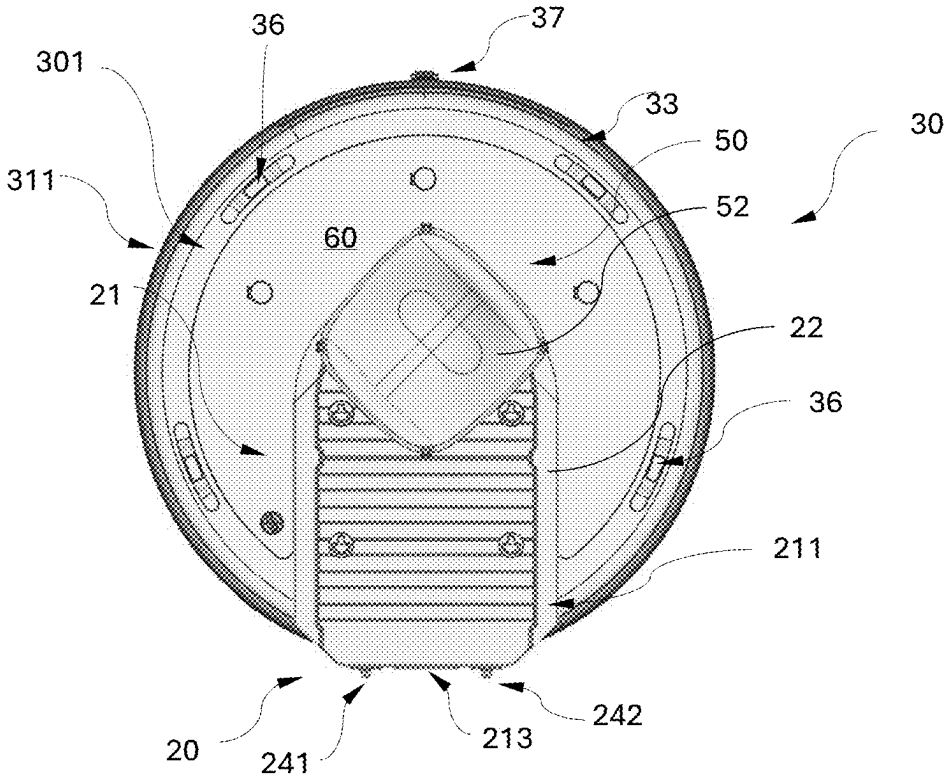
36
37
301
33
50
30
311
52
60
21
22
36
211
20
241
213
242

FIG. 10

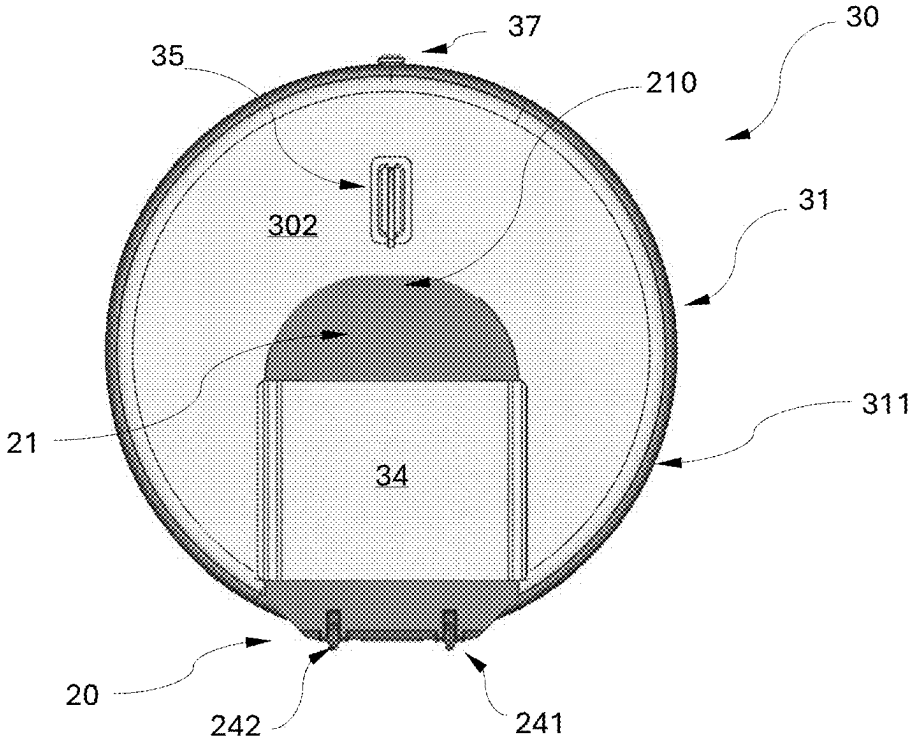
37
30
35
210
302
31
21
311
34
20
242
241

FIG. 11

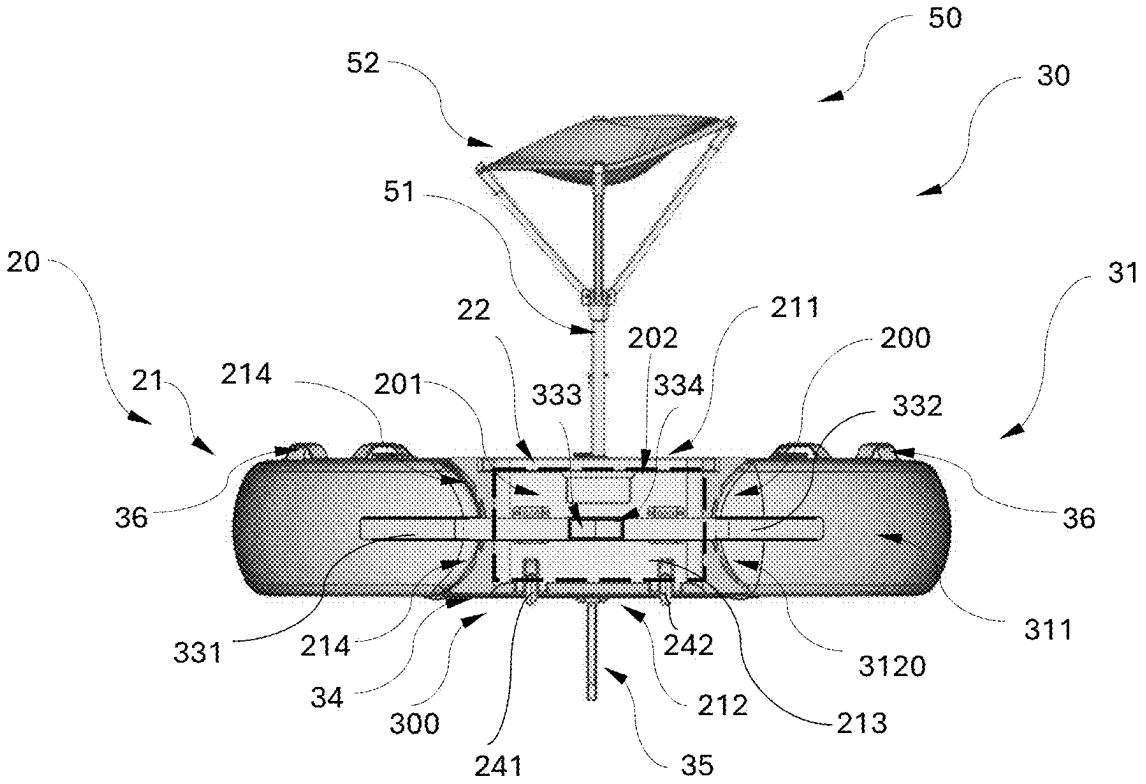
50
52
30
51
20
31
22
211
202
200
21
214
201
333
334
332
36
36
311
331
214
242
3120
34
212
300
213
241
35

FIG. 12

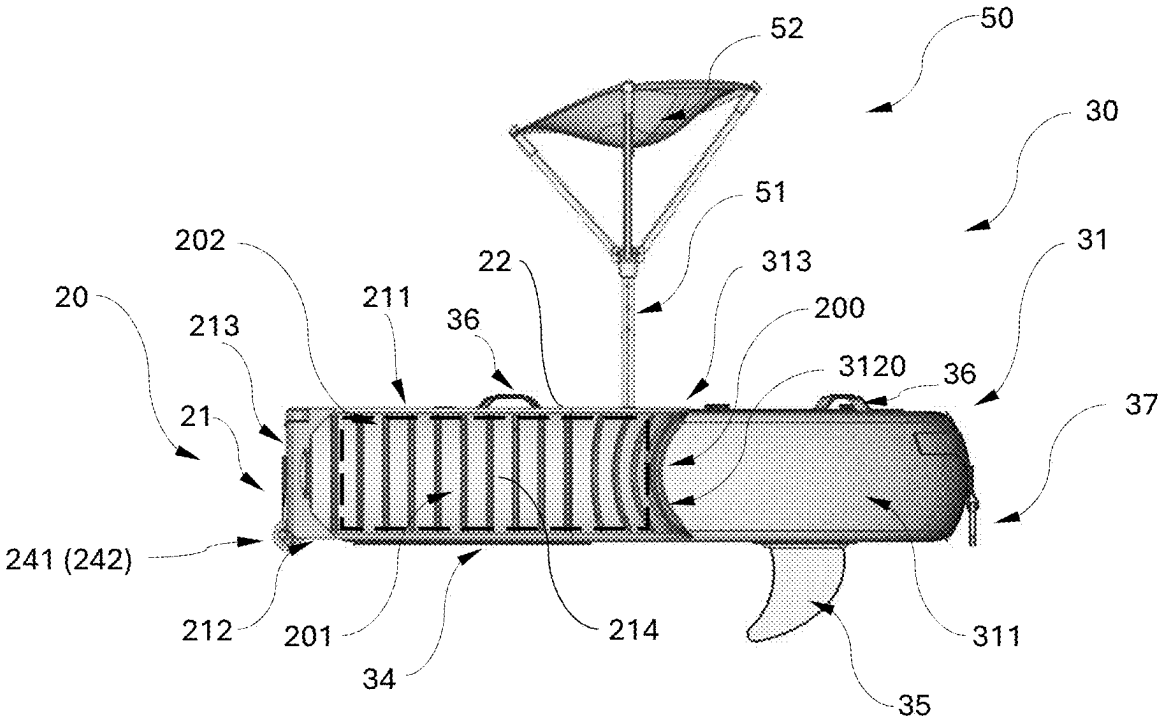
52
50
30
51
202
22
313
31
20
211
36
200
213
3120
36
21
37
241 (242)
212
201
214
311
34
35

FIG. 13

PORTABLE AND INFLATABLE BOAT WITH SELF-SECURE AND STORAGE ARRANGEMENT

NOTICE OF COPYRIGHT

[0001] A portion of the disclosure of this patent document contains material which is subject to copyright protection. The copyright owner has no objection to any reproduction by anyone of the patent disclosure, as it appears in the United States Patent and Trademark Office patent files or records, but otherwise reserves all copyright rights whatsoever.

BACKGROUND OF THE PRESENT INVENTION

Field of Invention

[0002] The present invention relates to portable and inflatable boat, and more particularly to a portable and inflatable boat with self-secure and storage arrangement, wherein the engagement of its support frame and floating unit is self-secured automatically after inflation of the floating unit and at least one storage arrangement is provided in the support frame.

Description of Related Arts

[0003] Inflatable fishing boats are commonly used for fishing on a lake or a reservoir. As shown in FIG. **1** and FIG. **2**, conventional inflatable fishing boats work much like any other inflatable boat that needs to be inflated before use. This is typically done using a manual or electric pump. Once inflated, the boat becomes rigid and buoyant, ready for use on the water. Inflatable fishing boats are typically made from durable materials like PVC or Hypalon. These materials are tough enough to withstand punctures and abrasions while remaining lightweight and portable. Some inflatable fishing boats feature multiple air chambers. Even if one chamber is punctured, the others will keep the boat afloat, enhancing safety. Additionally, inflatable boats often have wide hulls or pontoons, providing stability on the water, even in rough conditions.

[0004] One of the significant advantages of inflatable fishing boats is their portability. When deflated, they can be rolled up or folded down to a compact size, making them easy to transport in a car trunk or storage bag. This feature makes them ideal for anglers who don't have space for a traditional boat or who want to explore remote fishing spots.

[0005] Besides the inflatable fishing boats that have mounts for oars, allowing the user to row manually as shown in FIG. **1** and FIG. **2**. Improved inflatable fishing boats, as shown in FIG. **3** and FIG. **4**, are provided recently that can both allow the user to row manually and accommodate small outboard motors or electric trolling motors for powered propulsion by mounting a rigid frame **1** between two opposing sides of the circular inflatable buoy **2**.

[0006] However, the electric motor powered inflatable fishing boat, as shown in FIG. **3**, merely allows the user to sit on a sideboard **1.1** extended on top of a side of the inflatable buoy **2** that adversely affects the stability of the inflatable fishing boat and operate the control unit **1.2**, wherein the weight of the user applied to one side of the inflatable fishing boat may cause the fishing boat capsizing or overturning. Also, when the user has to stand up to perform some desired activities during fishing, the two feet of the user can only stand in two small limiting semicircular spaces **2.1**, **2.2** respectively. It is difficult for the user to keep balance during the fishing operation. It is always a hazard to the user of such conventional inflatable fishing boat to prevent overturning of the boat or falling into the water.

[0007] FIG. **4** illustrates an alternative mode of the rigid frame **1** which provide two side panels **1.32**, **1.32** extended from two sides thereof that allows the user to put a chair thereon for the user to sit so that the weight of the user can apply to a central position of the inflatable buoy **2** of the inflatable fishing boat, or alternatively the user may stand on the two side panels **1.31**, **1.32**. However, if a chair put on the two side panels **1.31**, **1.32**, then the user has no where to stand. Accordingly, the conventional inflatable fishing boat as shown in FIG. **4** fails to provide both the sitting and standing postures for the user to fish while maintaining good balance for the user and excellent stability for the inflatable fishing boat.

[0008] One common drawback of the buoy type inflatable fishing boat as shown in FIG. **3** and FIG. **4** is the difficulty of mounting the rigid frame securely in position because the inflatable buoy is made of PVC or Hypalon in hollow ring shape without any fastening means provided. It is hard to operate the control unit and unsafe to sit thereon once the rigid frame **1** is loose, especially when the user sits on the sideboard **1.1** at one end of the rigid frame **1**, the air in the inflatable buoy **2** will be compressed sidewards due to the weight of the user.

[0009] Further, it is preferred to provide storage compartment for the user to store required fishing equipment and fishes caught. Where and how to provide such storage compartment(s) without complicating the configuration and increasing the manufacturing cost of the inflatable fishing boat are unsolved problems to these conventional inflatable fishing boat.

[0010] Another unsolved problem is the transportation of the inflatable fishing boat. Even though the inflatable fishing boat is configured to be carried in the trunk of most vehicles but the user still has to carry the relatively bulky and heavy inflatable fishing boat from the vehicle to the shore of lake or reservoir.

SUMMARY OF THE PRESENT INVENTION

[0011] The invention is advantageous in that it provides a portable and inflatable boat with self-secure and storage arrangement, which does not require any fastening means to secure the inflatable floating body and the hard shell body integrally together to form the inflatable boat, wherein after the inflatable floating body is inflated with air to a standard pressure, the air compress in the inflatable floating body applies a radial and inward pressure against the hard shell body to securely mount the hard shell body in position in such a manner that the hard shell body is unable to move upward, downward nor sideward with respect to the inflatable floating body.

[0012] Another advantage of the invention is to provide a portable and inflatable boat, which inflatable floating body and hard shell body are self-secured and engaged with each other by inflating air in the inflatable floating body to form an integral body. Also, the engagement of the inflatable floating body and the hard shell body is self-released and

after the deflation of the inflatable floating body and the inflatable floating body and the hard shell body are separated automatically.

[0013] Another advantage of the invention is to provide a portable and inflatable boat, which allows a sitting post of a seat unit to detachably mount on the hard shell body so that the user may sit on the inflatable boat in a stable manner while the entire upper surface of the hard shell body forms a standing and operation platform for the user to optionally stand thereon and/or operate the fishing equipment thereon during fishing.

[0014] Another advantage of the invention is to provide a portable and inflatable boat, wherein the inflatable floating body is configured to have a U-shape defining a concave engagement groove to receive and mount the hard shell body therein securely while the sitting post is arranged in a central portion of the inflatable boat, such that the weight of the user sat on the seat unit is applied to the central portion of the inflatable boat to ensure a stable and balance sitting posture for the user.

[0015] Another advantage of the invention is to provide a portable and inflatable boat, which hard shell body is configured to provide a plurality of engaging ribs spacedly protruded on the concave engaging surface defining the concave engagement groove to press against the inflated inflatable floating body, so as to further enhance the engagement between the inflatable floating body and the hard shell body and prevent any relative sideward movement of the inflated floating body with respect to the hard shell body.

[0016] Another advantage of the invention is to provide a portable and inflatable boat, wherein the sitting post is rotatably mounted on the hard shell body so that the user may change his or her facing position by rotating the sitting post with respect to the hard shell body while the feet of the user sat on the seat unit can be rest on the upper surface of hard shell body or the top side of the inflatable floating body.

[0017] Another advantage of the invention is to provide a portable and inflatable boat, which hard shell body is configured to be a container like a suitcase that has a storage cavity provided therein and comprises a cover to enclose the storage cavity, such that the user may store the inflatable floating body after deflation in the storage cavity or use the storage cavity to store personal items, fishing equipment and/or even the fishes caught in the storage cavity while the inflatable floating body is inflated and securely engaged with the hard shell body to form the inflatable boat in use. In other words, the hard shell body is a hollow body so that it is light in weight and may also be floatable when the hard shell body is made of plastic or wood.

[0018] Another advantage of the invention is to provide a portable and inflatable boat, which hard shell body comprises one or more wheels for ease of dragging the floating boat to roll on the ground or allowing the user to carry the hard shell body with the deflated floating boat received therein sliding on the ground.

[0019] Another advantage of the invention is to provide a portable and inflatable boat, which is light in weight, enabling the user to preassemble and carry directly with a vehicle such as a pickup and or a truck.

[0020] Another advantage of the invention is to provide a portable and inflatable boat, which further provides a top panel mounted on the inflated floating body so as to combine with the upper surface of the hard shell body to provide an enlarged rigid surface for the user. In addition, multiple handles are able to be mounted on the top side **301** of the inflatable floating body to facilitate one or more passengers sitting on the top panel to grip thereto to enhance stability and balancing of the passengers.

[0021] Another advantage of the invention is to provide a portable and inflatable boat, which is configured to be functioned as a floating platform on a swimming pool or other water surface that swimmers can rest thereon or simply grip to the handles.

[0022] Additional advantages and features of the invention will become apparent from the description which follows and may be realized by means of the instrumentalities and combinations particular point out in the appended claims.

[0023] According to the present invention, the foregoing and other objects and advantages are attained by a portable and inflatable boat with self-secure and storage arrangement, comprising:

[0024] a hard shell body, comprising a container unit, made of rigid material, having an upper surface, a lower surface, an end surface extended between end sides of the upper surface and the lower surface, and a concave engaging surface extended between the upper surface and the lower surface to define a concave engagement groove; and

[0025] an inflatable floating platform, comprising an inflatable floating body which is a hollow body made of durable material and has a circular outer side and a U-shape inner side which defines a U-shape mounting slot extended from the outer side to a central portion thereof, wherein the U-shape inner side forms a convex engagement ridge along the U-shape mounting slot when the inflatable floating body is inflated with air therein, wherein the U-shape mounting slot of the inflatable floating body after inflation is configured to have a size and a shape to fittingly receive the hard shell body therein and the convex engagement ridge of the inflatable floating body after inflation is shaped and sized to match and press against the concave engaging surface of the container unit of the hard shell body so as to engage the hard shell body with the inflated inflatable floating body securely due to a predetermined air pressure in the inflated inflatable floating body.

[0026] In one embodiment, a storage cavity is defined in the container unit and has an upper opening on the upper surface, and that the container body of the hard shell body further comprises a cover configured to be detachably mounted on the upper surface of the container unit to enclose the storage cavity.

[0027] In one embodiment, the storage cavity of the container unit of the hard shell body is at least large enough to receive the inflatable floating platform after deflation therein.

[0028] In one embodiment, the inflatable floating platform further comprises a bottom panel, which is integrally mounted on a bottom side of the inflatable floating body across the U-shape mounting slot to ensure the size and the shape of the U-shape mounting slot, to guide an engagement of the inflated inflatable floating body and the hard shell body and to support the bottom surface of the container unit of the hard shell body.

[0029] In one embodiment, the hard shell body comprises a seat base configured to detachably connect a sitting post of a seat unit in a rotatable manner, wherein the seat unit further

comprises a seat member connected to a top portion of the sitting post which is upwardly extended from the upper surface of the hard shell body. Preferably, the seat base is arranged at the upper surface of the hard shell body and positioned adjacent to a curved engaging end thereof, so that the user may sit on the inflatable boat in a stable manner while the entire upper surface of the hard shell body engaged with the inflatable floating body while the upper surface of the hard shell body forms a standing and operation surface for the user to operationally stand thereon and/or operate the fishing equipment thereon during fishing.

[0030] In one embodiment, the hard shell body has a plurality of engaging ribs spacedly protruded on the concave engaging surface to press against the inflated inflatable floating body, so as to further enhance the engagement between the inflatable floating body and the hard shell body and prevent any relative sideward movement of the inflated floating body with respect to the hard shell body.

[0031] In one embodiment, the hard shell body comprises one or more wheels rotatably to an outer end thereof, wherein the one or more wheels are configured to be rolling on the ground for transportation of the hard shell body with the inflatable floating body stored in the storage cavity when it is not inflated, or the entire portable and inflatable boat when the inflatable floating body is inflated and engaged with the hard shell body.

[0032] In one embodiment, the inflatable floating platform further comprises a rudder installed to the bottom side thereof.

[0033] In one embodiment, the inflatable floating body further comprises a locker arrangement at an open end of the mounting slot for holding and locking the hard shell body in the mounting slot after the inflatable floating body is inflated.

[0034] In accordance with another aspect of the invention, the present invention provides a method of assembling a portable and inflatable boat, comprising steps of:

[0035] positioning a hard shell body in a U-shape mounting slot of an inflatable floating body with a curved engaging end of the hard shell body positioning at a bottom end of the U-shape mounting slot; and

[0036] inflating the inflatable floating body with air to a predetermined air pressure therein until a convex engagement ridge of a U-shape inner side of the inflatable floating body presses against a concave engaging surface extended between an upper surface and a lower surface of the hard shell body such that the hard shell body is engaged with the inflatable floating body to form the portable and inflatable boat.

[0037] In accordance with another aspect of the invention, the present invention provides an alternative method of assembling a portable and inflatable boat, comprising steps of:

[0038] inflating an inflatable floating body with air until a U-shape inner side thereof forming a convex engagement ridge and defining a U-shape mounting slot;

[0039] inserting a hard shell body in the U-shape mounting slot of the inflatable floating body via an open end of the U-shape mounting slot until a curved engaging end of the hard shell body positioning at a bottom end of the U-shape mounting slot; and

[0040] further inflating the inflatable floating body with air to a predetermined air pressure until the convex engagement ridge of a U-shape inner side of the inflatable floating body presses against a concave engaging surface extended between an upper surface and a lower surface of the hard shell body such that the hard shell body is engaged with the inflatable floating body to form the portable and inflatable boat.

[0041] Still further objects and advantages will become apparent from a consideration of the ensuing description and drawings.

[0042] These and other objectives, features, and advantages of the present invention will become apparent from the following detailed description, the accompanying drawings, and the appended claims.

BRIEF DESCRIPTION OF THE DRAWINGS

[0043] FIG. **1** is a perspective view of a first conventional inflatable fishing boat.

[0044] FIG. **2** is a perspective view of a second conventional inflatable fishing boat.

[0045] FIG. **3** is a perspective view of a third conventional inflatable fishing boat.

[0046] FIG. **4** is a perspective view of a fourth conventional inflatable fishing boat.

[0047] FIG. **5** is a perspective view of a hard shell body of a portable and inflatable boat according to a preferred embodiment of the present invention.

[0048] FIG. **6** is another perspective view of the hard shell body of the portable and inflatable boat according to the above preferred embodiment of the present invention.

[0049] FIG. **7** is a perspective view of an inflatable floating platform of the portable and inflatable boat according to a preferred embodiment of the present invention.

[0050] FIG. **8** is another perspective view of the inflatable floating platform of the portable and inflatable boat according to the above preferred embodiment of the present invention.

[0051] FIG. **9** is a top view of the portable and inflatable boat before assembling according to the above preferred embodiment of the present invention.

[0052] FIG. **10** is a top view of the portable and inflatable boat after assembled according to the above preferred embodiment of the present invention.

[0053] FIG. **11** is a bottom view of the portable and inflatable boat after assembled according to the above preferred embodiment of the present invention.

[0054] FIG. **12** is an end view of the portable and inflatable boat after assembled according to the above preferred embodiment of the present invention.

[0055] FIG. **13** is a partial sectional elevation view of the portable and inflatable boat after assembled according to the above preferred embodiment of the present invention.

DETAILED DESCRIPTION OF THE PREFERRED EMBODIMENT

[0056] The following description is disclosed to enable any person skilled in the art to make and use the present invention. Preferred embodiments are provided in the following description only as examples and modifications will be apparent to those skilled in the art. The general principles defined in the following description would be applied to other embodiments, alternatives, modifications, equivalents, and applications without departing from the spirit and scope of the present invention.

[0057] In the description of the present invention, unless explicitly stated otherwise and qualified, terms such as "connected," "attached," and "fixed" should be construed broadly. For instance, these terms may indicate a permanent connection or a detachable one, or they may refer to a whole unit. They can signify a mechanical linkage, an electrical connection, direct coupling, or indirect interaction through an intermediary medium. Whether these terms imply an internal connection between two elements or an interactive relationship between them will depend on the specific context and the understanding of those skilled in the art.

[0058] Throughout this invention, unless explicitly stated otherwise and qualified, when the first feature is described as being "above" or "below" the second feature, this may entail direct physical contact between the two features. Alternatively, it may signify that the first and second features are not in direct contact but are linked through the involvement of additional features. Additionally, the description of the first feature being "above," "over," or "on top of" the second feature includes scenarios where the first feature is positioned directly above or diagonally above the second feature or simply means that the first feature is situated at a higher horizontal level than the second feature. Conversely, when the first feature is referred to as "below," "under," or "beneath" the second feature, it encompasses cases where the first feature is directly below or diagonally below the second feature or simply implies that the first feature's horizontal height is less than that of the second feature.

[0059] In this embodiment's description, terms such as "up," "down," "right," and "left" are used to describe orientations or positional relationships. These descriptions are based on the orientations or positions depicted in the drawings and are employed for ease of explanation and simplification of operation. They should not be construed as indications or implications that the device or element being discussed must possess a specific orientation, be constructed in a particular manner, or operate exclusively in a certain orientation. Furthermore, terms such as "first" and "second" are employed solely for the purpose of distinction in the description and do not carry any particular significance.

[0060] Referring to FIG. **5** to FIG. **11**, a portable and inflatable boat according to a preferred embodiment of the present invention is illustrated, which comprises a hard shell body **20** and an inflatable floating platform **30**.

[0061] The hard shell body **20**, as shown in FIG. **5**, FIG. **6** and FIG. **13**, comprises a container unit **21**, made of rigid material, having an upper surface **211**, a lower surface **212**, an end surface **213** extended between end sides of the upper surface **211** and the lower surface **212**, and a concave engaging surface **214** extended between the upper surface **211** and the lower surface **212** to define a concave engagement groove **200**.

[0062] According to the preferred embodiment, the hard shell body **20** provides a storage arrangement which is configured by a storage cavity **201** and a cover **22**, wherein the storage cavity **201** is formed in the container unit **21** of the hard shell body **20** and an upper opening **202** formed on the upper surface **211** communicating the storage cavity **201** with outside. The hard shell body **20** further comprises the cover **22** configured to be detachably mounted on the upper surface **211** of the container unit **21** to enclose the storage cavity **201**. It is worth mentioning that the storage cavity **201 2** of the container unit **21** of the hard shell body **20** is preferred at least large enough to receive the inflatable floating platform **30** after deflation therein.

[0063] The inflatable floating platform **30** comprises an inflatable floating body **31** which is a hollow body made of durable material and can float on water after being inflated air therein via an inflation valve **32** provided on the inflatable floating body **31**. The inflatable floating body **31** has a circular outer side **311** and a U-shape inner side **312** defined between a top side **301** and a bottom side **302** of the inflatable floating body **31**, wherein the U-shape inner side **312** defines a U-shape mounting slot **300** extended from the outer side **311** to a central portion **313** thereof. The U-shape inner side **312** forms a convex engagement ridge **3120** along the U-shape mounting slot **300** when the inflatable floating body **31** is inflated with air therein, as shown in FIG. **7** and FIG. **8**.

[0064] Referring to FIG. **12** and FIG. **13**, the U-shape mounting slot **300** of the inflatable floating body **31** after inflation is configured to have a size and a shape to fittingly receive the hard shell body **20** therein and the convex engagement ridge **3120** of the inflatable floating body **31** after inflation is shaped and sized to match and press against the concave engaging surface **214** of the container unit **21** of the hard shell body **20** so as to engage the hard shell body **20** with the inflated inflatable floating body **31** securely due to a predetermined air pressure in the inflated inflatable floating body **31**.

[0065] It is appreciated that, before inflation, there is no air pressure in the inflatable floating body **31** and the deflated inflatable floating body **31** is not engaged with the rigid hard shell body **20**. In other words, the portable and inflatable boat **31** can simply be disassembled by deflating the inflatable floating boat **31** through the inflation valve **32** such that the convex engagement ridge **3120** of the inflatable floating body **31** automatically disengaged with the concave engaging surface **214** of the container unit **21** of the hard shell body **20**.

[0066] On the other hand, after inflation, the inflatable floating body **31** is filled with air though the inflation valve **32** until under the predetermined air pressure, as shown FIG. **12**, such that the inner side **312** of the inflatable floating body **31** extends in the concave engagement groove **200** and the convex engagement ridge **3120** curvedly presses against the concave engaging surface **214** so as to assemble the inflatable floating platform **30** with the hard shell body **20**, as shown in FIG. **10** to FIG. **13**. The engagement of the convex engagement ridge **3120** and the concave engaging surface **214** renders a secure connection between the inflatable floating body **311** of the inflatable floating platform **30** and the container unit **21** of the hard shell body **20** that prevent the hard shell body **20** from moving upward or downward with respect to the inflatable floating body **311**.

[0067] Further, the hard shell body **20** has a plurality of engaging ribs **2141** spacedly protruded on the concave engaging surface **214** and extended from an upper portion of the concave engaging surface **214** adjacent to the upper surface **211** to a lower portion of the concave engaging surface **214** adjacent to the lower surface **212**, so that after the inflatable floating body **31** is inflated to the predetermined air pressure, each of the plurality of engaging ribs **2141** substantially presses against the inner side **312** of the inflated inflatable floating body **31** to provide a friction significantly formed between the concave engaging surface **213** and the convex engaging surface **3120** to prevent

relative lateral movement between the inflated inflatable floating body **31** and the hard shell body **20**, so as to further enhance the engagement between the inflatable floating body **31** and the hard shell body **20** by avoiding any relative sideward movement of the inflated floating body **31** with respect to the hard shell body **20**.

[0068] According to the preferred embodiment, referring to FIG. **7** and FIG. **12**, the inflatable floating body **30** further comprises a locker arrangement **33** at an open end **301** of the U-shape mounting slot **300** for holding and locking the hard shell body **20** in the U-shape mounting slot **300** after the inflatable floating body **20** is inflated. The locker arrangement **33** comprises a first locking element **331** having one end affixed and extended from a first end of the outer side **311** of the inflatable floating body **31**, a second locking element **332** having one end affixed and extended from a second end of outer side **311** of the inflatable floating body **31**, a pair of first and second lockers, embodied as hook and loop fasteners, **333**, **334** provided at another frees ends of the first and second locking elements **331**, **332**, as shown in FIG. **7**, such that, after the hard shell body **20** is assembled in the U-shape mounting slot **300** of the inflatable floating body **31**, as shown in FIG. **12**, the first and second lockers **333**, **334** can be fastened with each other to connect the first and second locking elements **331**, **332** so as to tight and lock the hard shell body **20** in the U-shape mounting slot **300**, so as to prevent the hard shell body **20** from withdrawing from the U-shaped mounting slot **300** via the open end **301** thereof while any external pulling force applied to the hard shell body **20** is larger than the friction between the applied to the concave engaging surface **214** with the engaging ribs **2141** of the hard shell body **20** and the convex engaging surface **3120** of the inner side **312** of the inflatable floating body **31**.

[0069] According to the preferred embodiment, as shown in FIG. **7**-FIG. **8** and FIG. **11**-FIG. **13**, the inflatable floating platform **30** further comprises a bottom panel **34**, which is integrally mounted on a bottom side **302** of the inflatable floating body **31** across the U-shape mounting slot **300** for ensuring the size and the shape of the U-shape mounting slot **300**, guiding an engagement of the inflated inflatable floating body **31** and the hard shell body **20** and supporting the bottom surface **212** of the container unit **21** of the hard shell body **20**.

[0070] Referring to FIG. **5**, FIG. **10**, FIG. **12**, and FIG. **13**, the upper surface **211** of the inflatable floating body **21**, including the cover **22** detachably mounted thereon, forms a standing and operation platform for the user to operationally sand thereon and/or operate the fishing equipment thereon during fishing. It is appreciated that, according to the preferred embodiment, the portable and inflatable boat further comprises a collapsible seat unit **50** and, correspondingly, the hard shell body **21** comprises a seat base **23**. The seat unit **50** comprises a sitting post **51**, which is preferred to be configured extensible, and a collapsible seat member **52** fastened to a top portion of the seat post **51**. which is upwardly extended from the upper surface **211** of the hard shell body **20**. The seat base **23** is configured to detachably connect a bottom portion of the sitting post **51** of the seat unit **50** in a rotatable manner. Preferably, the seat base **23** is arranged at the upper surface **211** of the hard shell body **20** and positioned adjacent to a curved engaging end **210** thereof, so that the user may sit on the portable and inflatable boat of the present invention in a stable manner while the entire upper surface **211** of the hard shell body **20** engaged with the inflatable floating body **31**.

[0071] Since the sitting post **51** is rotatably mounted on the hard shell body **20** so that the user may change his or her facing position by rotating the sitting post **51** with respect to the hard shell body **20** while the feet of the user sat on the seat unit **50** can be rest on the upper surface **211** of hard shell body **20** or the top side **301** of the inflatable floating body **31**.

[0072] According to preferred embodiment, as shown in FIG. **5** and FIG. **6**, the hard shell body **20** comprises a pair of wheels **241**, **242** rotatably to a lower side of an outer end **210'** thereof, wherein the wheels **241**, **242** are configured to be rolling on the ground for transportation of the hard shell body **20** with the inflatable floating platform **30** stored in the storage cavity **201** when it is not inflated, or the entire portable and inflatable boat when the inflatable floating body **31** is inflated and engaged with the hard shell body **20**, as shown in FIG. **10** to FIG. **13**.

[0073] It is worth mentioning that the inflatable floating platform **30** further comprises a rudder **35** installed to the bottom side **302** thereof.

[0074] In view of above, the portable and inflatable boat of the present invention is a self-secure device which does not involve manual assembling operation such as conducting steps to fasten or to secure the hard shell body **20** with the inflatable floating platform **30**. Due to the configuration of the concave engagement groove **200** of the hard shell body **20** and the convex engagement ridge **3120** of the inflatable floating body **31**, the portable and inflatable boat can be assembled by the following steps:

[0075] positioning the hard shell body **20** in the U-shape mounting slot **300** of the inflatable floating body **31** with a curved engaging end **210** of the hard shell body **20** positioning at a bottom end **3001** of the U-shape mounting slot **300**; and

[0076] inflating the inflatable floating body **31** with air to the predetermined air pressure therein until the convex engagement ridge **3120** of the U-shape inner side **312** of the inflatable floating body **31** presses against the concave engaging surface **214** extended between the upper surface **211** and the lower surface **212** of the hard shell body **20** such that the hard shell body **20** is engaged with the inflatable floating body **31** to form the portable and inflatable boat.

[0077] Alternatively, a method of assembling the portable and inflatable boat comprises steps of:

[0078] inflating the inflatable floating body **31** with air until the U-shape inner side **312** thereof forming the convex engagement ridge **3120** and defining the U-shape mounting slot **300**;

[0079] inserting the hard shell body **20** in the U-shape mounting slot **300** of the inflatable floating body **31** via the open end **301** of the U-shape mounting slot **300** until the curved engaging end **210** of the hard shell body **20** positioning at the bottom end **3001** of the U-shape mounting slot **300**; and

[0080] further inflating the inflatable floating body **31** with air to the predetermined air pressure until the convex engagement ridge **3120** of the U-shape inner side **312** of the inflatable floating body **31** presses against the concave engaging surface **214** extended between the upper surface **211** and the lower surface **212** of the hard shell body **20** such that the hard shell

body **20** is engaged with the inflatable floating body **31** to form the portable and inflatable boat.

[0081] In other words, simply by inflating the inflatable floating body **31**, the hard shell body **20** is securely assembled with the inflatable floating body **31** automatically by engaging the convex engagement ridge **3120** with the concave engagement groove **200**. In addition, the portable and inflatable boat of the present is light in weight, enabling the user to preassemble and carry directly with a vehicle such as a pickup and or a truck.

[0082] It is worth mentioning that the portable and inflatable boat may further comprise a durable rigid C-shape top panel **60** mounted on the inflated floating body **31** so as to combine with the upper surface **211** of the hard shell body **20** to provide an enlarged rigid surface for the user. In addition, multiple handles **36** are able to be mounted on the top side **301** of the inflatable floating body **31** to facilitate one or more passengers sitting on the top panel **60** to grip thereto to enhance stability and balancing of the passengers.

[0083] Referring to FIG. **8**, for ease of pulling the portable and inflatable boat to rolling on the ground by the wheels **241**, **242**, the inflatable floating platform **30** comprises connector **37**, which is affixed to the outer side **311** at a position opposing the open end **301**, adapted for connecting a dragging rope or belt (not shown in FIGURES) for the user to pull for transportation.

[0084] It is worth mentioning that the hard shell body **20** is configured to be a container like a suitcase that has the storage cavity **201** provided therein that can be enclosed by the cover **22**, so that the user may store the inflatable floating body **31** after deflation in the storage cavity **201** or use the storage cavity **201** to store personal items, fishing equipment and/or even the fishes caught in the storage cavity **201** while the inflatable floating body **31** is inflated and securely engaged with the hard shell body **20** to form the portable and inflatable boat in use. In other words, the hard shell body **20** is a hollow body so that it is light in weight and may also be floatable when the hard shell body **20** is made of plastic or wood.

[0085] Furthermore, the portable and inflatable boat of the present invention can also be functioned as a floating platform on a swimming pool or other water surface that swimmers can rest thereon or simply grip to the handles **36**.

[0086] One skilled in the art will understand that the embodiment of the present invention as shown in the drawings and described above is exemplary only and not intended to be limiting.

[0087] It will thus be seen that the objects of the present invention have been fully and effectively accomplished. The embodiments have been shown and described for the purposes of illustrating the functional and structural principles of the present invention and are subjected to change without departure from such principles. Therefore, this invention includes all modifications encompassed within the spirit and scope of the following claims.

What is claimed is:

1. A portable and inflatable boat, comprising:

a hard shell body, comprising a container unit, made of rigid material, having an upper surface, a lower surface, an end surface extended between end sides of said upper surface and said lower surface, and a concave engaging surface extended between said upper surface and said lower surface to define a concave engagement groove; and

an inflatable floating platform, comprising an inflatable floating body which is a hollow body made of durable material and has a circular outer side and a U-shape inner side which defines a U-shape mounting slot extended from said outer side to a central portion of said inflatable floating body, wherein said U-shape inner side forms a convex engagement ridge along said U-shape mounting slot when said inflatable floating body is inflated with air therein, wherein said U-shape mounting slot of said inflatable floating body, after inflation, is configured to have a size and a shape to fittingly receive said hard shell body therein and said convex engagement ridge of said inflatable floating body, after inflation, is shaped and sized to match and press against said concave engaging surface of said container unit of said hard shell body so as to engage said hard shell body with said inflated inflatable floating body due to a predetermined air pressure in said inflatable floating body after inflation.

2. The portable and inflatable boat, as received in claim **1**, wherein said storage cavity is defined in said container unit and has an upper opening on said upper surface, and that said container body of said hard shell body further comprises a cover configured to be detachably mounted on said upper surface of said container unit to enclose said storage cavity.

3. The portable and inflatable boat, as recited in claim **1**, wherein said hard shell body has a plurality of engaging ribs spacedly protruded on said concave engaging surface and extended from an upper portion of said concave engaging surface adjacent to said upper surface to a lower portion of said concave engaging surface adjacent to said lower surface, such that after said inflatable floating body is inflated to said predetermined air pressure, each of said plurality of engaging ribs presses against said inner side of said inflated inflatable floating body to provide a friction between said concave engaging surface and said convex engaging surface.

4. The portable and inflatable boat, as recited in claim **2**, wherein said hard shell body has a plurality of engaging ribs spacedly protruded on said concave engaging surface and extended from an upper portion of said concave engaging surface adjacent to said upper surface to a lower portion of said concave engaging surface adjacent to said lower surface, such that after said inflatable floating body is inflated to said predetermined air pressure, each of said plurality of engaging ribs presses against said inner side of said inflated inflatable floating body to provide a friction between said concave engaging surface and said convex engaging surface.

5. The portable and inflatable boat, as recited in claim **1**, wherein said hard shell body comprises a seat base configured to detachably connect a sitting post of a seat unit in a rotatable manner, wherein said seat unit further comprises a seat member connected to a top portion of said sitting post which is upwardly extended from said upper surface of said hard shell body.

6. The portable and inflatable boat, as recited in claim **5**, wherein said seat base is arranged at said upper surface of said hard shell body and positioned adjacent to a curved engaging end thereof.

7. The portable and inflatable boat, as recited in claim **2**, wherein said hard shell body comprises a seat base configured to detachably connect a sitting post of a seat unit in a rotatable manner, wherein said seat unit further comprises a seat member connected to a top portion of said sitting post which is upwardly extended from said upper surface of said

hard shell body, wherein said seat base is arranged at said upper surface of said hard shell body and positioned adjacent to a curved engaging end thereof.

8. The portable and inflatable boat, as recited in claim **3**, wherein said hard shell body comprises a seat base configured to detachably connect a sitting post of a seat unit in a rotatable manner, wherein said seat unit further comprises a seat member connected to a top portion of said sitting post which is upwardly extended from said upper surface of said hard shell body, wherein said seat base is arranged at said upper surface of said hard shell body and positioned adjacent to a curved engaging end thereof.

9. The portable and inflatable boat, as recited in claim **4**, wherein said hard shell body comprises a seat base configured to detachably connect a sitting post of a seat unit in a rotatable manner, wherein said seat unit further comprises a seat member connected to a top portion of said sitting post which is upwardly extended from said upper surface of said hard shell body, wherein said seat base is arranged at said upper surface of said hard shell body and positioned adjacent to a curved engaging end thereof.

10. The portable and inflatable boat, as recited in claim **1**, wherein said inflatable floating platform further comprises a bottom panel, which is integrally mounted on a bottom side of said inflatable floating body across said U-shape mounting slot for ensuring said size and said shape of said U-shape mounting slot, guiding an engagement of said inflatable floating body and said hard shell body after inflation and supporting said bottom surface of said container unit of said hard shell body.

11. The portable and inflatable boat, as recited in claim **2**, wherein said inflatable floating platform further comprises a bottom panel, which is integrally mounted on a bottom side of said inflatable floating body across said U-shape mounting slot for ensuring said size and said shape of said U-shape mounting slot, guiding an engagement of said inflatable floating body and said hard shell body after inflation and supporting said bottom surface of said container unit of said hard shell body.

12. The portable and inflatable boat, as recited in claim **3**, wherein said inflatable floating platform further comprises a bottom panel, which is integrally mounted on a bottom side of said inflatable floating body across said U-shape mounting slot for ensuring said size and said shape of said U-shape mounting slot, guiding an engagement of said inflatable floating body and said hard shell body after inflation and supporting said bottom surface of said container unit of said hard shell body.

13. The portable and inflatable boat, as recited in claim **5**, wherein said inflatable floating platform further comprises a bottom panel, which is integrally mounted on a bottom side of said inflatable floating body across said U-shape mounting slot for ensuring said size and said shape of said U-shape mounting slot, guiding an engagement of said inflatable floating body and said hard shell body after inflation and supporting said bottom surface of said container unit of said hard shell body.

14. The portable and inflatable boat, as recited in claim **9**, wherein said inflatable floating platform further comprises a bottom panel, which is integrally mounted on a bottom side of said inflatable floating body across said U-shape mounting slot for ensuring said size and said shape of said U-shape mounting slot, guiding an engagement of said inflatable floating body and said hard shell body after inflation and supporting said bottom surface of said container unit of said hard shell body.

15. The portable and inflatable boat, as recited in claim **1**, wherein said hard shell body comprises one or more wheels rotatably to an outer end thereof, wherein said one or more wheels are configured to be rolling on ground for transportation of said hard shell body with said inflatable floating body stored in said storage cavity when it is not inflated, or for transportation of said portable and inflatable boat when said inflatable floating body is inflated and engaged with said hard shell body.

16. The portable and inflatable boat, as recited in claim **2**, wherein said hard shell body comprises one or more wheels rotatably to an outer end thereof, wherein said one or more wheels are configured to be rolling on ground for transportation of said hard shell body with said inflatable floating body stored in said storage cavity when it is not inflated, or for transportation of said portable and inflatable boat when said inflatable floating body is inflated and engaged with said hard shell body.

17. The portable and inflatable boat, as recited in claim **3**, wherein said hard shell body comprises one or more wheels rotatably to an outer end thereof, wherein said one or more wheels are configured to be rolling on ground for transportation of said hard shell body with said inflatable floating body stored in said storage cavity when it is not inflated, or for transportation of said portable and inflatable boat when said inflatable floating body is inflated and engaged with said hard shell body.

19. The portable and inflatable boat, as recited in claim **5**, wherein said hard shell body comprises one or more wheels rotatably to an outer end thereof, wherein said one or more wheels are configured to be rolling on ground for transportation of said hard shell body with said inflatable floating body stored in said storage cavity when it is not inflated, or for transportation of said portable and inflatable boat when said inflatable floating body is inflated and engaged with said hard shell body.

20. The portable and inflatable boat, as recited in claim **10**, wherein said hard shell body comprises one or more wheels rotatably to an outer end thereof, wherein said one or more wheels are configured to be rolling on ground for transportation of said hard shell body with said inflatable floating body stored in said storage cavity when it is not inflated, or for transportation of said portable and inflatable boat when said inflatable floating body is inflated and engaged with said hard shell body.

21. The portable and inflatable boat, as recited in claim **14**, wherein said hard shell body comprises one or more wheels rotatably to an outer end thereof, wherein said one or more wheels are configured to be rolling on ground for transportation of said hard shell body with said inflatable floating body stored in said storage cavity when it is not inflated, or for transportation of said portable and inflatable boat when said inflatable floating body is inflated and engaged with said hard shell body.

* * * * *