US012404640B2

(12) **United States Patent**
Brownmiller et al.

(10) **Patent No.: US 12,404,640 B2**
(45) **Date of Patent: Sep. 2, 2025**

(54) **CATWALK FLOORBEAM CONNECTION SYSTEM**

(71) Applicant: **Sukup Manufacturing Co.**, Sheffield, IA (US)

(72) Inventors: **David Jay Brownmiller**, Mason City, IA (US); **Dustin Donahue Davis**, Nora Springs, IA (US); **Andrew Gene Sorensen**, Clear Lake, IA (US)

(73) Assignee: **SUKUP MANUFACTURING CO.**, Sheffield, IA (US)

(*) Notice: Subject to any disclaimer, the term of this patent is extended or adjusted under 35 U.S.C. 154(b) by 1218 days.

(21) Appl. No.: **17/191,888**

(22) Filed: **Mar. 4, 2021**

(65) **Prior Publication Data**

US 2021/0189742 A1 Jun. 24, 2021

Related U.S. Application Data

(63) Continuation of application No. 15/886,929, filed on Feb. 2, 2018, now Pat. No. 10,975,584.

(Continued)

(51) **Int. Cl.**

E01D 15/133	(2006.01)
E04G 5/16	(2006.01)
E04G 7/02	(2006.01)
E04G 7/30	(2006.01)
E04G 5/06	(2006.01)
E04G 5/14	(2006.01)

(52) **U.S. Cl.**

CPC ***E01D 15/133*** (2013.01); ***E04G 5/16*** (2013.01); ***E04G 7/02*** (2013.01); ***E04G 7/302*** (2013.01); *E04G 5/06* (2013.01); *E04G 2005/068* (2013.01); *E04G 5/14* (2013.01)

(58) **Field of Classification Search**

CPC E04G 5/06; E04G 5/16; E04G 2005/068; E04G 7/302; E01D 15/133; E04B 1/2612; E04B 2001/2644; E04B 2001/2676

See application file for complete search history.

(56) **References Cited**

U.S. PATENT DOCUMENTS

591,405 A * 10/1897 Jenkins E04B 5/29 52/702

610,832 A * 9/1898 Robinson E04B 5/29 52/702

(Continued)

Primary Examiner — Colleen M Chavchavadze

(74) *Attorney, Agent, or Firm* — Christopher A. Proskey; BrownWinick Law Firm

(57) **ABSTRACT**

A catwalk system having a pair of side trusses formed of a top cord and bottom cord connected by a plurality of vertical posts and diagonal posts. The bottom cords have a plurality of joints formed of a bottom plate, opposing side plates and wing plates that form a pocket. These pockets receive an end of floorbeams which are bolted to the side plates. The bottom plate also includes a wind brace section that receives an end of a diagonal wind brace therein. The fabricated side trusses are shipped to the job site where the catwalk is quickly and easily assembled by aligning a pair of side trusses in parallel space alignment and installing floorbeams in the pockets of opposing joints. To provide additional rigidity diagonal wind braces are installed in a zig-zag formation between diagonally opposite joints. This arrangement provides a quickly assembled catwalk that requires minimal assembly.

21 Claims, 78 Drawing Sheets

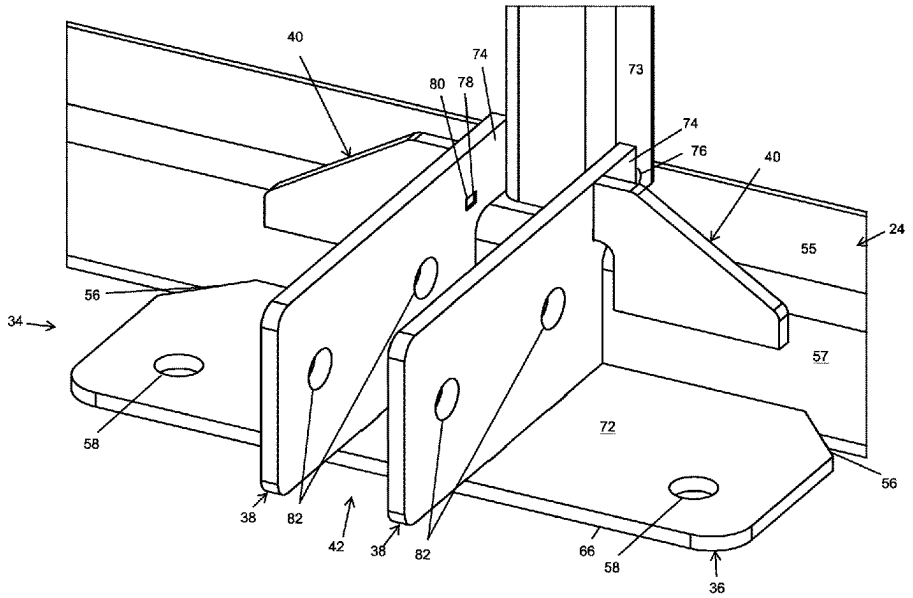

Related U.S. Application Data

(60) Provisional application No. 62/454,390, filed on Feb. 3, 2017.

(56) **References Cited**

U.S. PATENT DOCUMENTS

625,427 A * 5/1899 Stewart F16B 9/05 29/897.3
770,050 A * 9/1904 Dreyer F16B 7/0446 248/300
796,433 A * 8/1905 Kahn F16B 9/05 248/300
858,838 A * 7/1907 Tuteur E04B 1/2612 296/42
1,785,791 A * 12/1930 Ropp E04B 1/2612 52/702
2,106,084 A * 1/1938 Coddington E04C 3/08 52/655.1
3,537,221 A * 11/1970 Helfman F16B 9/058 D25/61
4,897,979 A * 2/1990 Colonias F16B 9/058 248/248
4,912,795 A * 4/1990 Johnson E01D 6/00 52/645
4,964,253 A * 10/1990 Loeffler E04B 7/063 52/643
4,982,548 A * 1/1991 Abbey E04B 1/0007 52/289
5,253,465 A * 10/1993 Gilb E04B 1/2612 52/643
7,568,253 B2 * 8/2009 de la Chevrotiere E01D 6/00 14/14
7,913,472 B2 * 3/2011 Troth E04B 7/063 52/696
8,443,569 B2 * 5/2013 Sias E04B 7/063 52/696
8,667,633 B2 * 3/2014 De La Chevrotiere ... E01D 6/00 52/690
8,720,155 B1 * 5/2014 Robell E04B 1/2612 52/489.1
10,179,992 B2 * 1/2019 Brekke E04B 1/2612
2016/0264384 A1 * 9/2016 Roodenburg B66C 23/365

* cited by examiner

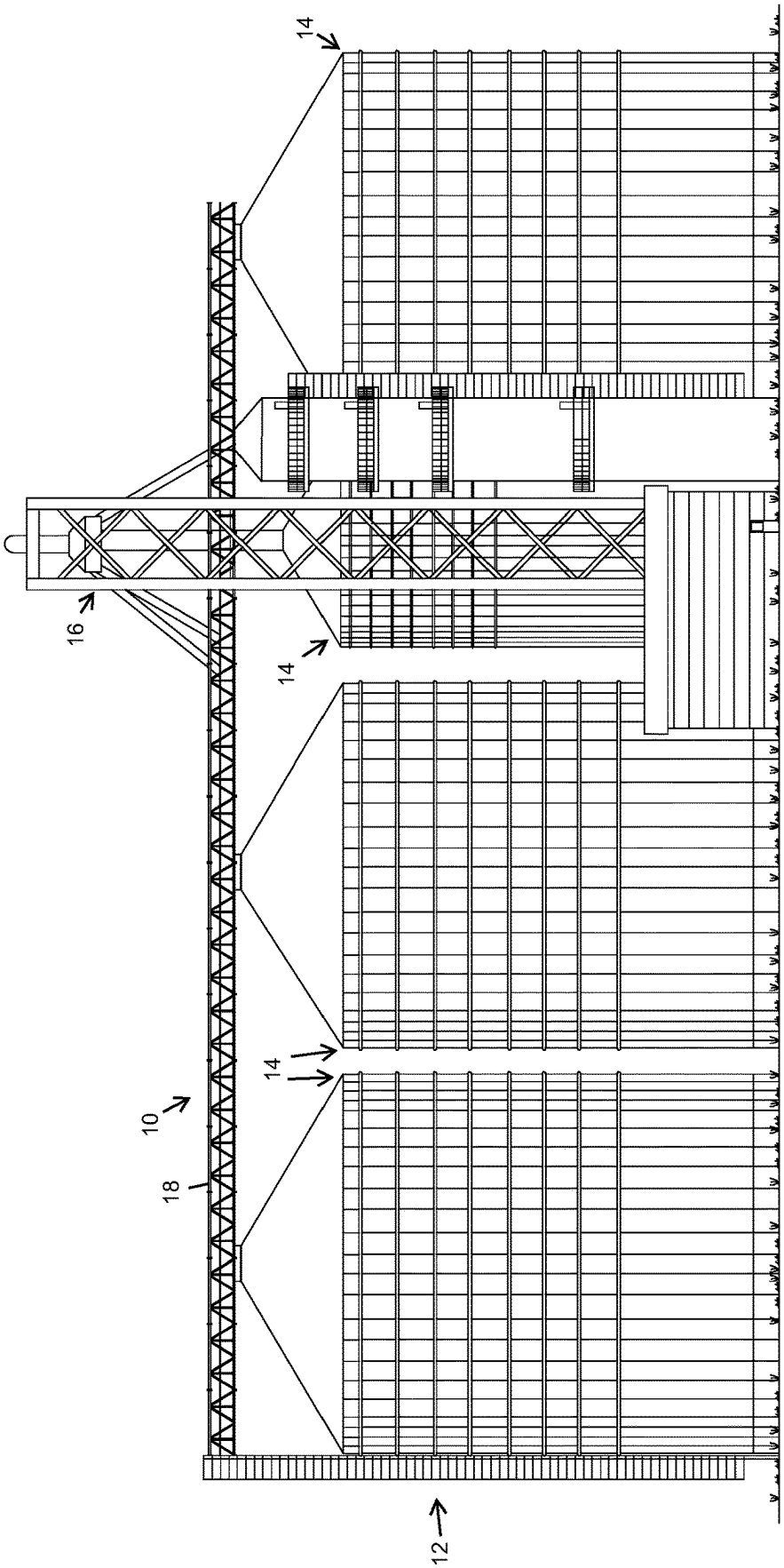

FIG. 1

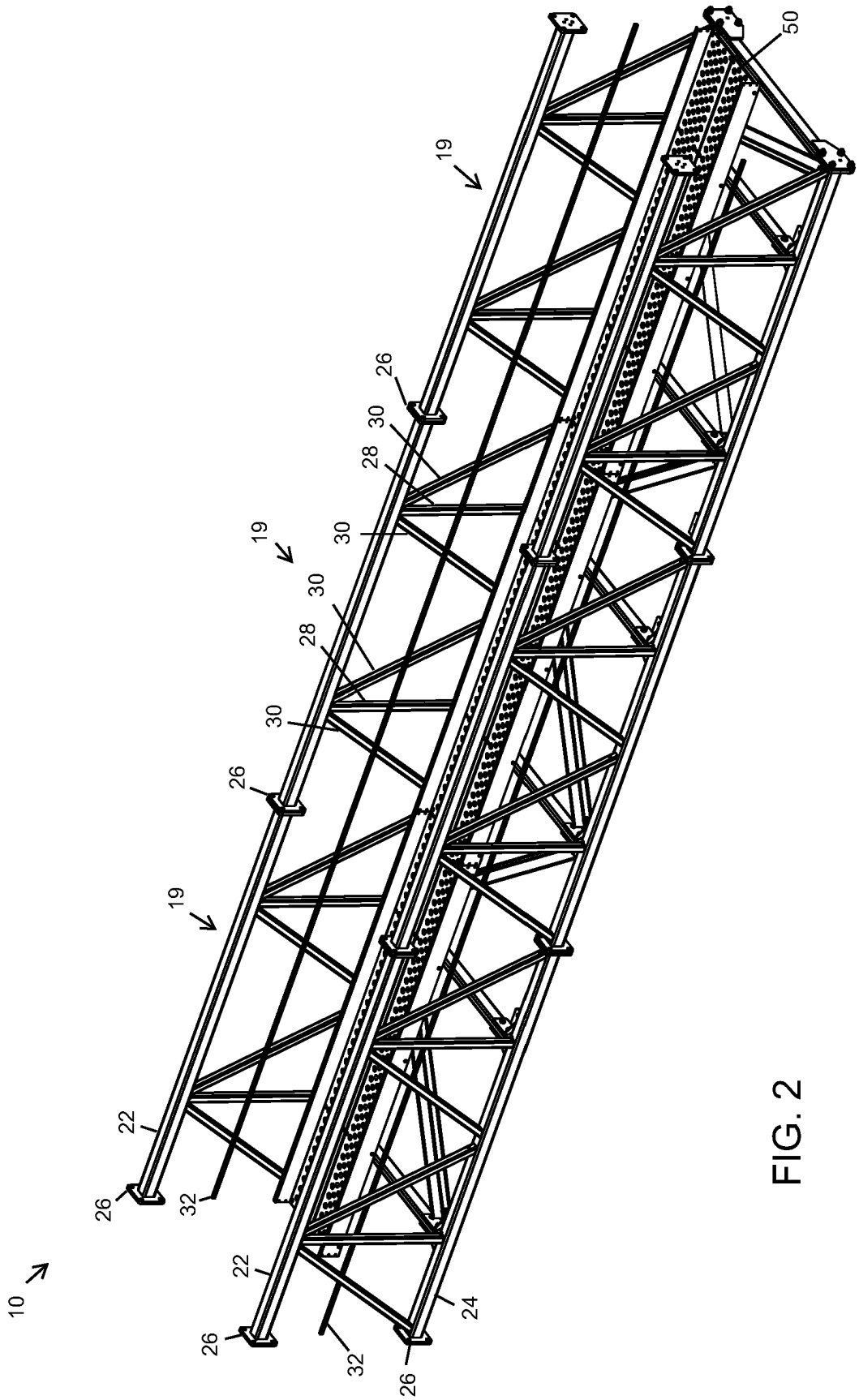

FIG. 2

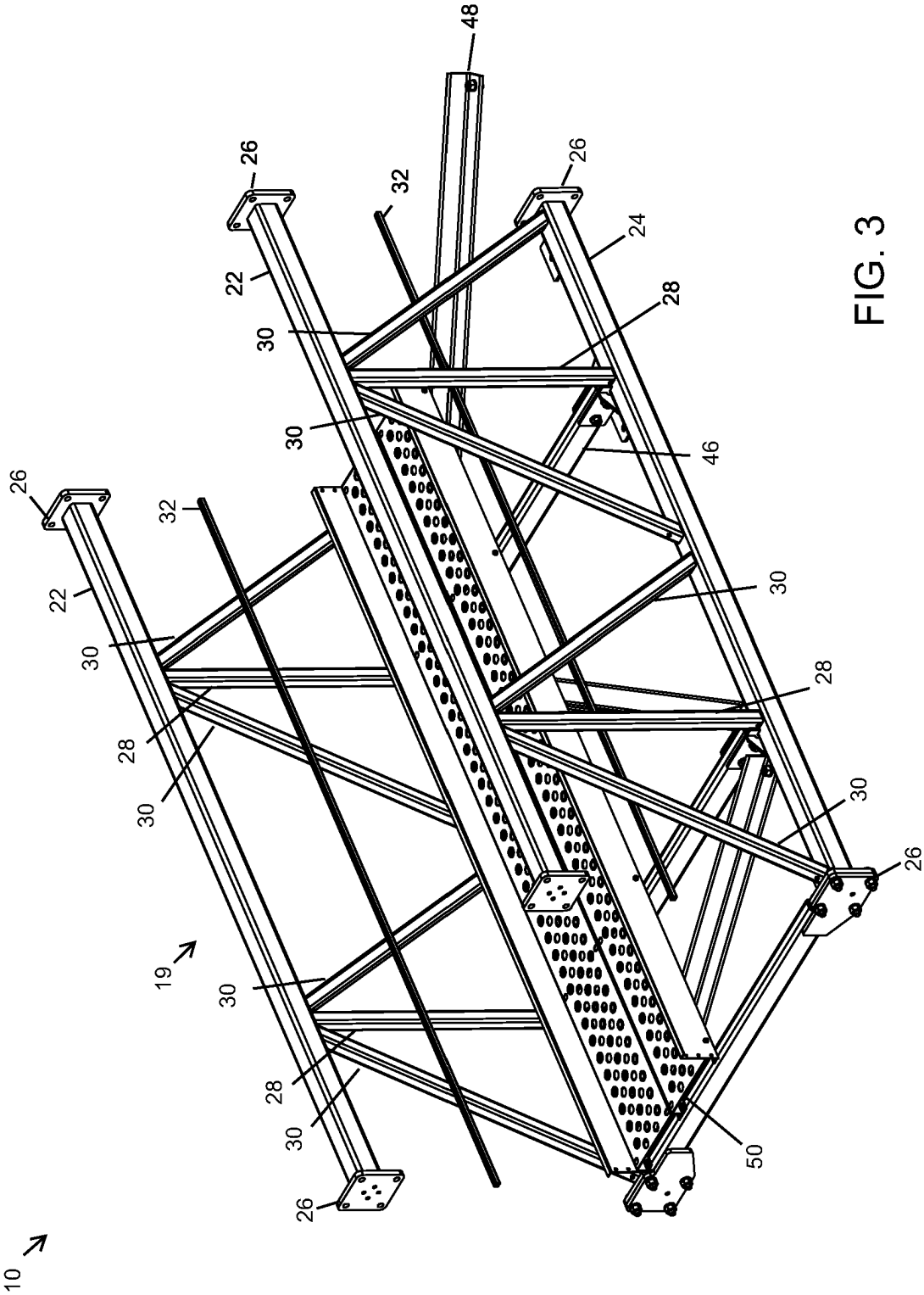

FIG. 3

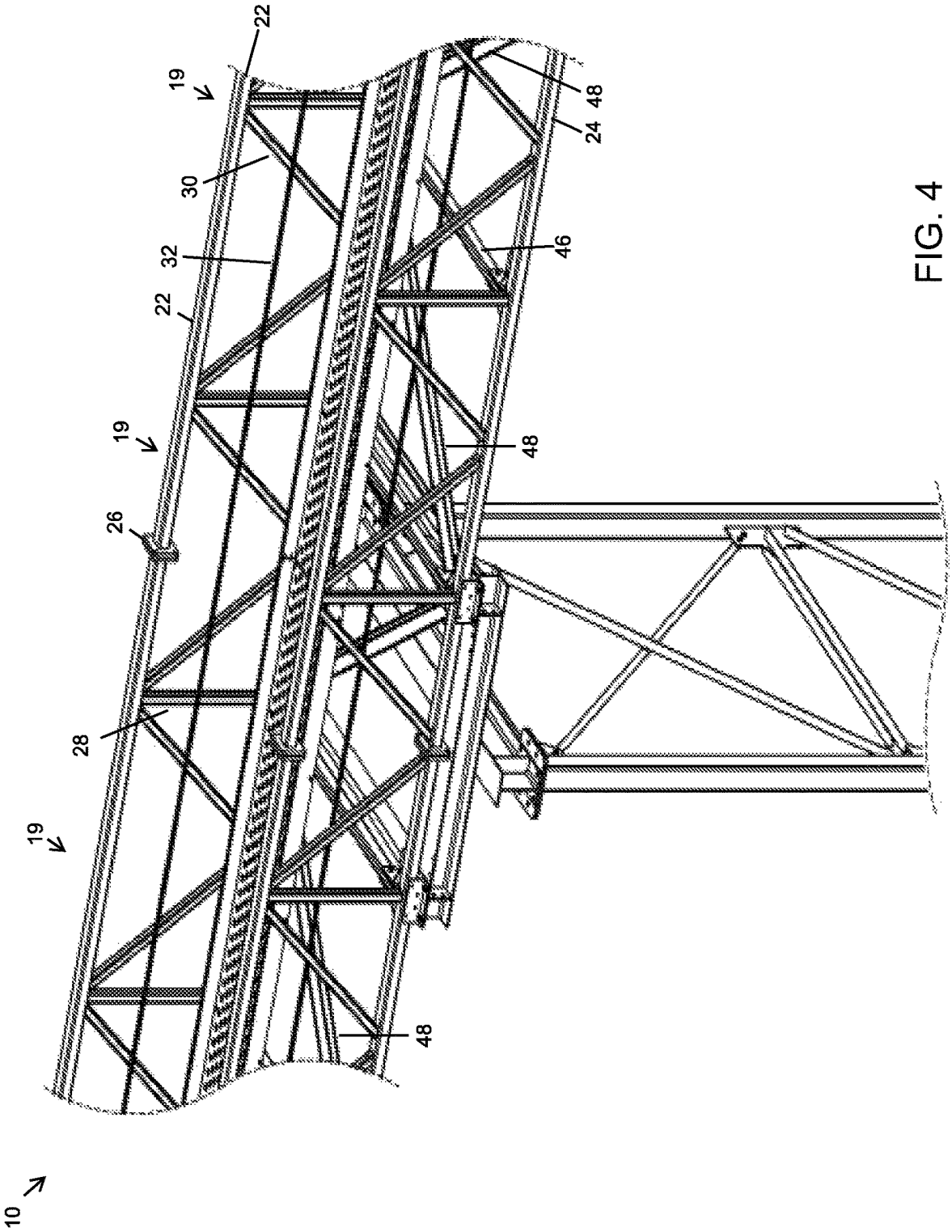

FIG. 4

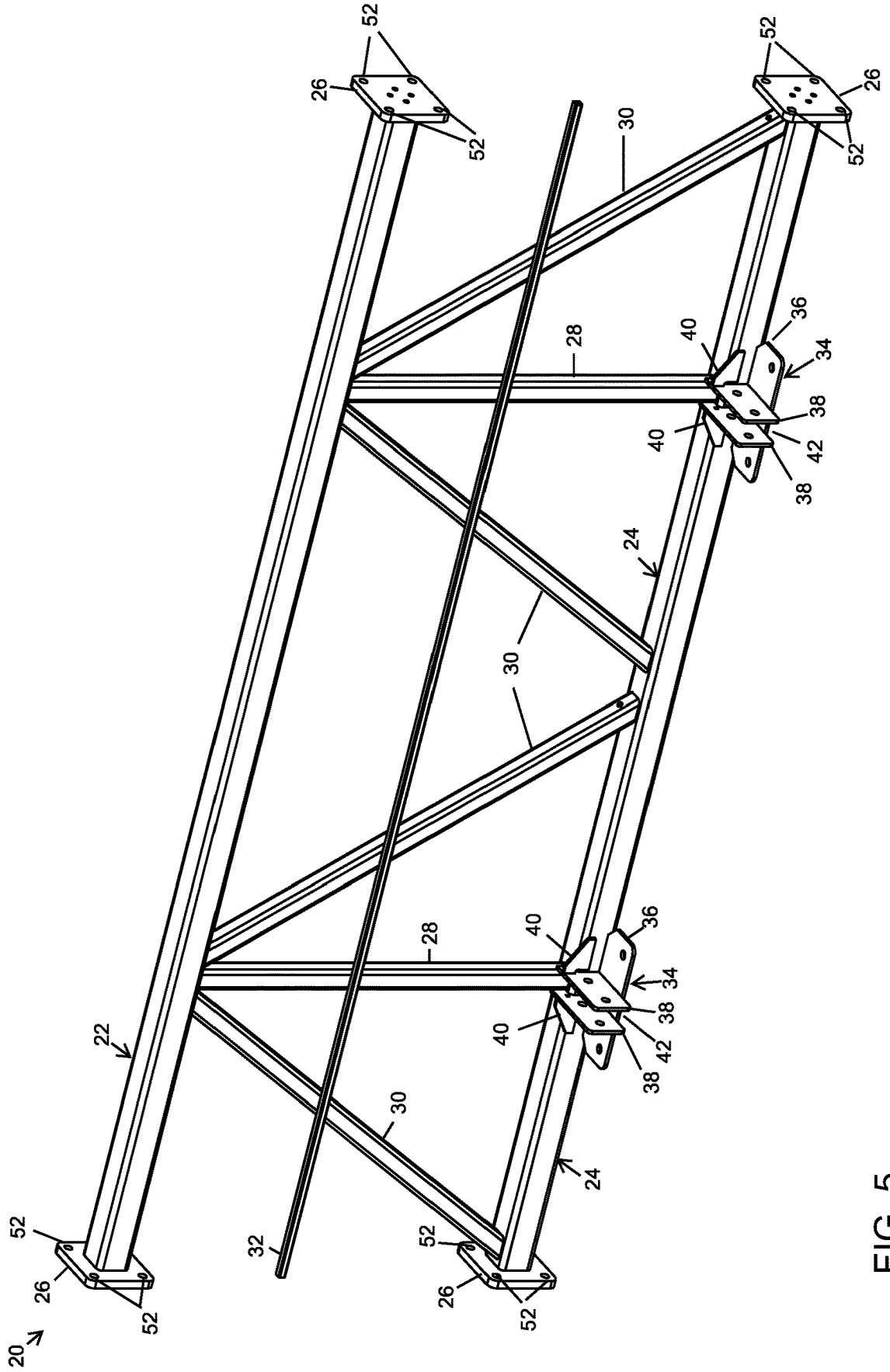

FIG. 5

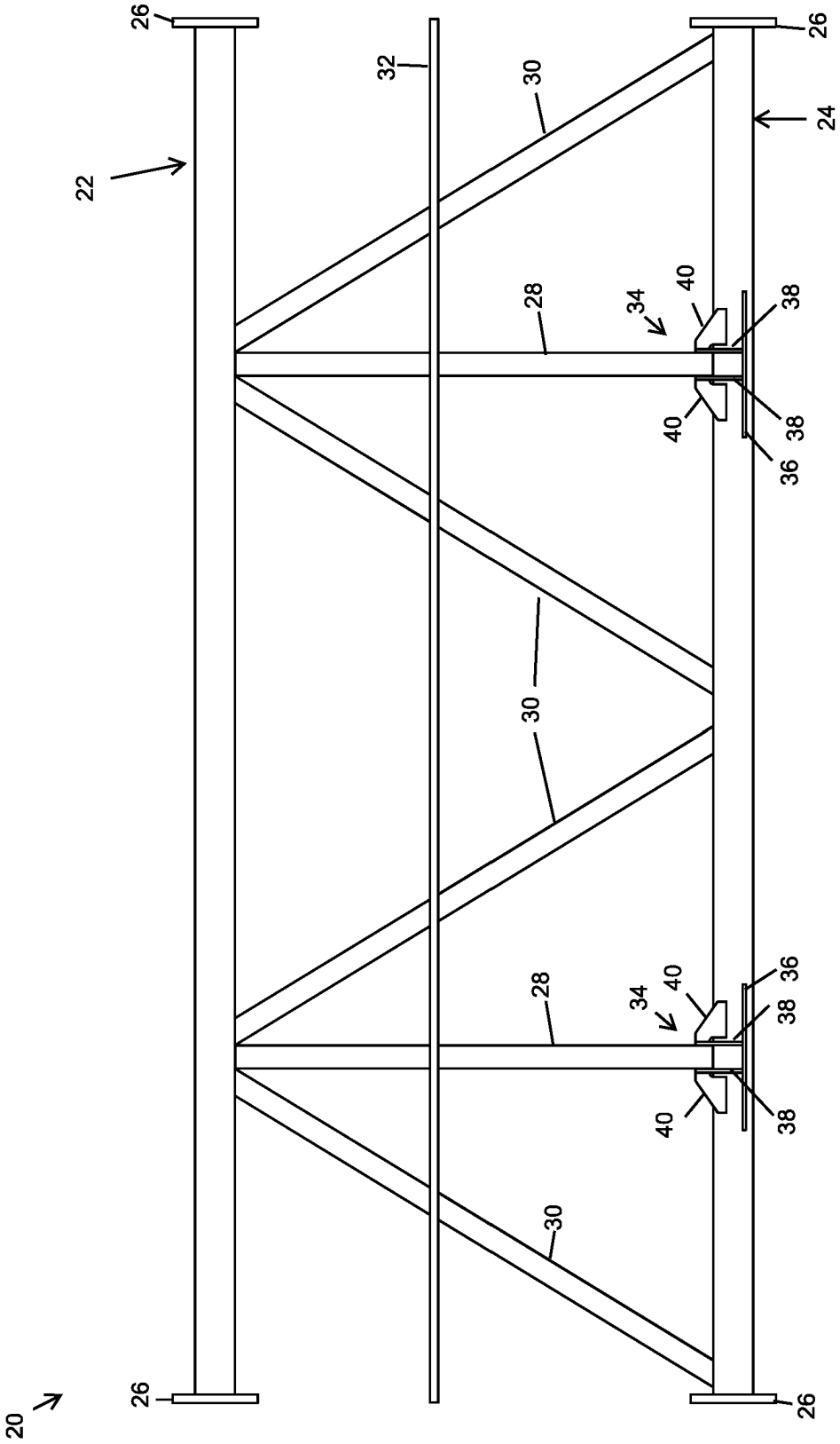
20
22
24
26
26
26
26
28
28
30
30
30
32
34
34
36
36
38
38
38
38
40
40
40
40

FIG. 6

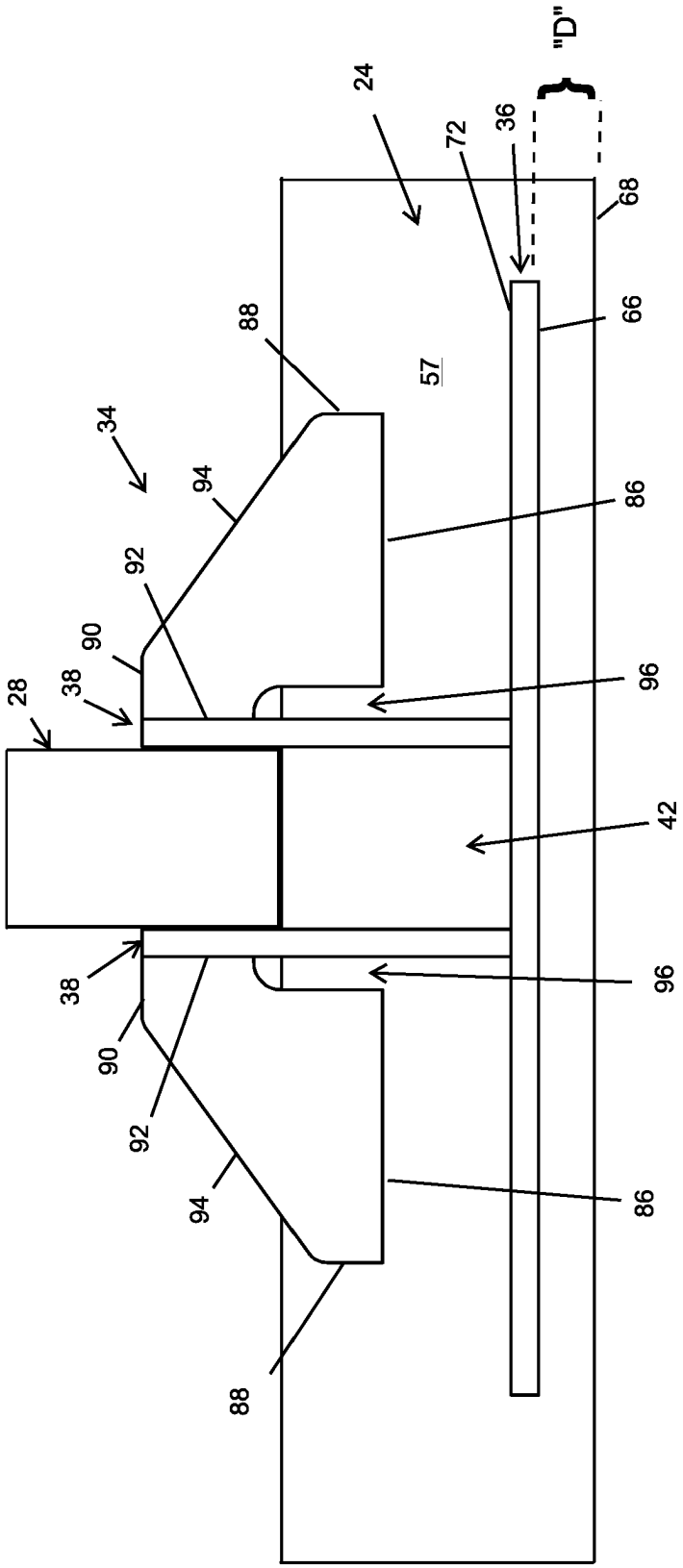

FIG. 7

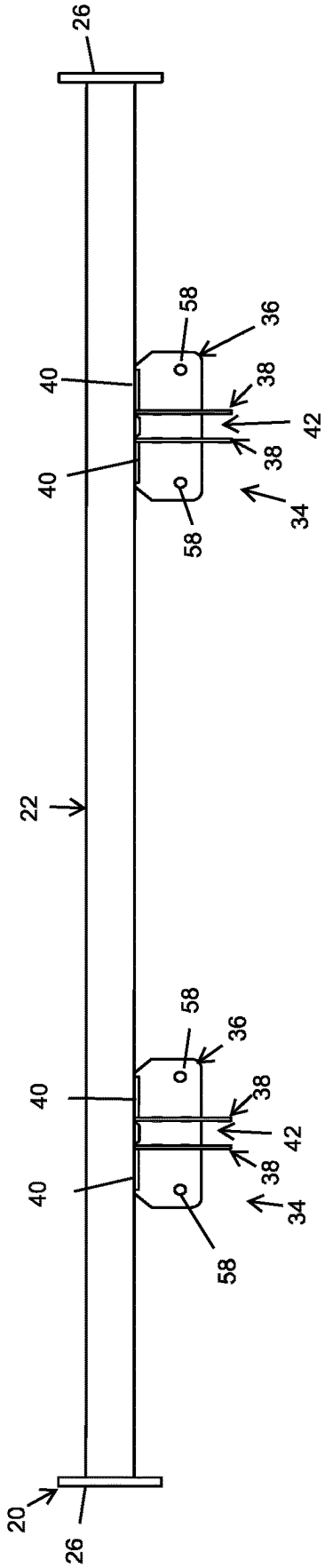

FIG. 8

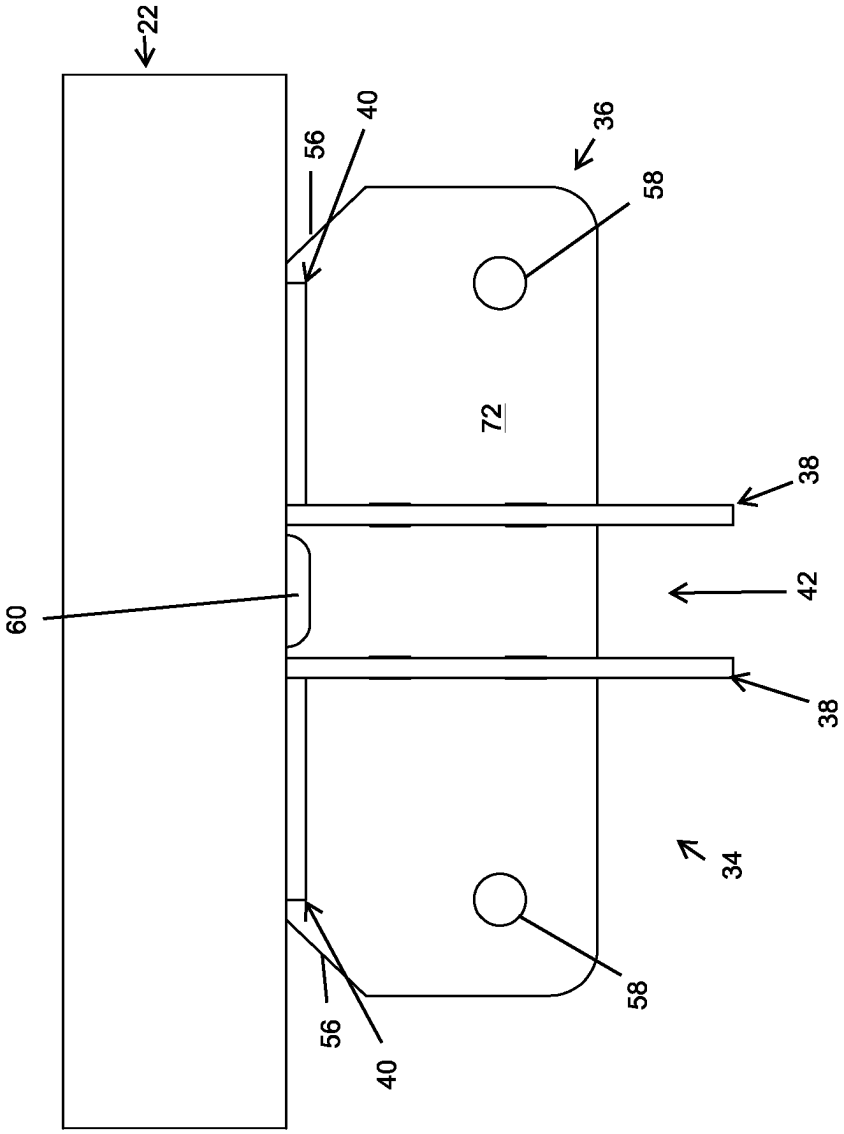

FIG. 9

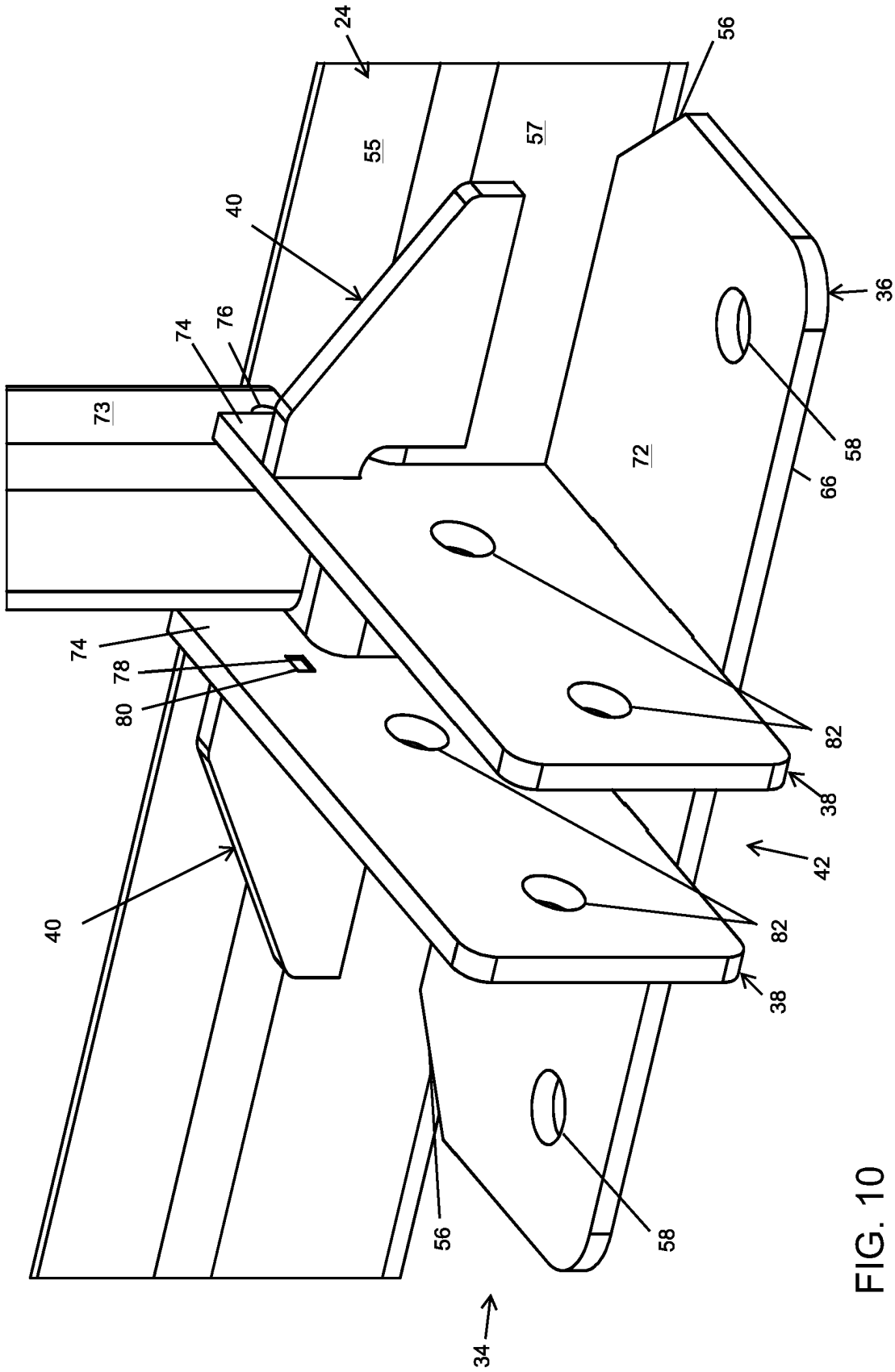

FIG. 10

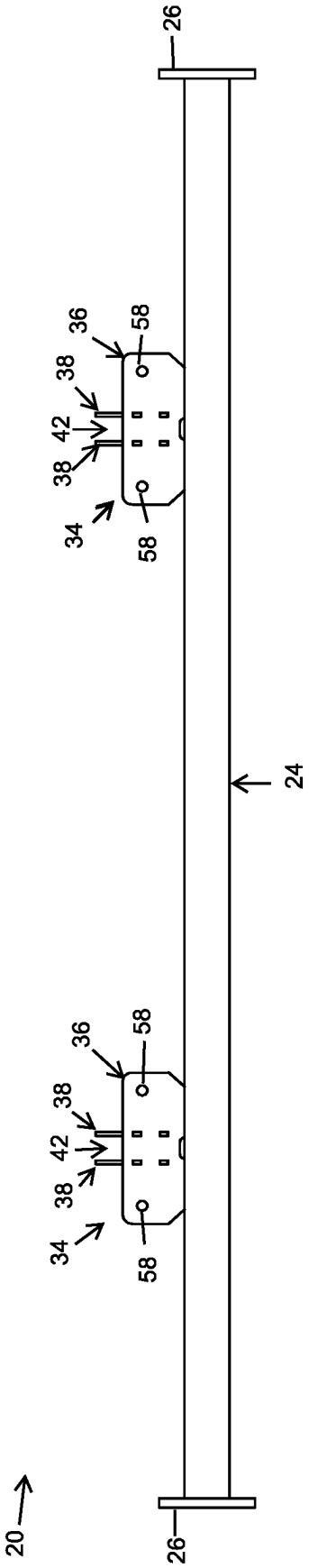

FIG. 11

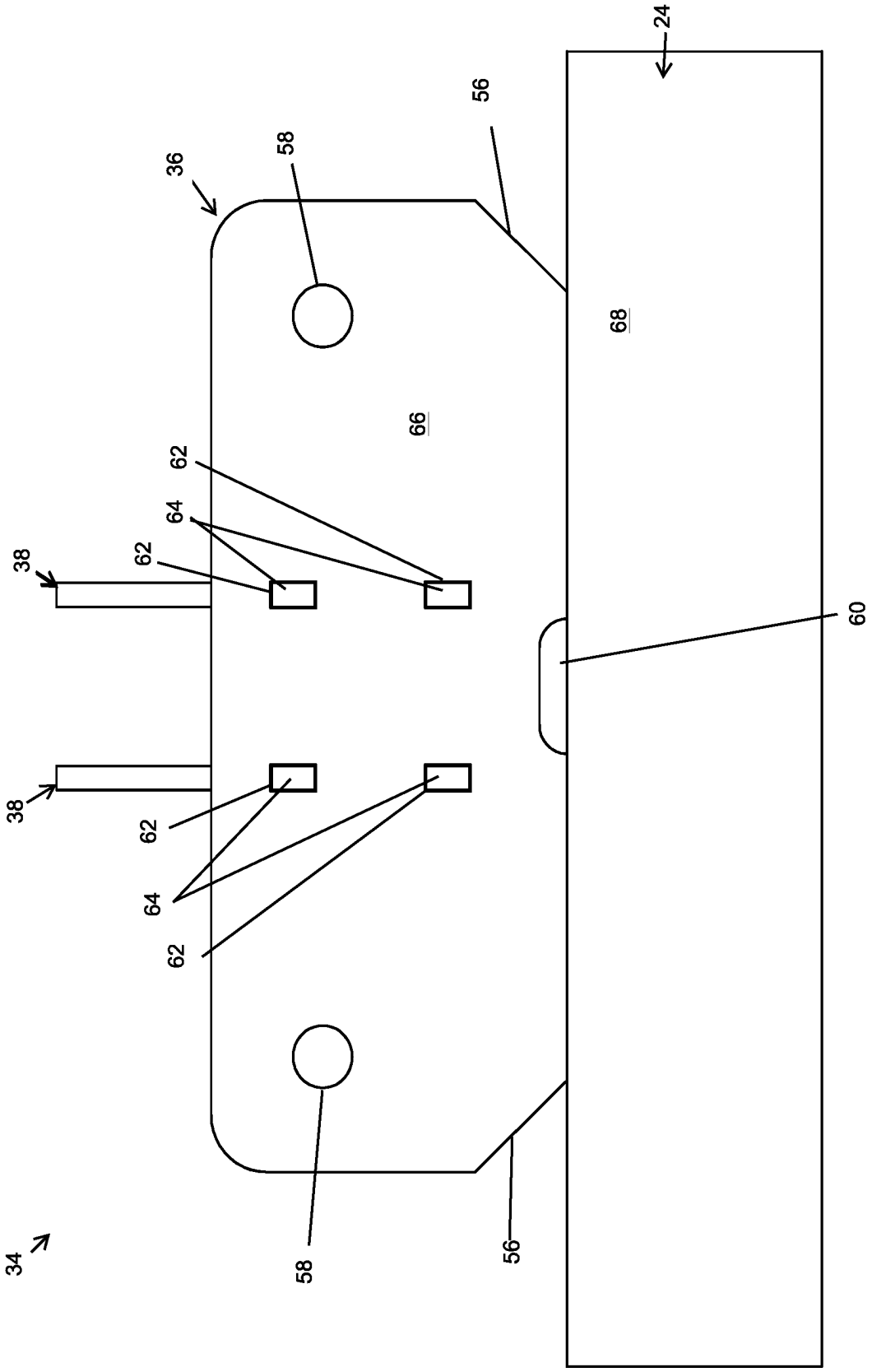

FIG. 12

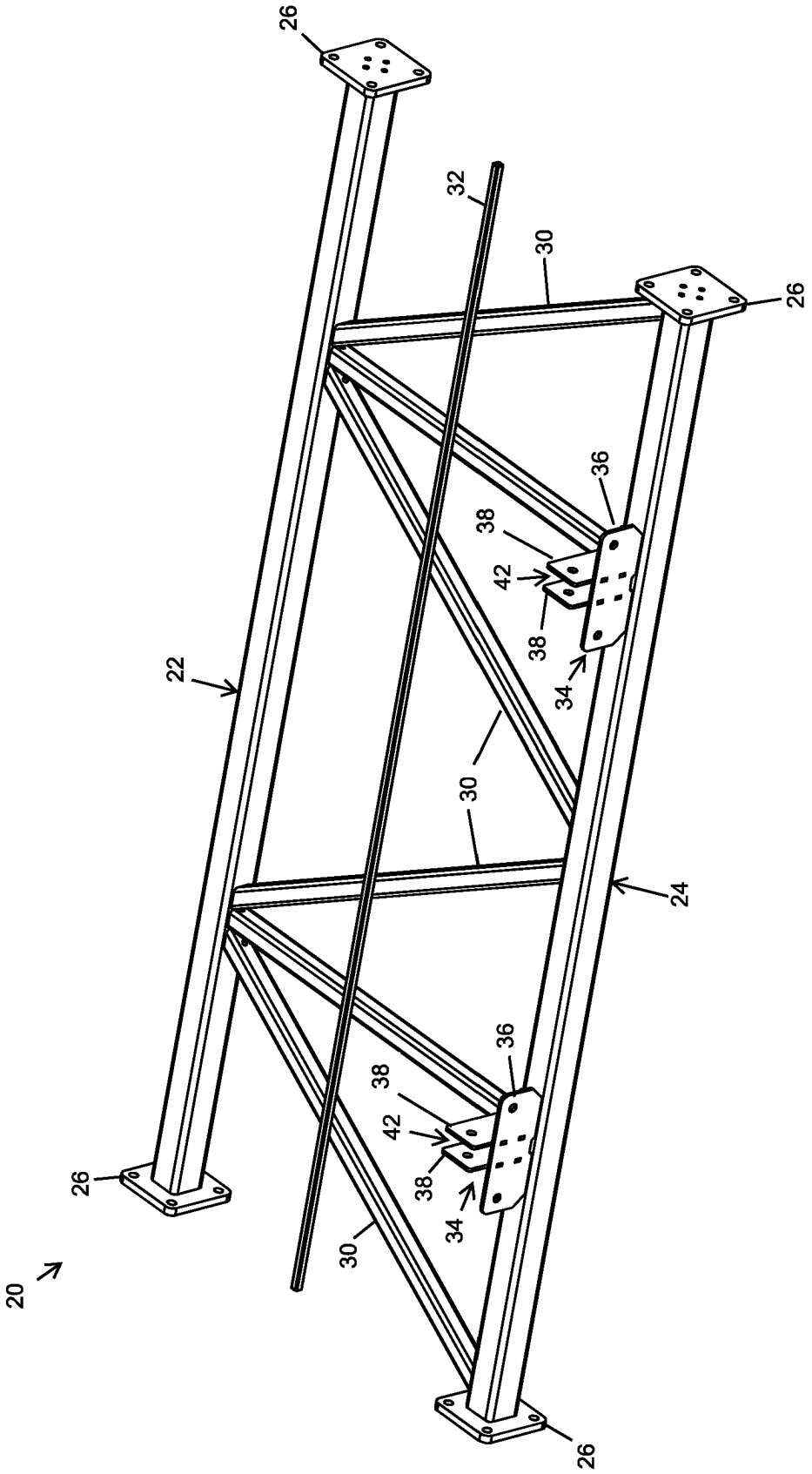

FIG. 13

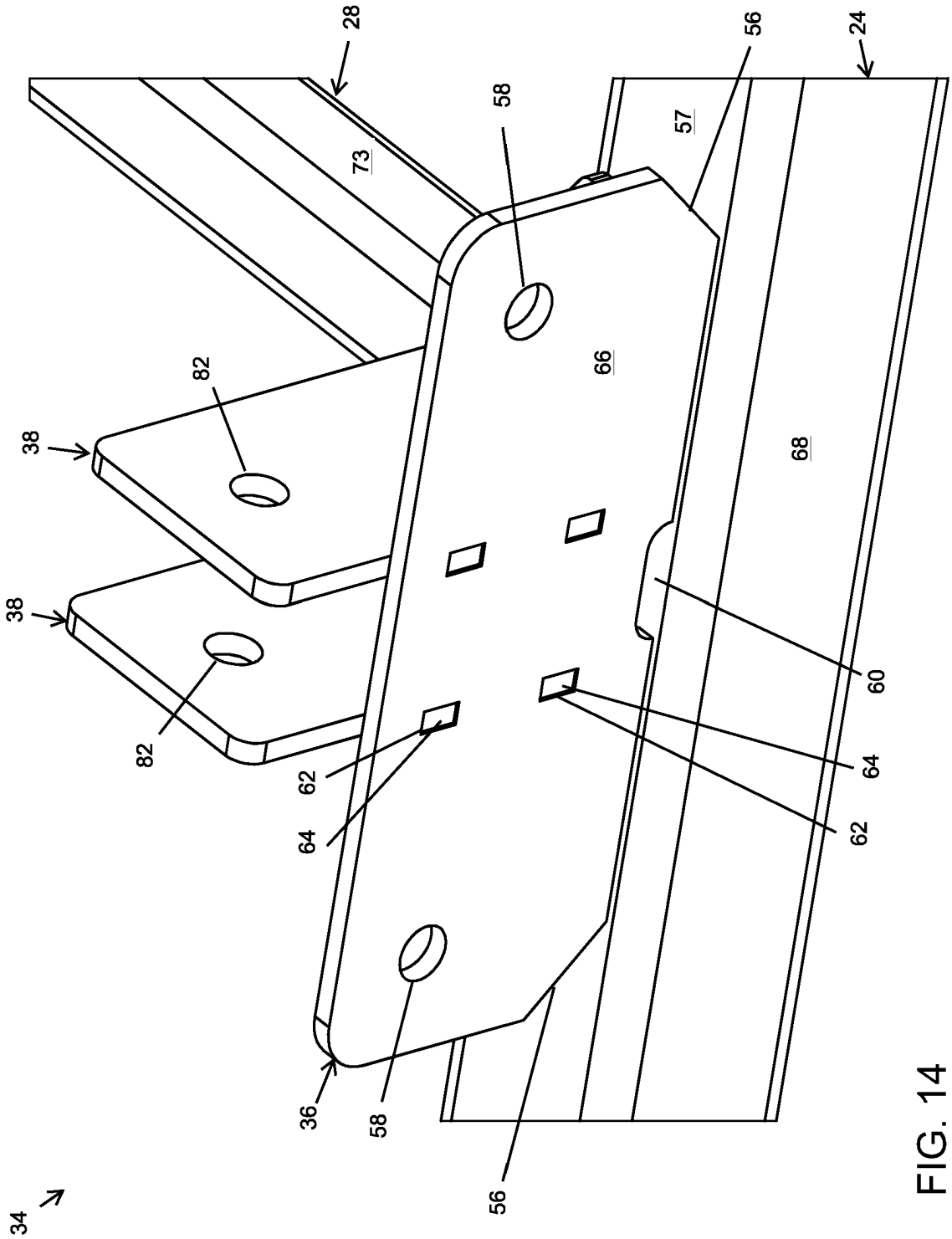

FIG. 14

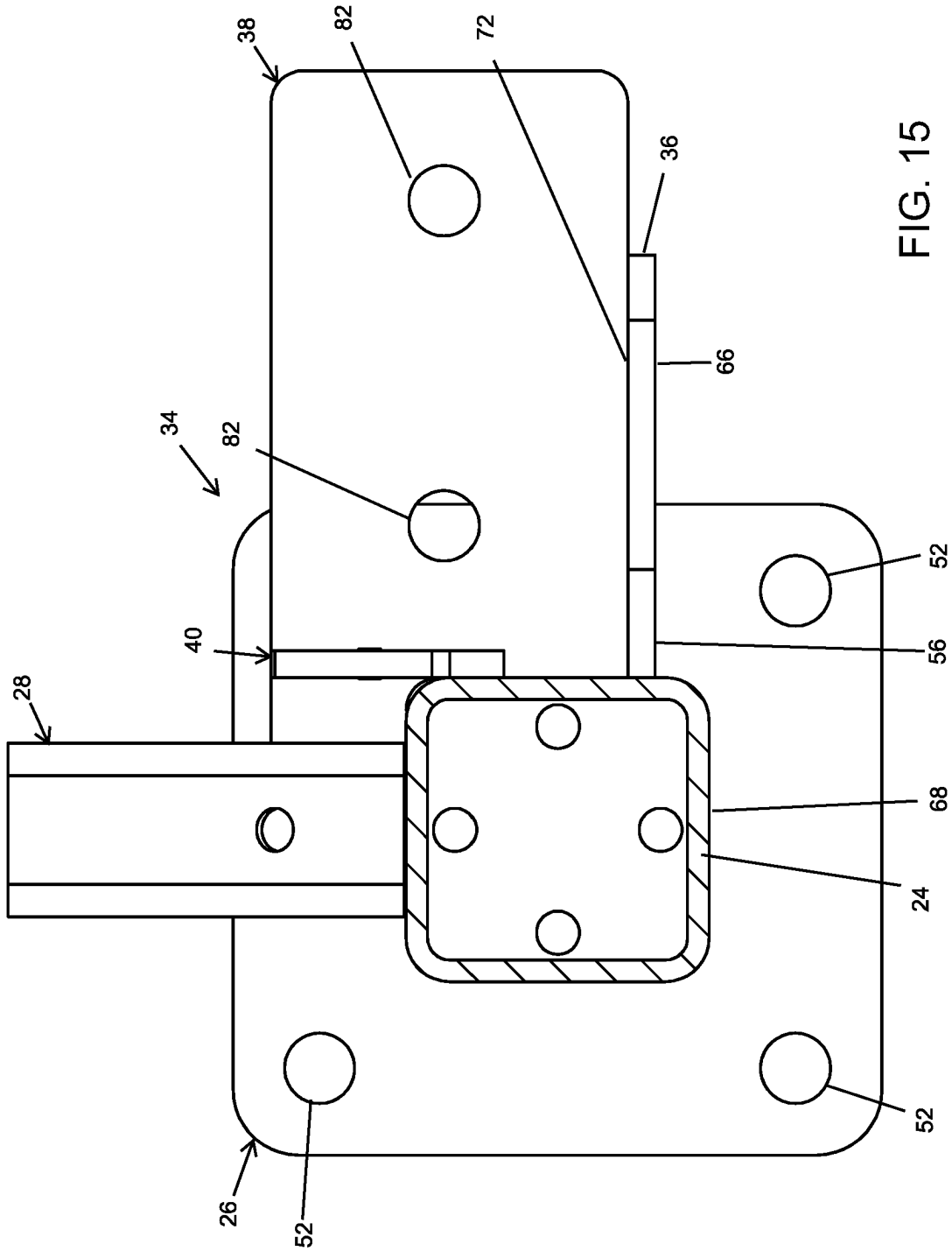

FIG. 15

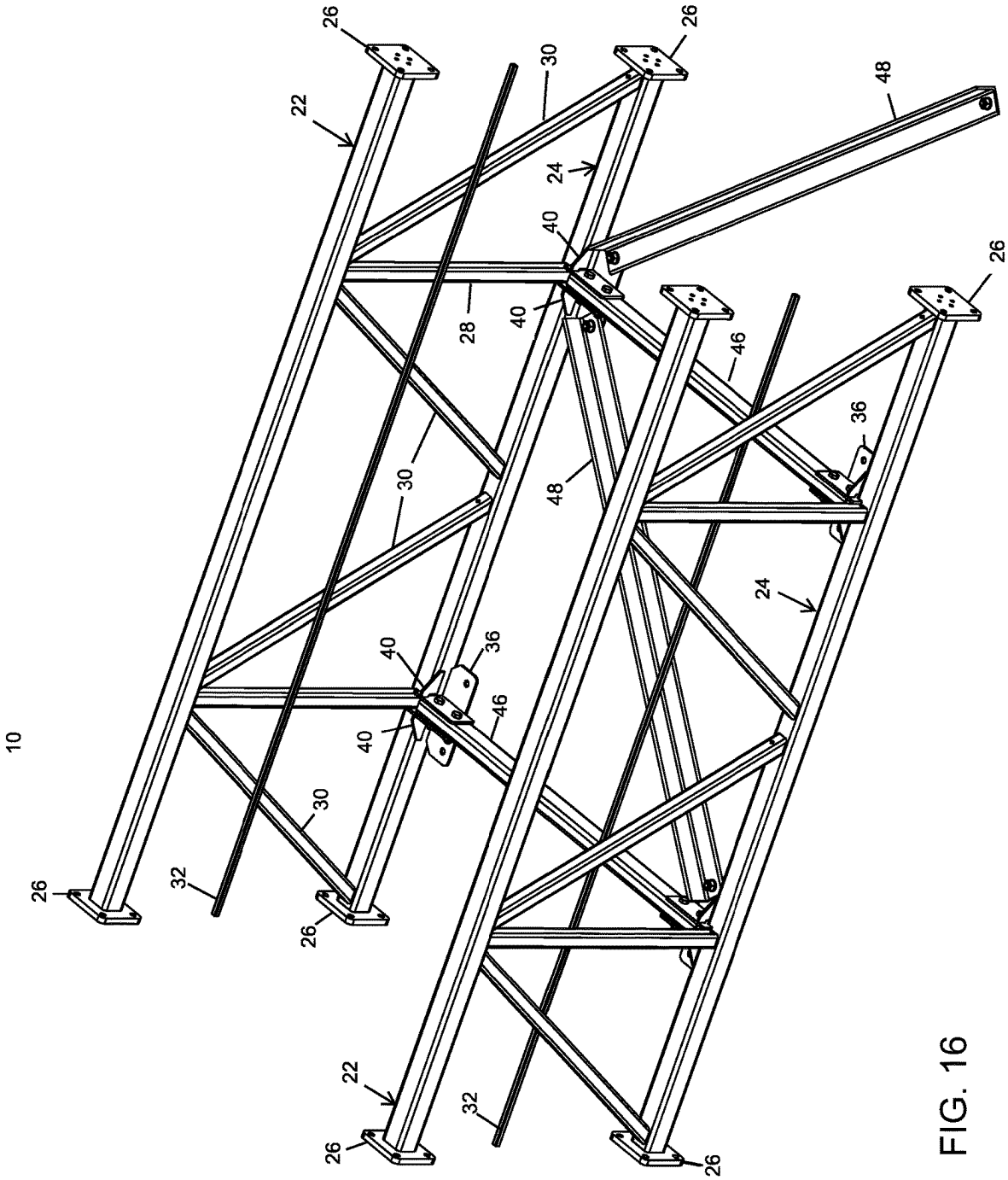

FIG. 16

FIG. 17

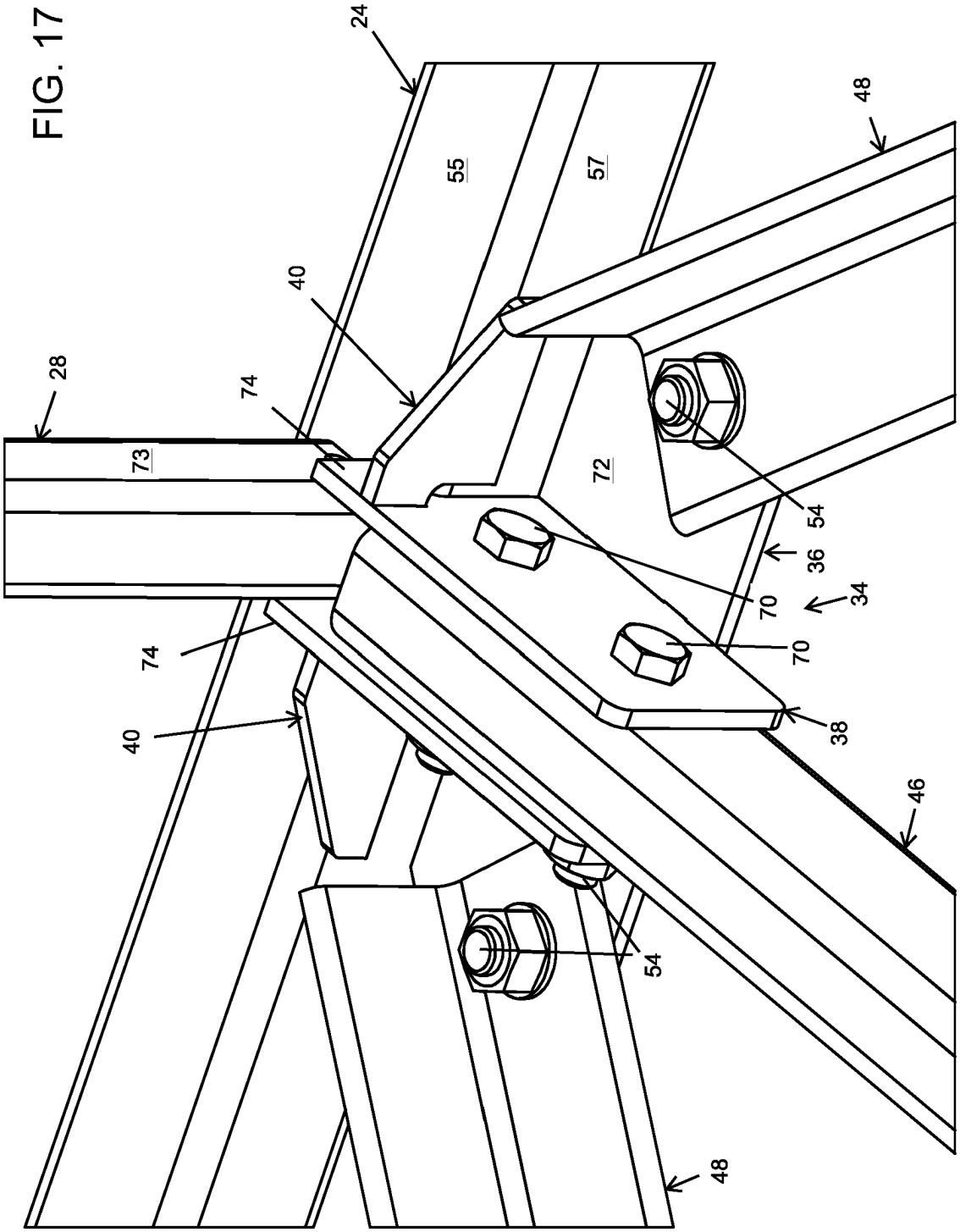

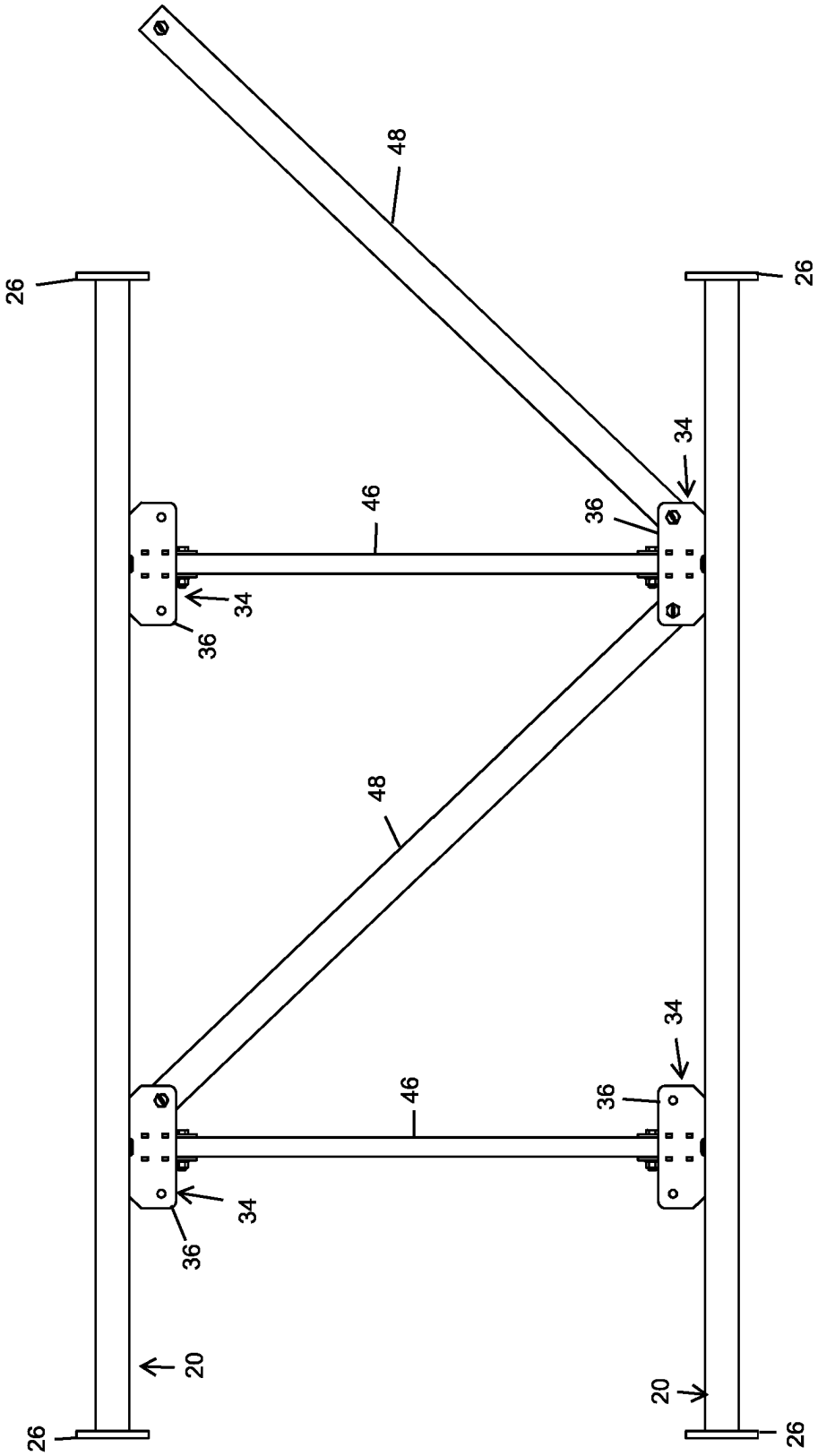

FIG. 18

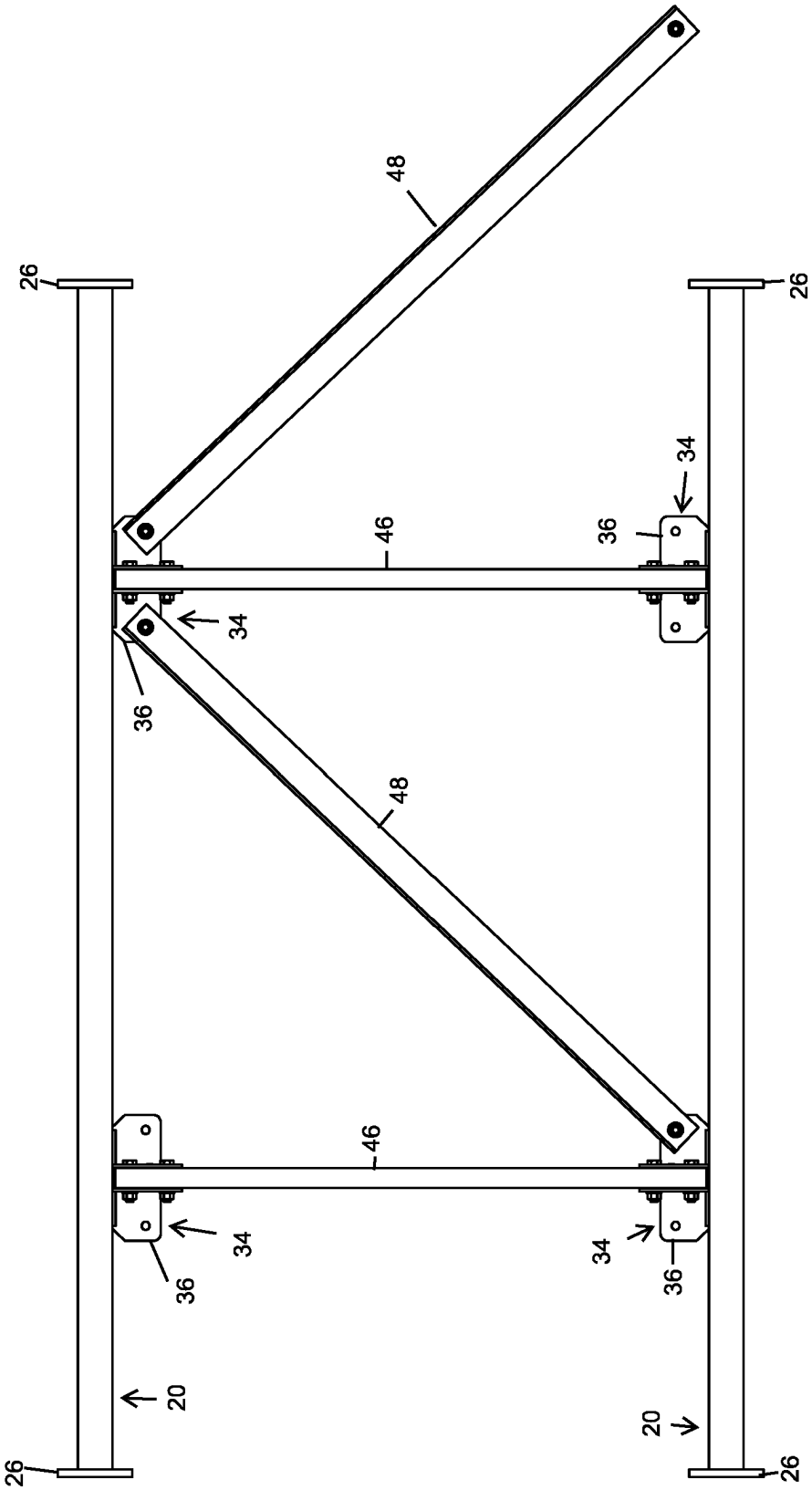

FIG. 19

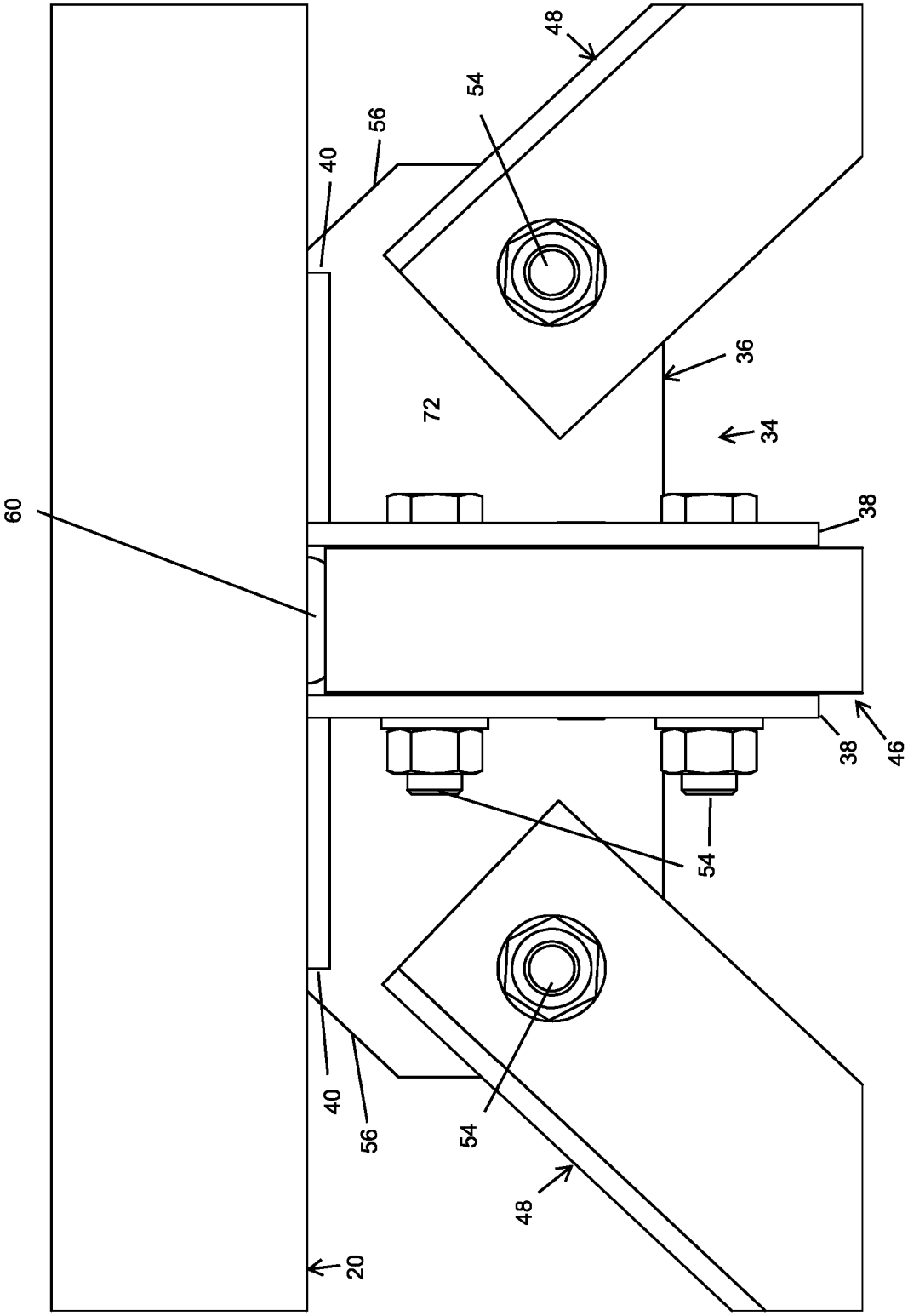

FIG. 20

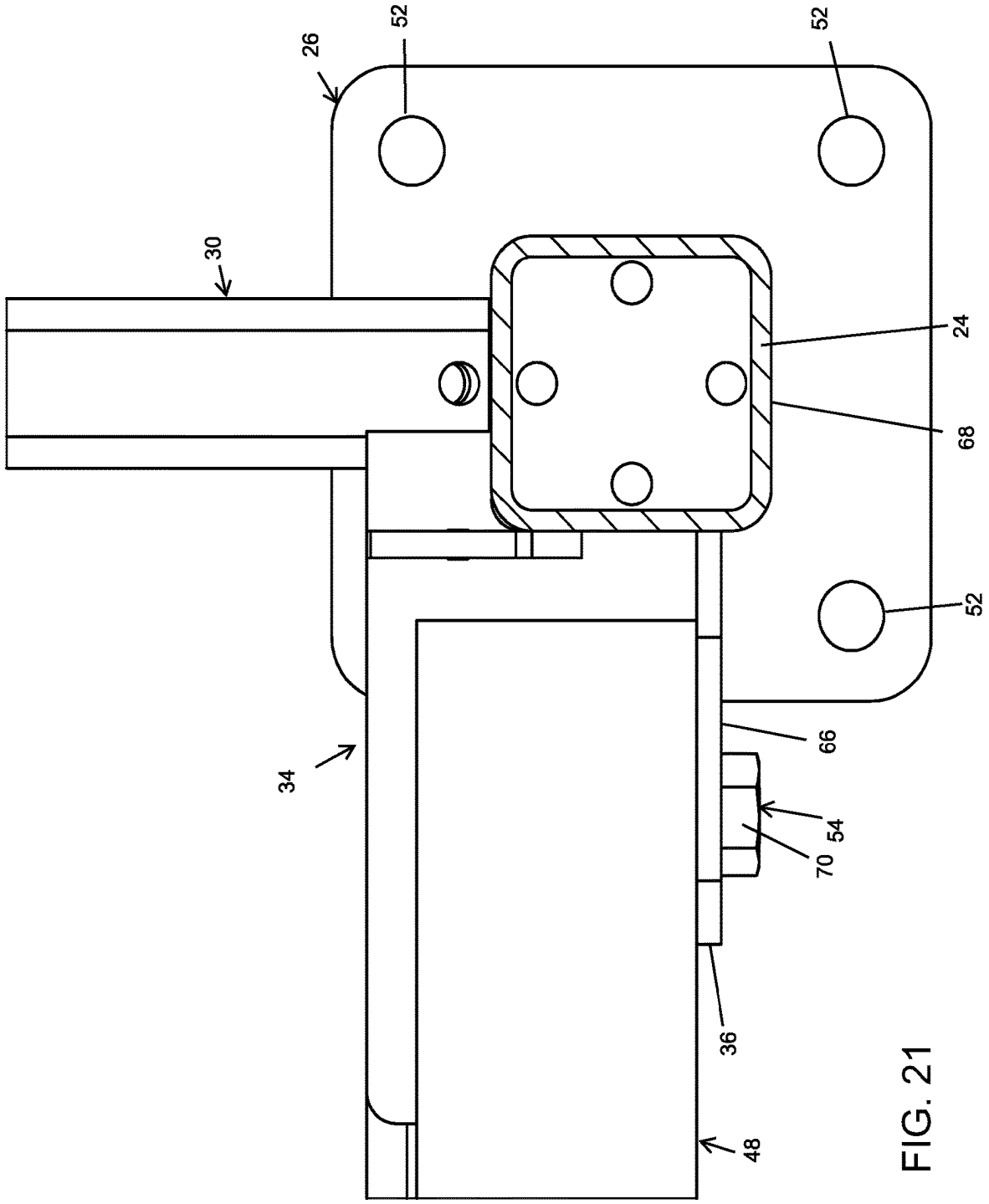

FIG. 21

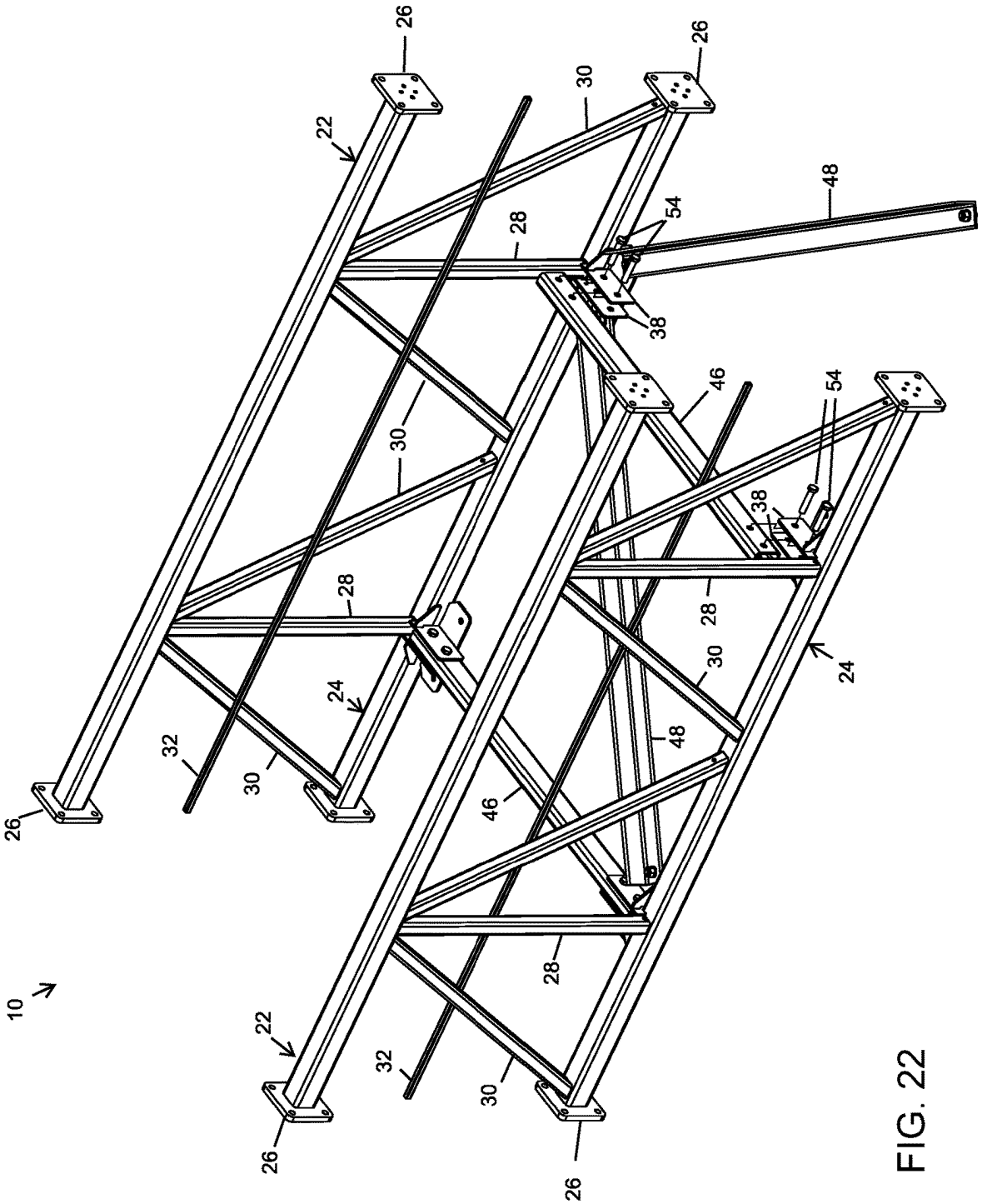

FIG. 22

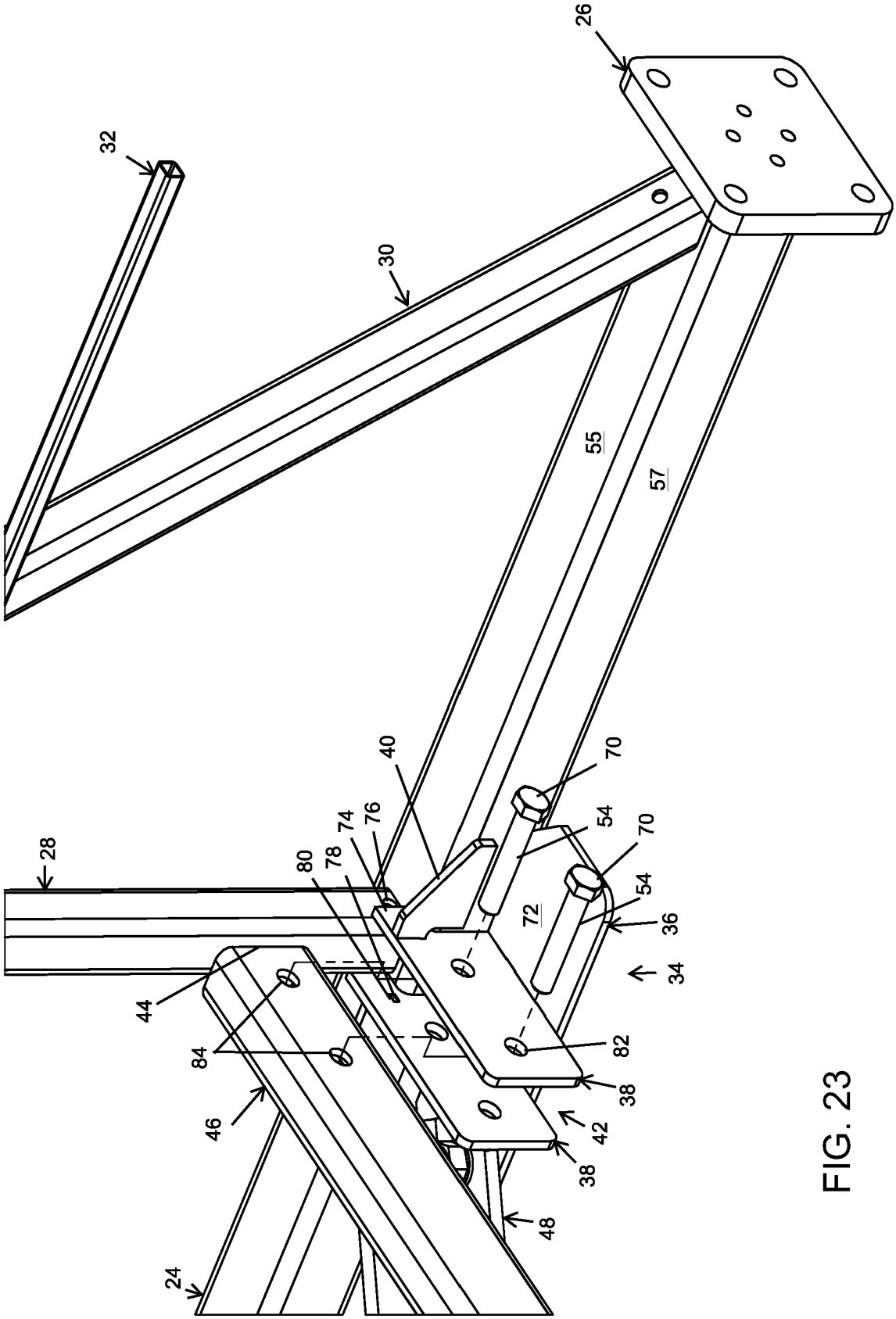
26
32
30
55
57
40
70
54
70
54
72
36
34
28
80
78
74
76
44
84
82
38
42
38
46
48
24

FIG. 23

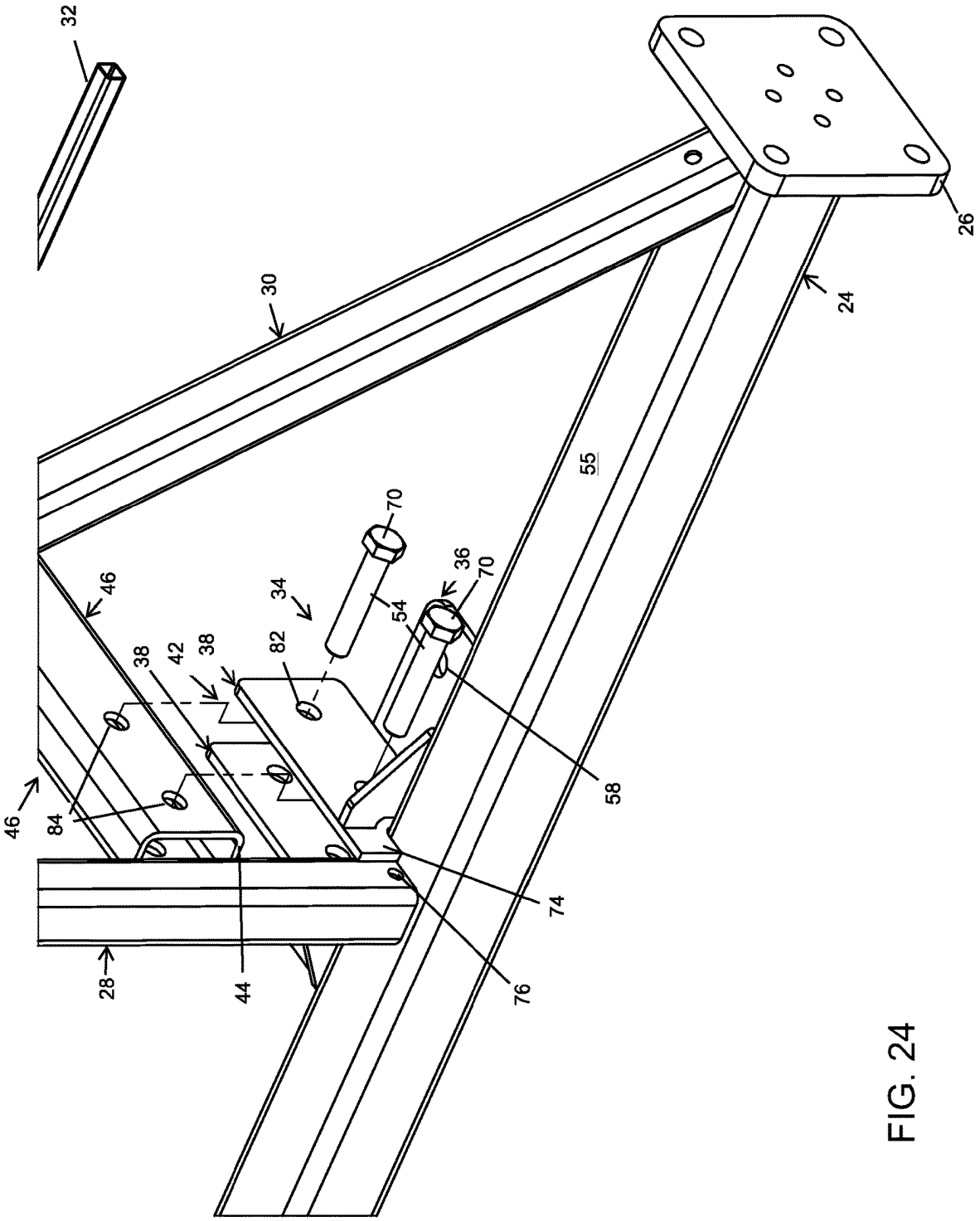

FIG. 24

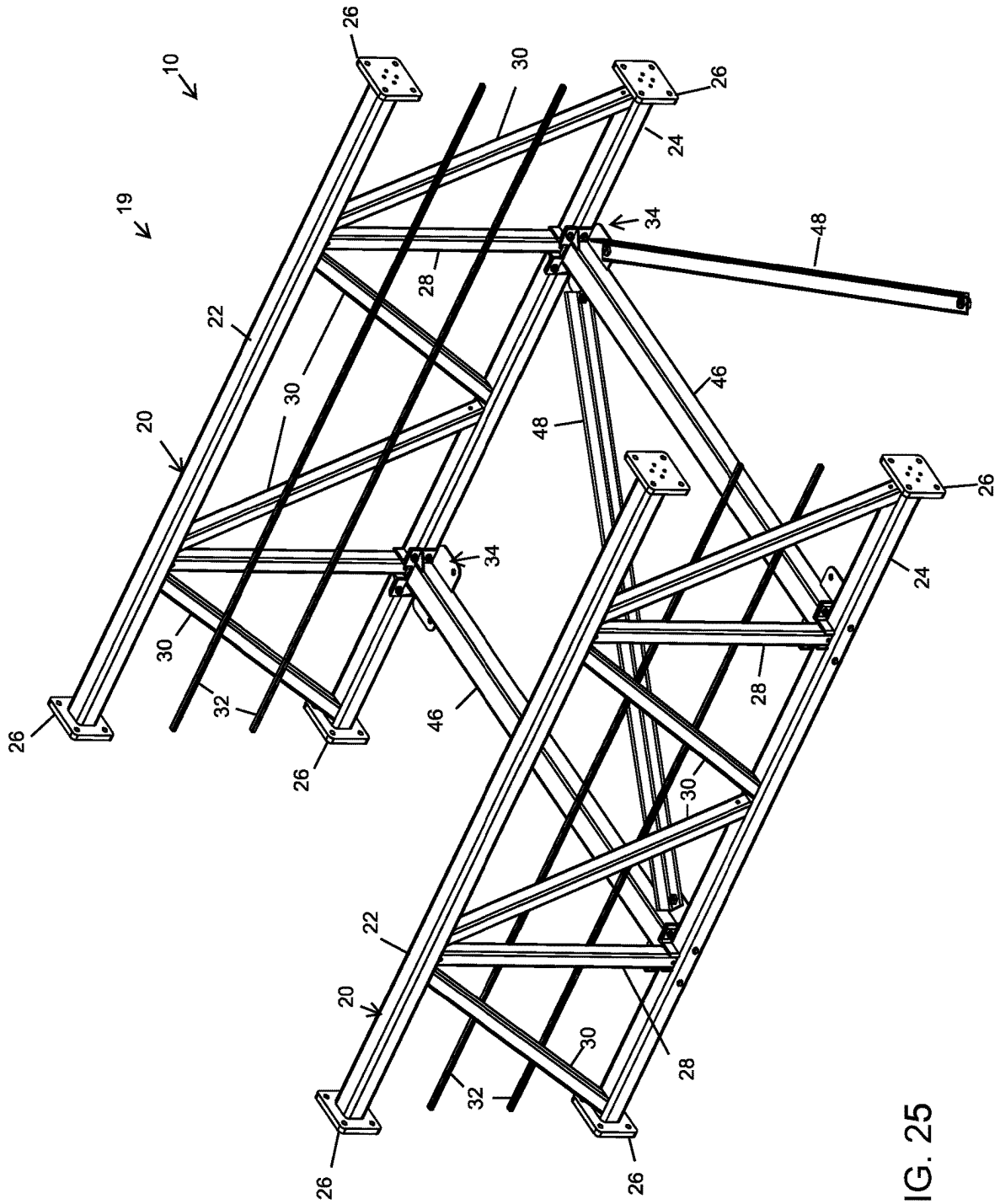

FIG. 25

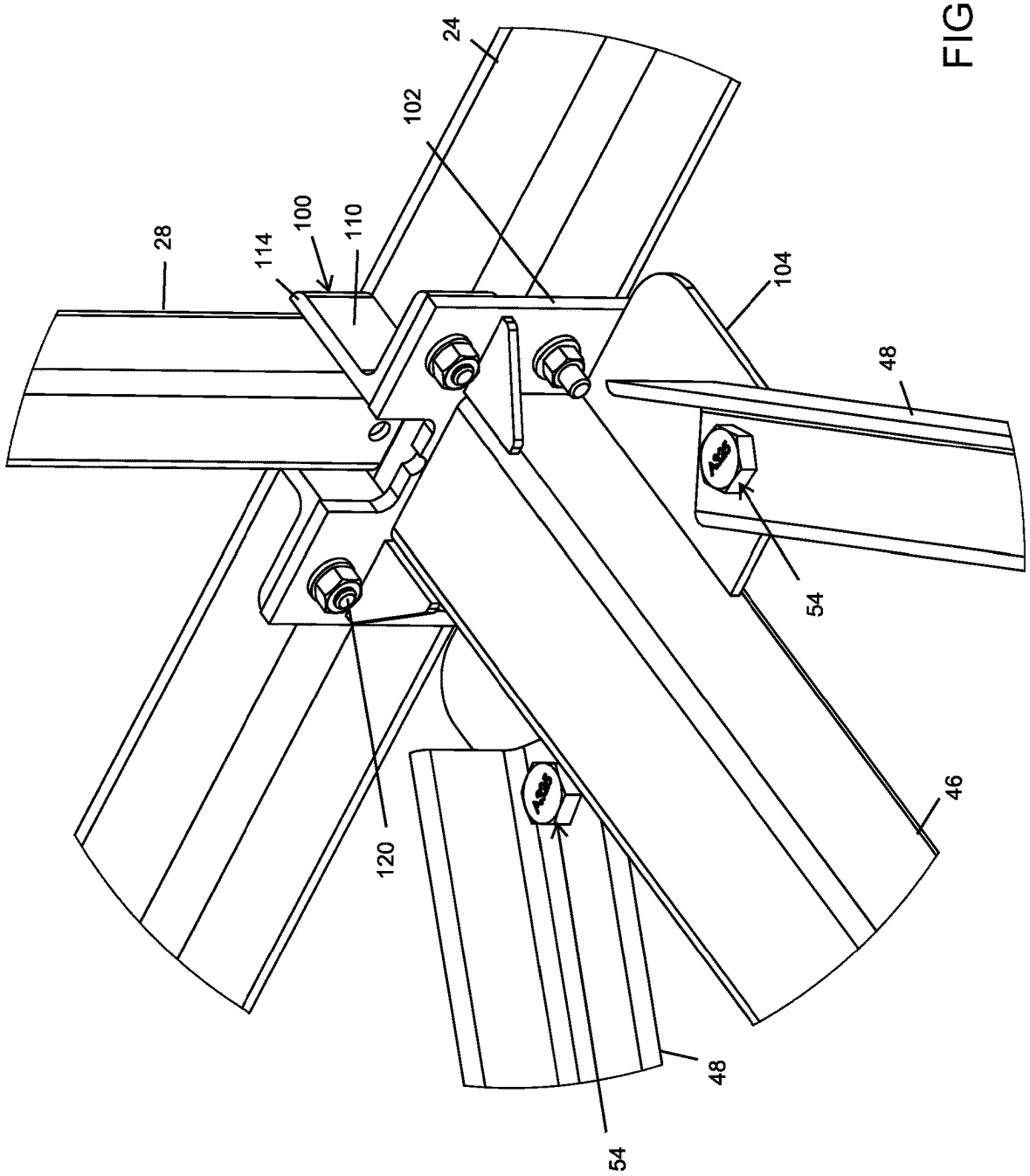

FIG. 26

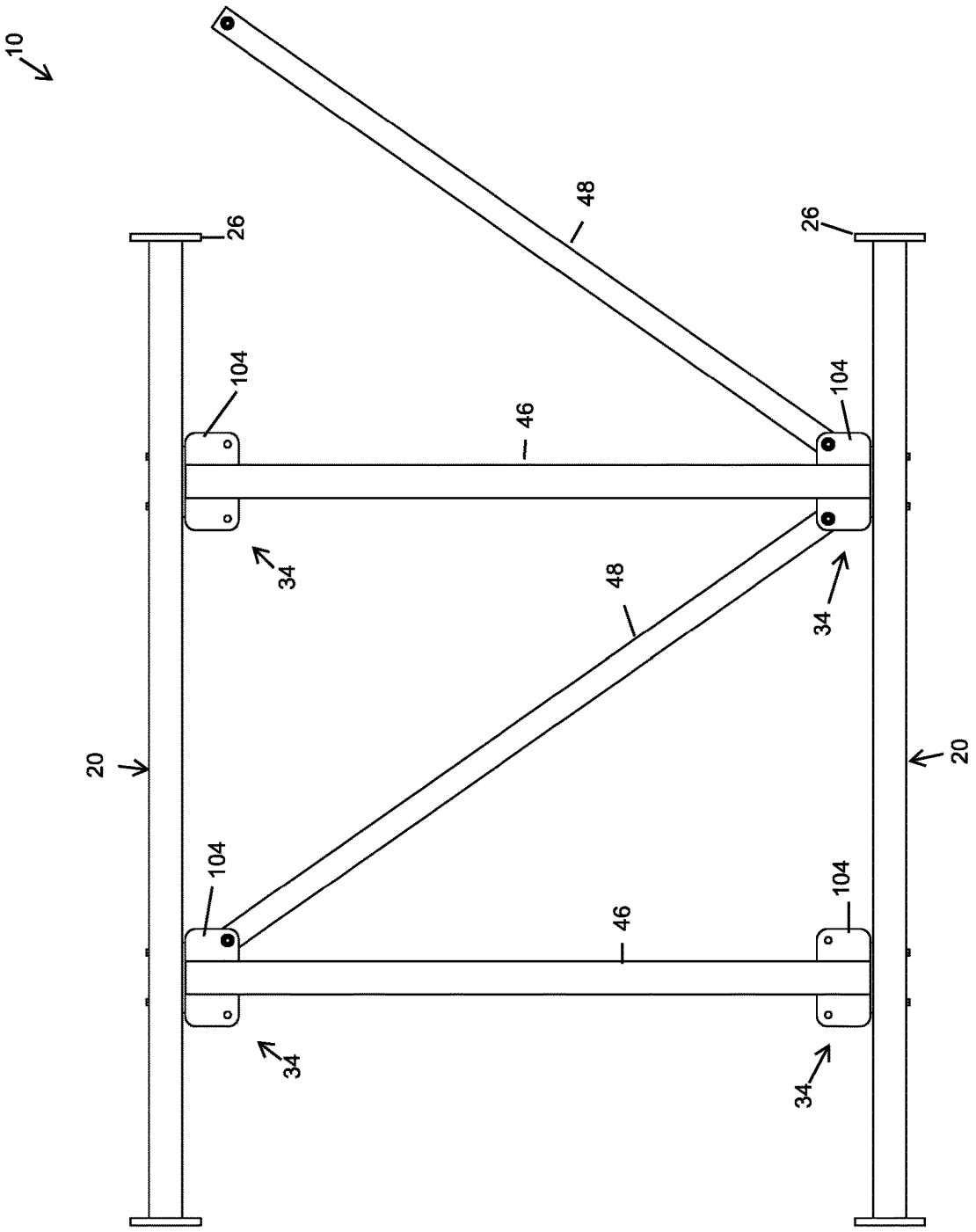

FIG. 27

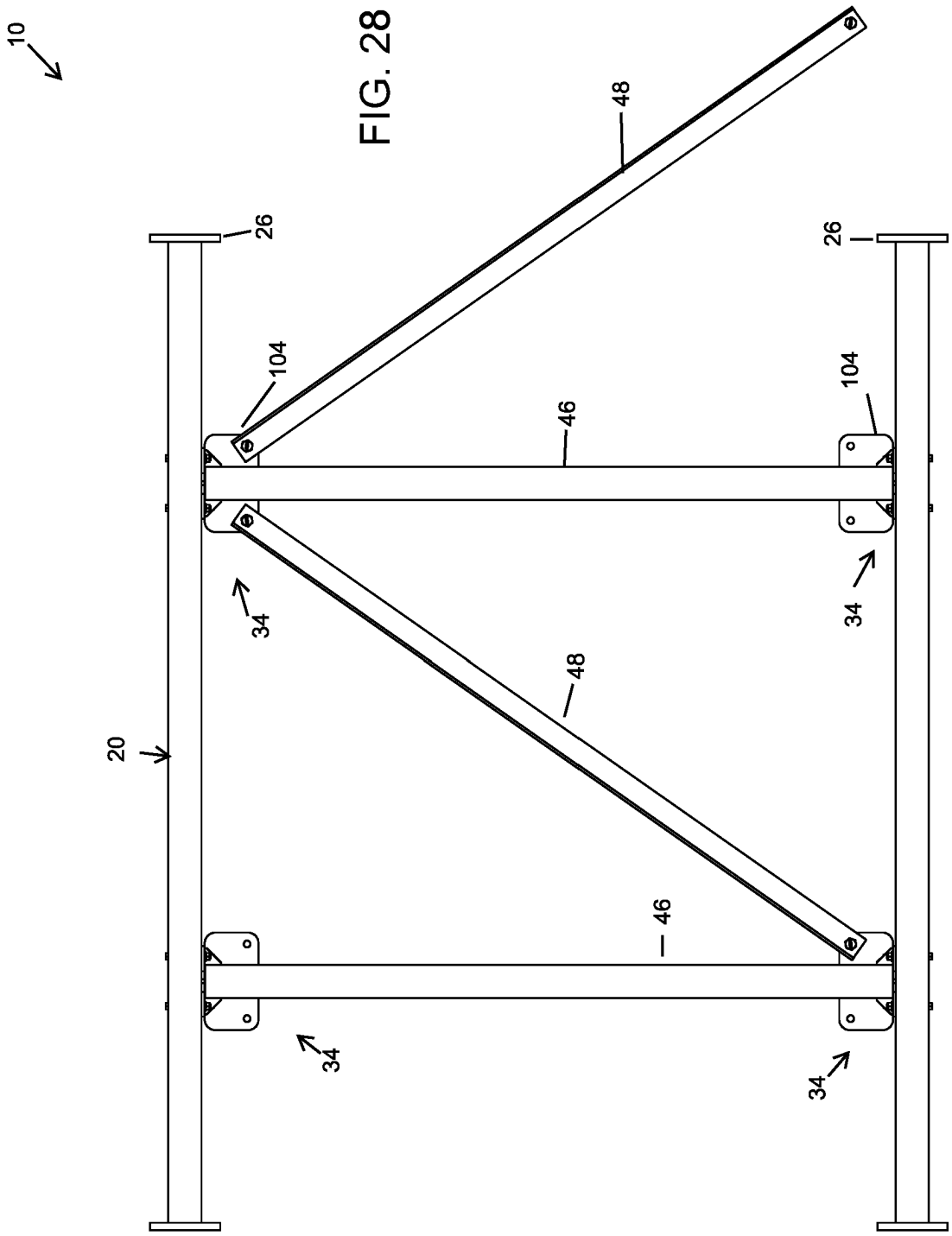

FIG. 28

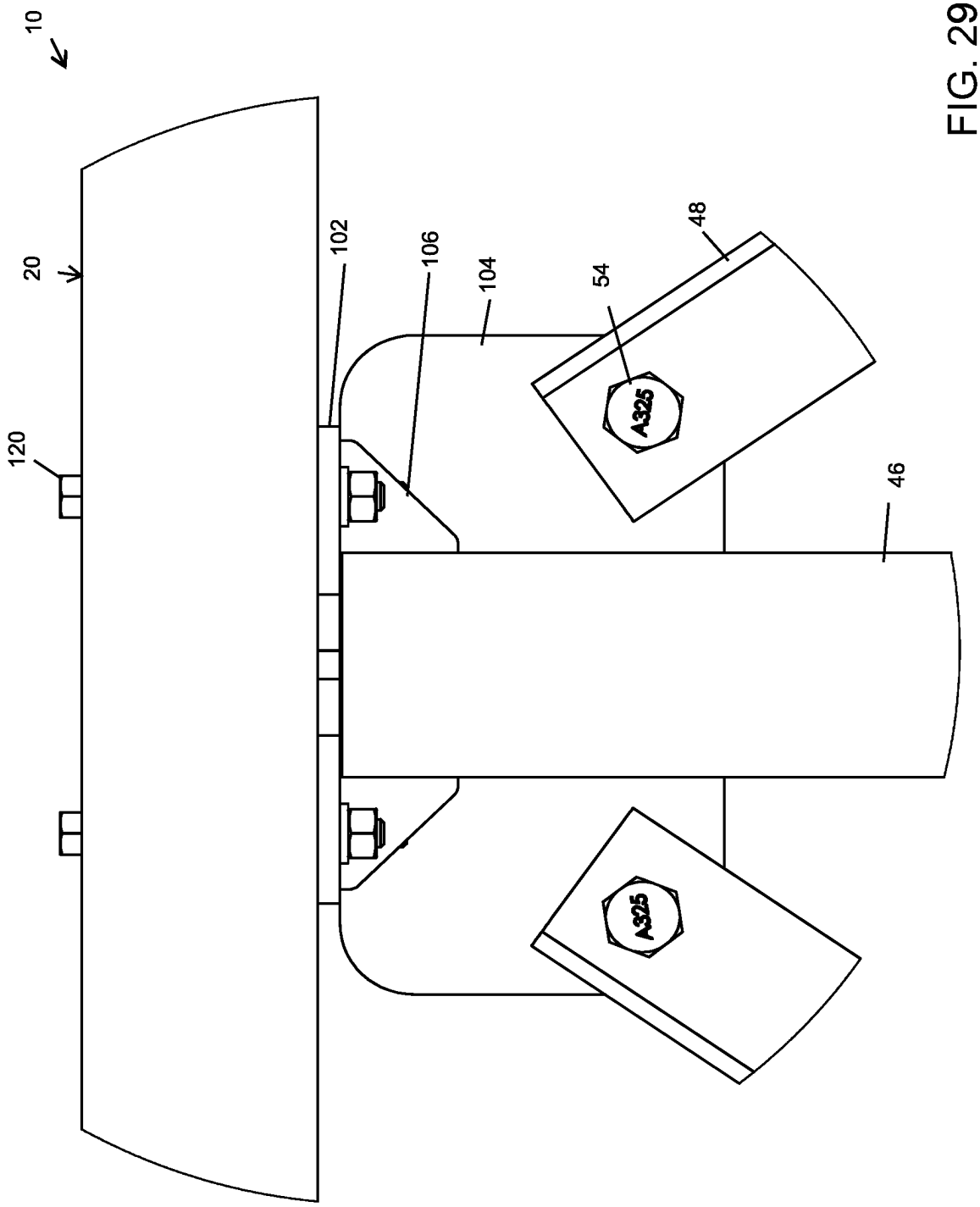

FIG. 29

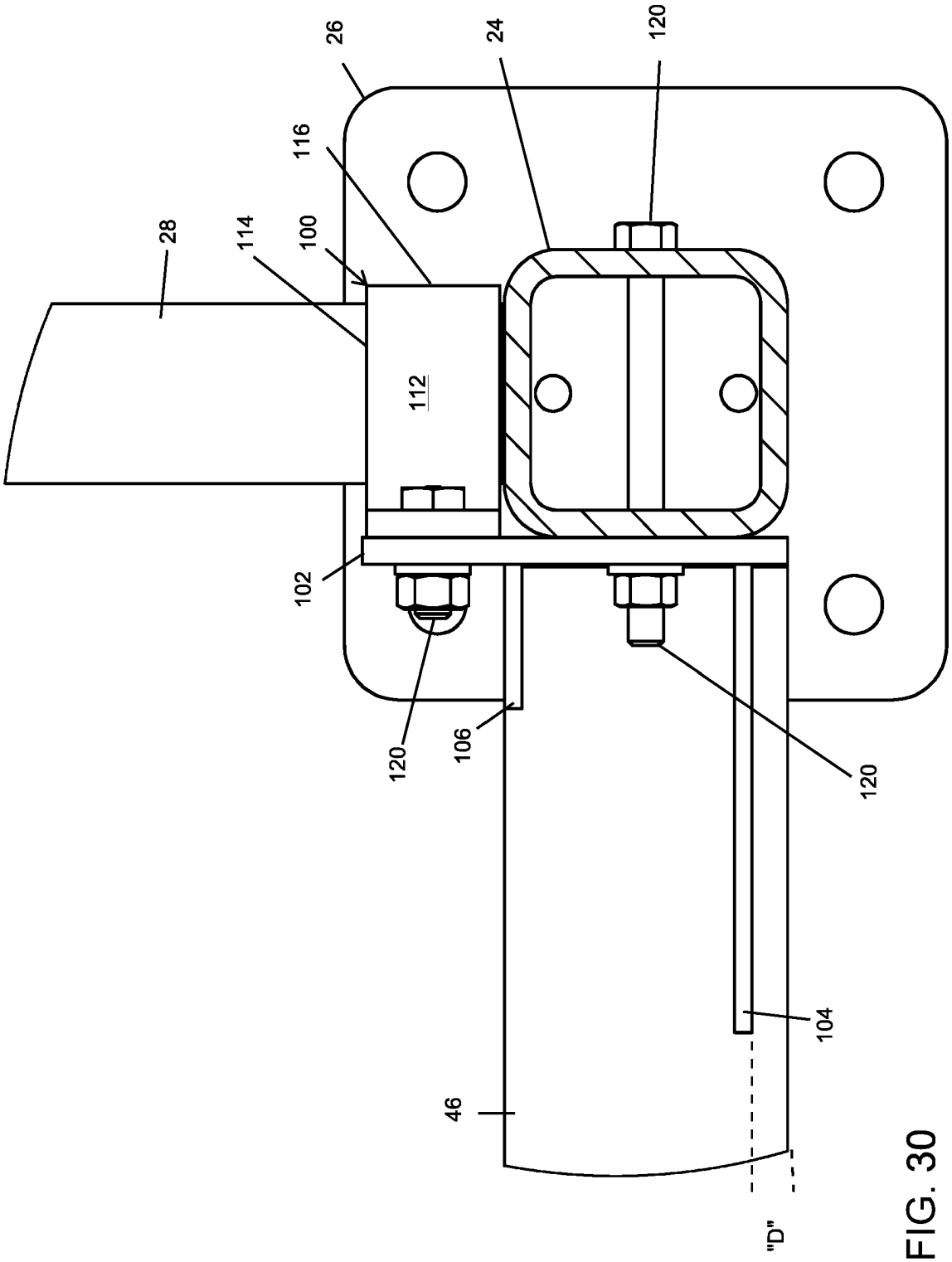

FIG. 30

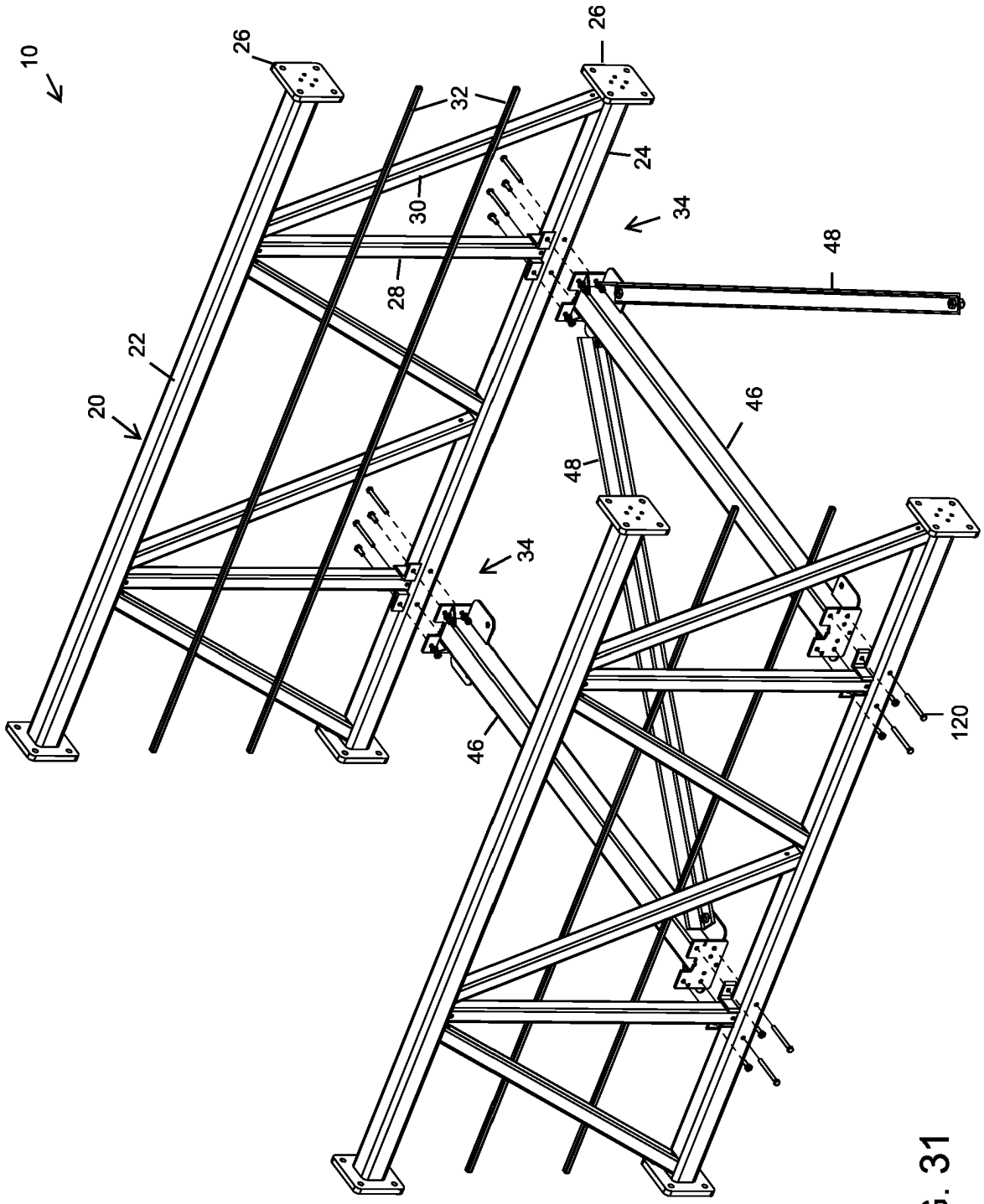

FIG. 31

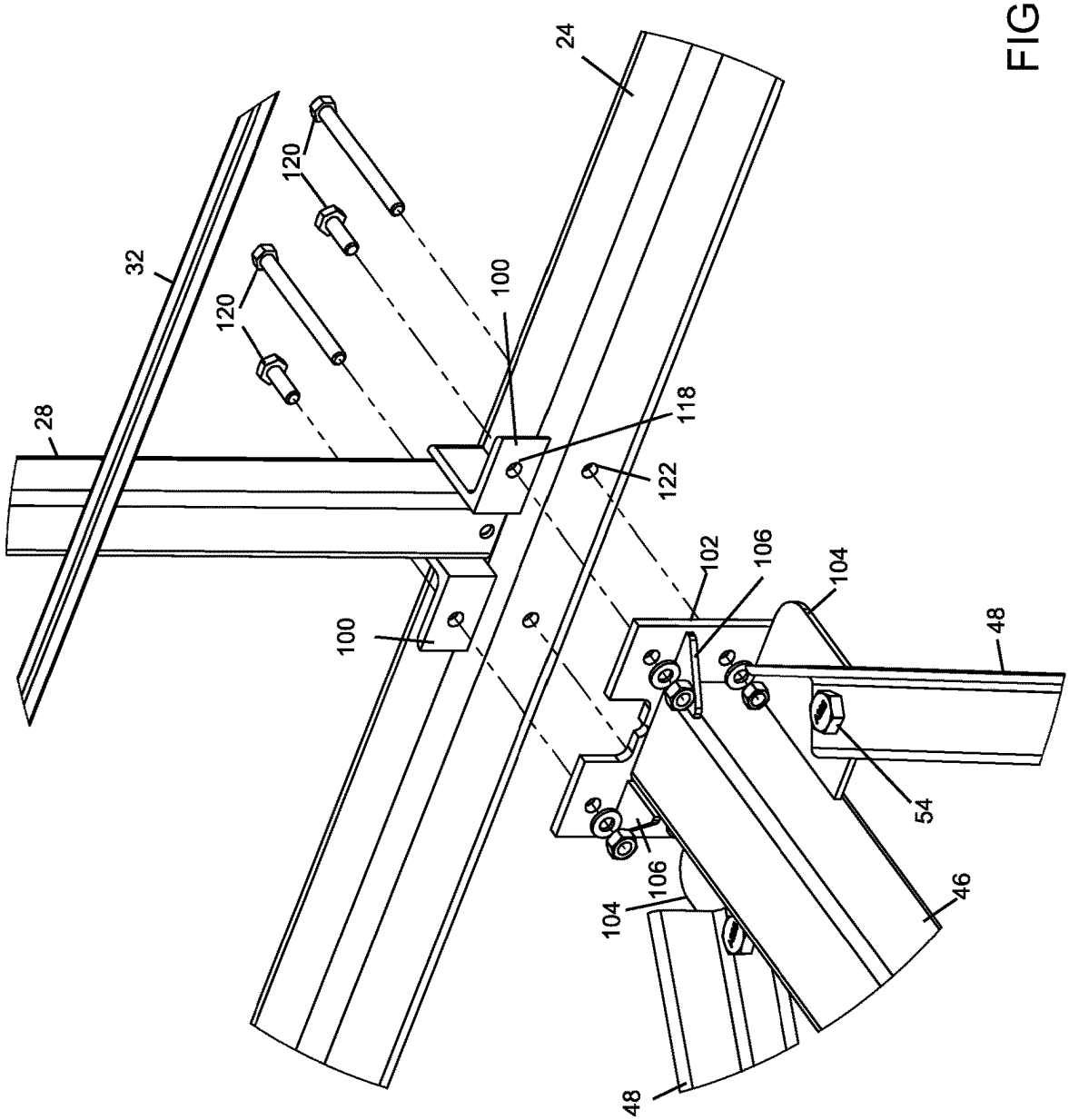

FIG. 32

FIG. 33

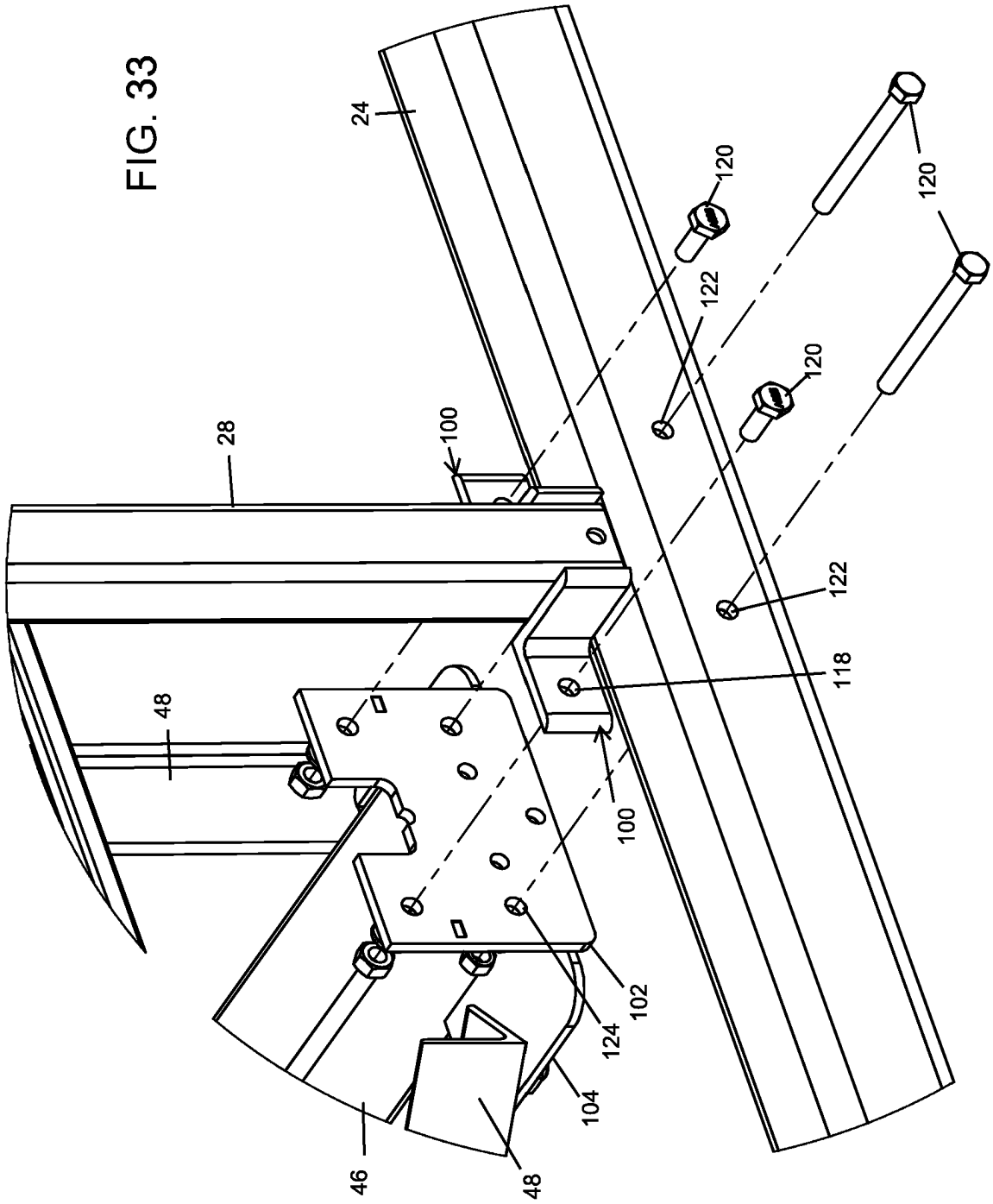

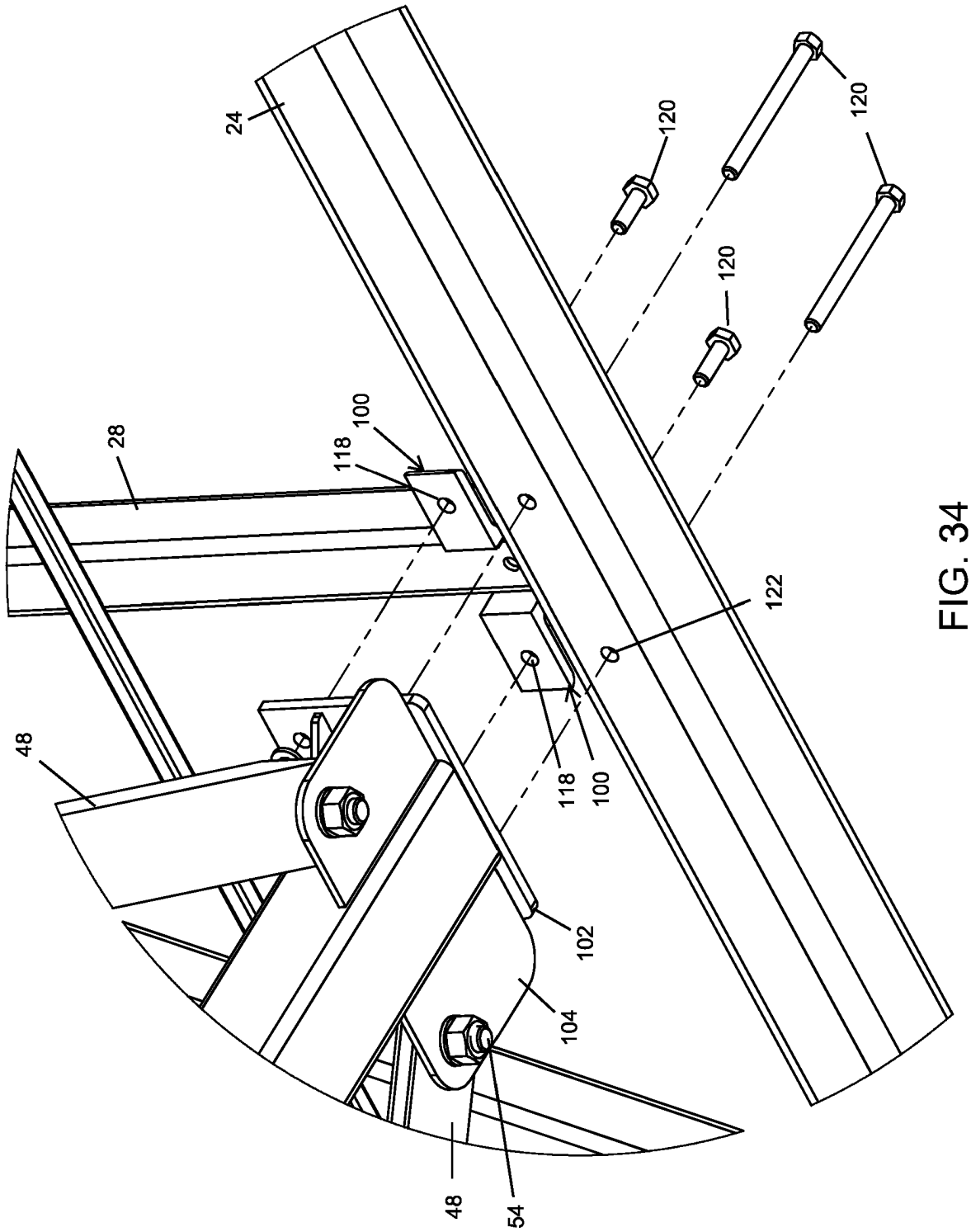

FIG. 34

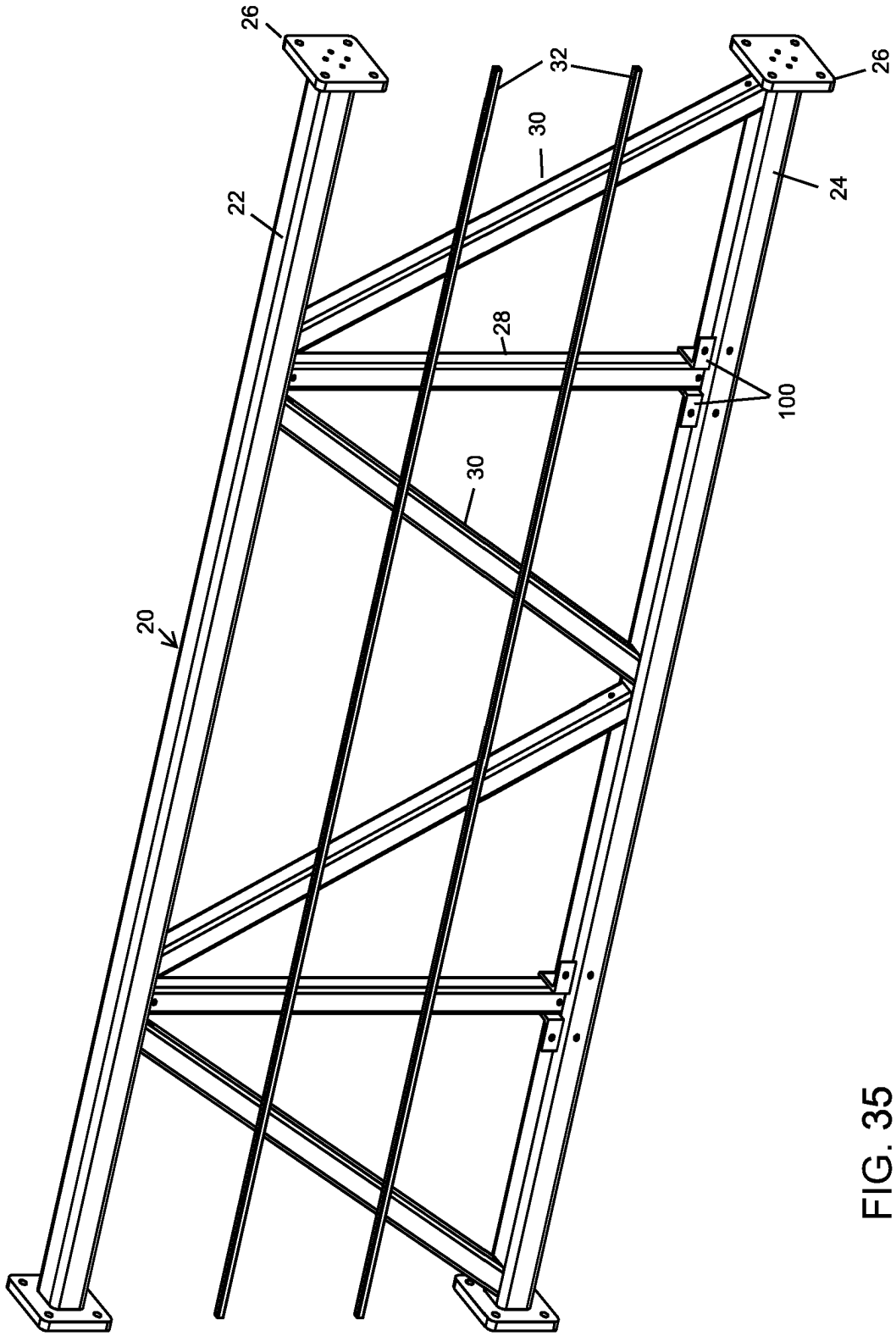

FIG. 35

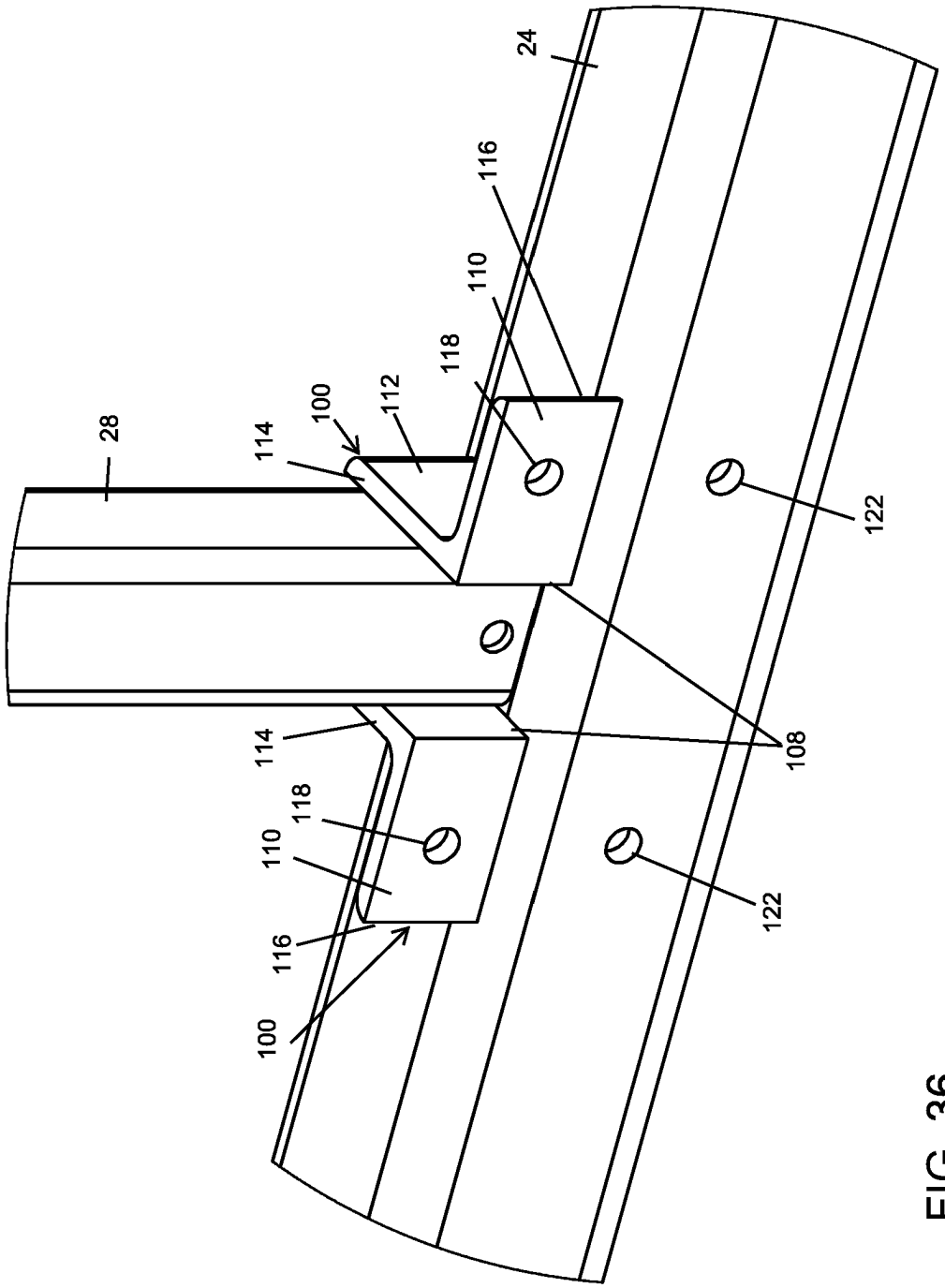

FIG. 36

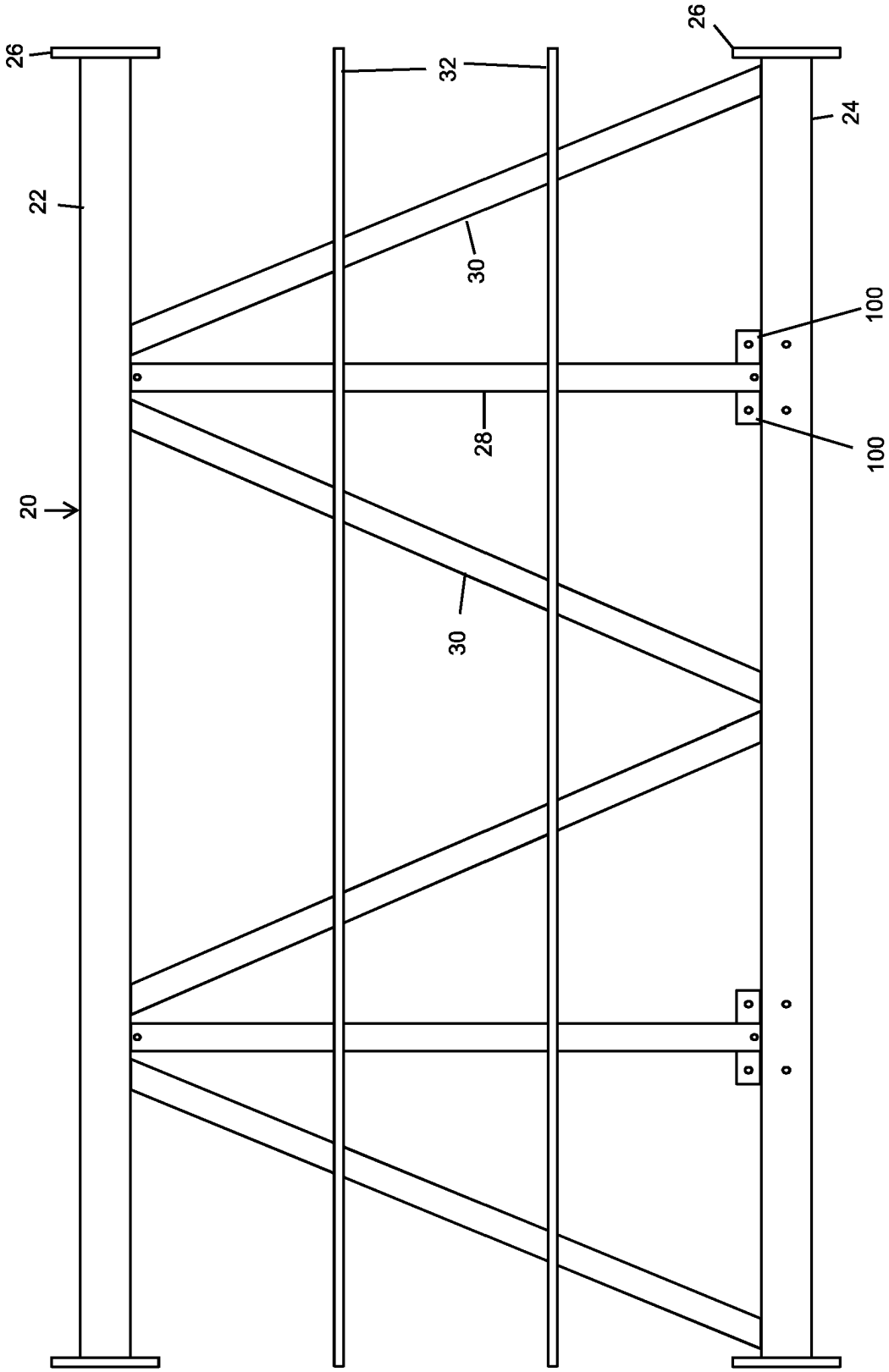

FIG. 37

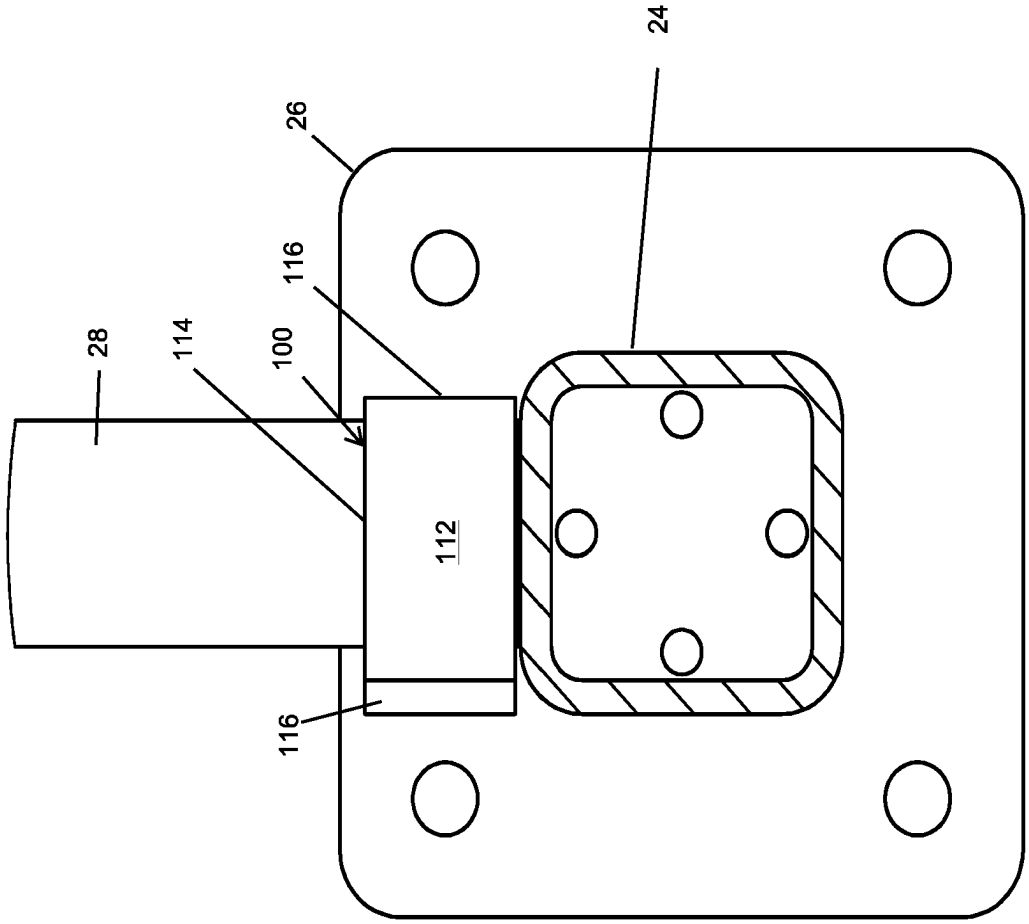

FIG. 38

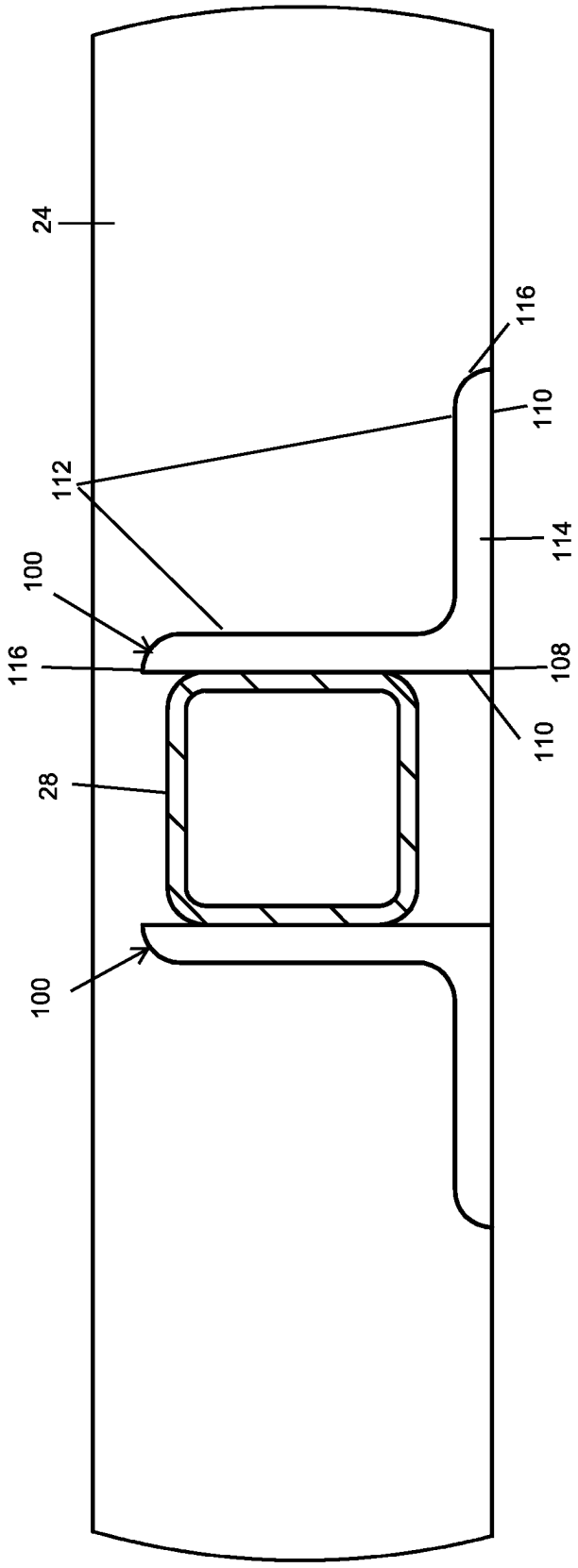

FIG. 39

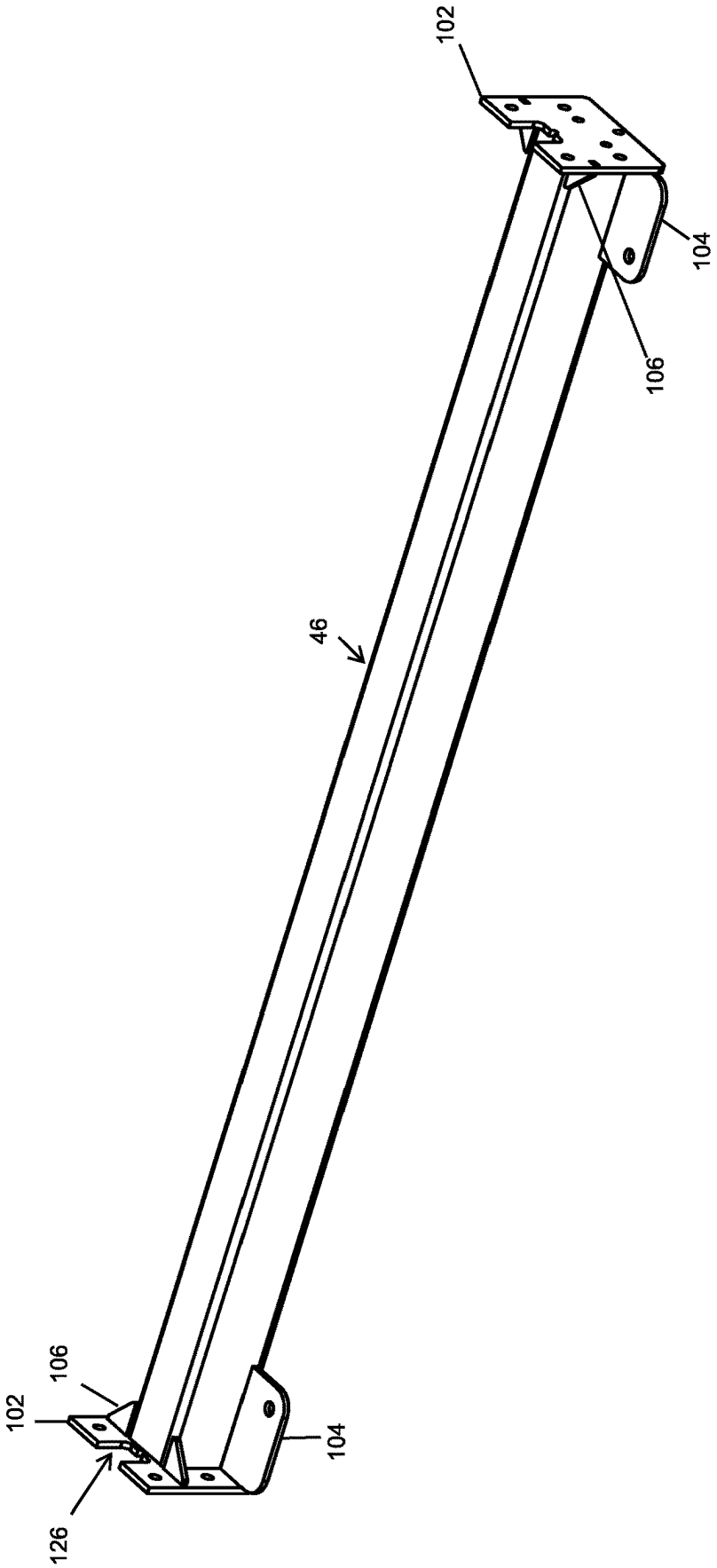

FIG. 40

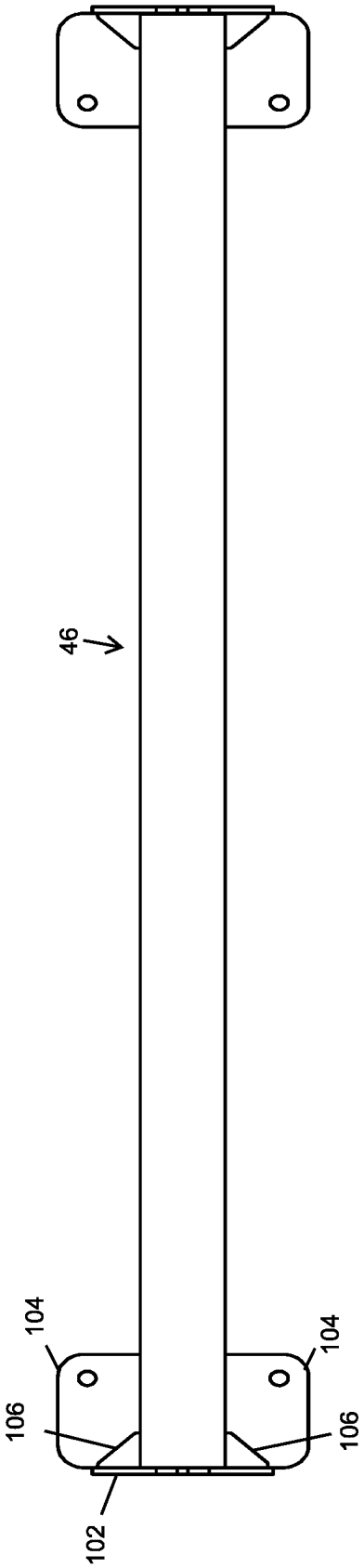

FIG. 41

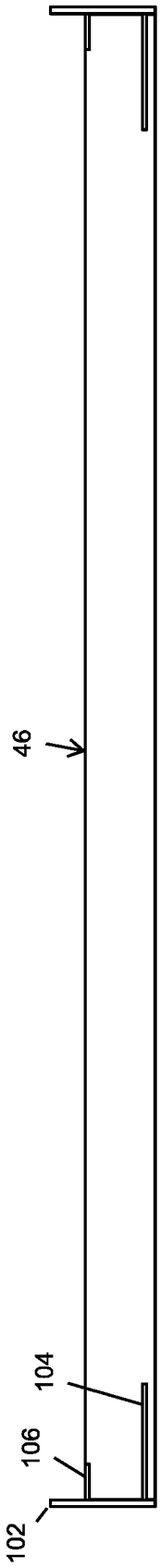

FIG. 42

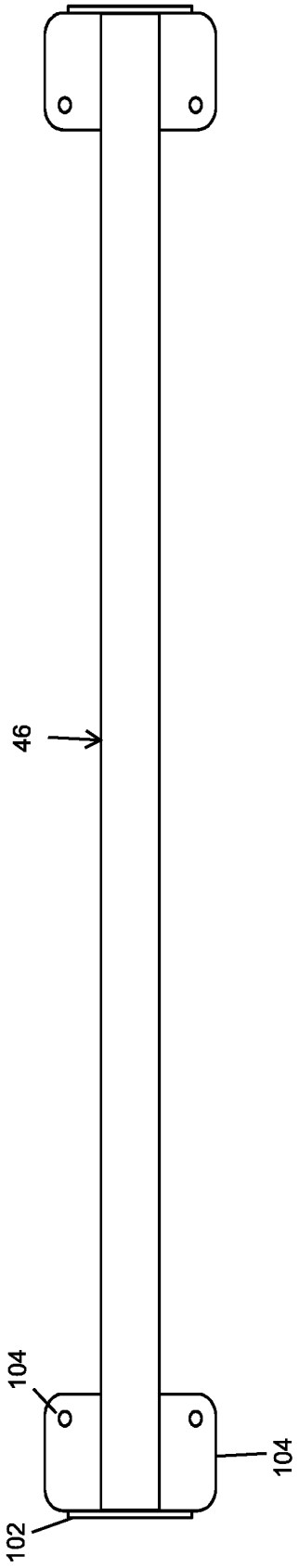

FIG. 43

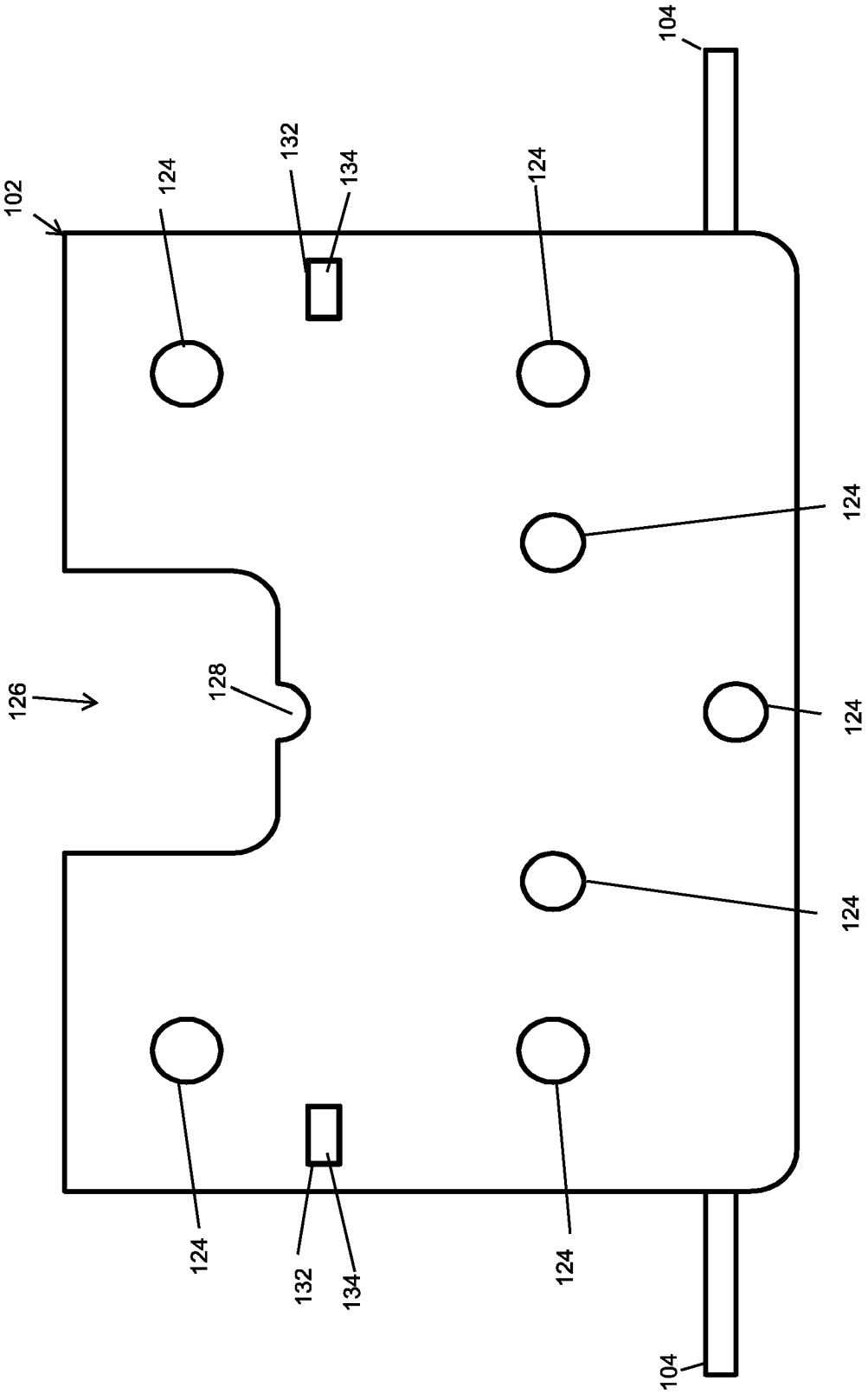

FIG. 44

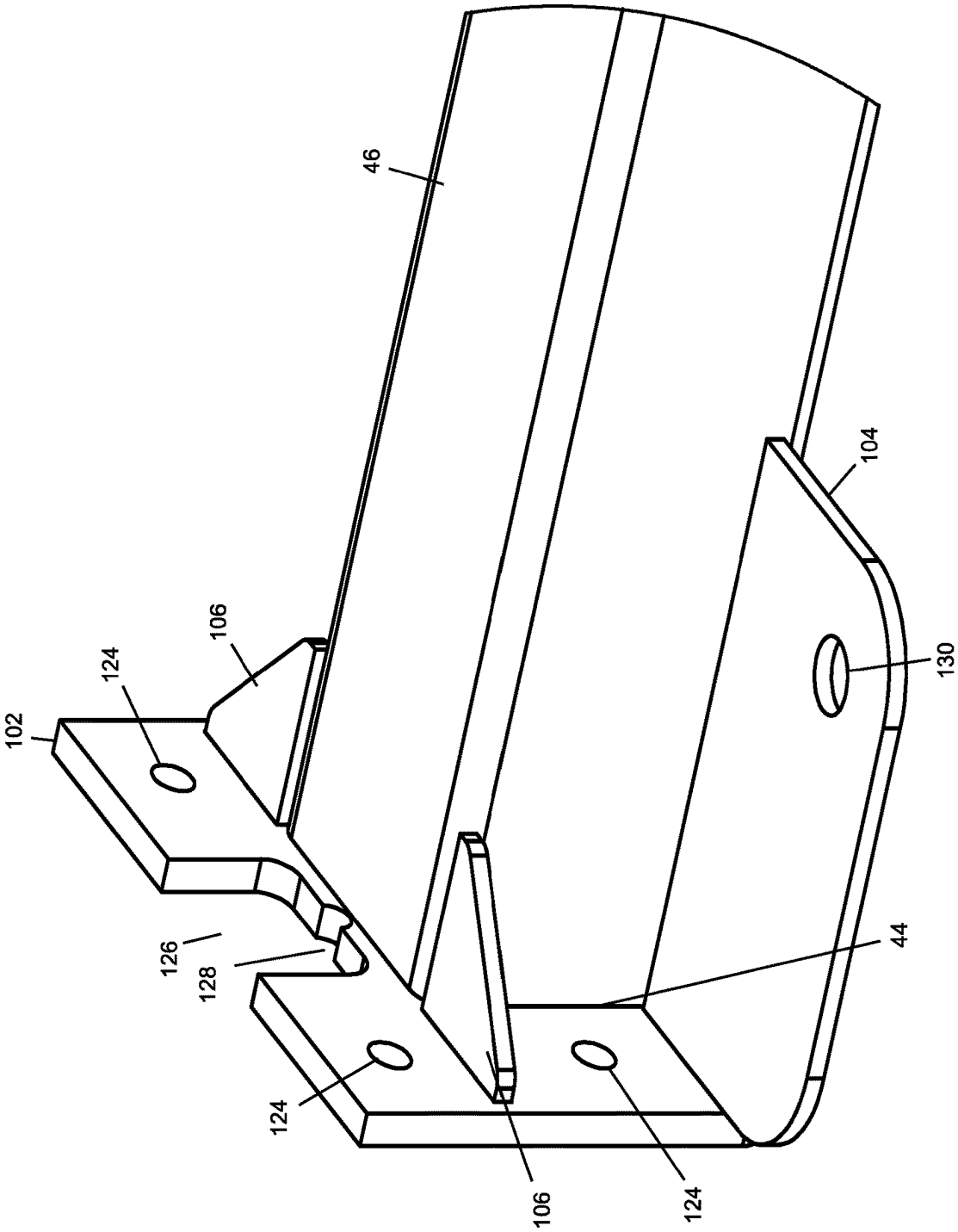

FIG. 45

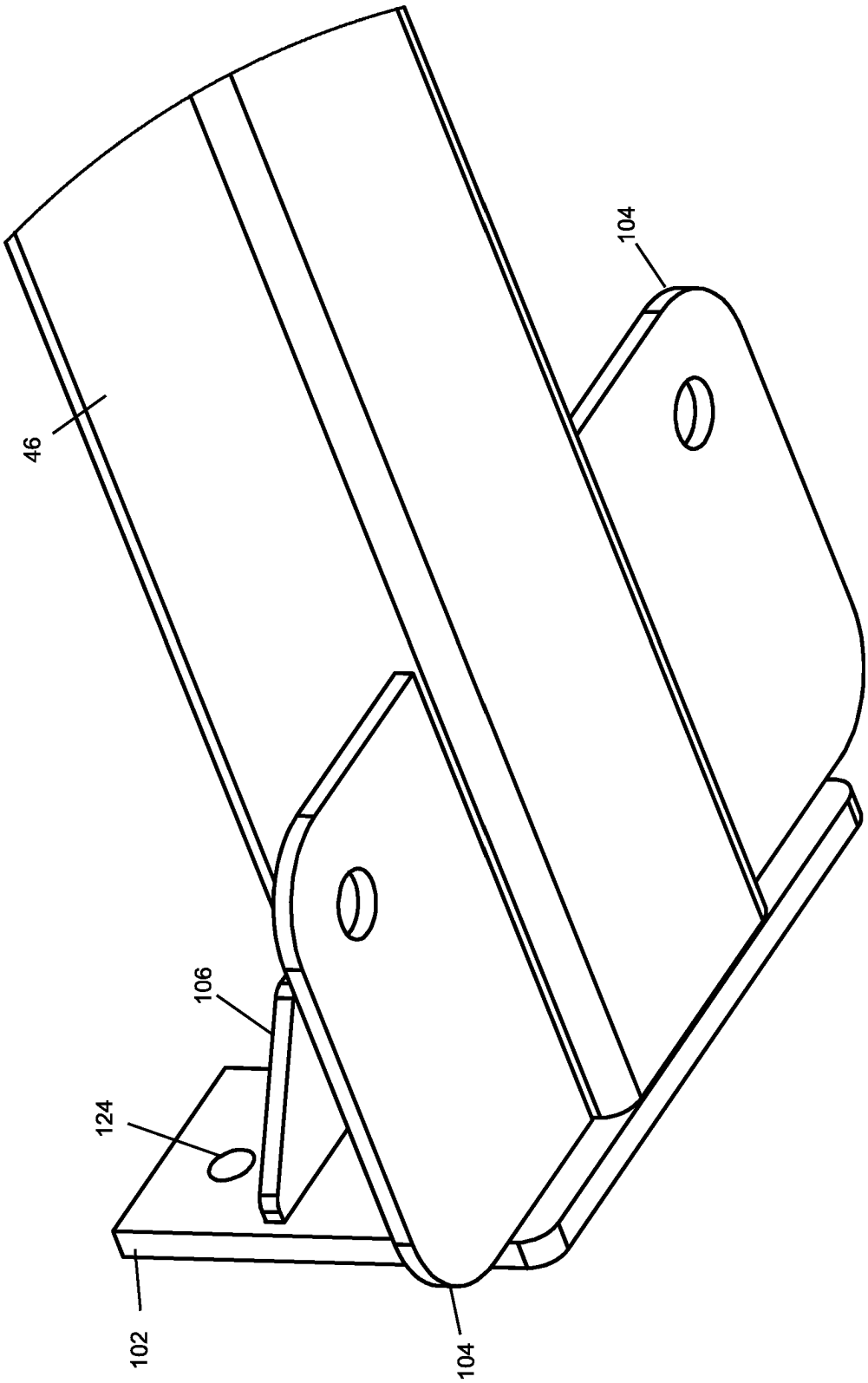

FIG. 46

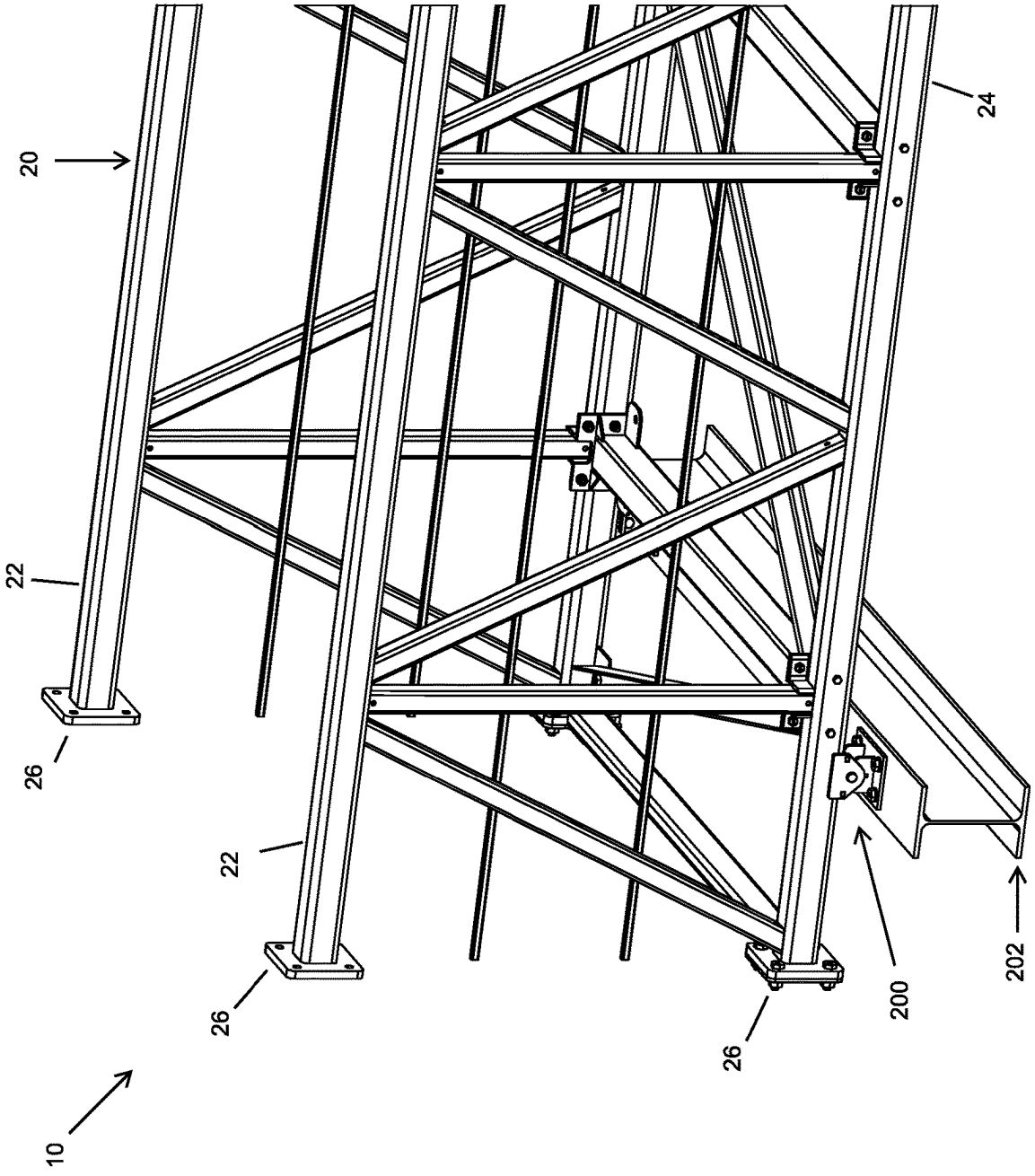

FIG. 47

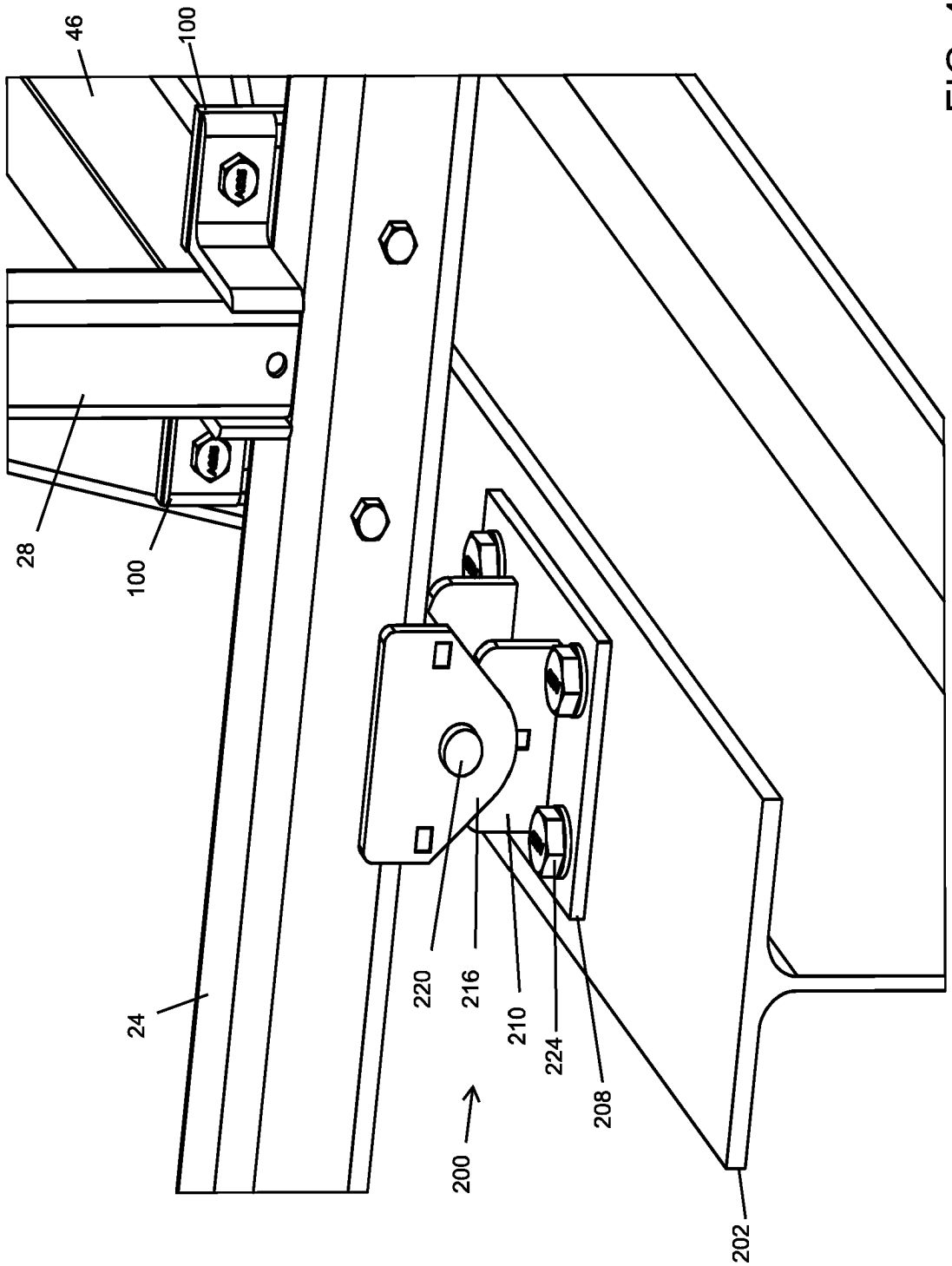

FIG. 48

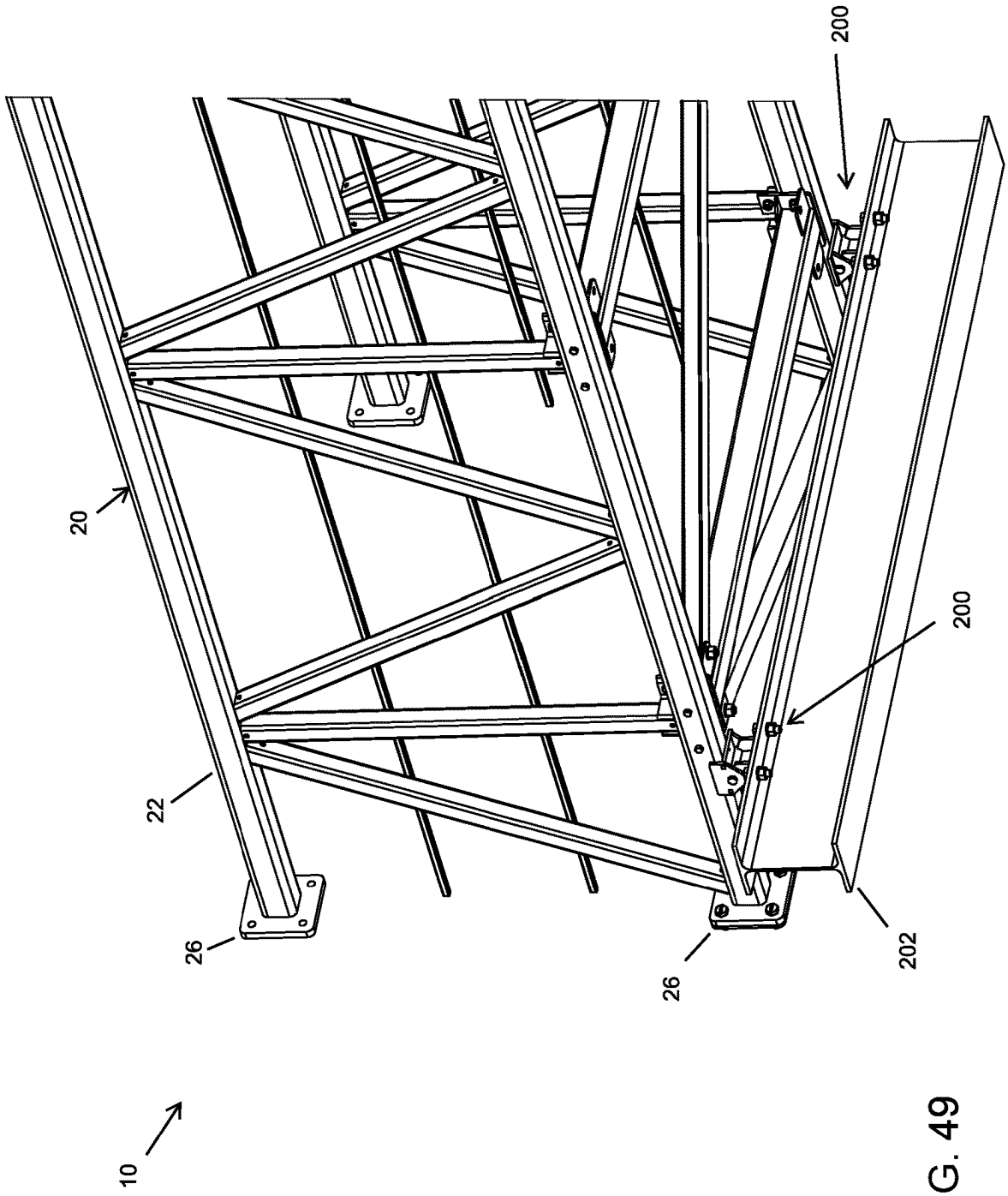

FIG. 49

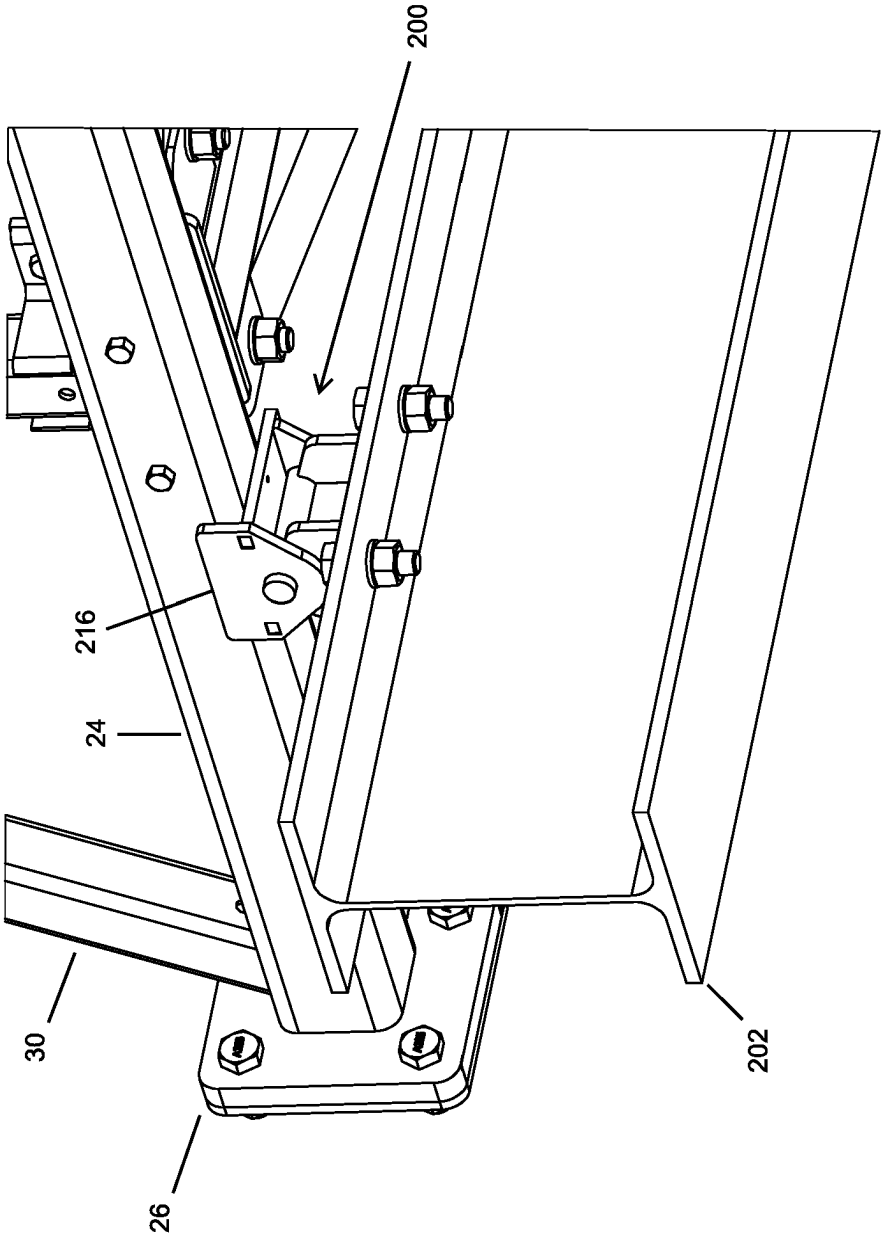

FIG. 50

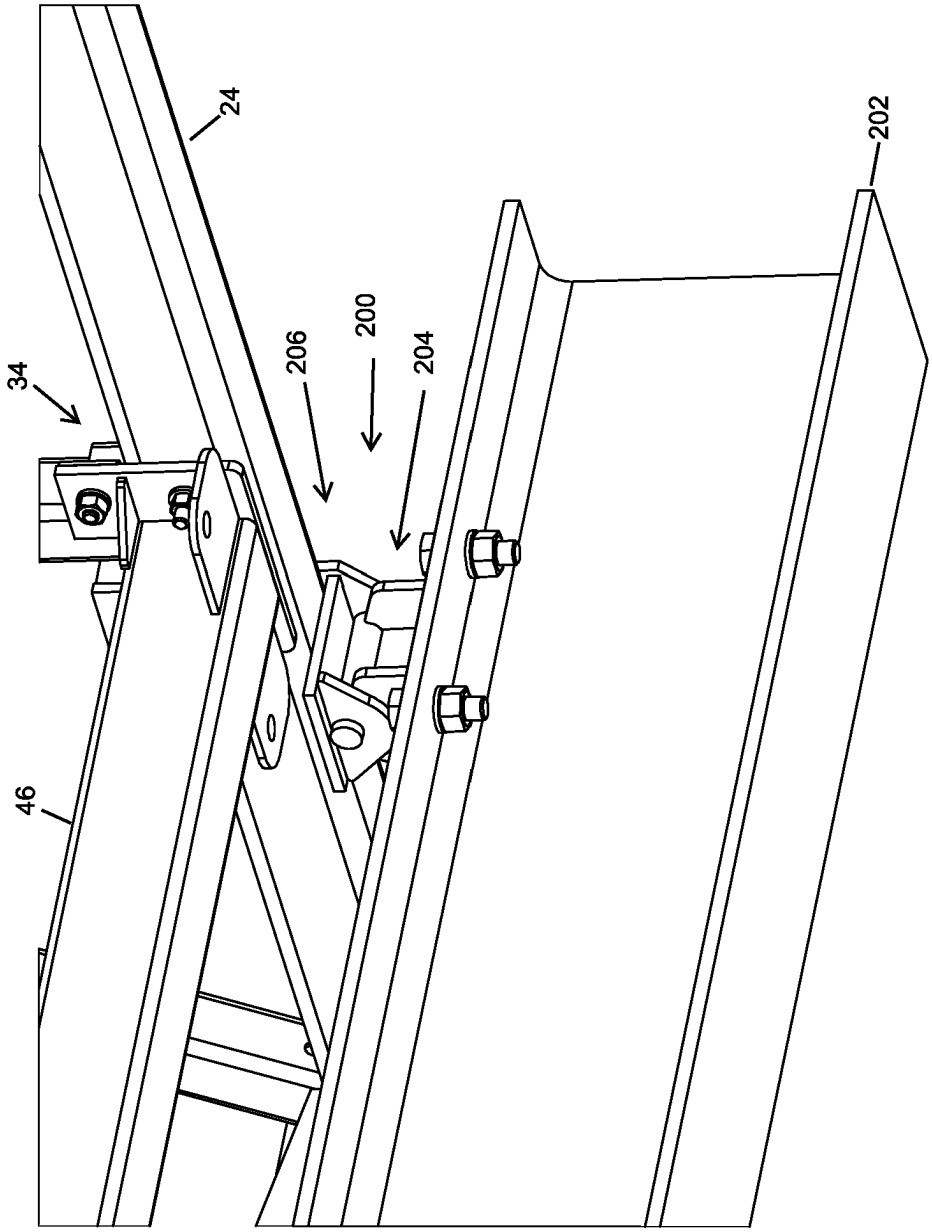

FIG. 51

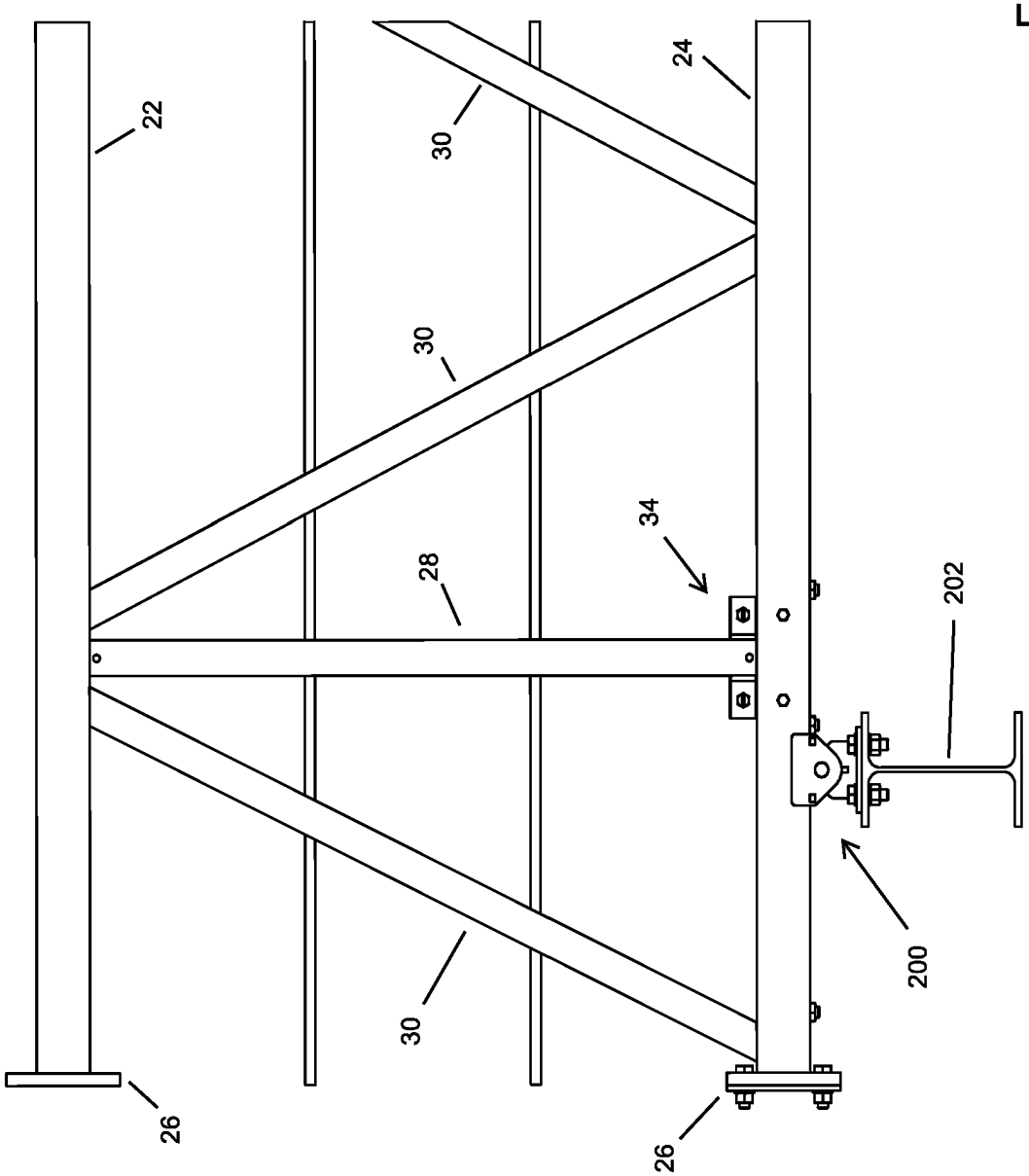

FIG. 52

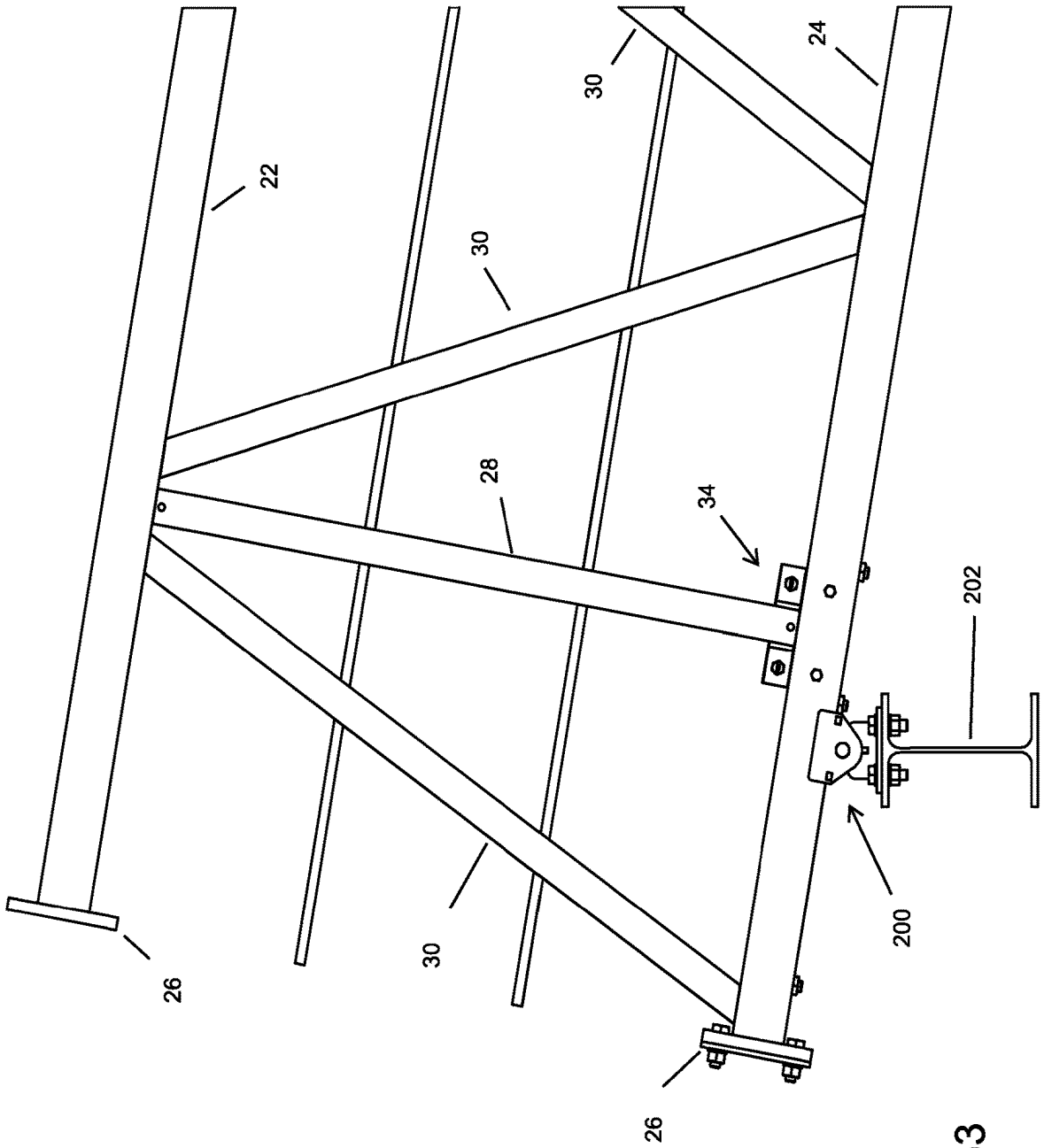

FIG. 53

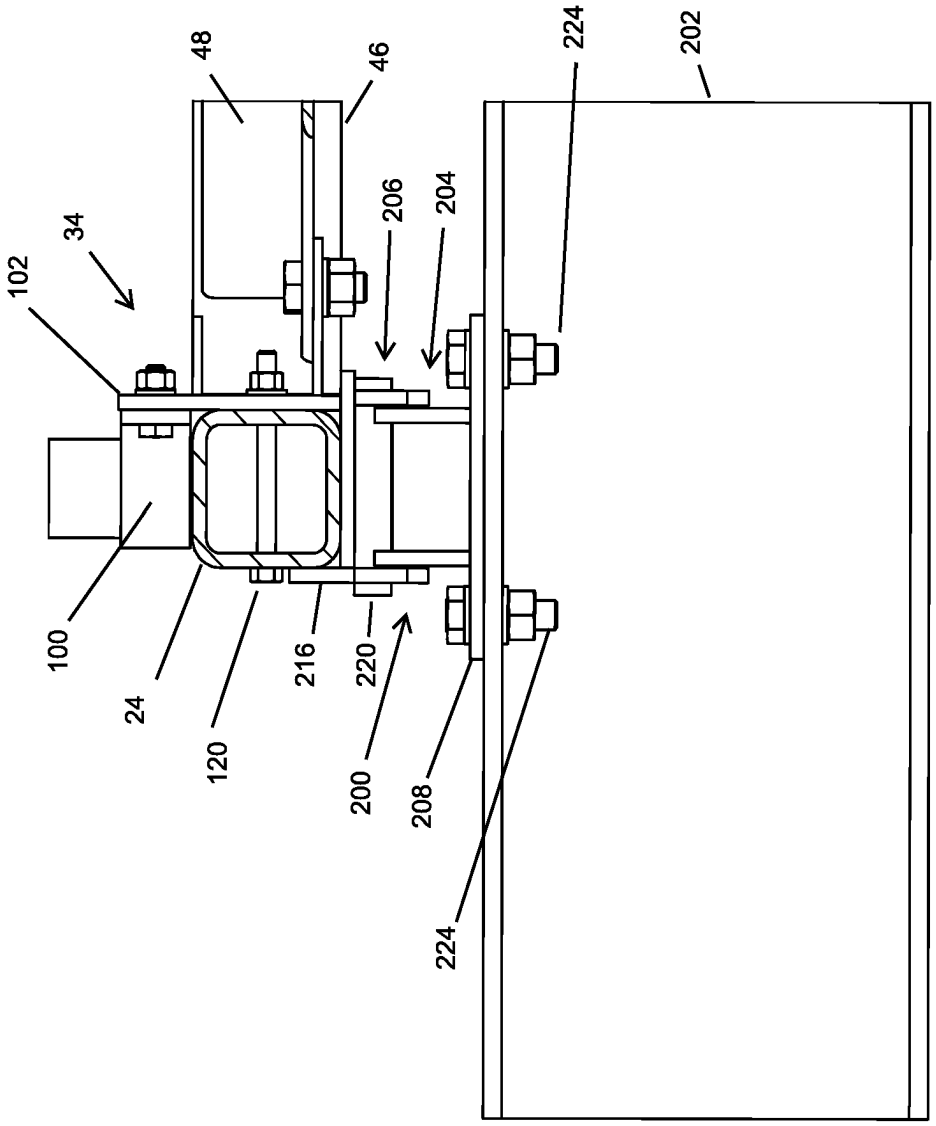

FIG. 54

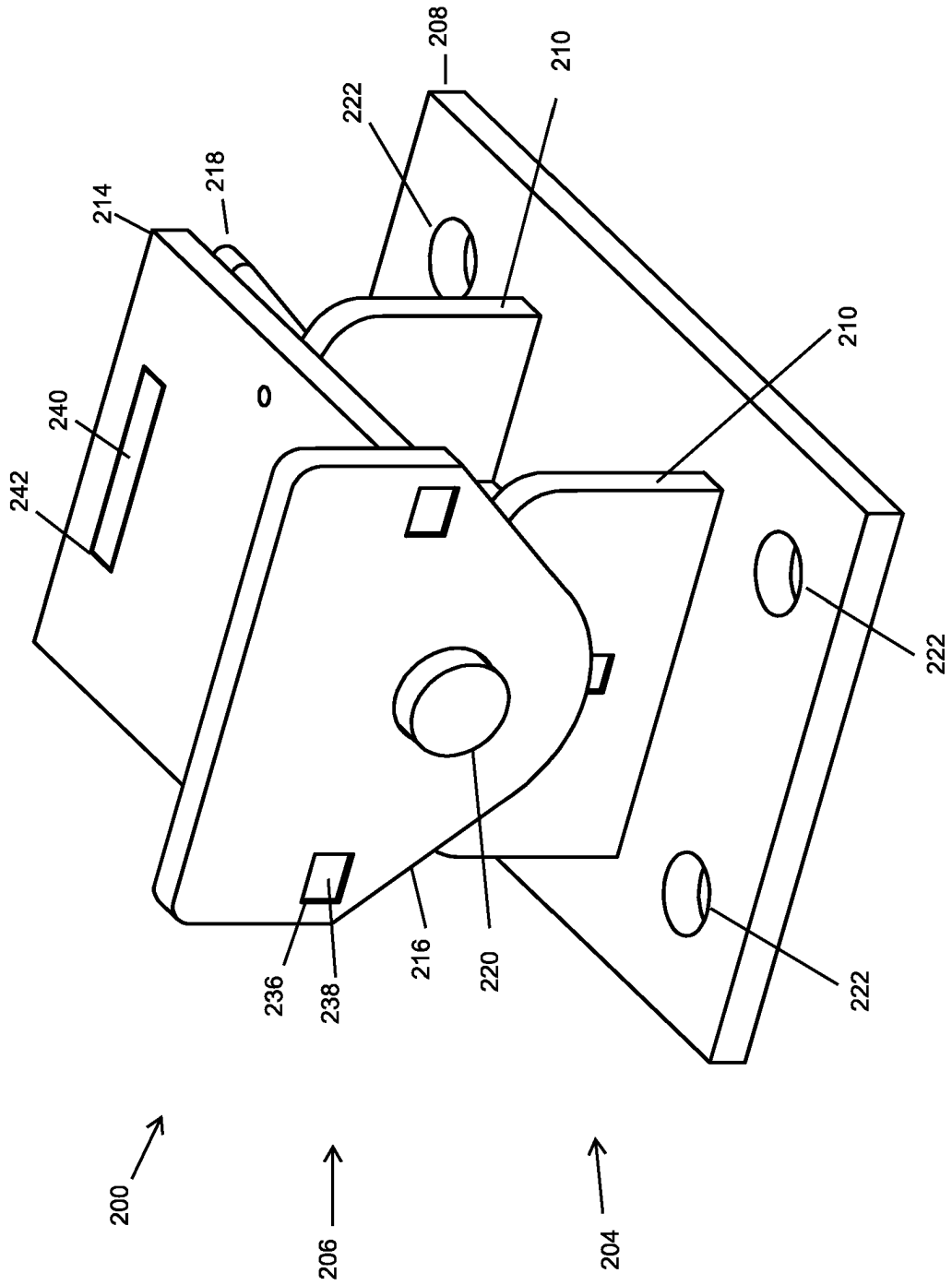
200
206
204
236
238
216
220
242
240
214
218
222
208
210
210
222
222

FIG. 55

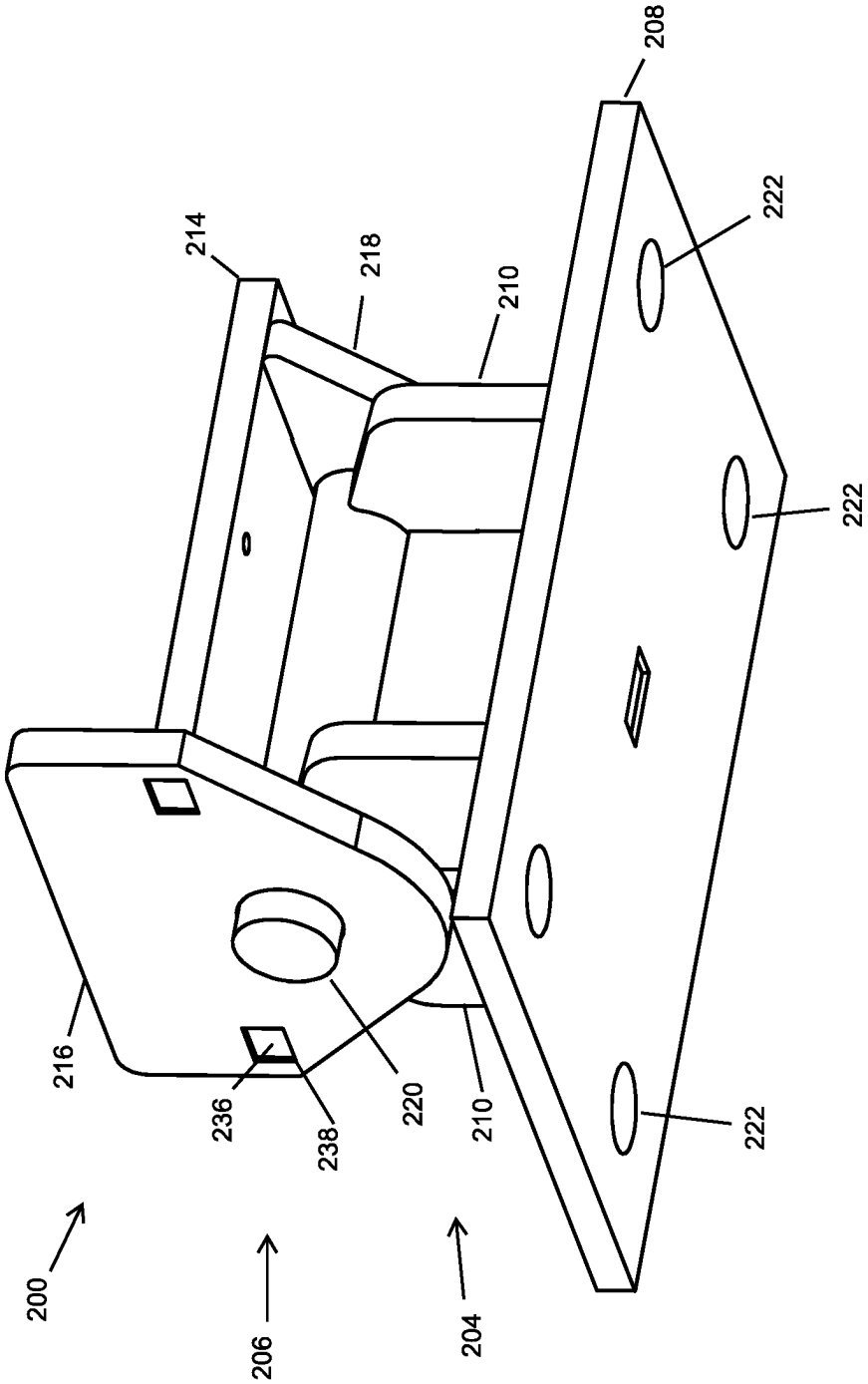

FIG. 56

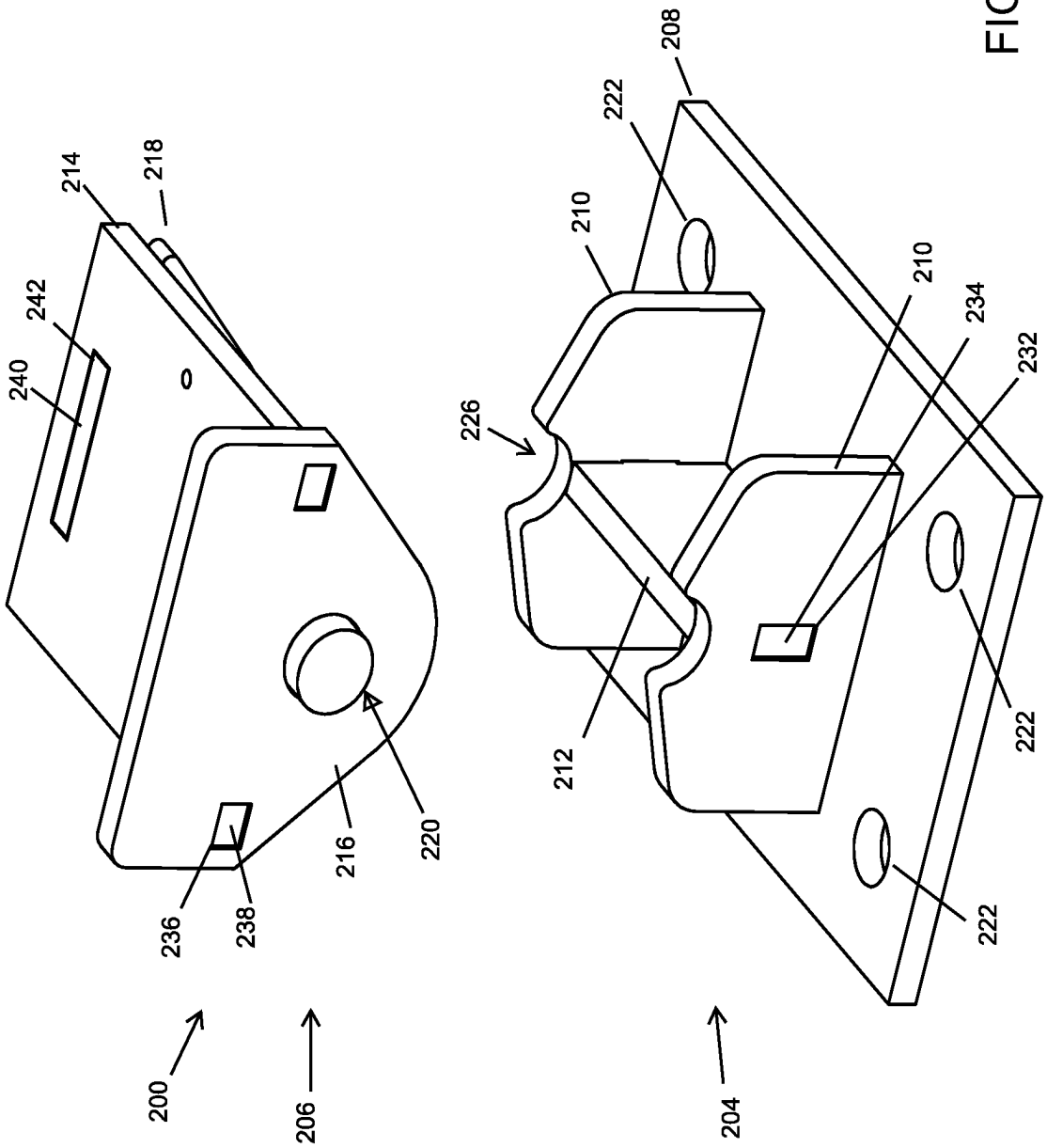
200
206
204
214
218
242
240
236
238
216
220
208
222
210
226
212
234
232

FIG. 57

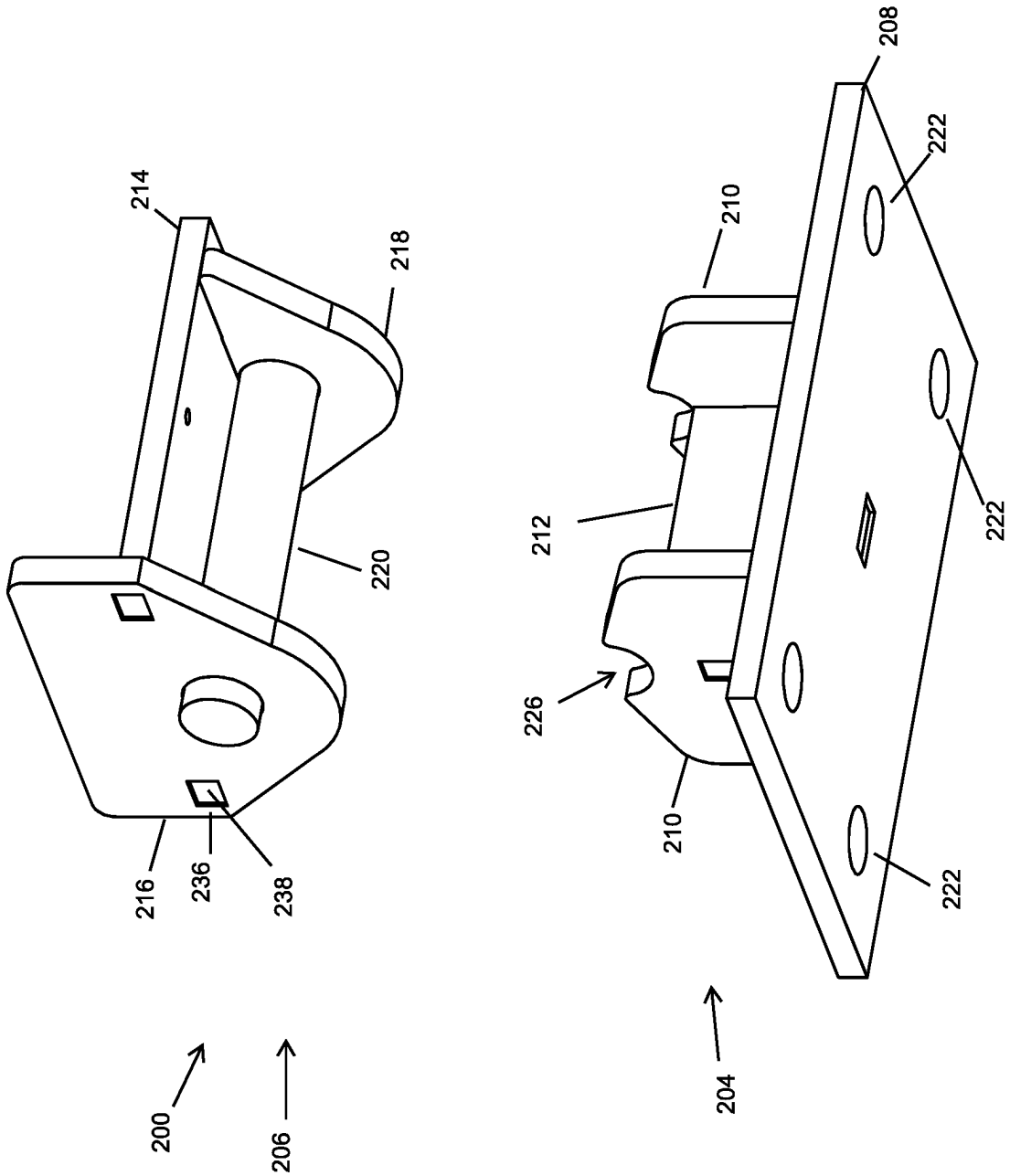
200
206
216
236
238
214
220
218
204
226
210
212
210
208
222
222
222

FIG. 58

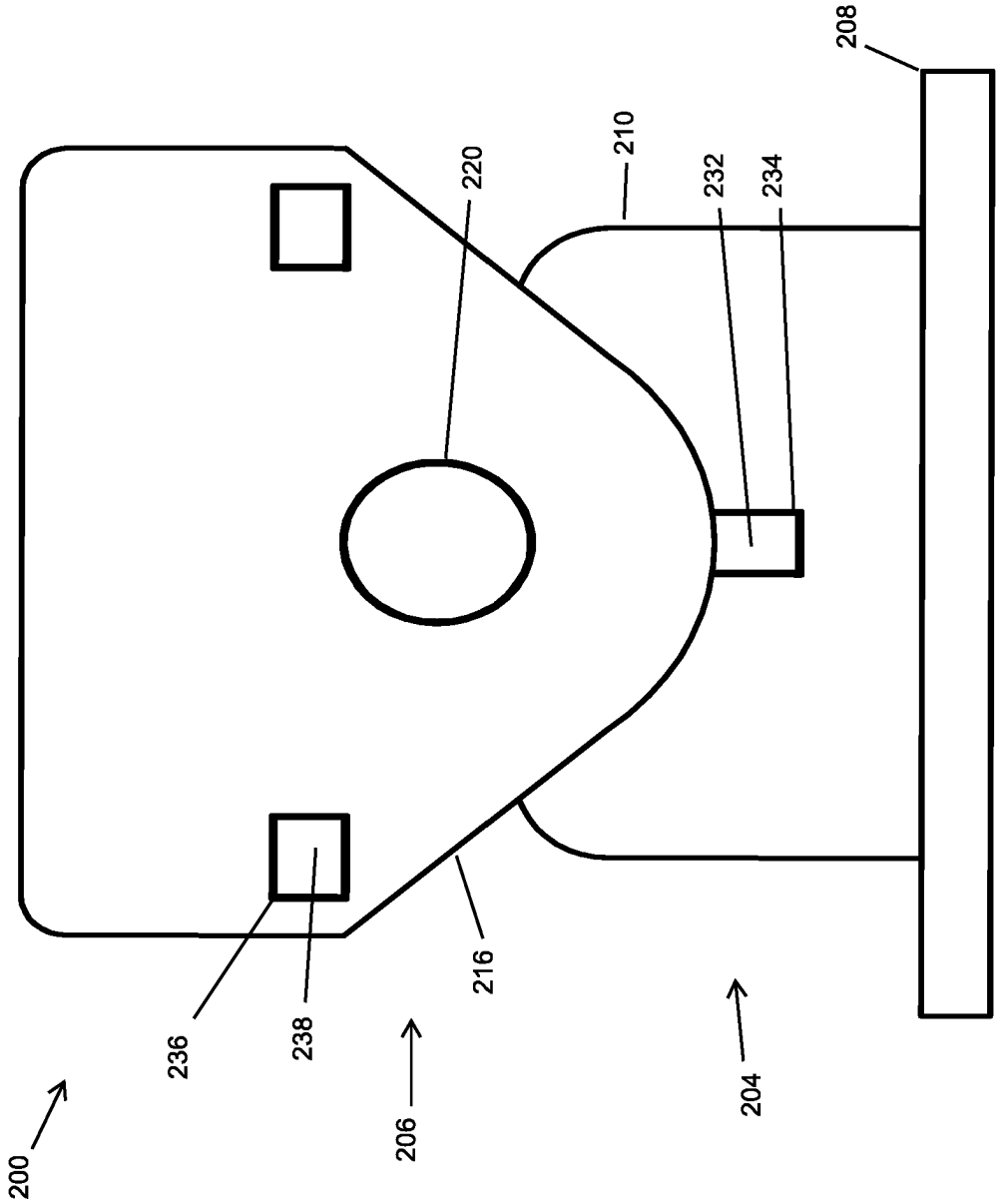

FIG. 59

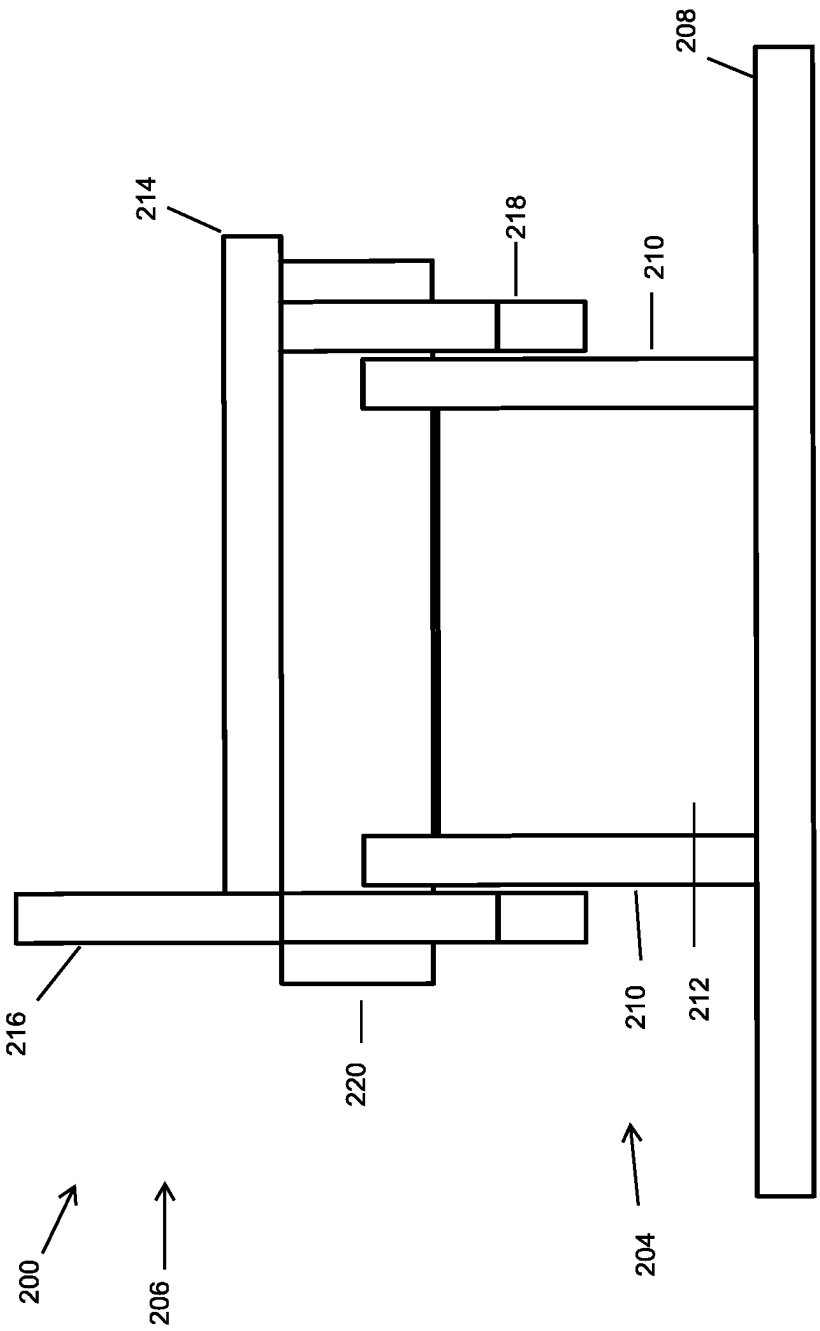

FIG. 60

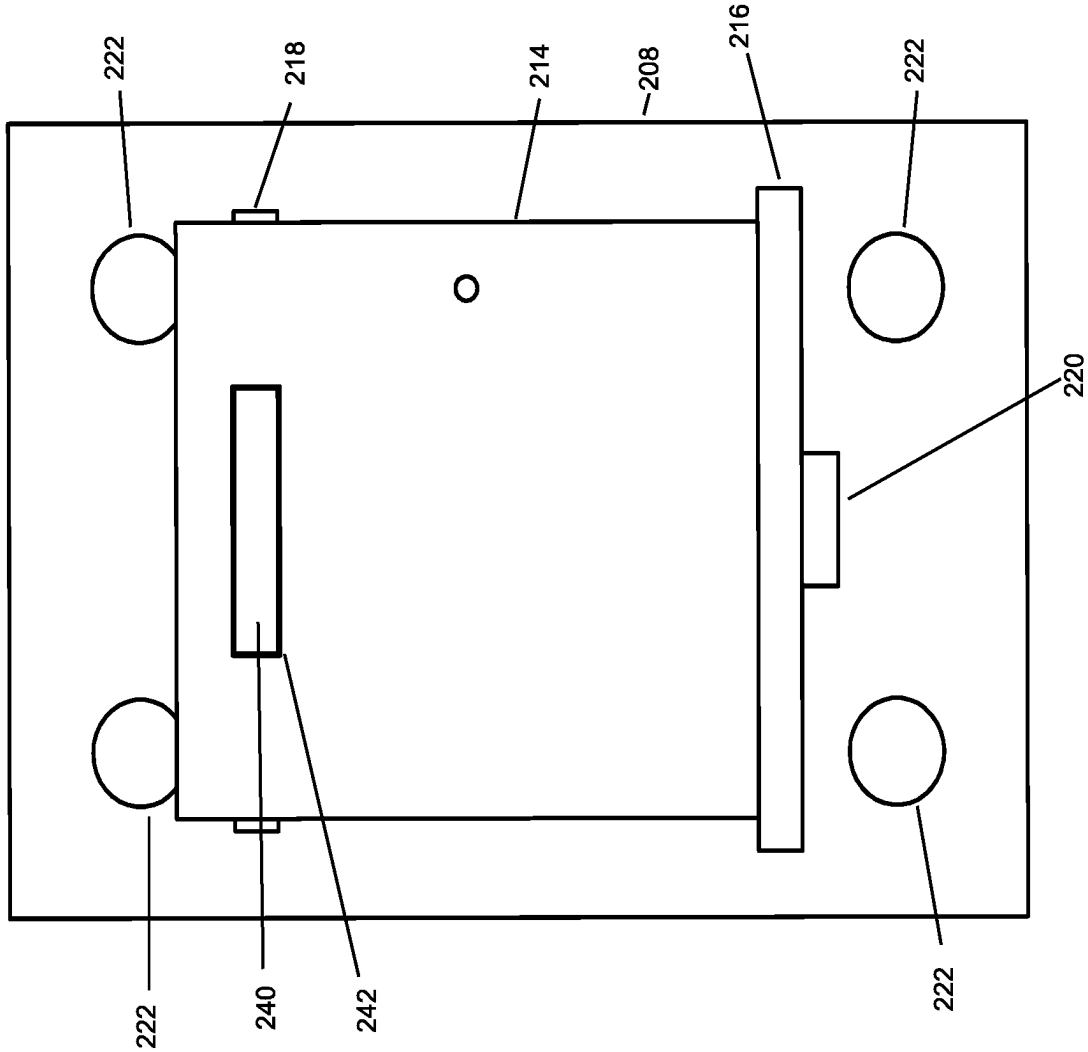

FIG. 61

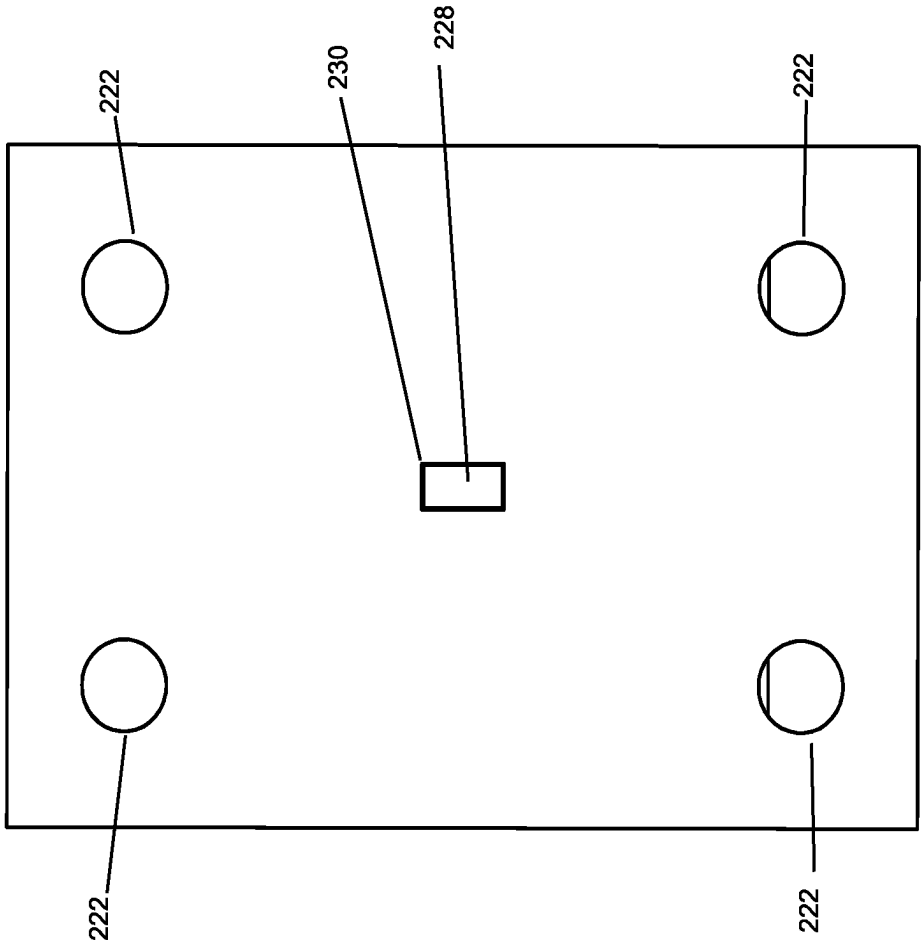

FIG. 62

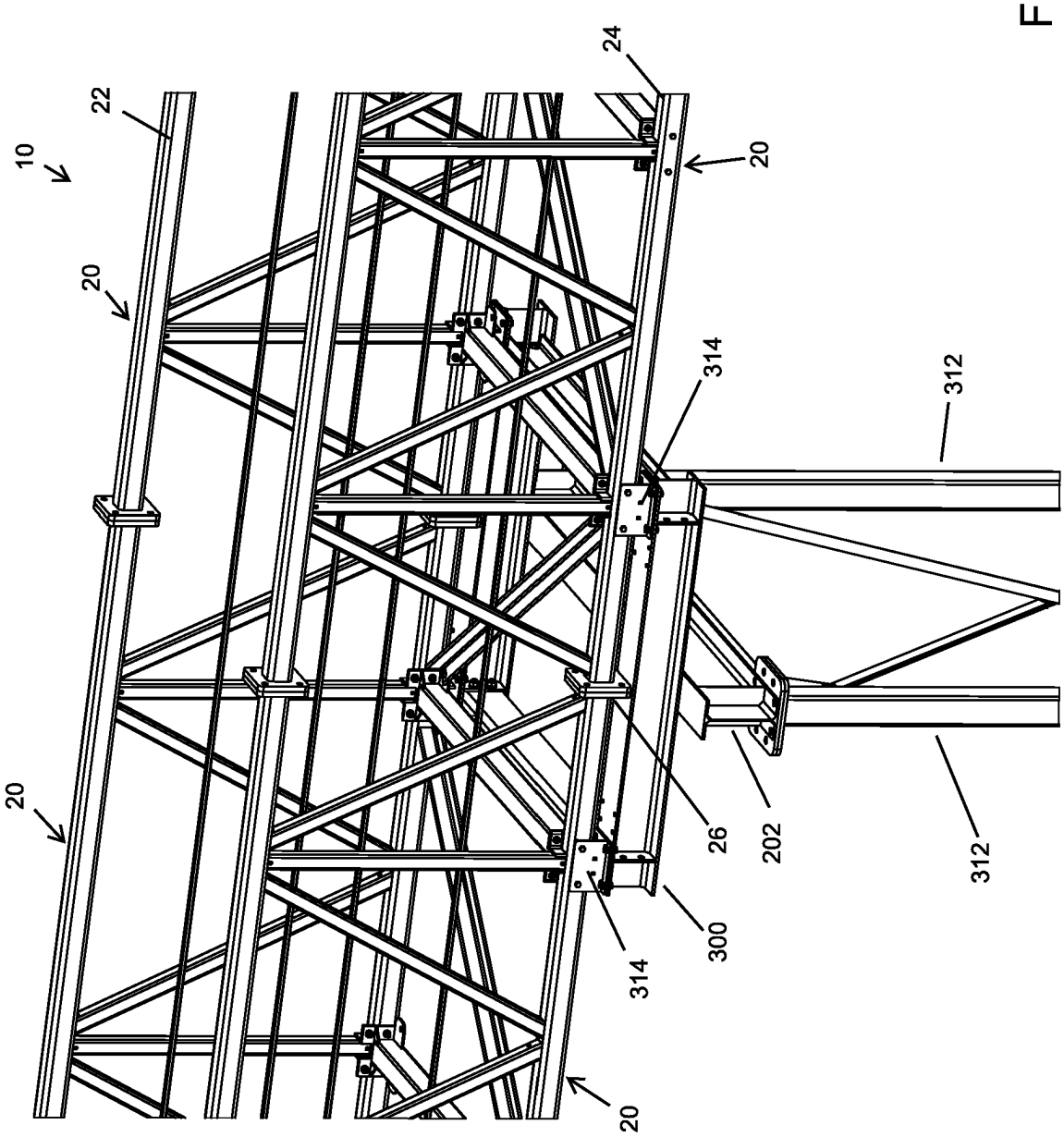

FIG. 63

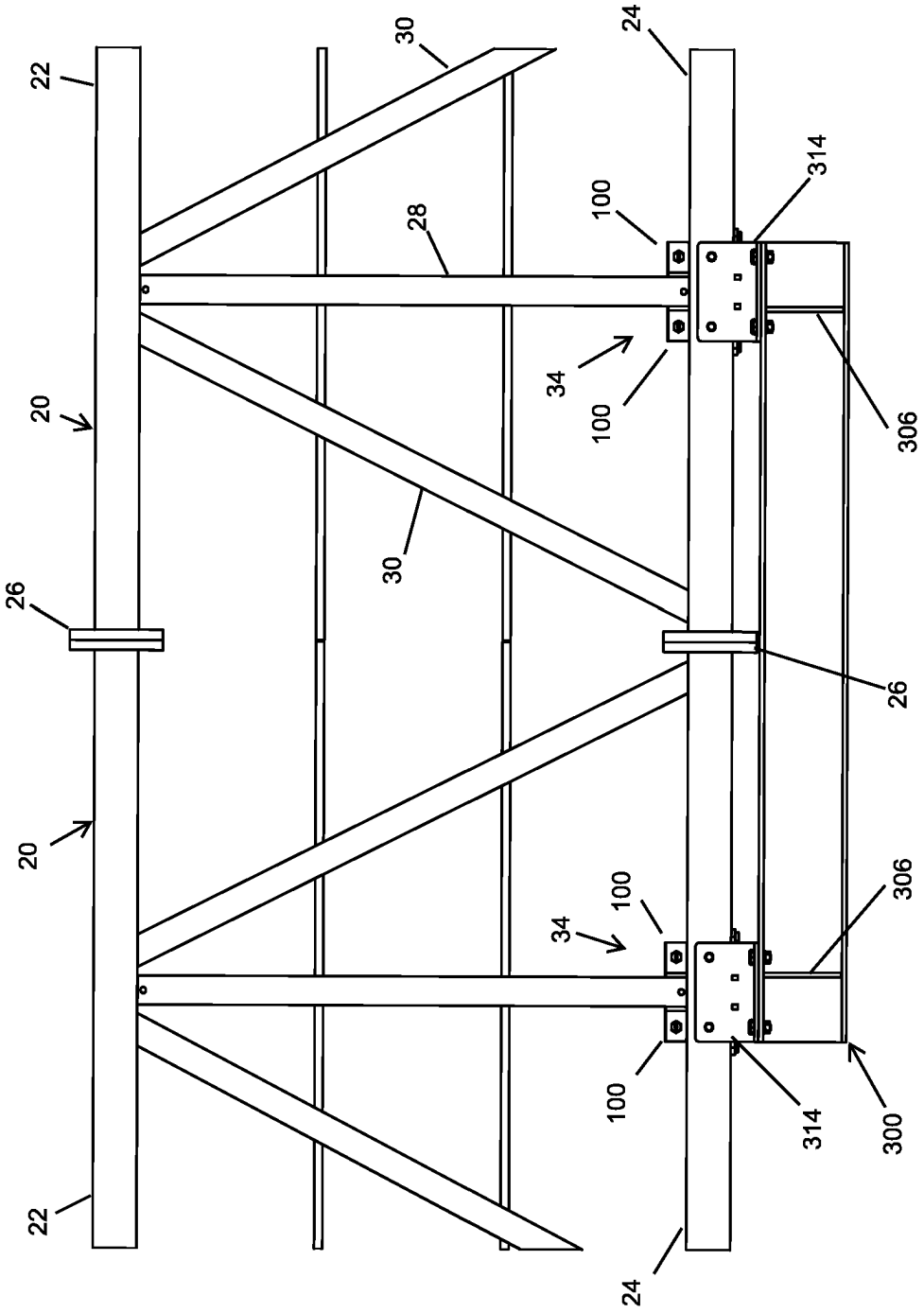
22
20
26
20
22
30
28
30
24
24
100
100
100
100
34
34
314
314
306
306
26
300

FIG. 64

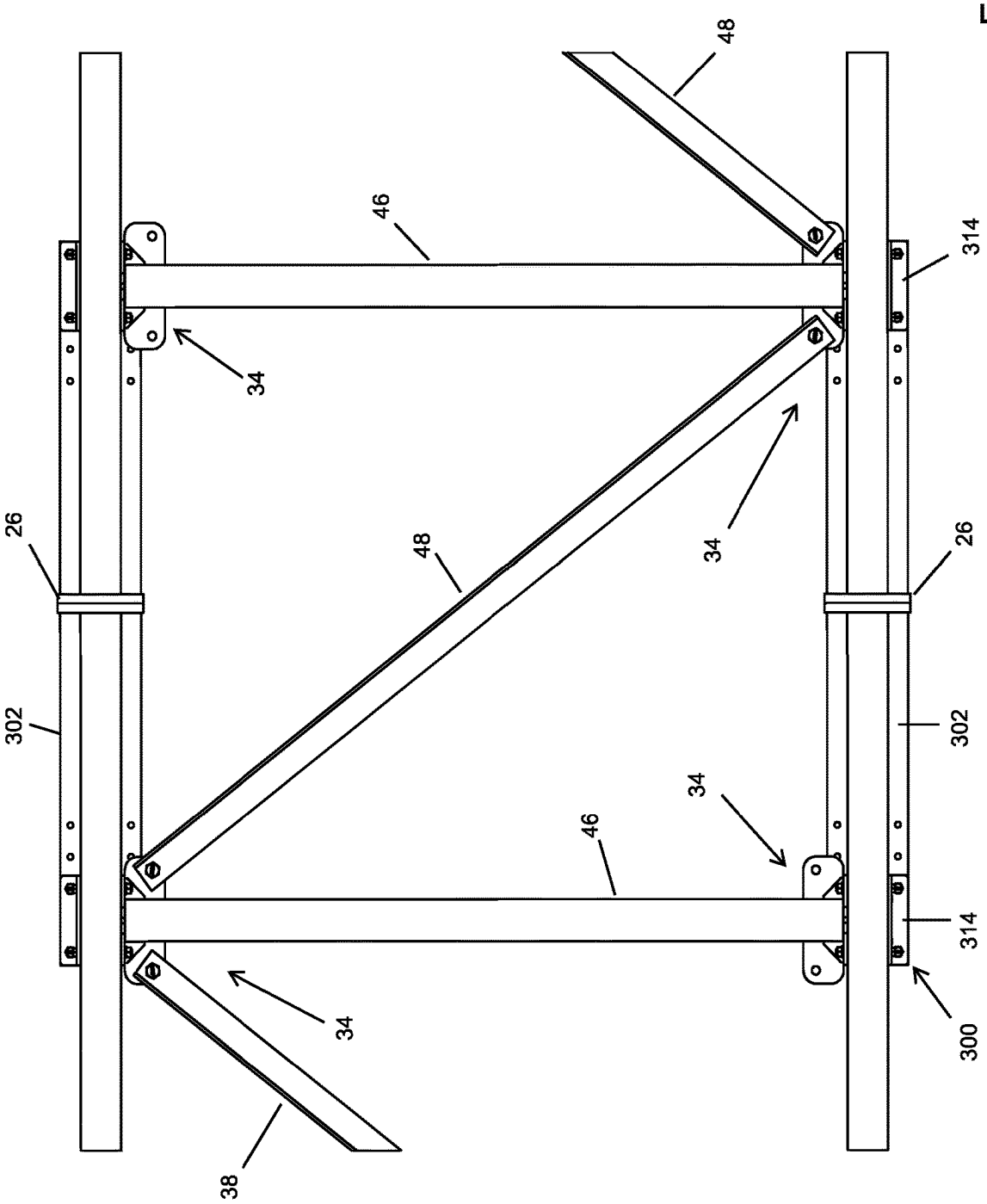

FIG. 65

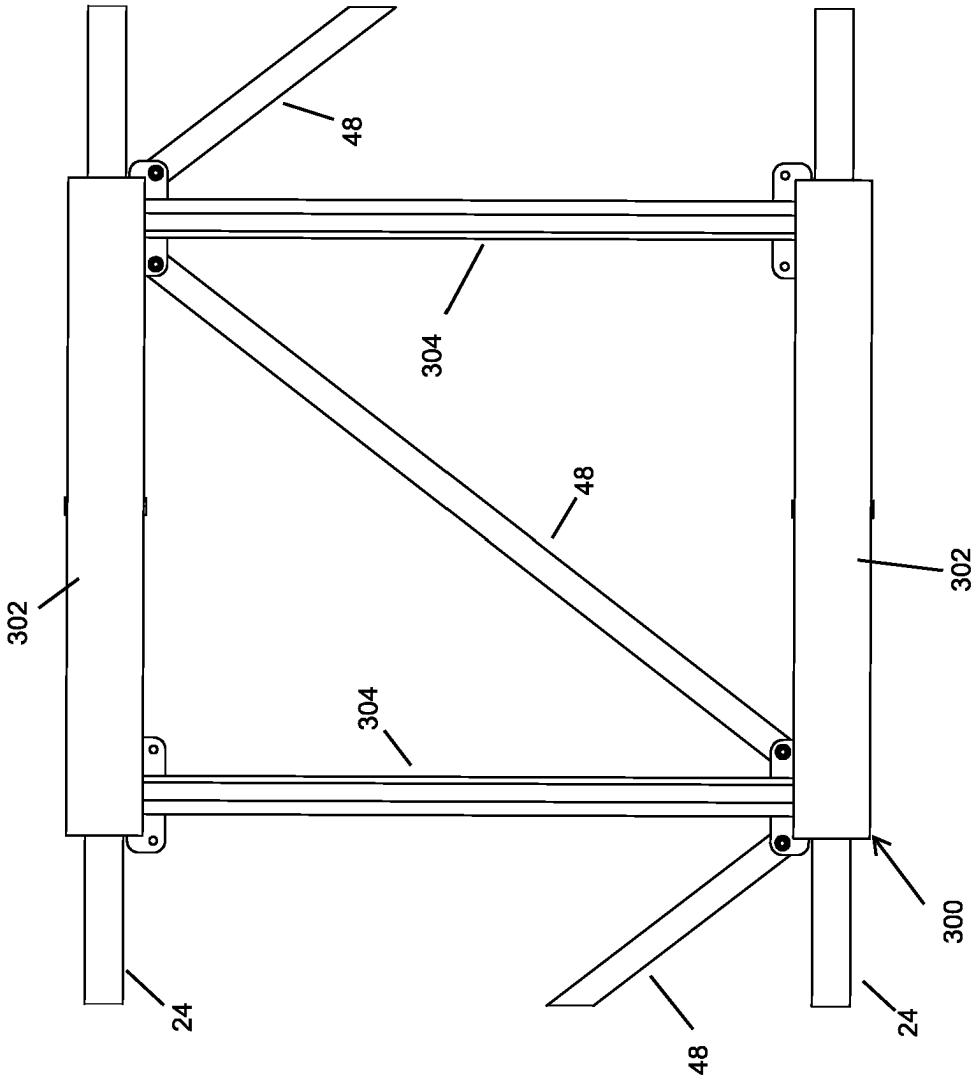

FIG. 66

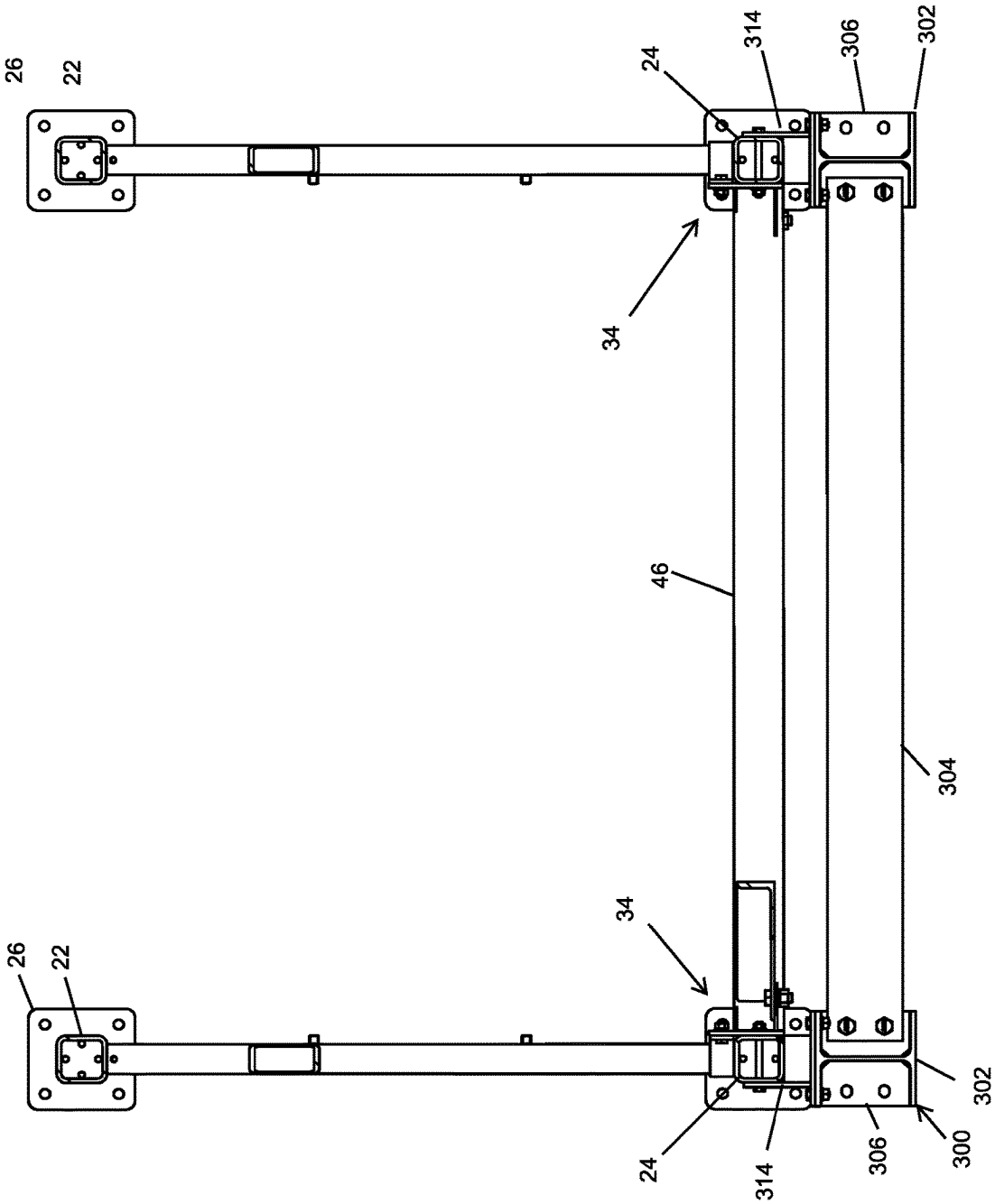

FIG. 67

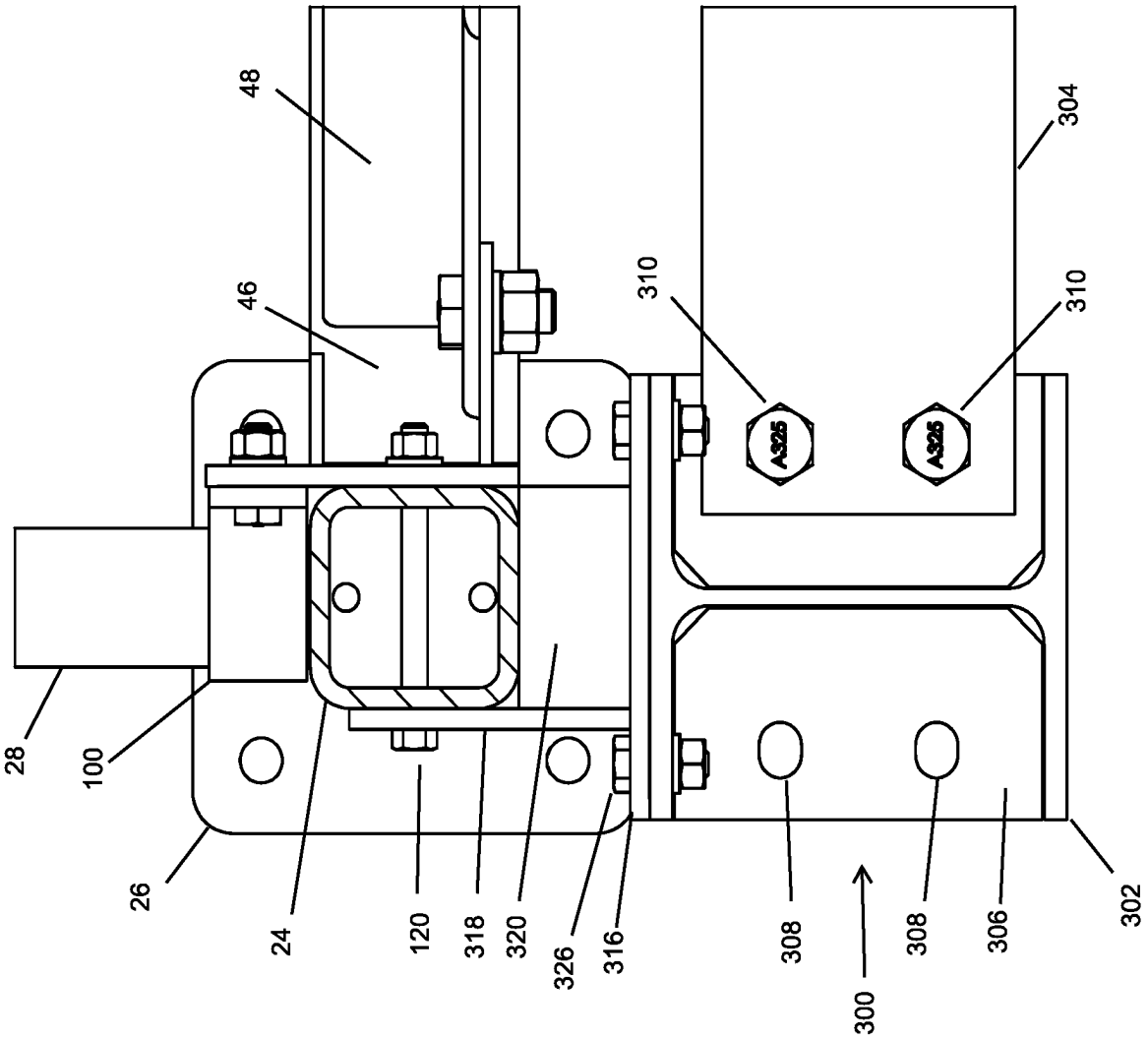
48
46
28
100
26
24
120
318
320
326
316
310
A325
A325
310
304
308
308
306
300
302

FIG. 68

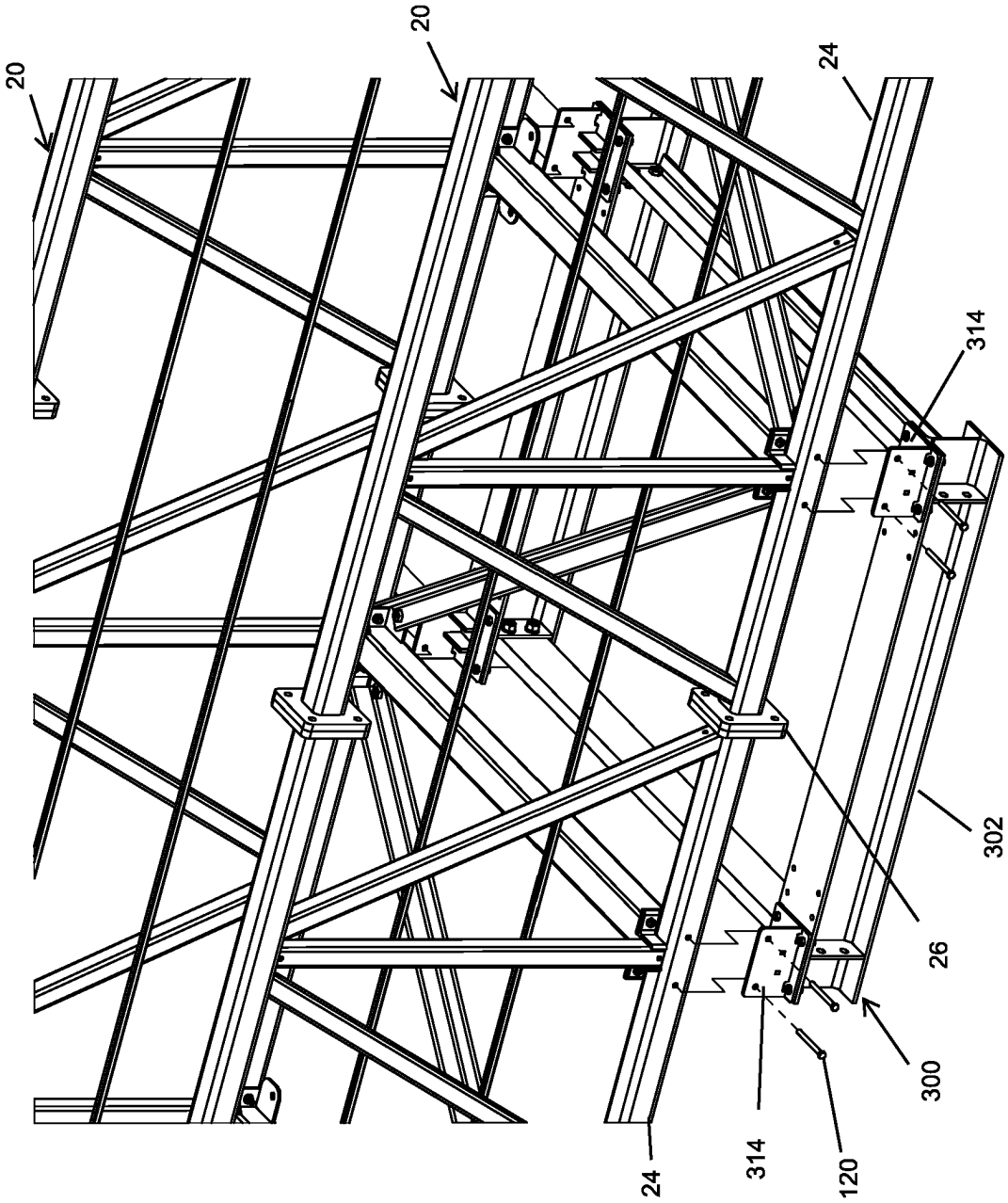

FIG. 69

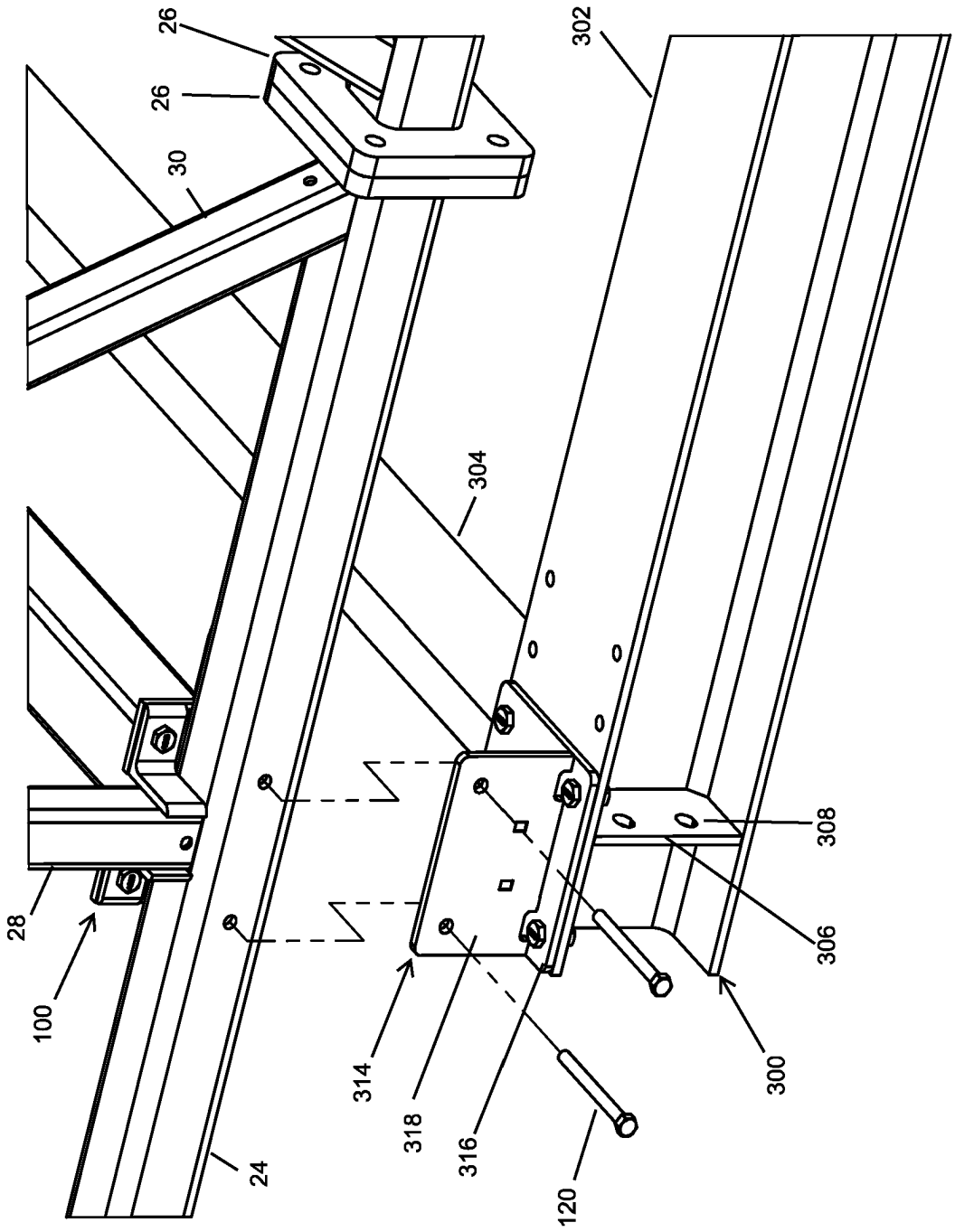

FIG. 70

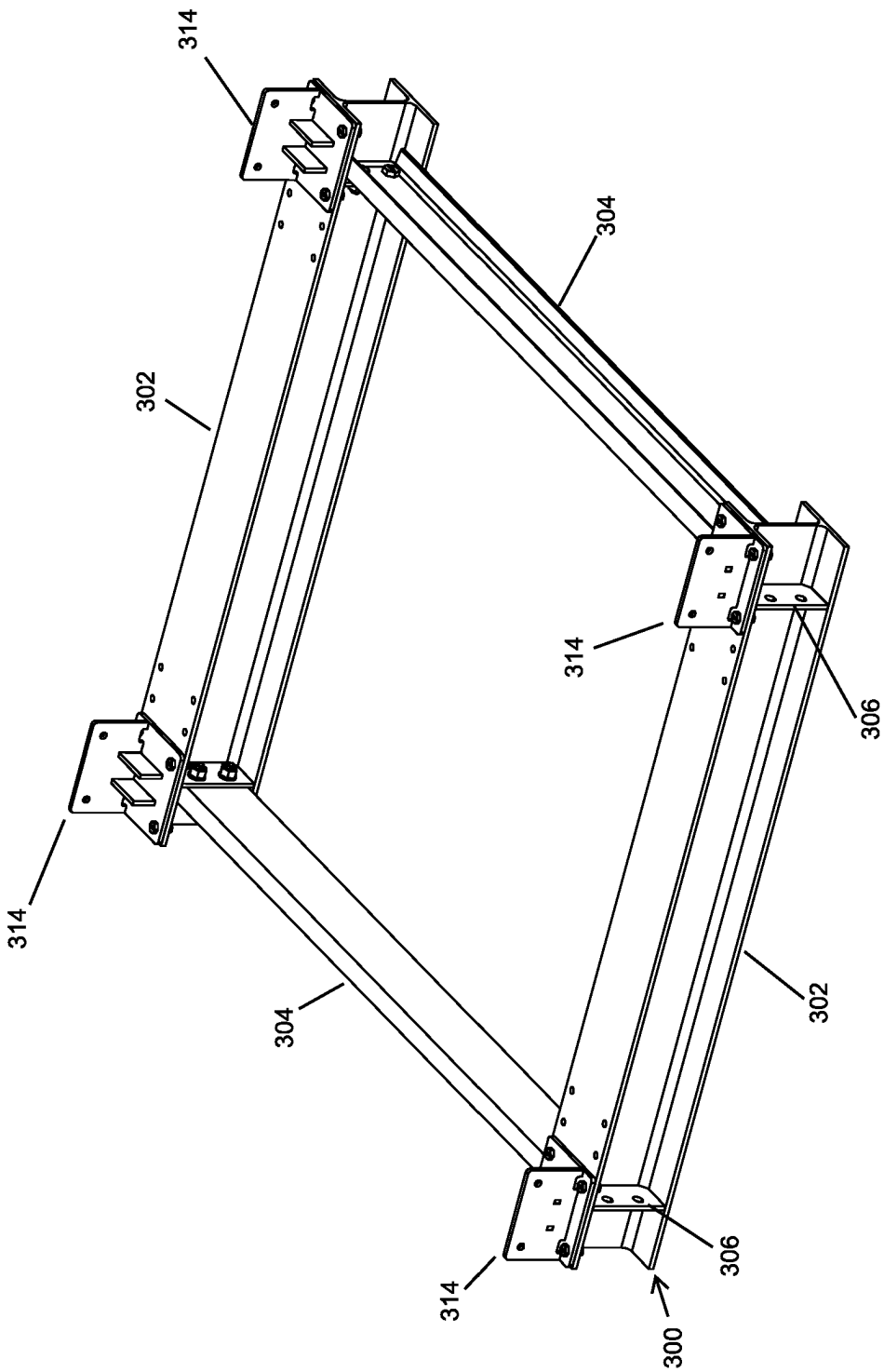

FIG. 71

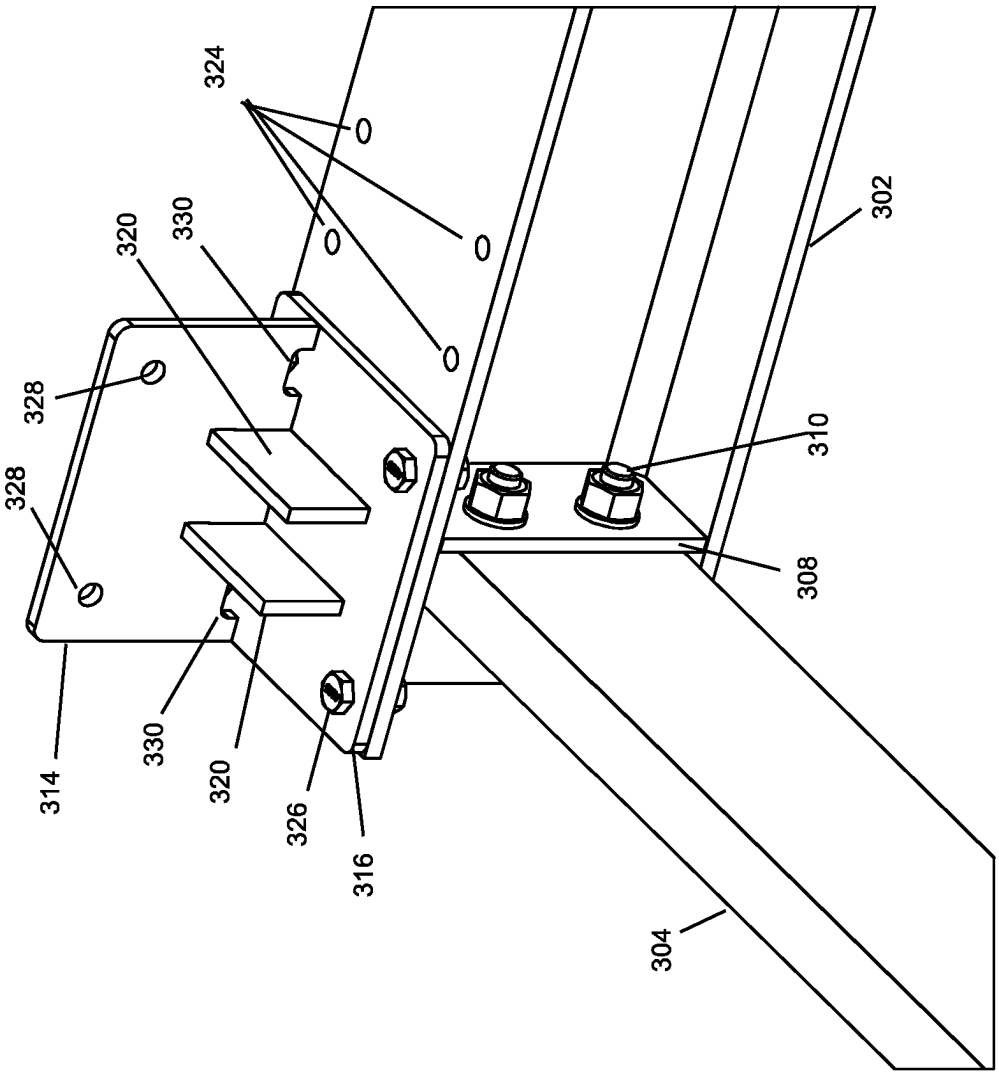

FIG. 72

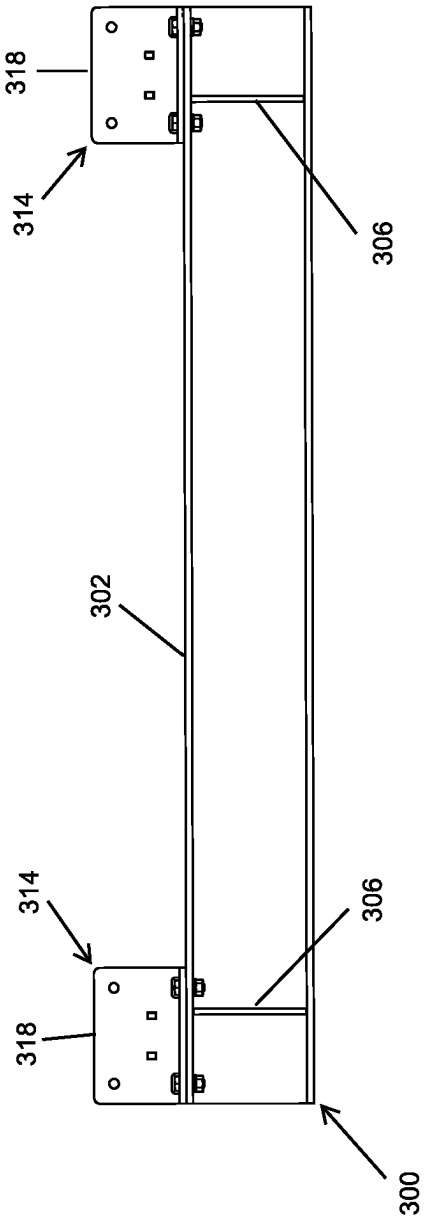

FIG. 73

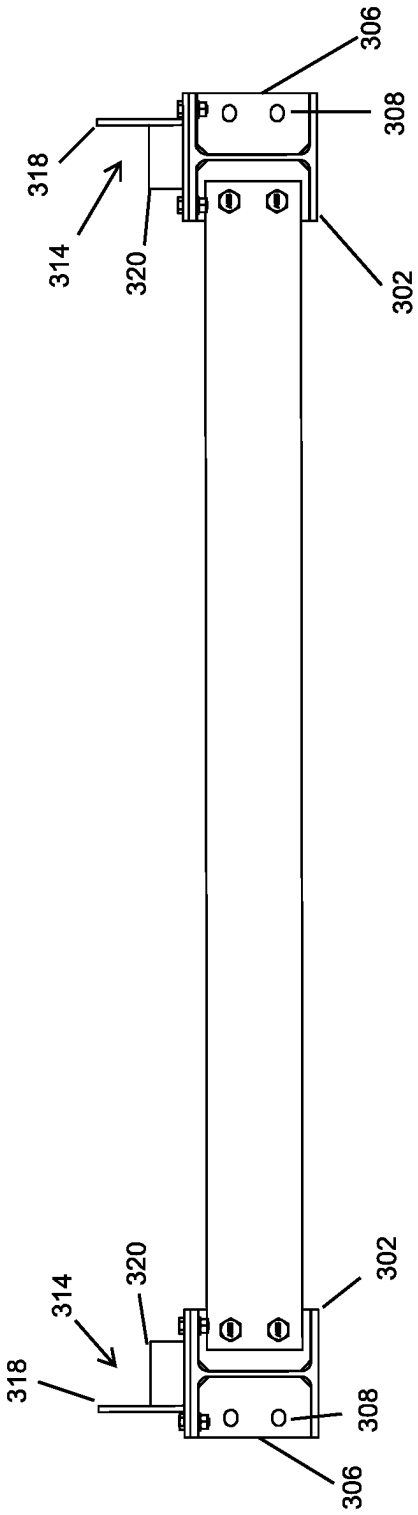

FIG. 74

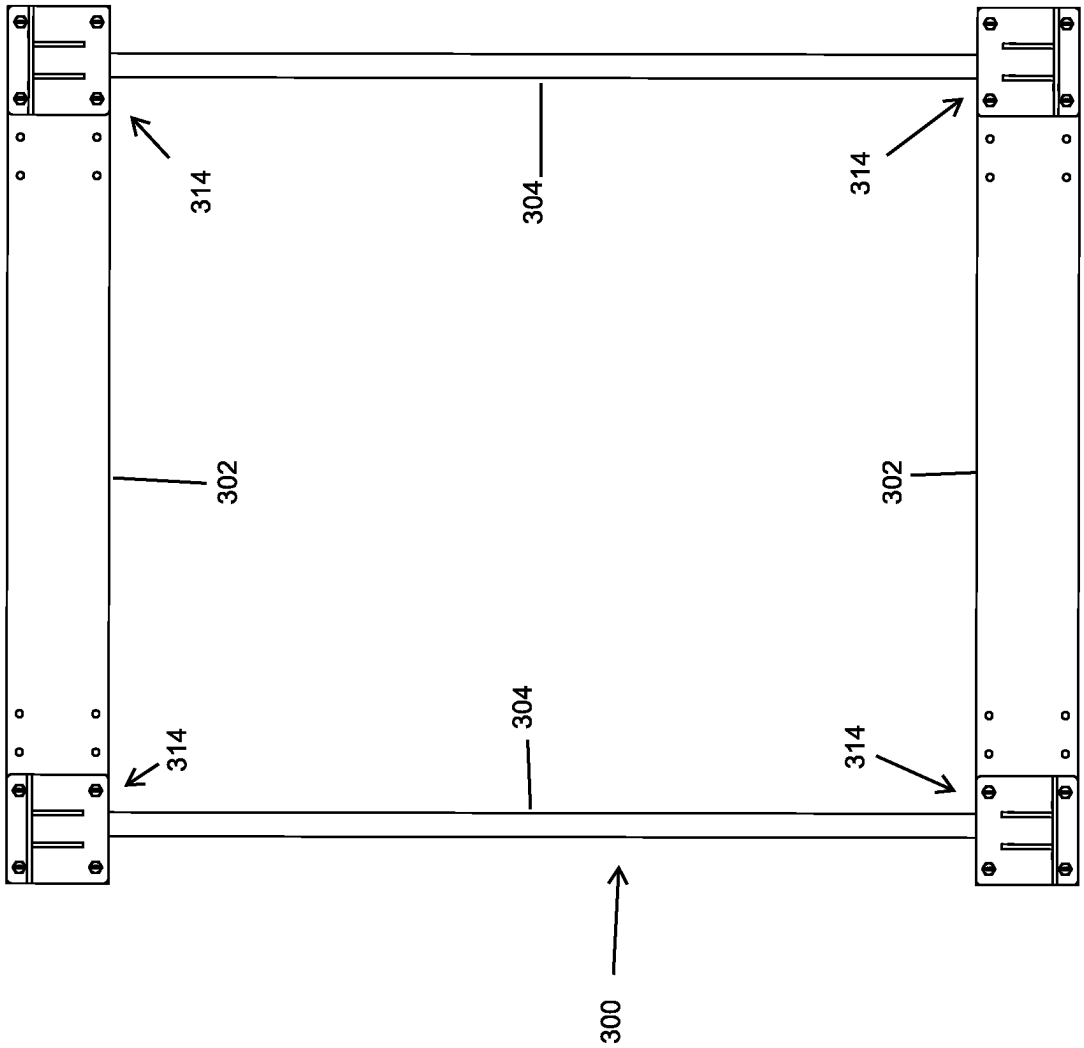

FIG. 75

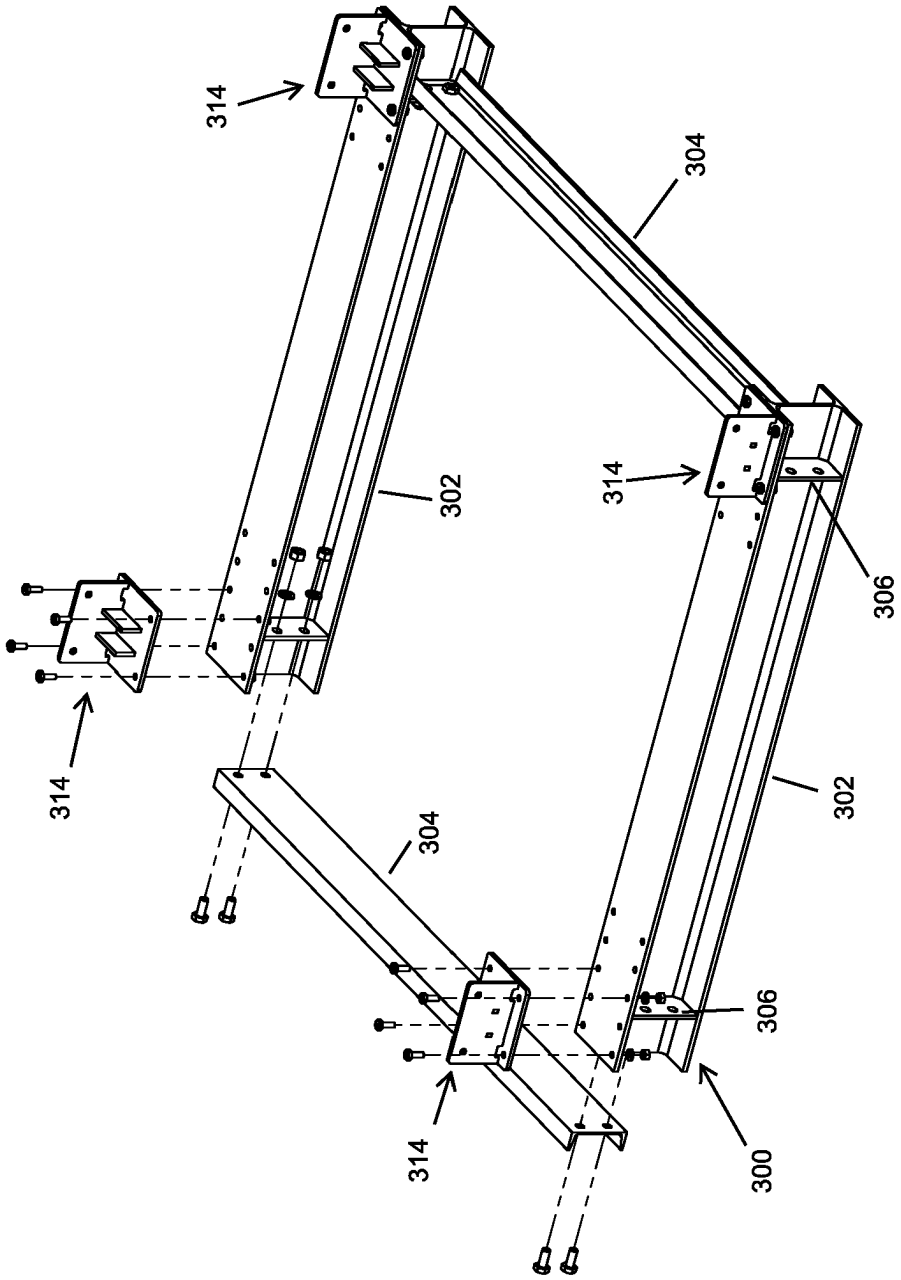

FIG. 76

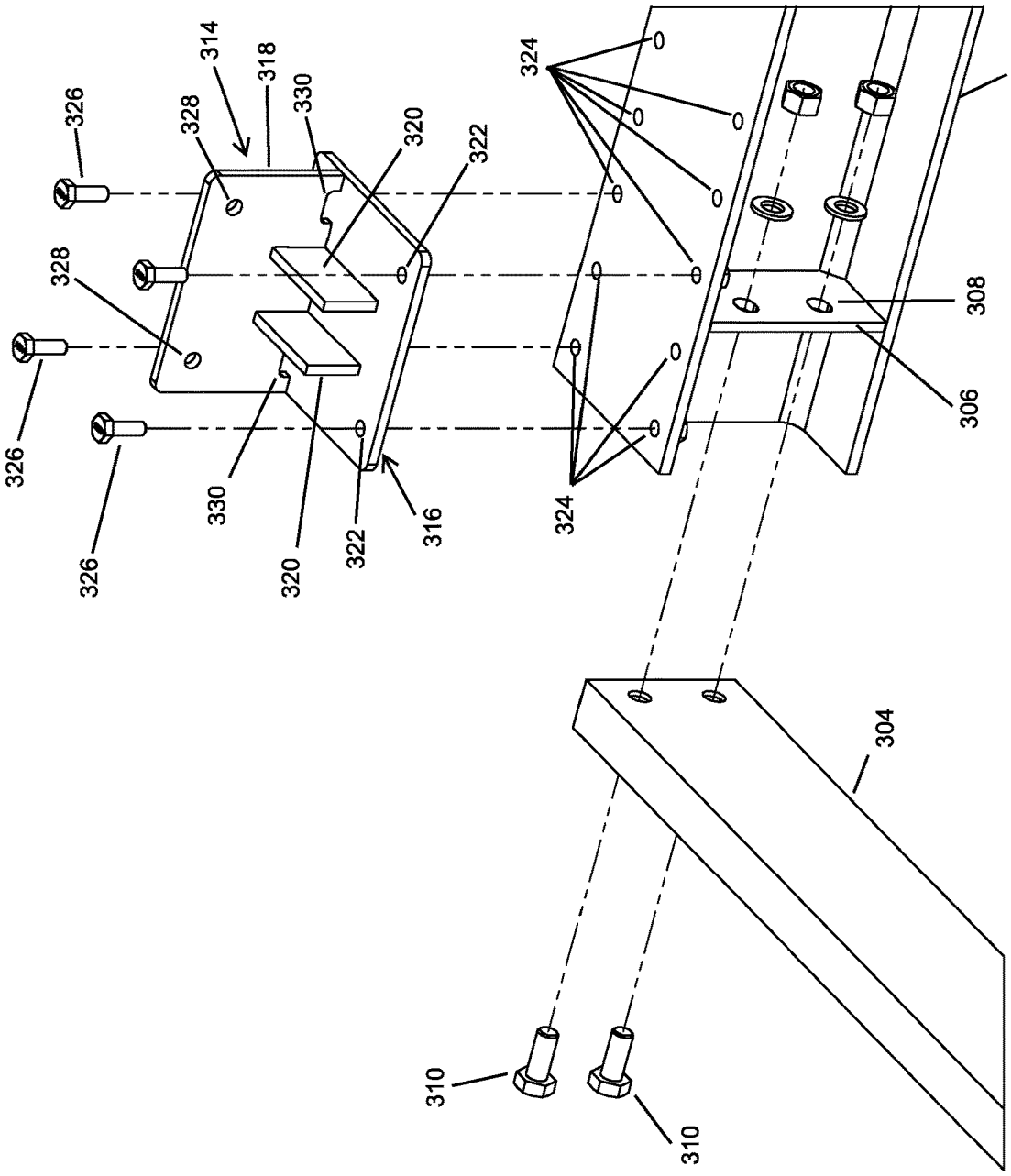

FIG. 77

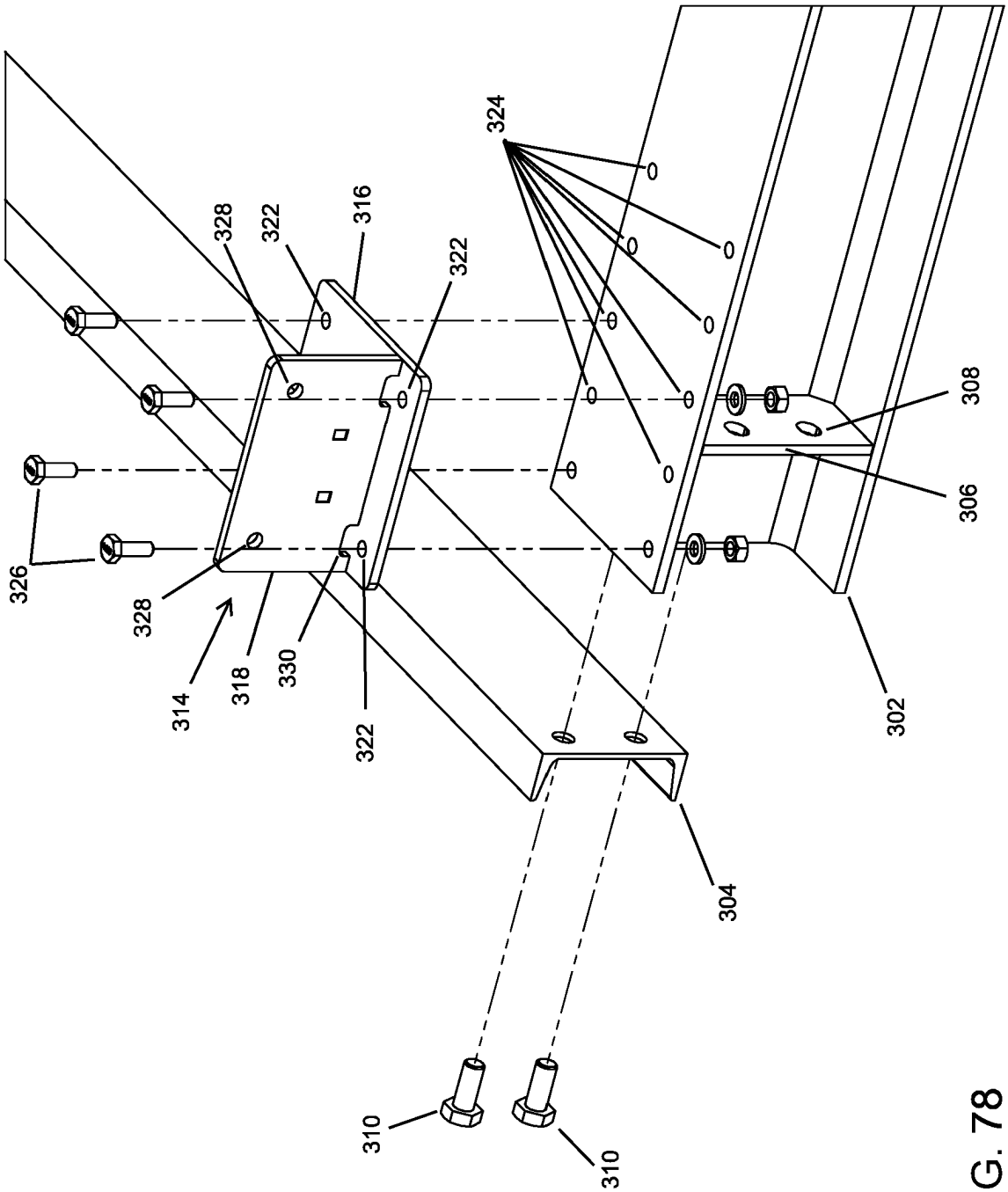
326
328
314
318
330
322
328
322
316
322
324
308
306
302
304
310
310

FIG. 78

CATWALK FLOORBEAM CONNECTION SYSTEM

CROSS REFERENCE TO RELATED APPLICATIONS

This application is a continuation of U.S. application Ser. No. 15/886,929 which was filed on Feb. 2, 2018, which claims priority to U.S. Provisional Application 62/454,390 which was filed on Feb. 3, 2017, the entirety of each is hereby incorporated fully by reference herein.

FIELD

This disclosure relates to catwalks. More specifically and without limitation, this disclosure relates to a catwalk floorbeam connection system used in agricultural applications, as well as other industrial applications.

OVERVIEW

Grain bins are massive structures used to store bulk flowable grain products such as corn, soybeans, wheat, rice, or any other grain products. Conventional grain bins are generally formed in a cylindrical shape with a corrugated sidewall covered by a peaked roof. Grain bins vary in height (ranging from twenty feet high to well over a hundred and fifty feet high), and vary in diameter (ranging from eighteen feet in diameter to well over a hundred and fifty feet in diameter). The storage capacity of modern grain bins can range anywhere from a few thousand bushels to well over a million bushels.

Many grain storage and transport facilities, such as commercial elevators, utilize a plurality of grain bins. These grain bins are often connected to one another by a catwalk system that supports grain handling equipment, such as a conveyor or grain carrying belt. These catwalk systems also provide a pathway for access, maintenance and inspection purposes.

There are a number of manufacturers of catwalk systems including: LeMar Industries, a subsidiary of CTB, Inc., having an address of 2070 NE 60th Ave., Des Moines, IA 50313; Brownie Systems, a division of Global Industries, Inc., having an address of MFS/York/Stormor, 2928 E. Hwy 30, Grand Island, NE 6880; and GSI Group, a brand of AGCO Corporation having an address of 4205 River Green Parkway, Duluth, GA 30096, among many others. While the prior art systems are effective in various ways, they suffer from many disadvantages.

Namely, the prior art catwalk systems are overly complicated to assemble in the field. Prior art catwalk systems are formed of a great number of parts that must be assembled in the sometimes less than optimal conditions in the field. Prior art catwalk systems require a great number of parts or pieces that must be installed correctly otherwise the resulting assembly will be defective. Prior art catwalk systems are overly time consuming to assemble in the field and require complex assembly steps and excessive labor. In addition, due to their complexity, prior art catwalk systems are susceptible to improper assembly. Even when these prior art catwalk systems are assembled they are less rigid and robust as may be desirable.

Therefore, for all the reasons stated above, and the reasons stated below, there is a need in the art for an improved catwalk floorbeam connection system for use in association with agricultural applications and other industrial applications.

Thus, it is a primary object of at least one embodiment to provide a catwalk floorbeam connection system that improves upon the state of the art.

Another object of at least one embodiment is to provide a catwalk floorbeam connection system that is easy to assemble.

Yet another object of at least one embodiment is to provide a catwalk floorbeam connection system that reduces the labor required to assemble.

Another object of at least one embodiment is to provide a catwalk floorbeam connection system that reduces assembly errors.

Yet another object of at least one embodiment is to provide a catwalk floorbeam connection system that speeds the assembly process over prior art systems.

Another object of at least one embodiment is to provide a catwalk floorbeam connection system that is less susceptible to improper assembly.

Yet another object of at least one embodiment is to provide a catwalk floorbeam connection system that is durable.

Another object of at least one embodiment is to provide a catwalk floorbeam connection system that has a long useful life.

Yet another object of at least one embodiment is to provide a catwalk floorbeam connection system that is rigid.

Another object of at least one embodiment is to provide a catwalk floorbeam connection system that can be used in a great number of applications.

Yet another object of at least one embodiment is to provide a catwalk floorbeam connection system that can be used with a wide variety of equipment.

Another object of at least one embodiment is to provide a catwalk floorbeam connection system that is relatively inexpensive.

Yet another object of at least one embodiment is to provide a catwalk floorbeam connection system that is easy to manufacture.

Another object of at least one embodiment is to provide a catwalk floorbeam connection system that has a robust design.

Yet another object of at least one embodiment is to provide a catwalk floorbeam connection system that is high quality.

Another object of at least one embodiment is to provide a catwalk floorbeam connection system that can be used with any grain bin.

Yet another object of at least one embodiment is to provide a catwalk floorbeam connection system that is dimensionally accurate.

Another object of at least one embodiment is to provide a catwalk floorbeam connection system that eliminates the need to weld in the field.

Yet another object of at least one embodiment is to provide a catwalk floorbeam connection system that has tight dimensional tolerances.

Another object of at least one embodiment is to provide a catwalk floorbeam connection system that allows catwalks to be shipped in a disassembled state and assembled on site.

Yet another object of at least one embodiment is to provide a catwalk floorbeam connection system that reduces shipping costs.

Another object of at least one embodiment is to provide a catwalk floorbeam connection system that provides a pocket that receives an end of the floorbeams therein.

These and other objects, features, or advantages of at least one embodiment will become apparent from the specification, figures and claims.

SUMMARY

A catwalk floorbeam connection system having a pair of side trusses formed of a top cord and bottom cord connected by a plurality of vertical posts and diagonal posts is presented. The bottom cords have a plurality of joints formed of a bottom plate, opposing side plates and wing plates that form a pocket. These pockets receive an end of floorbeams which are bolted to holes in the side plates. The bottom plate also includes a wind brace section that receives an end of a diagonal wind brace therein. The fabricated side trusses are shipped to the job site where the catwalk is quickly and easily assembled by aligning a pair of side trusses in parallel space alignment and installing floorbeams in the pockets of opposing joints. To provide additional rigidity diagonal wind braces are installed in a zig-zag formation between diagonally opposite joints. This arrangement provides a quickly assembled, high quality, rigid and durable catwalk that requires a minimum number of assembly steps.

BRIEF DESCRIPTION OF THE DRAWINGS

FIG. **1** is an elevation view of a grain storage facility having a plurality of grain bins connected by a catwalk system;

FIG. **2** is a perspective view of a section of assembled catwalk formed of three pairs of side trusses connected together;

FIG. **3** is a perspective view of a section of assembled catwalk formed of a single pair of side trusses connected together;

FIG. **4** is a perspective view of a section of assembled catwalk, the view showing the catwalk supported by a vertical support;

FIG. **5** is a perspective view of single side truss, the view showing a top cord and bottom cord connected together by a plurality of vertical posts and diagonal posts, the view also shows joints connected to the bottom cord that form pockets;

FIG. **6** is a side elevation view of single side truss, the view showing a top cord and bottom cord connected together by a plurality of vertical posts and diagonal posts, the view also shows joints connected to the bottom cord that form pockets;

FIG. **7** is a close-up side elevation view of a joint connected to the bottom cord, the view showing the bottom plate connected to the bottom cord, a pair of side plates connected to the bottom plate, bottom cord and vertical post; the view showing a pair of wing plates connected to the bottom cord and a side plate;

FIG. **8** is a top elevation view of single side truss, the view showing a pair of joints connected to the bottom cord that form pockets;

FIG. **9** is a close-up top elevation view of a joint connected to the bottom cord, the view showing the bottom plate connected to the bottom cord, a pair of side plates connected to the bottom plate and the bottom cord; the view showing a pair of wing plates connected to the bottom cord and a side plate;

FIG. **10** is a close-up perspective view of a joint connected to the bottom cord, the view showing the bottom plate connected to the bottom cord, a pair of side plates connected to the bottom plate, bottom cord and vertical post; the view showing a pair of wing plates connected to the bottom cord and a side plate, the view also showing the side plates having tabs and the vertical post having a drain hole;

FIG. **11** is a bottom elevation view of single side truss, the view showing a pair of joints connected to the bottom cord that form pockets;

FIG. **12** is a close-up bottom elevation view of a joint connected to the bottom cord, the view showing the bottom plate connected to the bottom cord, a pair of side plates connected to the bottom plate; the view showing a pair of alignment slots in the bottom plate for each side plate, the view also showing ears of side plate **38** positioned within the alignment slots of the bottom plate;

FIG. **13** is a perspective view of single side truss, the view showing a top cord and bottom cord connected together by a plurality of vertical posts and diagonal posts, the view also shows joints connected to the bottom cord that form pockets;

FIG. **14** is a close-up bottom perspective view of a joint connected to the bottom cord, the view showing the bottom plate connected to the bottom cord, a pair of side plates connected to the bottom plate; the view showing a pair of alignment slots in the bottom plate for each side plate, the view also showing ears of side plate **38** positioned within the alignment slots of the bottom plate;

FIG. **15** is a close up side cut-away elevation view of a joint connected to the bottom cord, the view showing the bottom plate connected to the bottom cord, a side plate connected to the bottom plate; the view showing an end plate and a diagonal post connected to the bottom cord;

FIG. **16** is a perspective view of a section of assembled catwalk;

FIG. **17** is a close-up perspective view of a joint connected to a bottom cord, the view showing the bottom plate connected to the bottom cord and a pair of side plates connected to the bottom plate that form a pocket; the view showing a floorbeam in place within the pocket and a pair of diagonal wind braces bolted to the bottom plate;

FIG. **18** is a bottom elevation view of a section of assembled catwalk;

FIG. **19** is a top elevation view of a section of assembled catwalk;

FIG. **20** is a close-up top elevation view of a joint connected to a bottom cord, the view showing the bottom plate connected to the bottom cord and a pair of side plates connected to the bottom plate that form a pocket; the view showing a floorbeam in place within the pocket and a pair of diagonal wind braces bolted to the bottom plate, the view also showing the relief in the pocket to facilitate drainage;

FIG. **21** is a close up side cut-away elevation view of a joint connected to the bottom cord, the view showing the bottom plate connected to the bottom cord, a side plate connected to the bottom plate; the view showing an end plate and a diagonal post connected to the bottom cord, the view showing a diagonal wind brace connected to the bottom plate;

FIG. **22** is a perspective view of a section of assembled catwalk, the view showing a floorbeam aligned with and positioned just above a pair of pockets just prior to insertion into the opposing pockets of opposing joints; the view also showing bolts aligned with holes in the side plates of the joint, the bolts configured to affix the floorbeam to the side plates;

FIG. **23** is a close-up perspective view of a joint, the view showing a floorbeam aligned with and positioned just above a pocket just prior to insertion into the pocket of the joint; the view also showing bolts aligned with holes in the side plates of the joint, the bolts configured to affix the floorbeam to the side plates;

FIG. **24** is a close-up perspective view of a joint, the view showing a floorbeam aligned with and positioned just above a pocket just prior to insertion into the pocket of the joint; the view also showing bolts aligned with holes in the side plates of the joint, the bolts configured to affix the floorbeam to the side plates.

FIG. **25** is a perspective view of a section of assembled catwalk where the opposing side trusses are connected to one another using a side floorbeam connection system, the view showing a floorbeam aligned with and positioned just inward from vertical posts that extend between the bottom cord and top cord of a side truss;

FIG. **26** is a close up perspective view of a side connection joint that connects floorbeams across opposing bottom cords of side trusses, the view showing a floorbeam having an end plate connected to the end of the floorbeam along with a pair of bottom plates and a pair of side supports; the view showing the end plate bolted to a pair of clip angles positioned outward of a vertical post; the view also showing the end plate bolted to the bottom cord of the side truss; the view showing diagonal wind braces connecting to bottom plates of the joints; the view showing side supports connected between the end of the floorbeam and the end plate;

FIG. **27** is a bottom elevation view of a portion of a catwalk system having a side connection joint that connects floorbeams across opposing bottom cords of side trusses, the view showing a floorbeam having an end plate connected to the end of the floorbeam along with a pair of bottom plates; the view also showing the end plate bolted to the bottom cord of the side truss; the view showing diagonal wind braces connecting to bottom plates of the joints;

FIG. **28** is a top elevation view of a portion of a catwalk system having a side connection joint that connects floorbeams across opposing bottom cords of side trusses, the view showing a floorbeam having an end plate connected to the end of the floorbeam along with a pair of bottom plates; the view also showing the end plate bolted to the bottom cord of the side truss; the view showing diagonal wind braces connecting to bottom plates of the joints;

FIG. **29** is a close up top elevation view of a side connection joint that connects floorbeams across opposing bottom cords of side trusses, the view showing a floorbeam having an end plate connected to the end of the floorbeam along with a pair of bottom plates; the view also showing the end plate bolted to the bottom cord of the side truss; the view showing diagonal wind braces connecting to bottom plates of the joints; the view showing side supports connected between the end of the floorbeam and the end plate;

FIG. **30** is a close up side elevation view along the length of the catwalk, the view showing a side connection joint that connects floorbeams across opposing bottom cords of side trusses; the view showing a floorbeam having an end plate connected to the end of the floorbeam along with a bottom plate; the view also showing the end plate bolted to the bottom cord of the side truss; the view showing side supports connected between the end of the floorbeam and the end plate; the view showing a clip angle positioned at the intersection of the bottom cord and a vertical post; the view showing the end plate of the floorbeam bolted to the clip angle and through the bottom cord; the view showing the bottom surface of the bottom plate terminating a distance "D" above the lower surface of the floorbeam and the bottom cord to provide room for a fastener that connects diagonal wind brace to the bottom plate;

FIG. **31** is a perspective exploded view of a section of assembled catwalk where the opposing side trusses are connected to one another using a side floorbeam connection system, the view showing a floorbeam aligned with and positioned just inward from vertical posts that extend between the bottom cord and top cord of a side truss; the view showing the floorbeams in exploded form separated from the bottom cords of opposing side trusses;

FIG. **32** is a close up perspective exploded view showing a side connection joint that connects floorbeams across opposing bottom cords of side trusses; the view showing a floorbeam having an end plate connected to the end of the floorbeam along with bottom plates and side supports; the view also showing the end plate about to be bolted to the bottom cord of the side truss; the view showing side supports connected between the end of the floorbeam and the end plate; the view showing a clip angle positioned at the intersection of the bottom cord and a vertical post; the view showing the end plate of the floorbeam about to be bolted to the clip angles and through the bottom cord;

FIG. **33** is another perspective exploded view showing a side connection joint that connects floorbeams across opposing bottom cords of side trusses; the view showing a floorbeam having an end plate connected to the end of the floorbeam along with bottom plates; the view also showing the end plate about to be bolted to the bottom cord of the side truss; the view showing a pair of clip angles positioned at the intersection of the bottom cord and a vertical post; the view showing the end plate of the floorbeam about to be bolted to the clip angles and through the bottom cord;

FIG. **34** is another perspective exploded view showing a side connection joint that connects floorbeams across opposing bottom cords of side trusses; the view showing a floorbeam having an end plate connected to the end of the floorbeam along with bottom plates; the view also showing the end plate about to be bolted to the bottom cord of the side truss; the view showing a pair of clip angles positioned at the intersection of the bottom cord and a vertical post; the view showing the end plate of the floorbeam about to be bolted to the clip angles and through the bottom cord;

FIG. **35** is a perspective view of the interior surface of a side truss having a bottom cord and a top cord connected by a plurality of vertical posts and diagonal posts; the view also showing a side connection system that includes a pair of clip angles positioned at the lower end of the vertical posts;

FIG. **36** is a close up perspective view of the interior surface of a side truss; the view showing a side connection system that includes a pair of clip angles positioned at the lower end of the vertical posts; the view showing holes in the clip angles as well as holes in the bottom cord that facilitate connection of the floorbeam to the side truss;

FIG. **37** is an elevation view of the interior surface of a side truss having a bottom cord and a top cord connected by a plurality of vertical posts and diagonal posts; the view also showing a side connection system that includes a pair of clip angles positioned at the lower end of the vertical posts;

FIG. **38** is a close up elevation view along the length of the bottom cord, the view showing a side connection system that includes a pair of clip angles positioned at the lower end of the vertical posts; the view showing the interior surface of a side truss in alignment with the exterior facing surface of the clip angles so as to allow for flat engagement of an end plate;

FIG. **39** is a close up top elevation view along the length of the center post, the view showing a side connection system that includes a pair of clip angles positioned at the lower end of the vertical post; the view showing the interior surface of a side truss in alignment with the exterior facing surface of the clip angles so as to allow for flat engagement of an end plate

FIG. **40** is a perspective view of a floorbeam for use in the side connection system, the view showing the floorbeam formed of an elongated square or rectangular tube; the view showing an end plate connected to the ends of the floorbeam; the view showing a bottom plate and side support connected to and extending between the end plate and the end of the floorbeam;

FIG. **41** is a top elevation view of the floor support shown in FIG. **40**;

FIG. **42** is a side elevation view of the floor support shown in FIG. **41**;

FIG. **43** is a bottom elevation view of the floor support shown in FIG. **42**;

FIG. **44** is an elevation view of the end of the end plate of the floor support shown in FIG. **43**; the view showing the recess and notch in the upper surface of the end plate the facilitates the drainage of water and debris;

FIG. **45** is a perspective view of the end plate of the floor support shown in FIG. **44**; the view showing the recess and notch in the upper surface of the end plate the facilitates the drainage of water and debris;

FIG. **46** is a perspective view of the end plate of the floor support shown in FIG. **45**;

FIG. **47** is a top perspective view of a section of assembled catwalk where the opposing side trusses are connected to one another using a side floorbeam connection system, the view showing a floorbeam aligned with and positioned just inward from vertical posts that extend between the bottom cord and top cord of the side trusses; the view showing a support member, in the form of an I-beam, extending under the bottom cords of the side trusses; the view showing a rocker bearing attached to the upper surface of the support member; the view showing the rocker bearings formed of a bottom section and a top section that rotate with respect to one another; the view showing the bottom surface of the bottom section of the rocker bearings engaging the upper surface of the support member; the view showing the upper surface of the top section of the rocker bearings engaging the lower surface of the bottom cord of the side trusses;

FIG. **48** is a close up top perspective view of the end of the support member and the forward positioned rocker bearing as shown in FIG. **47**;

FIG. **49** is a bottom perspective view of the section of assembled catwalk and rocker bearing system and support member shown in FIG. **47**;

FIG. **50** is a close up bottom perspective view of the end of the support member and the forward positioned rocker bearing as shown in FIG. **49**;

FIG. **51** is a close up bottom perspective view of the end of the support member and the rearward positioned rocker bearing as shown in FIG. **49**;

FIG. **52** is a side elevation view of a section of assembled catwalk using a side floorbeam connection system, the view showing a support member, in the form of an I-beam, extending under the bottom cords of the side trusses; the view showing a rocker bearing attached to the upper surface of the support member; the view showing the rocker bearing formed of a bottom section and a top section that rotate with respect to one another; the view showing the bottom surface of the bottom section of the rocker bearings engaging the upper surface of the support member; the view showing the upper surface of the top section of the rocker bearings engaging the lower surface of the bottom cord of the side truss; the view showing the side truss extending in a generally horizontal manner;

FIG. **53** is a side elevation view of a section of assembled catwalk using a side floorbeam connection system, as is shown in FIG. **52** with the difference being the view showing the catwalk system extending at an angle to horizontal demonstrating the angular variation that the rocker bearing supports;

FIG. **54** is a side elevation view of the rocker bearing system shown in FIGS. **47-53**; the view along the bottom cord of a side truss; the view showing a rocker bearing attached to the upper surface of the support member; the view showing the rocker bearing formed of a bottom section and a top section that rotate with respect to one another; the view showing the bottom surface of the bottom section of the rocker bearing engaging the upper surface of the support member; the view showing the upper surface of the top section of the rocker bearing engaging the lower surface of the bottom cord of the side truss; the view showing the interior facing surface of the upper end of the forward plate in engagement with the outward facing surface of the bottom cord thereby holding the catwalk system within and upon the upper surface of the rocker bearing;

FIG. **55** is a close up top perspective view of a rocker bearing as is shown in FIGS. **47-54**, the view showing the rocker bearing formed of a bottom section and a top section that rotate with respect to one another; the view showing the bottom section having a bottom plate and a pair of end plates that extend upwardly from the bottom plate and receive a rocker pin that facilitates rotation of the top section with respect to the bottom section; the view showing the top section having a top plate, and a forward plate and a rearward plate that extend downward from the top plate and receive a rocker pin that engages a recess in the upper surface of the end plates; the view also showing the upper end of the forward plate extending a distance above the top plate to form a lip that engages and retains the bottom cord of a side truss;

FIG. **56** is a close up bottom perspective view of a rocker bearing as is shown in FIG. **55** the view showing the rocker bearing formed of a bottom section and a top section that rotate with respect to one another; the view showing the bottom section having a bottom plate and a pair of end plates that extend upwardly from the bottom plate and receive a rocker pin that facilitates rotation of the top section with respect to the bottom section; the view showing the top section having a top plate, and a forward plate and a rearward plate that extend downward from the top plate and receive a rocker pin that engages a recess in the upper surface of the end plates; the view also showing the upper end of the forward plate extending a distance above the top plate to form a lip that engages and retains the bottom cord of a side truss;

FIG. **57** is an exploded perspective top view of the rocker bearing as is shown in FIGS. **55** and **56**, the view showing the top section separated from the bottom section; the view showing the recess in the end plates of the bottom section that is configured to receive the bearing surfaces of the rocker pin of the top plate; the view showing the stiffener that extends between the bottom plate and end plates and terminates at or just before the recess in the end plates;

FIG. **58** is an exploded perspective bottom view of the rocker bearing as is shown in FIG. **57**, the view showing the top section separated from the bottom section; the view showing the recess in the end plates of the bottom section that is configured to receive the bearing surfaces of the rocker pin of the top plate; the view showing the stiffener that extends between the bottom plate and end plates and terminates at or just before the recess in the end plates;

FIG. **59** is a side elevation view of the front side of the rocker bearing as is shown in FIGS. **55-58**;

FIG. **60** is a side elevation view of the side of the rocker bearing as is shown in FIGS. **55-59**;

FIG. **61** is a top elevation view of the rocker bearing as is shown in FIGS. **55-60**;

FIG. **62** is a bottom elevation view of the rocker bearing as is shown in FIGS. **55-61**;

FIG. **63** is a perspective view of a spreader beam kit formed of a pair of opposing spreader beams and a pair of opposing cross braces that connect to one another, the view showing the spreader beams resting upon a support member that is itself supported by a pair of legs; the view showing the spreader beams connected to the bottom cord of side trusses at joints by mounting brackets that are positioned below vertical posts that extend between top cords and bottom cords of side trusses;

FIG. **64** is a side elevation view of a spreader beam kit formed of a pair of opposing spreader beams and a pair of opposing cross braces that connect to one another, the view showing the spreader beam connected to a bottom cord of a side trusses at a pair of joints by a mounting bracket that are positioned below a vertical post that extends between top cords and bottom cords of the side truss;

FIG. **65** is a top elevation view of a spreader beam kit formed of a pair of opposing spreader beams and a pair of opposing cross braces that connect to one another, the view showing the spreader beams connected to a bottom cord of a side trusses at a pair of joints by a mounting bracket; the view showing floorbeams extending between opposing side trusses at joints; the view also showing diagonal wind braces **48** extending at an angle between opposing side trusses between opposing joints;

FIG. **66** is a bottom elevation view of what is shown in FIG. **65**;

FIG. **67** is an elevation view along the length of the catwalk, the view showing a spreader beam kit formed of a pair of opposing spreader beams and a pair of opposing cross braces that connect to one another; the view showing the spreader beams connected to a bottom cord of opposing side trusses at a pair of joints by a mounting bracket; the view showing floorbeams extending between opposing side trusses at joints;

FIG. **68** is a close up elevation view along the length of the catwalk, the view showing the connection between a spreader beam and a bottom cord of a side truss, the view showing a spreader beam formed of an I-beam having a generally flat upper and lower surface separated by a center wall that forms a channel along each side of the center wall; the view showing a flange positioned within the channel between the inward facing surfaces of the upper and lower walls and the center wall; the view showing a cross brace connected to the inward position flange; the view showing a mounting bracket connected to the upper surface of the spreader beam; the view showing the mounting bracket having a bottom plate, a side plate and a center plate; the view showing a bottom cord of a side truss connected to the mounting bracket with the bottom surface of the bottom cord in engagement with the upper surface of the center wall, and the outer surface of the bottom cord in engagement with the interior surface of the upper end of the side plate; the view showing the lower edge of the end plate connected to bottom cord in flat and flush engagement or spaced alignment with the upper surface of the spreader beam;

FIG. **69** is a perspective exploded view of a spreader beam kit formed of a pair of opposing spreader beams and a pair of opposing cross braces that connect to one another, the view showing the mounting brackets and spreader beams exploded from the bottom cord of the catwalk;

FIG. **70** is a close up perspective exploded view of a spreader beam kit formed of a pair of opposing spreader beams and a pair of opposing cross braces that connect to one another, the view showing the mounting brackets and spreader beams exploded from the bottom cord of the catwalk;

FIG. **71** is a perspective view of the top side of a spreader beam kit formed of a pair of opposing spreader beams and a pair of opposing cross braces that connect to one another, the view showing the mounting brackets connected to the upper surface of the spreader beams;

FIG. **72** is a close up perspective view of the top side of a spreader beam kit formed of a pair of opposing spreader beams and a pair of opposing cross braces that connect to one another, the view showing the intersection between a spreader beam and a cross brace; the view showing the end of the cross brace bolted to a flange positioned within the channel of the spreader beam; the view showing a mounting bracket connected to the upper surface of the spreader beam; the view showing the mounting bracket having a bottom plate, a side plate and a pair of center plates plate;

FIG. **73** is a side elevation view of a spreader beam kit formed of a pair of opposing spreader beams and a pair of opposing cross braces that connect to one another, the view showing the side of a spreader beam; the view showing a mounting bracket connected to the upper surface of the spreader beam;

FIG. **74** is a side elevation view of a spreader beam kit formed of a pair of opposing spreader beams and a pair of opposing cross braces that connect to one another, the view showing the side of a cross brace connected at its ends to a pair of opposing spreader beams; the view showing a mounting bracket connected to the upper surface of the spreader beams;

FIG. **75** is a top elevation view of a spreader beam kit formed of a pair of opposing spreader beams and a pair of opposing cross braces that connect to one another, the view showing a mounting bracket connected to the upper surface of the spreader beams at their outward ends;

FIG. **76** is a perspective exploded view of a spreader beam kit formed of a pair of opposing spreader beams and a pair of opposing cross braces that connect to one another, the view showing a mounting bracket connected to the upper surface of the spreader beams at their outward ends; the view showing a pair of brackets and a cross brace in exploded form with related mounting hardware also in exploded form;

FIG. **77** is a close up perspective exploded view of a spreader beam kit formed of a pair of opposing spreader beams and a pair of opposing cross braces that connect to one another, the view showing a brackets and a cross brace in exploded form with related mounting hardware also in exploded form; the view showing the end of the cross brace about to be bolted to a flange positioned within the channel of the spreader beam; the view showing a mounting bracket about to be bolted to the upper surface of the spreader beam; the view showing the mounting bracket having a bottom plate, a side plate and a pair of center plates plate; the view showing the upper surface of the end of the spreader beam having a plurality of sets of holes that allow for adjustability as to where the mounting bracket is installed on the spreader beam;

FIG. **78** is another close up perspective exploded view of a spreader beam kit formed of a pair of opposing spreader beams and a pair of opposing cross braces that connect to one another, the view showing a brackets and a cross brace

in exploded form with related mounting hardware also in exploded form; the view showing the end of the cross brace about to be bolted to a flange positioned within the channel of the spreader beam; the view showing a mounting bracket about to be bolted to the upper surface of the spreader beam; the view showing the mounting bracket having a bottom plate and a side plate; the view showing the upper surface of the end of the spreader beam having a plurality of sets of holes that allow for adjustability as to where the mounting bracket is installed on the spreader beam.

DETAILED DESCRIPTION

In the following detailed description of the embodiments, reference is made to the accompanying drawings which form a part hereof, and in which is shown by way of illustration specific embodiments in which the disclosure may be practiced. The embodiments of the present disclosure described below are not intended to be exhaustive or to limit the disclosure to the precise forms in the following detailed description. Rather, the embodiments are chosen and described so that others skilled in the art may appreciate and understand the principles and practices of the present disclosure. It will be understood by those skilled in the art that various changes in form and details may be made without departing from the principles and scope of the invention. It is intended to cover various modifications and similar arrangements and procedures, and the scope of the appended claims therefore should be accorded the broadest interpretation so as to encompass all such modifications and similar arrangements and procedures. For instance, although aspects and features may be illustrated in or described with reference to certain figures or embodiments, it will be appreciated that features from one figure or embodiment may be combined with features of another figure or embodiment even though the combination is not explicitly shown or explicitly described as a combination. In the depicted embodiments, like reference numbers refer to like elements throughout the various drawings.

It should be understood that any advantages and/or improvements discussed herein may not be provided by some various disclosed embodiments, or implementations thereof. The contemplated embodiments are not so limited and should not be interpreted as being restricted to embodiments which provide such advantages or improvements. Similarly, it should be understood that various embodiments may not address all or any objects of the disclosure or objects of the invention that may be described herein. The contemplated embodiments are not so limited and should not be interpreted as being restricted to embodiments which address such objects of the disclosure or invention. Furthermore, although some disclosed embodiments may be described relative to specific materials, embodiments are not limited to the specific materials or apparatuses but only to their specific characteristics and capabilities and other materials and apparatuses can be substituted as is well understood by those skilled in the art in view of the present disclosure.

It is to be understood that the terms such as "left, right, top, bottom, front, back, side, height, length, width, upper, lower, interior, exterior, inner, outer, and the like as may be used herein, merely describe points of reference and do not limit the present invention to any particular orientation or configuration.

As used herein, the term "or" includes one or more of the associated listed items, such that "A or B" means "either A or B". As used herein, the term "and" includes all combinations of one or more of the associated listed items, such that "A and B" means "A as well as B." The use of "and/or" includes all combinations of one or more of the associated listed items, such that "A and/or B" includes "A but not B," "B but not A," and "A as well as B," unless it is clearly indicated that only a single item, subgroup of items, or all items are present. The use of "etc." is defined as "et cetera" and indicates the inclusion of all other elements belonging to the same group of the preceding items, in any "and/or" combination(s).

As used herein, the singular forms "a," "an," and "the" are intended to include both the singular and plural forms, unless the language explicitly indicates otherwise. Indefinite articles like "a" and "an" introduce or refer to any modified term, both previously-introduced and not, while definite articles like "the" refer to a same previously-introduced term; as such, it is understood that "a" or "an" modify items that are permitted to be previously-introduced or new, while definite articles modify an item that is the same as immediately previously presented. It will be further understood that the terms "comprises," "comprising," "includes," and/or "including," when used herein, specify the presence of stated features, characteristics, steps, operations, elements, and/or components, but do not themselves preclude the presence or addition of one or more other features, characteristics, steps, operations, elements, components, and/or groups thereof.

It will be understood that when an element is referred to as being "connected," "coupled," "mated," "attached," "fixed," etc. to another element, it can be directly connected to the other element, and/or intervening elements may be present. In contrast, when an element is referred to as being "directly connected," "directly coupled," "directly engaged" etc. to another element, there are no intervening elements present. Other words used to describe the relationship between elements should be interpreted in a like fashion (e.g., "between" versus "directly between," "adjacent" versus "directly adjacent," "engaged" versus "directly engaged," etc.). Similarly, a term such as "operatively", such as when used as "operatively connected" or "operatively engaged" is to be interpreted as connected or engaged, respectively, in any manner that facilitates operation, which may include being directly connected, indirectly connected, electronically connected, wirelessly connected or connected by any other manner, method or means that facilitates desired operation. Similarly, a term such as "communicatively connected" includes all variations of information exchange and routing between two electronic devices, including intermediary devices, networks, etc., connected wirelessly or not. Similarly, "connected" or other similar language particularly for electronic components is intended to mean connected by any means, either directly or indirectly, wired and/or wirelessly, such that electricity and/or information may be transmitted between the components.

It will be understood that, although the ordinal terms "first," "second," etc. may be used herein to describe various elements, these elements should not be limited to any order by these terms unless specifically stated as such. These terms are used only to distinguish one element from another; where there are "second" or higher ordinals, there merely must be a number of elements, without necessarily any difference or other relationship. For example, a first element could be termed a second element, and, similarly, a second element could be termed a first element, without departing from the scope of example embodiments or methods.

Similarly, the structures and operations discussed herein may occur out of the order described and/or noted in the figures. For example, two operations and/or figures shown in

succession may in fact be executed concurrently or may sometimes be executed in the reverse order, depending upon the functionality/acts involved. Similarly, individual operations within example methods described below may be executed repetitively, individually, or sequentially, to provide looping or other series of operations aside from single operations described below. It should be presumed that any embodiment or method having features and functionality described below, in any workable combination, falls within the scope of example embodiments.

While the arrangement shows and the description herein describes use of the catwalk system presented primarily in association with grain bins, the system is not so limited. Instead, it is contemplated that the catwalk system presented herein may be used in any setting or application where a catwalk is used or is useful.

With reference to FIG. **1**, a catwalk connection system **10** (catwalk system **10** or system **10**) is shown in use with an exemplary grain storage facility **12**. Grain storage facility **12** includes a plurality of grain bins **14**, and a leg **16**, among other components. Grain bins **14** are configured to store bulk amounts of grain. Grain bins **14** are connected together at the peak of their roofs by catwalk system **10**. Catwalk system **10** supports a grain handling device **18** (not shown in detail) such as a belt or conveyor that carries grain to each grain bin **14**. Leg **16** is configured to carry grain upward which is deposited on the grain handling device **18** supported by catwalk system **10**.

Pocket Connection:

With reference to FIGS. **2-24**, a catwalk system **10** is shown with a pocket connection. In this arrangement shown, catwalk system **10** is formed of a plurality of sections **19** that are connected together in end-to-end alignment to form an elongated catwalk. Catwalk system **10** includes side trusses **20** which are formed of a top cord **22**, a bottom cord **24**, end plates **26**, vertical posts **28**, diagonal posts **30**, a midrail tube **32**, and joints **34**. Joints **34** are formed of a bottom plate **36**, opposing side plates **38**, and wing plates **40** that form a pocket **42**. Joints **34** receive an end **44** of floorbeams **46** in pockets **42** and diagonal wind braces **48** connect diagonally positioned joints **34**. A walkway **50** extends across the floorbeams **46** and diagonal wind braces **48**, as is further described herein.

Side Trusses: Side trusses **20** are formed of any suitable size, shape and design and are configured to form the side of catwalk system **10** and provide the needed structural strength and rigidity to system **10**. In the arrangement shown, as one example, each side truss **20** is formed of a top cord **22** and a bottom cord **24**, wherein the top cord **22** and a bottom cord **24** include end plates **26** thereon at their outward ends. While two cords (top cord **22** and bottom cord **24**) are shown being used in side truss **20**, any other number of cords are hereby contemplated for use such as one, three, four, five, six, seven, eight, nine or ten or more.

In the arrangement shown, opposing top cord **22** and bottom cord **24** are connected to one another by a plurality of connecting posts, which are shown, as example, as vertical posts **28** and diagonal posts **30** that extend between top cord **22** and bottom cord **24**. While the term vertical post **30** as used herein includes the word "vertical", the term vertical post **30** is intended to be construed as any support member that extends between top cord **22** and bottom cord **24** in the vertical plane, in a perpendicular manner or at any angle. Bottom cord **24** also includes a plurality of joints **34** which are used to connect opposing side trusses **20** using a plurality of floorbeams **46** and diagonal wind braces **48**. Side trusses **20** also include a midrail tube **32**, among other components.

Top Cord & Bottom Cord: Top cord **22** and a bottom cord **24** are formed of any suitable size, shape and design and are configured to provide the needed strength and rigidity to side trusses **20**. In the arrangement shown, as one example, top cord **22** and a bottom cord **24** are positioned in approximate parallel spaced alignment to one another and extend a length between opposing ends that include end plates **26**. In the arrangement shown, top cord **22** and bottom cord **24** are formed of hollow square or rectangular tubing of approximately equal length and size, however any other shaped structural member is hereby contemplated for use as top cord **22** and bottom cord **24** such as an I-beam, a wide flange beam, a 90 degree angle bar, a Z-bar, a C-channel, an L-bar, a cylindrical pipe, a solid bar, a solid rod, or the like or any combination thereof. The ends of top cord **22** and bottom cord **24** include one or more end plates **26**.

End Plates: End plates **26** are formed of any suitable size, shape and design and are configured to provide a mechanism by which adjacent side trusses **20** are connected to one another. In the arrangement shown, as one example, end plates **26** are generally planar members that when viewed from the side, or along the length of top cord **22** and bottom cord **24**, are generally square or rectangular in shape, however any other shape is hereby contemplated for use. In the arrangement shown, end plates **26** enclose the ends of top cord **22** and bottom cord **24** and in doing so wholly or partially seal the ends of top cord **22** and bottom cord **24** thereby preventing water and debris from entering the ends of top cord **22** and bottom cord **24**, which can cause damage over time. As such, by closing or sealing the ends of top cord **22** and bottom cord **24** this may improve the longevity of top cord **22** and bottom cord **24**. In one arrangement, when viewed from the front side or back side, such as the view shown in FIG. **6**, the outward facing surfaces of end plates **26** form a flat plane that is configured to engage an end plate **26** of an adjacent side truss **20**.

In the arrangement shown, when square end plates **26** are used, they include at least one hole **52** positioned inward a distance from some or all of the corners. During the assembly process, the holes **52** in end plates **26** are configured to be aligned with the holes **52** of end plates **26** of adjacent side trusses **20**. Once aligned a conventional bolt **54** is passed through the aligned holes **52** and tightened in place thereby connecting adjacent side trusses **20** to one another while the outward facing surfaces of adjacent end plates **26** are in planar engagement with one another.

While end plates **26** are shown as being used to connect adjacent side trusses **20**, any other system, device, manner or method of connecting two components together is hereby contemplated for use in place of end plates **26**. In addition, end plates **26** may be used to connect any other member to side trusses **20**.

Vertical Posts: Vertical posts **28** are formed of any suitable size, shape and design and are configured to extend between and connect top cord **22** and bottom cord **24** and provide structural strength and rigidity to side trusses **20**. In the arrangement shown, as one example, vertical posts **28** are formed of hollow square or rectangular tubing, however any other shaped structural member is hereby contemplated for use as vertical posts **28** such as an I-beam, a wide flange beam, a 90 degree angle bar, a Z-bar, a C-channel, an L-bar, a cylindrical pipe, a solid bar, a solid rod, or the like or any combination thereof. In the arrangement shown, the hollow square or rectangular tubing used for vertical posts **28** is

slightly smaller than that used for top cord **22** and bottom cord **24**. In addition, while vertical posts **28** are shown extending perpendicularly between top cord **22** and bottom cord **24**, such as in FIG. **6**, vertical posts **28** are not so limited and are contemplated to extend at an angle between top cord **22** and bottom cord **24**.

In the arrangement shown, as one example, vertical posts **28** extend in approximate perpendicular alignment to the length of top cord **22** and bottom cord **24**, however any other angular arrangement is hereby contemplated for use. In the arrangement shown, the upper end of vertical posts **28** connect to the bottom side of top cord **22** and the lower end of vertical posts **28** connect to the upper surface **55** of bottom cord **24**. Joints **34** are connected to the lower end of vertical posts **28**.

In the arrangement shown, two vertical posts **28** are included in each side truss **20**. In this arrangement, each vertical post **28** is spaced inward a distance from the ends of top cord **22** and bottom cord **24** and the vertical posts **28** are spaced a distance from one another. The use of any other number of vertical posts **28** is hereby contemplated for each side truss **20** such as one, three, four, five, six, seven, eight, nine, ten or more, as is any other spacing of the vertical posts **28**, from being positioned at the ends of top cord **22** and bottom cord **24**, the middle of top cord **22** and bottom cord **24**, or any other position.

Diagonal Posts: Diagonal posts **30** are formed of any suitable size, shape and design and are configured to extend between and connect to top cord **22** and bottom cord **24** and provide structural strength and rigidity to side trusses **20**. In the arrangement shown, as one example, diagonal posts **30** are formed of hollow square or rectangular tubing, however any other shaped structural member is hereby contemplated for use as diagonal posts **30** such as an I-beam, a wide flange beam, a 90 degree angle bar, a Z-bar, a C-channel, an L-bar, a cylindrical pipe, a solid bar, a solid rod, or the like or any combination thereof. In the arrangement shown, the hollow square or rectangular tubing used for diagonal posts **30** is slightly smaller than that used for top cord **22** and bottom cord **24**. In the arrangement shown, as one example, the hollow square or rectangular tubing used for vertical posts **28** and diagonal posts **30** is the same size and shape, however, in other arrangements, the shape and/or size of vertical posts **28** and diagonal posts **30** are different.

In the arrangement shown, diagonal posts **30** extend in angled alignment to the length of top cord **22** and bottom cord **24**. In this arrangement, the upper end of diagonal posts **30** connect to the bottom side of top cord **22**. The lower end of diagonal posts **30** connect to the upper surface **55** of bottom cord **24**.

In the arrangement shown, as one example, a diagonal post **30** is positioned on either side of each vertical post **28**. In the arrangement shown, as one example, the opposing diagonal posts **30** angle inward toward the vertical post **28** as they extend upward. In this arrangement, the lower end of diagonal posts **30** connect to bottom cord **24** a distance away from where vertical post **28** connects to bottom cord **24**, whereas the upper end of the diagonal posts **30** connect to top cord **22** at or near where the upper end of vertical post **28** connects to top cord **22**. In the arrangement shown, as one example, the lower end of the outward most diagonal post **30** is positioned at or just inward a distance from the inward surface of the end plate **26** of the bottom cord **24**. In the arrangement shown, as one example, the lower end of the inward most diagonal posts **30** connect to bottom cord **24** at or near one another and near the center of bottom cord **24**. Any other number of diagonal posts **30** are hereby contemplated for use for each vertical post **28** such as one, three, four, five, six, seven, eight, nine, ten or more as is any other angular arrangement or placement.

As vertical posts **28** and diagonal posts **30** connect top cord **22** and bottom cord **24**, vertical posts **28** and diagonal posts **30** may be referred to collectively as connecting posts. It is also hereby contemplated that additional cross connecting posts may extend laterally or between one or more vertical posts **28**, between one or more diagonal posts **30** and/or between one or more vertical posts **28** and diagonal posts **30**, and/or between any other components of the system **10**. These cross connecting posts also fall under the broad definition of a connecting post.

In the arrangement shown, top cord **22** and bottom cord **24** are wider than vertical posts **28**, and for that matter, diagonal posts **30** as well, and in this arrangement, vertical posts **28** and diagonal posts **30** are centrally positioned within top cord **22** and bottom cord **24**. The recessed nature of the front and back surfaces of vertical posts **28**, and diagonal posts **30**, with respect to the front and back surfaces of top cord **22** and bottom cord **24** provide room for other components of the system **10**, as is further described herein.

Midrail Tube: Midrail tube **32** is formed of any suitable size, shape and design and is configured to provide additional structural support to side truss **23** and/or provide a conduit or tube through which electrical or other components (such as wires or cables) may extend there through along the length of side truss **20**. In other arrangements or in addition thereto, midrail tube **32** serves as a safety feature to help prevent falling through open areas on side truss **23**. In the arrangement shown, as one example, midrail tube **32** is a hollow square or rectangular tube connected to the interior surface of vertical posts **28** and diagonal posts **30**, however any other shaped tube is hereby contemplated for use, such as round or the like. In the arrangement shown, midrail tube **32** is positioned a distance between top cord **22** and bottom cord **24**, however it is contemplated that midrail tube **32** may be placed at any other position, such as outside of vertical posts **28** and diagonal posts **30**, or any other position. In addition, the use of any number of midrail tubes **32** is hereby contemplated for use, from none to as many as may be needed.

Joints: Joints **34** are formed of any suitable size, shape and design and are configured to facilitate connection of opposing side trusses **20** to one another in a fast and efficient manner while also being strong, durable and rigid. In the arrangement shown, as one example, joints **34** are formed of a bottom plate **36**, a pair of side plates **38** and a pair of wing plates **40** that are cut out of a sheet or plate of desired material. In the arrangement shown, bottom plate **36**, side plates **38** and wing plates **40** are welded together and are welded to bottom cord **24** and vertical post **28**. However, in an alternative arrangement, joints **34** are formed by any other manner, method or means such as machining, stamping, pressing, forging or any other manufacturing process. In addition, while the arrangement of a bottom plate **36**, a pair of side plates **38** and a pair of wing plates **40** is shown for use, any other configuration is hereby contemplated for use. In the arrangement shown, as one example, joints **34** form a pocket **42** that is sized and shaped to receive an end **44** of a floorbeam **46** therein. In one example, joints **34** are located at the inward surface **57** of bottom cord **24** and are aligned where a vertical post **28** connects to bottom cord **24**. However in an alternative variation joints **34** may be located at any other position along bottom cord **24** or any other position along side truss **20**.

Bottom Plate: Bottom plate **36** is formed of any suitable size, shape and design and is configured to connect to the inward surface **57** of bottom cord **24**, to facilitate connection to the opposing side plates **38**, and to define the bottom surface of pocket **42**. In the arrangement shown, as one example, bottom plate **36** is generally planar in shape and when viewed from above or below is generally rectangular in shape, however any other shape is hereby contemplated for use.

In one arrangement, the inward corners **56** of bottom plate **36**, adjacent the inward surface **57** of bottom cord **24**, are cut or removed or chamfered. The outward corners of bottom plate **36** include a hole **58** positioned a distance therein that is configured to receive a fastener **54** therein that facilitates connection of a diagonal wind brace **48** to bottom plate **36**.

In the arrangement shown, the inward edge of bottom plate **36** connects to the inward surface **57** of bottom cord **24** in a generally flat, flush and straight manner. In one arrangement, the inward edge of bottom plate **36** is welded to the inward surface **57** of bottom cord **24** on its upper surface **72** and/or its bottom surface **66** along its entire length or along a portion of its length.

In the arrangement shown, as one example, the inward edge of bottom plate **36** includes a relief **60**. Relief **60** is any groove, notch or section of material that is removed from bottom plate **36** adjacent its inward edge that is placed against the inward surface **57** of bottom cord **24**. In the arrangement shown, relief **60** is positioned between side plates **38** and facilitates drainage of moisture that finds its way between side plates **38** and bottom plate **36**. In this way, relief **60** extends the life of joint **34** by preventing the buildup of moisture that can over time rust the joint **34** and lead to premature failure.

In the arrangement shown, as one example, bottom plate **36** also includes a plurality of locating slots **62**. Locating slots **62** are configured to receive locating ears **64** that extend outward from the bottom edge of side plates **38**. Locating slots **62**, provide for precise alignment of side plates **38** and ensure that when side plates **38** are installed on bottom plate **36** the side plates **38** are positioned at the precise distance away from one another to receive the end **44** of floorbeams **46** within close and tight tolerances. The use of locating slots **62** in bottom plate **36** and the associated ears **64** in side plates **38** also provides increased strength and rigidity to the connection between bottom plate **36** and side plates **38**. In addition, by having the ear **64** of side plate **38** extend into the locating slot **62** of bottom plate **36** this facilities convenient welding or tack welding of the side plate **38** to bottom plate **36** to hold the two components together prior to other manufacturing steps.

As is shown in FIGS. **7**, **15** and **21**, the inward surface of bottom plate **36** is connected to the inward surface **57** of bottom cord **24** in such a manner that the bottom surface **66** of bottom plate **36** is positioned above the bottom surface **68** of bottom cord **24** a distance "D". This distance "D" is equal to or is slightly greater than the height or thickness of the head **70** of bolt **54** that is used to attach diagonal wind braces **48** to bottom plate **36**. By spacing bottom plate **36** upward a distance "D" from the bottom surface **68** of bottom cord **24** this provides clearance for the head **70** of fastener **54** and allows for catwalk system **10** to be set directly on top of a transverse support beam, or another structural element, without the need to use fill plates, spacers or other additional components to avoid resting the catwalk system **10** on the fasteners **54** connecting diagonal wind braces **48** to bottom plates **36**. In an alternative arrangement, the bottom surface **66** of bottom plate **36** is approximately flush with the bottom surface **68** of bottom cord **24**. In yet another alternative arrangement, the bottom surface **66** of bottom plate **36** is positioned any distance above the bottom surface **68** of bottom cord **24**.

Side Plates: Side plates **38** are formed of any suitable size, shape and design and are configured to connect to upper surface **55** and inward surface **57** of bottom cord **24**, the upper surface **72** of bottom plate **36** as well as a portion of the outward surface **73** of vertical post **28** to facilitate formation of pocket **42** and joint **34** and therefore to facilitate connection of opposing side trusses **20**. In the arrangement shown, as one example, side plate **38** is generally planar in shape when viewed from the front (as is shown in FIG. **7**) or from above or below. A pair of side plates **38** extend upward from the upper surface **72** of bottom plate **36** a distance in approximate parallel spaced relation to one another. When viewed from the side, the main body of side plate **38** is generally rectangular in shape and includes tabs **74** connected to the upper rearward side of side plates **38** and extend rearward.

In the arrangement shown, as one example, tabs **74** extend upward and over upper surface **55** of bottom cord **24** a distance. As such, the rearward edge of side plates **38** engages the inward surface **57** of bottom cord **24** and the lower surface of tabs **74** engages the upper surface **55** of bottom cord **24**. Opposing side plates **38** are spaced from one another a distance approximately equal to, or slightly greater than, the width of vertical posts **28** (as well as floorbeams **46**), as such, the inward facing surfaces of opposing tabs **74** are in approximate flat and flush engagement with the outward surfaces **73** of the lower most end of the vertical post **28** that the joint **34** is located on and connected to (as well as floorbeams **46** positioned between opposing side plates **38**). The engagement of the rearward edge of side plate **38** to the inward surface **57** of bottom cord **24** and the engagement of the lower surface of tabs **74** to the upper surface **55** of bottom cord **24** provides increased area of contact between the side plate **38** and bottom cord **24** which provides a strong and durable and precise connection. In one arrangement, welding is applied along all or a portion of these engaged surfaces.

In addition, by the extension of tabs **74** extending up and over a portion of bottom cord **24**, this ensures proper and precise vertical and lateral alignment of joint **34** on side truss **20** by aligning joint **34** on vertical post **28** and bottom cord **24**. That is, by placing the tabs **74** on either side of vertical post **28**, this precisely defines the lateral position of joint **34** and by engaging the bottom surface of tabs **74** with the upper surface **55** of bottom cord **24** this precisely defines the vertical position of joint **34**. This also ensures precise positioning of the bottom surface **66** of bottom plate **36** with respect to the bottom surface **68** of the bottom cord **24**. Also, welding is applied along all or a portion of the rearward edge, the upper edge and/or the inward edge of the tab **74** that engages vertical post **28** thereby increasing the strength of contact between the joint **34** and vertical post **28**.

In the arrangement shown, as one example, tab **74** of side plate **38** terminates just short of drain hole **76** positioned in the lower end of the outward surface **73** of vertical post **28**. Care is taken during assembly and welding to ensure that drain hole **76** is not plugged so as to prevent drainage of moisture that enters the hollow interior of vertical post **28**.

In the arrangement shown, as one example, the bottom surfaces of side plates **38** engage the upper surface **72** of bottom plate **36**. Side plates **38** also include a plurality of ears **64** that extend downward from the bottom surface of side plates **38**. Ears **64** are configured to be received within

locating slots **62** in bottom plate **36** within close and tight tolerances. Ears **64** provide for precise alignment of side plates **38** with bottom plate **36** and ensure that when side plates **38** are installed on bottom plate **36** the side plates **38** are at the precise distance away from one another to receive the end **44** of floorbeams **46** within close and tight tolerances. The use of locating slots **62** in bottom plate **36** and the associated ears **64** in side plates **38** also provides increased strength and rigidity to the connection between bottom plate **36** and side plates **38**. In addition, by having the ear **64** of side plate **38** extend into the locating slot **62** of bottom plate **36** this facilitates convenient welding or tack welding of the side plate **38** to bottom plate **36** to hold the two components together prior to other manufacturing steps.

In one arrangement, joint **34** is assembled by first installing side plates **38** on bottom plate **36** and welding them in place. Care is taken during this step to ensure that the side plates **38** are precisely positioned apart from one another and aligned in parallel spaced relation to one another to receive an end **44** of floorbeam **46**. In one arrangement, a spacer block is placed between side plates **38** while side plates **38** are welded to bottom plate **36** to maintain this spacing. The combined bottom plate **36** and side plates **38** arrangement is then installed on bottom cord **24** and vertical post **28**. This is accomplished by placing the tabs **74** on either side of vertical post **28** and then sliding the combined bottom plate **36** and side plates **38** downward until the bottom edge of tabs **74** engage the upper surface **55** of bottom cord **24** and the inward surface of bottom plate **36** and side plates **38** engage the inward surface **57** of bottom cord **24**. Once in this position, bottom plate **36** and side plates **38** are welded onto bottom cord **24** and vertical post **28**.

Once the combined bottom plate **36** and side plates **38** arrangement is installed on bottom cord **24** and vertical post **28**, next wing plates **40** are installed on bottom cord **24** and side plates **38**. To facilitate the connection between side plates **38** and wing plates **40**, side plates **38** also include at least one locating slot **78** that receives an ear **80** of wing plate **40**. In the arrangement shown, the at least one locating slot **78** is positioned at the rearward edge of side plate **38** at or just prior to the start of tab **74**. Ears **80** of wing plate **40** are configured to be received within locating slots **78** in side plate **38** within close and tight tolerances. Ears **80** provide for precise alignment of wing plates **40** with respect to side plates **38** and ensure that when wing plates **40** are installed on side plate **38** the wing plate **40** is positioned at the precise position to engage the inward surface **57** of bottom cord **24**. The use of locating slots **78** in side plate **38** and the associated ears **80** in wing plates **40** also provides increased strength and rigidity to the connection between side plate **38**, wing plate **40** and bottom cord **24**.

In the arrangement shown, as one example, the main body of opposing side plates include a pair of spaced holes **82** therein; however any other number of holes are hereby contemplated for use such as one, three, four, five, six, seven, eight, nine, ten or more. These holes **82** are sized and shaped to match corresponding holes **84** in the ends **44** of floorbeams **46** such that when a floorbeam **46** is placed within pocket **42** the holes **84** in floorbeam **46** align with the holes **82** in side plate **38** and fasteners **54** are passed there through thereby affixing floorbeam **46** to side plates **38**. Alternatively, one or more notches, grooves or any other feature is hereby contemplated in side plates **38** for use connecting floorbeam **46** to joint **34**.

Wing Plates: Wing plates **40** are formed of any suitable size, shape and design and are configured to connect to the exterior surface of side plate **38** and inward surface **57** of bottom cord **24** and to provide increased strength and rigidity to joint **34**. In the arrangement shown, as one example, wing plate **40** is generally planar in shape when viewed from above (as is shown in FIG. **9**) or below or from the side (as is shown in FIG. **15**). When viewed from the front (as is shown in FIG. **7**), the main body of wing plate **40** has a generally flat bottom edge **86**, a generally flat outward edge **88**, a generally flat upper edge **90** and a generally flat inward edge **92**. An angled surface **94** connects the upper end of the outward edge **88** to the outward edge of the upper edge **90**. In an alternative arrangement, wing plates **40** are formed of any other suitable size, shape and design such as being square or rectangular in shape or any other shape.

In the arrangement shown, as one example, wing plates **40** include relief **96** that provides clearance for the welding that connects side plate **38** to the inward surface **57** of bottom cord **24**. Relief **96** extends between the lower edge of inward edge **92** of wing plate **40** and the inward edge of the bottom edge **86** of wing plate **40**.

To facilitate the connection between wing plates **40** to side plates **38**, the inward edge **92** of wing plates **40** also include at least one ear **80** that is received within a corresponding locating slot **78** of side plate **38**. While only one ear **80** and locating slot **78** is shown, any number is hereby contemplated for use including two, three, four, five, six, seven, eight, nine or ten or more. In the arrangement shown, ears **80** of wing plate **40** are configured to be received within locating slots **78** in side plate **38** within close and tight tolerances. Ears **80** provide for precise alignment of wing plates **40** with respect to side plates **38** and ensure that when wing plates **40** are installed on side plate **38** the wing plate **40** is positioned at the precise position to engage the inward surface **57** of bottom cord **24**. The use of locating slots **78** in side plate **38** and the associated ears **80** in wing plates **40** also provides increased strength and rigidity to the connection between side plate **38**, wing plate **40** and bottom cord **24**.

In one arrangement, once the ear **80** of wing plate **40** is inserted within the locating slot **78** of side plate **38**, the inward edge **92** of wing plate **40** can be welded against the outward surface of side plate **38**. Once the ear **80** of wing plate **40** is inserted within the locating slot **78** of side plate **38**, the outward edge **88** of wing plate **40** can be welded against the inward surface **57** of bottom cord **24** and the rearward surface of the wing plate **40** can be welded against the corner and/or upper surface **55** of bottom cord **24**.

In this way, joint **34** is assembled and installed on bottom cord **24** and pocket **42** is formed. By assembling the bottom plate **36** and side plates **38** to one another and then installing this combined assembly to bottom cord **24** this speeds the installation process, this also facilitates accurate and repeatable attachment of the joint **34** to the side truss **20**. This is because the distance between the opposing side plates **38** precisely matches or mates with the vertical post **28** to which joint **34** is attached. In addition, the combined effects of the flat back surface of bottom plate **36** and side plates **38** (that engage the inward surface **57** of bottom cord **24**) coupled with the flat bottom surface of tabs **74** (that engage the upper surface **55** of bottom cord **24**) coupled with the precise spacing between side plates **38** (that fit over vertical post **28**) facilitates locating joint **34** along multiple planes which produces accurate and repeatable attachment of joint **34** to side truss **20**.

While in the arrangement shown and described predominantly above contemplates joint **34** being formed of separate pieces (bottom plate **36** and side plates **38**) which are welded

to side truss **20** followed by wing plates **40** which are welded in place, it is hereby contemplated that joint **34** may be attached to side truss **20** by any other manner, method or means such as by screwing, bolting or the like or by manufacturing the side truss of a single piece of material having some or all of the features of joint **34** therein.

Pocket: Pockets **42** are formed of any suitable size, shape and design and are configured to receive and hold an end **44** of floorbeam **46** within close and tight tolerances. In the arrangement shown, as one example, pockets **42** include generally square or rectangular recesses in joints **34**. In the arrangement shown, pockets **42** are defined on their bottom side by the upper surface **72** of bottom plate **36**, on their sides by the opposing inward surfaces of side plates **38**, and at its rearward surface by the inward surface **57** of bottom cord **24**.

Pockets **42** are sized and shaped such that when opposing side trusses **20** are positioned at the proper spacing from one another, the ends **44** of floorbeams **46** simply drop into pockets **42** from above pockets **42**. When the ends **44** of floorbeams **46** are positioned within pockets **42**, the holes **84** in floorbeams **46** align with the holes **82** in side plates **38**. Once aligned, fasteners **54** are passed through the holes **82** in side plates **38** and the holes **84** in floorbeam **46** thereby affixing the floorbeam **46** to the side plates **38** thereby holding floorbeam **46** within pocket **42**. In an alternative arrangement or in addition, one or more fasteners may be passed through the end **44** of floorbeam **46** and the bottom plate **36** thereby affixing the floorbeam **46** to the bottom plate **36**.

Floorbeams: Floorbeams **46** are formed of any suitable size, shape and design and are configured to provide structural support and to connect opposing side trusses **20**. In the arrangement shown, as one example, floorbeams **46** are generally square or rectangular hollow tubes that extend a length between opposing ends **44**. However any other shaped structural member is hereby contemplated for use as floorbeam **46** such as an I-beam, a wide flange beam, a 90 degree angle bar, a Z-bar, a C-channel, an L-bar, a cylindrical pipe, a solid bar, a solid rod, or the like or any combination thereof. The ends **44** of floorbeams **46** are inserted within the pockets **42** of joints **34** and affixed in place using fasteners **54**. In the arrangement shown, floorbeams **46** extend in approximate perpendicular alignment to the length of side trusses **20** or more specifically to the length of top cords **22** and bottom cords **24**.

Diagonal Wind Braces: Diagonal wind braces **48** are formed of any suitable size, shape and design and are configured to provide structural support and to connect opposing side trusses **20**. In the arrangement shown, as one example, diagonal wind braces **48** are formed of a length of angle iron or an L-shaped member. However, any other shaped structural member is hereby contemplated for use as diagonal wind brace **48** such as a square tube, a rectangular tube, an I-beam, a wide flange beam, a 90 degree angle bar, a Z-bar, a C-channel, a cylindrical pipe, a solid bar, a solid rod, or the like or any combination thereof.

Diagonal wind braces **48** extend at an angle between opposing side trusses **20** and connects kitty-corner or diagonally opposite joints **34** on opposing side trusses **20**. That is, diagonal wind braces **48** connect a joint **34** on one side truss **20** to the next joint **34** on the other side truss **20**. The ends of diagonal wind braces **48** have a hole that is aligned with the hole **58** in the corners of bottom plate **36** positioned just outside of side plates **38**. Once the hole in the end of diagonal wind brace **48** is aligned with the opening **58** in the corner of bottom plate **36** a fastener **54** is passed through the bottom plate **36** and diagonal wind brace **48** is tightened in place. To provide optimum strength and rigidity, diagonal wind braces **48** are connected in a zig-zag pattern along catwalk system **10** connecting each kitty-corner or diagonally opposite joint **34**.

Walkway: Walkway **50** is formed of any suitable size, shape and design that provides a surface for a user to comfortably walk upon. In the arrangement shown, as one example, walkway **50** is an elongated member that defines a generally flat elongated surface that is configured to be walked upon by a user and/or provide support for other objects and components.

In Operation: In operation, disassembled parts including side trusses **20**, floorbeams **46**, diagonal wind braces **48** and fasteners **54** are shipped to the jobsite. The catwalk system **10** is assembled on site by placing a first side truss **20** and a second side truss **20** in opposing spaced relation. The pockets **42** of joints **34** of first side truss **20** and second side truss **20** are aligned with one another and once aligned opposing ends **44** of floorbeams **46** are placed within the pockets **42**.

More specifically, floorbeams **46** are inserted into the pockets **42** of opposing side trusses **20** by lowering the ends **44** of floorbeams **46** into pocket **42**. As the ends **44** of floorbeams **46** are lowered into pockets **42**, the exterior sides of floorbeams **46** pass within close tolerances, and in some cases frictional engagement, between the inward surfaces of opposing side plates **38**. Floorbeams **46** are inserted into pockets **42** until the bottom surface of floorbeams **46** engage the upper surface of the bottom plate **36**. In this position, floorbeams **46** are fully inserted within pockets **42**. In this position, the floorbeams **46** are supported by bottom plates **36** and bounded on their sides by side plates **38**. In this position, the floorbeams **46** are also bounded at their ends **44** by the inward surface **57** of bottom cords **24**. As such, once placed within pockets **42**, floorbeams **46** are prevented from escaping from pockets **42** and instead are removed by lifting floorbeams **46** out of pockets **42**.

Once floorbeams **46** are inserted into the pockets **42** the holes **84** in the ends **44** of floorbeams **46** are aligned with the holes **82** in the side plates **38** and fasteners **54** are passed through the opposing side plates **38** and floorbeam **46** and the floorbeam **46** is tightened in place thereby affixing the floorbeam **46** to the pocket **42**.

As such, attaching opposing side trusses **20** to one another by installing floorbeams **46** in pockets **42** is a quick, easy and efficient process. There are no tools required to insert floorbeams **46** within pockets **42**, and only a wrench is needed to tighten fasteners **54**, as such, there is no special equipment needed. In addition, there are no sophisticated manufacturing steps or processes.

The diagonal wind braces **48** are installed by extending the diagonal wind braces **48** in a zig-zag pattern that extends from side truss **20** to side truss **20**. The ends of diagonal wind braces **48** are placed on the wind brace sections of bottom plate **36** just outside of side plate **38**. Holes in the ends of diagonal wind braces **48** are aligned with hole **58** in the bottom plate **36** of joint **34**. Once the hole in the end of diagonal wind brace **48** is aligned with the hole **58** in the bottom plate **36**, a fastener **54** is passed through the bottom plate **36** and diagonal wind brace **48** and tightened in place thereby affixing the diagonal wind brace **48** to the bottom plate **36**.

Once sections **19** of catwalk system **10** are formed, adjacent sections **19** of catwalk system **10** are connected to one another by aligning the holes **52** in end plates **26** of adjacent sections **19** with one another. Once the holes **52** in

opposing end plates **26** are aligned with one another fasteners **54** are passed through the opposing end plates **26** and tightened in place thereby affixing the opposing end plates **26** to one another thereby forming an elongated catwalk. This process is repeated until the desired length of the catwalk system **10** is achieved.

As diagonal wind braces **48** form a zig-zag pattern and extend from one side truss **20** to the other side truss **20** at an angle, two diagonal wind braces **48** connect to every other joint **34** along each side of catwalk system **10**. That is, two diagonal wind braces **48** connect to one joint **34** whereas the immediately adjacent joints **34** are not connected by diagonal wind braces **48**. This pattern of two diagonal wind braces **48** connecting every other joint **34** continues for the length of the catwalk system **10**.

Once the length of the catwalk system **10** is formed, walkway **50** is placed on top of floorbeams **46** and diagonal wind braces **48**. Once in place, walkway **50** is screwed or bolted to the floorbeams **46**.

In this way, a catwalk is quickly and easily assembled at a jobsite.

Side Connection:

With reference to FIGS. **25-46** an alternative arrangement of a joint **34** is presented that facilitates side connection of floorbeams **46** to side trusses **20**. In this arrangement, joints **34** are formed of any suitable size, shape and design and are configured to facilitate connection of opposing side trusses **20** to one another in a fast and efficient manner while also being strong, durable and rigid. In the arrangement shown, as one example, joints **34** are formed of a pair of clip angles **100** that are connected to bottom cord **24** and vertical posts **28**, and an end plate **102** and a pair of bottom plates **104** and a pair of side supports **106** that are connected to floorbeams **46**, among other components as is described herein.

Clip Angles: Clip angles **100** are formed of any suitable size, shape and design and are configured to facilitate connection of floorbeam **46** to opposing side trusses **20**, as well as to be connected to bottom cord **24** and vertical posts **28**. In the arrangement shown, as one example, clip angles **100**, when viewed from above or below are formed of a pair of planar members that connected in approximate perpendicular planar alignment to one another at a corner **108**. Clip angles **100** may be formed of a single generally flat member that is bent or pressed into an angled piece at corner **108**; clip angles **100** may be formed of a cast, molded or machined piece, clip angles **100** may be formed of a pair of planar members that are connected together at corner **108**, or clip angles **100** may be formed by any other manner, method or means. In the arrangement shown, clip angles **100** form a pair of outwardly facing planar exterior surfaces **110** that are positioned in approximate perpendicular planar alignment to one another that connect to one another at an exterior side of corner **108**. In the arrangement shown, clip angles **100** form a pair of inwardly facing planar interior surfaces **112** that are positioned in approximate perpendicular planar alignment to one another that connect to one another at an interior side of corner **108**. Clip angles **100** extend a vertical distance between opposing upper and lower ends **114** and terminate at outward ends **116**. In the arrangement shown, one side of clip angles **100** include hole **118** therein that is configured to receive a fastener **120** therein that facilitates connection of floorbeam **46** as is further described herein.

In the arrangement shown, as one example, clip angles **100** are positioned at the intersection of bottom cord **24** and vertical post **28**. In one arrangement, a clip angle **100** is positioned on both opposing sides of vertical post **28**. In this arrangement, the lower end **114** of clip angle **100** is placed in flat and flush planar engagement with the upper surface of bottom cord **24** and the exterior surface **110** of clip angle **100** is placed in flat and flush planar engagement with the side of vertical post **28**.

In the arrangement shown, as one example, because vertical post **28** is narrower than bottom cord **24**, the clip angle **100** is slid forward a distance such that the forward positioned exterior surface **110** having hole **118** therein is positioned in approximate planar alignment with the plane formed by the forward surface of bottom cord **24**. This planar alignment facilitates planar engagement of between the forward surface of bottom cord **24** and the exterior surfaces **110** of clip angles **100** with the planar exterior surface of end plate **102** connected to floorbeam **46**, as is further described herein.

Once clip angles **100** are positioned in the desired arrangement, all or a portion of the intersections between clip angles **100** and bottom cord **24** and vertical posts **28** are welded together. That is, in one arrangement, all or a portion of the intersection between the lower end **114** of clip angle **100** and upper surface of bottom cord **24** are welded together; all or a portion of the intersection between the upper end **114** of clip angle **100** and side of vertical post **28** are welded together; all or a portion of the intersection between the exterior surface **110** of clip angle **100** and forward surface of vertical post **28**, and in the arrangement wherein the length of clip angle **100** extends rearward of vertical post **28** a distance, all or a portion of the intersection between the exterior surface **110** of clip angle **100** and the rearward surface of vertical post **28**, as well as any other intersection. Connecting clip angle **100** by welding in this manner provides a strong connection that is dimensionally accurate due to the engagement and planar alignment of the components. In addition, connecting clip angle **100** in this manner is relatively quick and easy as well and welding provides a strong, durable and long lasting connection. In an alternative arrangement, clip angle **100** may be bolted to vertical post **28** by passing a fastener **120** through clip angle **100** and vertical post **28**.

When clip angles **100** are installed on side trusses **20** in one arrangement, holes **118** in clip angles **100** are positioned in vertical alignment with holes **122** in bottom cord **24**, although it is also contemplated that holes **118** and **122** are positioned in an unaligned manner. In addition, it is contemplated that any number of holes may be used in clip angles **100** and bottom cord **24** to facilitate connection of floorbeams **46**. As is also shown, in one arrangement, a hole is placed at the lower forward edge of vertical post **28** that facilitates the drainage of water that may enter the inside of vertical post **28**.

Floorbeams: In the side connection arrangement shown in FIGS. **25-46** floorbeams **46** are formed of any suitable size, shape and design and are configured to facilitate connection of opposing side trusses **20**. In the arrangement shown, as one example, floorbeams **46** include an end plate **102** that is connected to opposing ends of floorbeam **46**. In the arrangement shown, as one example, end plate **102** is generally flat and planar in shape, when viewed from the side, and generally square or rectangular in shape when viewed along the length of floorbeam **46**. In the arrangement shown, as one example, end plate **102** closes or seals the end of floorbeam **46**. In one arrangement, floorbeam **46** and end plate **102** are welded together, however it is hereby contemplated that floorbeam **46** and end plate **102** are connected by any other manner, method or means.

In one arrangement, as is shown, end plate **102** is generally square or rectangular in shape, when viewed along the

length of floorbeam **46**. When connected to floorbeam **46**, the plane formed by end plate **102** is positioned in approximate perpendicular alignment to the length of floorbeam **46**. When end plate **102** is connected to floorbeam **46**, end plate **102** extends well beyond the exterior periphery of floorbeam **46**.

In one arrangement, end plate **102** includes a plurality of holes **124** that are configured to align with the holes **118** in clip angles **100** and the holes **122** in bottom cord **24**. Once aligned, fasteners **120** connect floorbeams **46** to side trusses **20** by passing fasteners **120** through end plate **102** and clip angles **100** as well as by passing fasteners **120** through end plate **102** and bottom cord **24**. In one arrangement, additional holes **124** may be placed in end plate **102** to facilitate drainage of water from floorbeam **46** or from other portions of the joint **34**.

In one arrangement, end plate **102** includes a recess **126**. In the arrangement shown, as one example, recess **126** extends downward from the upper edge of end plate **102** and is roughly the width of vertical post **28**. In the arrangement shown, as one example, the lower end of recess **126** terminates just above the upper surface of floorbeam **46** and includes a notch **128** therein that extends downward and terminates in approximate alignment with the upper surface of floorbeam **46**. The combination of recess **126** and notch **128** facilitates the drainage of water and debris that may be captured between the outward facing surface of end plate **102** and the inward facing surfaces of vertical post **28**, which is caused, in-part, by vertical post **28** being smaller than bottom cord **24**. The addition of recess **126** and notch **128** to end plate **102** and joint **34** help to prevent water and debris build up that can cause rusting and deterioration of the components of joint **34** thereby and in this way the addition of recess **126** and notch **128** extends the life of joint **34**.

In one arrangement, as is shown, a bottom plate **104** is positioned on opposing sides of floorbeam **46** and extends between the inward facing surface of end plate **102** and the exterior surface of floorbeam **46**. In the arrangement shown, as one example, bottom plate **104** is formed of a generally flat and planar member, that when viewed from above or below is generally rectangular in shape. In the arrangement shown, as one example, one edge of bottom plate **104** is positioned in flat and planar engagement with the exterior surface of floorbeam **46**, near the lower side of floorbeam **46**, and another edge of bottom plate **104** is positioned in flat and planar engagement with the interior surface of end plate **102**. In one arrangement, all or a portion of the engaging surfaces between end plate **102** and bottom plate **104**, as well as all or a portion of the engaging surfaces between bottom plate **104** and the exterior surface of floorbeam **46** are welded together, thereby forming a strong and durable connection. The connection of bottom plate **104** to end plate **102** and floorbeam **46** strengthens the connection between these components.

In the arrangement shown, as one example, the outward corners of bottom plate **104** are rounded, so as to reduce the potential to catch on other components or cause injury. The upper surface of bottom plate **104** forms a generally flat and planar surface that is configured to receive and support an end of a diagonal wind brace **48** thereon. Bottom plate **104** includes a hole **130** therein that facilitates fastening of diagonal wind brace **48** to bottom plate **104** by receiving a fastener **54**.

In the arrangement shown, as one example, while bottom plate **104** is positioned at the lower end of floorbeam **46**, the lower surface of bottom plate **104** is positioned a distance "D" above the bottom surface of floorbeam **46**. This distance "D" is equal to or is slightly greater than the height or thickness of the head **70** or length of the shaft of fastener **54** that is used to attach diagonal wind braces **48** to bottom plate **104**. By spacing bottom plate **104** upward a distance "D" from the lower surface of floorbeam **46** this provides clearance for the head **70** of fastener **54** and allows for catwalk system **10** to be set directly on top of a transverse support beam, or another structural element, without the need to use fill plates, spacers or other additional components to avoid resting the catwalk system **10** on the fasteners **54** connecting diagonal wind braces **48** to bottom plates **104**.

In one arrangement, as is shown, a side support **106** is positioned on opposing sides of floorbeam **46** and extends between the inward facing surface of end plate **102** and the exterior surface of floorbeam **46**. In the arrangement shown, as one example, side supports **106** are positioned a distance above bottom plate **104**. To facilitate access to bottom plate **104** by diagonal wind brace **48**, side support **106** is smaller than bottom plate **104**. In one arrangement, side support **106** is formed of a generally flat and planar member, that when viewed from above or below is generally triangular in shape. In the arrangement shown, as one example, one edge of side support **106** is positioned in flat and planar engagement with the exterior surface of floorbeam **46**, near the upper side of floorbeam **46**, and another edge of side support **106** is positioned in flat and planar engagement with the interior surface of end plate **102**. In one arrangement, all or a portion of the engaging surfaces between end plate **102** and side support **106**, as well as all or a portion of the engaging surfaces between side support **106** and the exterior surface of floorbeam **46** are welded together, thereby forming a strong and durable connection. The connection of side support **106** to end plate **102** and floorbeam **46** strengthens the connection between these components.

In one arrangement, as one example, end plate **102** also includes a plurality of locating slots **132**. Locating slots **132** are configured to receive locating ears **134** that extend outward from the outward facing edge of side supports **106** that engage end plate **102**. Locating slots **132** provide for precise alignment of side supports **106** and ensure that when side supports **106** are installed in the precise desired position on end plate **102**. The use of locating slots **132** in end plate **102** and the associated ears **134** in side supports **106** also provides increased strength and rigidity to the connection between end plate **102** and side supports **106**. In addition, by having the locating ear **134** of side support **106** extend into the locating slot **132** of end plate **102** this facilities convenient welding or tack welding of the side support **106** to end plate **102** and helps to hold the two components together prior to other manufacturing steps.

In Operation: In operation, disassembled parts including side trusses **20**, floorbeams **46**, diagonal wind braces **48**, fasteners **54** and fasteners **120** (and the appropriate nuts) are shipped to the jobsite. The catwalk system **10** is assembled on site by placing a first side truss **20** and a second side truss **20** in opposing spaced relation. The holes **118** in clip angles **100** and the holes **122** in bottom cord **24** of first side truss **20** and second side truss **20** are aligned with one another and once aligned opposing end plates **102** of floorbeams **46** are placed in engagement with the inward facing surfaces of bottom cord **24** and clip angles **100**.

More specifically, the exterior facing surface of end plates **102** are placed in planar engagement with the inward facing surfaces of bottom cord **24** and clip angles **100**. Once in this planar engagement, the upper positioned holes **124** in end plates **102** are aligned with the holes **118** in clip angles **100**. Similarly, once in this planar engagement, the lower posi-

tioned holes **124** in end plates **102** are aligned with the holes **122** in bottom cord **24**. Once end plate **102** is aligned in this manner, fasteners **120** are passed through clip angles **100** and end plate **102**, as well as through bottom cord **24** and end plate **102**, and tightened in place. In this way, floorbeams **46** are quickly, easily, securely and precisely attached to side trusses **20**. There are no tools required to attach floorbeams **46** to side trusses **20** other than a wrench that is needed to tighten fasteners **120**, as such, there is no special equipment needed. In addition, there are no sophisticated manufacturing steps or processes.

The diagonal wind braces **48** are then installed by extending the diagonal wind braces **48** in a zig-zag pattern that extends from side truss **20** to side truss **20**. The ends of diagonal wind braces **48** are placed on the wind brace sections of bottom plate **104**. Holes in the ends of diagonal wind braces **48** are aligned with hole **130** in the bottom plate **104** of joint **34**. Once the hole in the end of diagonal wind brace **48** is aligned with the hole **130** in the bottom plate **104**, a fastener **54** is passed through the bottom plate **104** and diagonal wind brace **48** and tightened in place thereby affixing the diagonal wind brace **48** to the bottom plate **104**.

Once sections **19** of catwalk system **10** are formed, adjacent sections **19** of catwalk system **10** are connected to one another by aligning the holes **52** in end plates **26** of adjacent sections **19** with one another. Once the holes **52** in opposing end plates **26** are aligned with one another fasteners **54** are passed through the opposing end plates **26** and tightened in place thereby affixing the opposing end plates **26** to one another thereby forming an elongated catwalk. This process is repeated until the desired length of the catwalk system **10** is achieved.

As diagonal wind braces **48** form a zig-zag pattern and extend from one side truss **20** to the other side truss **20** at an angle, two diagonal wind braces **48** connect to every other joint **34** along each side of catwalk system **10**. That is, two diagonal wind braces **48** connect to one joint **34** whereas the immediately adjacent joints **34** are not connected by diagonal wind braces **48**. This pattern of two diagonal wind braces **48** connecting every other joint **34** continues for the length of the catwalk system **10**.

Once the length of the catwalk system **10** is formed, walkway **50** is placed on top of floorbeams **46** and diagonal wind braces **48**. Once in place, walkway **50** is screwed or bolted to the floorbeams **46**.

In this way, a catwalk is quickly and easily assembled at a jobsite. This system provides an arrangement where there are no lose plates or pieces or intricate parts that must be assembled at the job site. In addition, the use of clip angles **100** eliminates the need to weld a plate to the side of the bottom cord **24** thereby eliminating the potential for pack rust between the bottom cord **24** and the welded plate. In addition, the use of clip angles **100** with a hole **118** in the clip angle **100** allows for floorbeams **46** of varying size to be used by simply moving the position of holes **118** in clip angle **100** and holes **122** in bottom cord **24** and holes **124** in end plate **102**. In addition, by positioning the bottom plate **104** a distance above the lower surface of floorbeam **46** this provides room or relief for fasteners **54** which allows the catwalk to be placed directly on top of a transverse support beam without the need to use fill plates to avoid resting on the fasteners connecting the diagonal wind braces **48** the joints **34**.

Rocker Bearing System:

Due to the immense size of many grain bin storage facilities **12**, coupled with the extreme size and height of modern commercial grain bins **14** relative movement of catwalk system **10** with respect to other components often occurs and should be accounted for. The source of relative movement of catwalk system **10** may be due to high winds, sagging over time, thermal expansion or thermal contraction due to temperature fluctuations, seismic events, shifting or settling of components, compression due to filling or loading or by any number of other events. If this relative movement is constrained, additional stresses may be placed upon catwalk system **10** that could lead to premature failure of the catwalk system. In these applications, care must be taken to facilitate and account for the relative movement of catwalk system **10**.

In addition, in many applications the catwalk system **10** does not extend in a horizontal plane and instead the catwalk system **10** extends at an angle to the horizontal plane. In these applications, care must be taken to facilitate and account for the angular extension of catwalk system **10**.

In one arrangement, with reference to FIGS. **47-62**, a rocker bearing system **200** is presented that facilitates the angular extension of catwalk system **10**, as well as facilitates the relative movement of catwalk system **10**, while facilitating support to be provided to catwalk system **10**. Rocker bearing system **200** may be formed of any suitable size, shape and design. The use of a rocker bearing system **200** allows for support to be provided to catwalk system **10**, such as at any portion of the catwalk system **10**, such as at mid-span, while also allowing catwalk system **10** to extend at an angle. The use of a rocker bearing system **200** allows for support to be provided to an angularly extending catwalk system **10** using a horizontally positioned support member **202** without further accommodation. The use of a rocker bearing system **200** eliminates the need to position support members **202** at the precise angle at which the catwalk system **10** extends. The use of a rocker bearing system **200** allows for support to be provided to catwalk system **10** despite variations in the angle of extension of catwalk system **10** due to temperature fluctuations, high winds, seismic events, loading or unloading stresses, or the like. The use of a rocker bearing system **200** allows for support to be provided to catwalk system **10** despite movement of catwalk system **10** relative to a support member **202** or other components of the system **10** due to temperature fluctuations, high winds, seismic events or the like. The use of a rocker bearing system **200** is also self-adjusting, that is, as the angle of catwalk system **10** changes the rocker bearing system **200** self-adjusts.

In the arrangement shown, as one example, a rocker bearing system **200** is positioned between the upper surface of a support member **202** and the lower surface of catwalk system **10**. More specifically, in the arrangement shown, as one example, a rocker bearing system **200** is positioned between the upper surface of a support member **202** and below the lower surface of both opposing bottom cords **24** of a section **19** of catwalk system **10**. In this position, rocker bearing system **200** allows support to be provided by support member **202** to catwalk system **10** while also allowing for varying angles of catwalk system **10**, outside of horizontal as well as allowing for some relative movement of catwalk system **10** relative to support member **202**.

Support member **202** may be formed of any suitable size, shape and design and is configured to provide support to catwalk system **10**. In one arrangement, as is shown, support member **202** is formed of a length of an I-beam that extends in a generally horizontal manner between, and past, opposing bottom cords **24** of catwalk system **10**, however any other shaped structural member, or members, is hereby contemplated for use as support member **202** such as a

square tube, a rectangular tube, a wide flange beam, a 90 degree angle bar, a Z-bar, a C-channel, an L-bar, a cylindrical pipe, a solid bar, a solid rod, a plurality of frame members, or the like or any combination thereof.

Rocker bearing system **200** is formed of any suitable size, shape and design. In the arrangement presented, as one example, rocker bearing system **200** includes a bottom section **204** and a top section **206**, the bottom section **204** having a bottom plate **208**, a pair of end plates **210**, and a stiffener **212** that extends between the end plates **210**, the top section **206** having a top plate **214**, a forward plate **216**, a rearward plate **218** and a rocker pin **220**, among other components and features as is described herein.

Bottom plate **208** is formed of any suitable size, shape and design and is configured to facilitate connection of rocker bearing system **200** to the upper surface of a horizontally extending support member **202**. In one arrangement, as is shown, bottom plate **208** is formed of a generally flat and planar member that when viewed from above or below is formed in a generally square or rectangular shape, however any other shape is hereby contemplated for use. In one arrangement, as is shown, the generally flat and planar shape of bottom plate **208** facilitates flat and flush planar engagement with the upper surface of support member **202**. In this way, the generally planar bottom surface of bottom plate **208** provides a stable and broad support area for rocker bearing system **200** to rest upon support member **202**. In one arrangement, a hole **222** is positioned adjacent each corner of bottom plate **208**. These holes **222** are configured to receive fasteners **224** therein that facilitate a strong and rigid connection to support member **202**.

In the arrangement shown, as one example, a pair of end plates **210** connect to, and extend upward from, the upper surface of bottom plate **208** in approximate parallel spaced relation to one another. End plates **210** are formed of any suitable size, shape and design and are configured to facilitate connection to bottom plate **208** as well as receive and provide support for rocker pin **220**. In one arrangement, as is shown, end plates **210** are formed of a generally flat and planar member that when viewed from the front or back (which is perpendicular to the length of catwalk system **10**), have a generally flat bottom surface that connects at its outward edges to generally vertically extending side surfaces. These side surfaces of end plates **210** begin to taper toward one another at corners as they extend upward, however any other shape is hereby contemplated for use. A recess **226** is generally centrally positioned in the upper end of end plates **210**. When viewed from the front or back (which is perpendicular to the length of catwalk system **10**) recess **226** is generally semi-circular in shape, or curved, and is configured to receive rocker pin **220** therein. Recess **226** is configured to receive and hold rocker pin **220** while allowing rocker pin **220** to rotate. In this way, the rotation of rocker pin **220** within recess **226** facilitates infinite angular adjustment and accommodation.

In the arrangement shown, as one example, a stiffener **212** connects to the upper surface of bottom plate **208** as well as connects to the opposing inward facing surfaces of end plates **210**. Stiffener **212** is formed of any suitable size, shape and design and is configured to connect opposing end plates **210** as well as connect to bottom plate **208**. In one arrangement, as is shown, stiffener **212** is formed of a generally flat and planar member that when viewed from the side (which is along the length of catwalk system **10**) is generally square or rectangular in shape. In this arrangement, the lower edge of stiffener **212** engages the upper surface of bottom plate **208** and its outward edges engages the inward facing surfaces of end plates **210** in generally flat and flush planar alignment and engagement.

In one arrangement, the bottom edge of stiffener **212** includes an ear **228** that is received within a locating slot **230** in bottom plate **208**. Also, in one arrangement, the outward edges of stiffener **212** include an ear **232** that is received within a locating slot **234** in end plates **210**. The use of locating slots **230** and **234**, provide for precise alignment of stiffener **212**, end plates **210** and bottom plate **208** with respect to one another within close and tight tolerances. The use of locating slots **230** and **234** in bottom plate **208** and end plates **210** and the associated ears **228** and **232** in stiffener **212** provides increased strength and rigidity to the connection between bottom plate **208**, stiffener **212** and end plates **210**. In addition, by having the ear **228** and **232** extend into locating slots **230** and **234** this facilitates convenient welding or tack welding of the stiffener **212** to bottom plate **208** and to end plates **210** to hold the components together prior to other manufacturing steps.

In the arrangement shown, as one example, the upper end of stiffener **212** terminates just below the lower edge of recess **226** in end plates **210** so as not to interfere with the rotatable engagement between recess **226** of end plates **210** and rocker pin **220**. In another arrangement shown, the upper end of stiffener **212** terminates in a continuous manner with the lower edge of recess **226** in end plates **210** and in this arrangement, the upper surface of stiffener **212** serves as part of the bearing surface that facilitates rotatable engagement between recess **226** of end plates **210** and rocker pin **220**.

Top plate **214** is formed of any suitable size, shape and design and is configured to facilitate connection of rocker bearing system **200** to the lower surface of a catwalk system **10**, or more specifically the lower surface of a bottom cord **24**. In one arrangement, as is shown, top plate **214** is formed of a generally flat and planar member that when viewed from above or below is formed in a generally square or rectangular shape, however any other shape is hereby contemplated for use. In one arrangement, as is shown, the generally flat and planar shape of top plate **214** facilitates flat and flush planar engagement with the lower surface of bottom cord **24** of catwalk system **10**. In this way, the generally planar upper surface of top plate **214** provides a stable support area for engaging bottom cord **24** of catwalk system **10**.

In the arrangement shown, as one example, forward plate **216** connects to the forward end of top plate **214**. Forward plate **216** is formed of any suitable size, shape and design and is configured to facilitate connection to top plate **214** as well as receive and provide support for rocker pin **220**.

In one arrangement, as is shown, forward plate **216** is formed of a generally flat and planar member that when viewed from the front or back (which is perpendicular to the length of catwalk system **10**), has a generally flat upper surface that is positioned a distance above the plane formed by the upper surface of top plate **214**. This upper surface of forward plate **216** connects at its outward edges to generally vertically extending side surfaces, that extend downward a distance before they begin to taper toward one another at corners before connecting to one another at a rounded lower end. However any other shape is hereby contemplated for use.

In one arrangement, top plate **214** includes a pair of ears **236** that are each received within a locating slot **238** in forward plate **216** on opposing sides of rocker pin **220**. The use of locating slots **238** in forward plate **216** and the associated ears **236** in top plate **214** provides increased

strength and rigidity to the connection between top plate **214** and forward plate **216**. In addition, by having the ears **236** extend into locating slots **238** this facilitates convenient welding or tack welding of the forward plate **216** and top plate **214** to hold these components together prior to other manufacturing steps.

In the arrangement shown, as one example, rearward plate **218** connects to the rearward portion of top plate **214**. Rearward plate **218** is formed of any suitable size, shape and design and is configured to facilitate connection to top plate **214** as well as receive and provide support for rocker pin **220**.

In one arrangement, as is shown, rearward plate **218** is formed of a generally flat and planar member that when viewed from the front or back (which is perpendicular to the length of catwalk system **10**), has a generally flat upper surface that is in flat and flush planar engagement with the lower surface of top plate **214**. This upper surface of rearward plate **218** connects at its outward edges to side surfaces that extend downward as they extend inward toward one another before connecting to one another at a rounded lower end. However any other shape is hereby contemplated for use.

In one arrangement, rearward plate **218** includes at least one ear **240** that is received within a locating slot **242** in top plate **214**. The use of locating slot **242** in top plate **214** and the associated ear **240** in rearward plate **218** provides increased strength and rigidity to the connection between top plate **214** and rearward plate **218**. In addition, by having the ear **240** extend into locating slots **242** this facilitates convenient welding or tack welding of the rearward plate **218** and top plate **214** to hold these components together prior to other manufacturing steps.

In the arrangement shown, as one example, when forward plate **216** and rearward plate **218** are connected to top plate **214**, forward plate **216** and rearward plate **218** extend in approximate parallel spaced relation to one another. In this arrangement, rocker pin **220** is received in and extends through forward plate **216** and rearward plate **218** at or a distance below the lower surface of top plate **214**. In the arrangement shown, rocker pin **220** extends through forward plate **216** and rearward plate **218** in a generally perpendicular alignment to the planes established by forward plate **216** and rearward plate **218**. In the arrangement shown, rocker pin **220** extends in a generally parallel manner to the plane established by top plate.

The upper surface of forward plate **216** extends upward a distance above the upper surface of top plate **214**. This upward extension forms a lip such that when two rocker bearings **200** are placed on a support member **202**, the forward plates **216** are positioned on the outward sides of bottom cords **24**. In this way, the extension of forward plate **216** above top plate **214** forms a lip or channel that helps to retain catwalk system **10** therein. Other than the lip formed by top plate **214**, the upper surface of top plate **214** is generally flat and allows for catwalk system **10** to slide on or over the upper surface of top plate **214**.

Rocker pin **220** is formed of any suitable size, shape and design and is configured to facilitate angular rotation of rocker bearing system **200**. In one arrangement, rocker pin **220** is a generally cylindrically shaped member that extends through forward plate **216** and rearward plate **218** in a generally perpendicular manner at or a distance just below the lower surface of top plate **214**.

In Operation: Rocker bearing system **200** is used in association with catwalk system **10** to accommodate angular and relative movement of catwalk system **10**. In one arrangement, bottom section **204** is attached to the upper surface of support member **202** in the desired position by passing fasteners **224** through holes **222** in bottom plate **208** and tightening the two components together. In this way, rocker bearing system **200** is rigidly attached to support member **202**. Top section **206** of rocker bearing system **200** is placed on bottom section **204** such that the rocker pin **220** is received within the recess **226** in the upper ends of end plates **210**. In this positon, the forward plate **216** of top section **206** is positioned just outside of the forward positioned end plate **210** of bottom section **204**, and the reward plate **218** is positioned just outside of the rearward positioned end plate **210**, which maintains the proper positioning and alignment of top section **206** with respect to bottom section **204**. Once top section **206** is engaged with bottom section **204**, top section **206** may rotate upon the engagement between the bearing surface of bottom section **204**, namely recess **226**, and the curved exterior surface of rocker pin **220**.

Care is taken to install a pair of rocker bearings **200** on the upper surface of support member **202** a distance away from one another such that opposing bottom cords **24** are received upon the upper surface of top plate **214** and between opposing upwardly extending portions of forward plate **216**. That is, care is taken to ensure that the upwardly extending flange formed by the upper end of forward plate **216** that extends above top plate **214** of opposing rocker bearings **200** are positioned facing away from one another such that the catwalk system **10** is received between the opposing flanges of forward plates **216**. In this way, catwalk system **10** is captured between forward plates **216**, while allowing relative movement of catwalk system **10**. Said another way, when assembled in this manner, bottom cords **24** of section **19** of catwalk system **10** rest upon the upper surface of top plates **214** between forward plates **216**, thereby holding the catwalk system **10** between and upon opposed rocker bearings **200**.

During use, as the wind blows, as the grain bins **14** are loaded and unloaded, as temperatures change, as stresses change, catwalk system **10** bends and flexes, contracts and expands. As the length of catwalk system **10** extends or contracts, the lower surface of bottom cords **24** slide over the upper surface of top plate **214**. In this way, support is provided to catwalk system **10** by rocker bearing system **200** while allowing for expansion and contraction of catwalk system **10**. As the angle of catwalk system **10** varies, the top section **206** rotates relative to the bottom section **204** as the bearing surface of rocker pin **220** rotates within the bearing surface of the cradle formed by recess **226**. In this way, support is provided to catwalk system **10** by rocker bearing system **200** while allowing for angular variation of catwalk system **10**.

Spreader Beam Kit:

Due to the immense size of many grain bin storage facilities **12**, some catwalk systems **10** extend great lengths. In these applications it may be necessary to spread the support provided to catwalk system **10** over more than just a single point of contact. Instead, in these cases, the support must be spread across a greater area than just a single point of contact.

With reference to FIGS. **63-78** a spreader beam kit **300** is presented. Spreader beam kit **300** is formed of any suitable size, shape and design and is configured to provide support to catwalk system **10** while spreading the support across a greater area and/or across multiple points of contact. This is as opposed to providing all the support to single focused area of catwalk system **10**. As such, the use of spreader beam kit

300 facilitates providing a greater amount of support to catwalk system 10, which may be useful and/or needed in longer spans and heavier applications.

In the arrangement shown, as one example, spreader beam kit 300 includes a pair of spreader beams 302 and a pair of cross braces 304. In the arrangement shown, as one example, spreader beams 302 are formed of a length of an I-beam, however any other shaped structural member is hereby contemplated for use as spreader beam 302 such as a square tube, a wide flange beam, a 90 degree angle bar, a Z-bar, a C-channel, an L-bar, a cylindrical pipe, a solid bar, a solid rod, a plurality of frame members, or the like or any combination thereof. Similarly, in the arrangement shown, as one example, cross braces 304 are formed of a length of a C-channel beam, however any other shaped structural member is hereby contemplated for use as cross brace 304 such as an I-beam, a square tube, a wide flange beam, a 90 degree angle bar, a Z-bar, an L-bar, a cylindrical pipe, a solid bar, a solid rod, a plurality of frame members, or the like or any combination thereof.

In the arrangement shown, as one example, spreader beams 302 are positioned in approximate parallel spaced relation to one another. Cross braces 304 are connected to the inward facing surfaces of opposing spreader beams 302 adjacent their outward ends. Cross braces 304 extend in approximate parallel spaced relation to one another, and cross braces 304 extend in approximate perpendicular relation to spreader beams 302. In this way, the connection of opposed spreader beams 302 by opposing cross braces 304 forms a generally square or rectangular member, when viewed from above or below.

In the arrangement shown, spreader beams 302 are formed of a length of an I-beam, however any other configuration of a beam or support member is hereby contemplated for use. In the arrangement where spreader beam 302 is formed of an I-beam, spreader beam 302 forms a pair of channels along the sides of the spreader beam 302. These opposing channels are defined by the inward facing surfaces of the upper and lower flanges of the spreader beam 302 and the center wall of the spreader beam 302. In this arrangement, wherein spreader beam 302 is an I-beam, cross braces 304 are formed of a length of a C-channel which is sized and shaped to fit within the channel formed in the side of spreader beam 302. When the ends of a cross brace 304 are positioned within the channel of a spreader beam 302 the exterior surface of the upper and lower flanges of the cross brace 304 are positioned in approximate planar alignment and/or engagement with the interior surfaces of the upper and lower flanges of spreader beam 302. In this positon, the end of the cross brace 304 is positioned in alignment and/or engagement with the center wall of spreader beam 302.

In one arrangement, flanges 306 are positioned within the channels of spreader beam 302 and facilitate connection of cross braces 304 to spreader beams 302. In the arrangement shown, as one example, flanges 306 are formed of a generally flat and planar member that connects at its upper and lower edges to the interior surface of the upper and lower flanges of spreader beam 302, and connect at its inward edge to the center wall of spreader beam 302. In one arrangement, flanges 306 are welded into spreader beams 302, however any other manner, method or means of connecting flanges 306 to spreader beam 302 is hereby contemplated for use. Once attached, flanges 306 enclose the channels of spreader beam 302.

In the arrangement shown, flanges 306 include one or more holes 308 therein that are configured to receive fasteners 310 that extend through and connect cross braces 304 to spreader beams 302. In this way, cross braces 304 connect to spreader beams 302 in a precise, strong and durable manner with close and tight tolerances. When spreader beams 302 and cross braces 304 are connected together a strong, rigid and durable square or rectangular member is formed.

In the arrangement shown, the upper surface and lower surface of spreader beams 302 are generally flat and flush and extend in approximate parallel planar alignment to one another. Once assembled, the generally flat and planar lower surface of opposing spreader beams 302 are placed in generally flat and flush engagement with the generally flat and planar upper surface of support member 202, which, as is shown in FIG. 63, is itself an I-beam, however any other size, shape or design is hereby contemplated for support member 202. In the arrangement shown, support member 202 is supported by legs 312 or another support member. As such, when spreader beams 302 are placed on support member 202, support member 202 provides support to spreader beams 302. Support member 202 may be placed at any position under spreader beams 302 and spreader beams 302 transfer and spread that support to catwalk system 10.

In the arrangement shown, catwalk system 10 is connected to and supported by spreader beams 302. More specifically, in the arrangement shown, as one example, mounting brackets 314 are connected to the upper surface of spreader beams 302 that are configured to receive and engage and mount to side trusses 20 of catwalk system 10.

Mounting brackets 314 are formed of any suitable size, shape and design and are configured to receive and engage and mount to bottom cords 24 of side trusses 20 of catwalk system 10. In some arrangements, it is desirable to connect to and support side trusses 20 at joint 34 at and/or under a vertical post 28, due to the rigidity of the side truss 20 at this point as well as due to the ability of vertical post 28 to transfer support to top cord 22. In one arrangement, as one example, mounting brackets 314 include a bottom plate 316, a side plate 318 and a pair of center plates 320, however any other configuration is hereby contemplated for use.

Bottom plate 316 is formed of any suitable size, shape and design and is configured to facilitate connection of mounting bracket 314 to the upper surface of spreader beam 302. In one arrangement, as is shown, bottom plate 316 is formed of a generally flat and planar member that when viewed from above or below is formed in a generally square or rectangular shape, however any other shape is hereby contemplated for use. In one arrangement, as is shown, the generally flat and planar shape of bottom plate 316 facilitates flat and flush planar engagement with the upper surface of spreader beam 302. In this way, the generally planar lower surface of bottom plate 316 provides a stable support area for mounting bracket 314. Bottom plate 316 includes a plurality of holes 322 therein that are configured to align with and connect to holes 324 in the upper surface of spreader beam 302 through fasteners 326. Side plate 318 and center plates 320 connect to bottom plate 316.

Side plate 318 is formed of any suitable size, shape and design and is configured to facilitate connection of mounting bracket 314 to the exterior surface of bottom cord 24 of a side truss 20 just below a vertical post 28 at joint 34. In one arrangement, as is shown, side plate 318 is formed of a generally flat and planar member that when viewed from the side is formed in a generally square or rectangular shape, however any other shape is hereby contemplated for use. In one arrangement, as is shown, the generally flat and planar shape of side plate 318 facilitates flat and flush planar engagement with the exterior surface of bottom cord 24 of

a side truss **20** just below a vertical post **28** at joint **34**. In this way, the generally planar interior surface of side plate **318** provides a stable support area engaging bottom cord **24** of a side truss **20**. Side plate **318** includes a plurality of holes **328** therein that are configured to align with and connect to holes **122** in bottom cord **24** of a side truss **20** just below a vertical post **28** at joint **34**. Side plate **318** and center plates **320** connect to bottom plate **316**.

In the arrangement shown, the plane formed by side plate **318** extends in approximate perpendicular planar alignment to the plane formed by bottom plate **316**. The lower end of side plate **318** connects to the upper surface of bottom plate **316**. In one arrangement, one or more reliefs **330** are positioned in the lower edge of side plate **318** at the intersection of bottom plate **316** and side plate **318** that allow moisture and debris to pass there through preventing buildup of moisture and debris that can cause rust and deterioration. Center plates **320** are connected to and extend between bottom plate **316** and side plate **318**.

Center plates **320** are formed of any suitable size, shape and design and are configured to engage and support the bottom surface of bottom cord **24** of a side truss **20** when side plate **318** is connected to bottom cord **24**. Center plates **320** elevate the bottom cord **24** so as to make room for the downward extension of end plates **26** at the intersection of adjacent side trusses **20**. That is, in the arrangement shown, as one example, center plates **320** raise above bottom plate **316** a distance such that when mounting brackets **314** are connected to side trusses **20** the lower edge of end plates **26** of adjacent side trusses **20** is positioned in engagement with or just above the upper surface of spreader beam **302**.

In one arrangement, as is shown, center plates **320** are formed of a generally flat and planar member that when viewed from the side is formed in a generally square or rectangular shape, however any other shape is hereby contemplated for use. In one arrangement, as is shown, the generally flat and planar shape of center plates **320** facilitate engagement of the bottom surface of bottom cord **24** of a side truss **20** when end plates **26** is positioned between a pair of mounting brackets **314**.

In the arrangement shown, the plane formed by center plates **320** extends in approximate perpendicular planar alignment to the plane formed by bottom plate **316**. In the arrangement shown, the plane formed by center plates **320** also extends in approximate perpendicular planar alignment to the plane formed by side plate **318**. The lower end of center plates **320** connects to the upper surface of bottom plate **316**, and the outward facing end of center plates **320** connects to the interior surface of side plate **318**. In one arrangement, the outward facing end of center plates **320** includes an ear that is received within a locating slot in side plate **318** which facilitates precise alignment of center plate **320** with respect to side plate **318**. In one arrangement, the lower facing end of center plates **320** includes an ear that is received within a locating slot in bottom plate **316** which facilitates precise alignment of center plate **320** with respect to bottom plate **316**. The extension of center plates **320** between bottom plate **316** and side plate **318** provides strength and rigidity to mounting bracket **314**. In one arrangement, some or all of the engaging surfaces of bottom plate **316**, side plate **318** and center plate **320** are connected to one another by welding, however any other manner of connecting bottom plate **316**, side plate **318** and center plate **320** is hereby contemplated for use such as bolting, screwing or the like, as is forming these components out of a single piece of material such as by machining, molding, casting or the like.

Mounting brackets **314** are installed on the upper surface of spreader beams **302** by passing fasteners **326** thorough the holes **322** in bottom plate **316** as well as through holes **324** in the upper surface of spreader beam **302**. In the arrangement shown, as one example, a plurality of sets of holes **324** are positioned along the upper surface of spreader beam **302** so as to facilitate installation of mounting brackets **314** along the length of spreader beams **302**. The ability to install mounting brackets **314** along the length of spreader beam **302** accommodates variability between the location of the support member **202** and the joints **34** of the catwalk system **10**.

In Operation: Spreader beams **302** are positioned in approximate parallel spaced alignment to one another and the ends of cross braces **304** are inserted in the channels adjacent the end of spreader beams **302**. The ends of cross braces **304** are inserted into the channels of spreader beams **302** and the center wall of the cross braces **304** is positioned in alignment and/or engagement with the flanges **306** positioned within the channel of the spreader beams **302**. When the center wall of cross braces **304** are aligned with the flanges **306** in the channel of spreader beams **302**, the end of cross braces **304** are tightened against flange **306**. In this way, a generally square or rectangular shaped member is formed that is generally strong and rigid.

Once spreader beams **302** and cross braces **304** are assembled, the lower surface of spreader beams **302** is placed on top of the upper surface of support member **202**. Arrangement shown, spreader beams **302** extend in approximate perpendicular alignment to the length of support member **202**. Spreader beams **302** are slid along the upper surface of support member **202** until the desired position is located and mounting brackets **314** are installed on the upper surface of spreader beams **302** by aligning holes **322** in bottom plate **316** with the desired holes **324** in the upper surface of spreader beams **302**.

Mounting brackets **314** are connected to catwalk system **10** by placing the lower surface of bottom cord **24** upon the upper ends of opposing center plates **320**. In this way, mounting brackets **314** engage and support catwalk system **10**. The interior surface of the upper end of side plate **318** is positioned in flat and flush engagement with the exterior surface of bottom cord **24**. The holes **328** in side plate **318** are aligned with the holes **122** in bottom cord **24** and fasteners **120** are inserted through the holes **328** in side plate **318**, the holes **122** in bottom cord **24** and the holes **124** in end plate **102**. In this way, mounting bracket **314** is attached to catwalk system **10**.

When mounting brackets **314** are installed on bottom cords **24** of catwalk system **10**, end plates **26** of adjacent side trusses **20** are positioned between adjacent mounting brackets **314**. However, due to the elevation of center plates **320** above bottom plate **316** of mounting bracket **314**, the lower edge of end plates **26** is in engagement with or is positioned slightly above the upper surface of spreader beam **302**. As such, in this way, the use of mounting brackets **314** allows installation of spreader beams **302** along the length of catwalk system **10** despite the presence of end plates **26** that extend downward from the bottom cord **24**. In addition, the use of mounting brackets **314** and spreader beams **302** facilitates placement of mounting bracket **314** directly below a vertical post **28**, which provides a rigid transfer of support from the bottom cord **24** to the top cord **22**. In addition, the use of mounting brackets **314** and spreader beams **302** facilitates strengthening of joint **34** by allowing the passage

of fasteners **120** through side plate **318** of mounting bracket **314** as well as through bottom cord **24** as well as through end plate **102**.

Once installed, spreader beams **302** distribute support across a span or section of catwalk system **10** thereby ensuring proper support is provided to catwalk system **10**. As such a spreader beam system is presented that resolves many of the problems in the art. Namely, the spreader beam system is easy to install, provides adequate support, is easy to assemble, is adjustable, can be installed along any portion of the catwalk system, among countless other improvements and advantages.

From the above discussion it will be appreciated that the catwalk floorbeam connection system presented herein improves upon the state of the art.

Specifically, the catwalk floorbeam connection system presented herein: is easy to assemble; reduces the labor required to assemble; reduces assembly errors; speeds the assembly process over prior art systems; is difficult to misassemble; is durable; has a long useful life; is rigid; can be used in a great number of applications; can be used with a wide variety of equipment; is relatively inexpensive; is easy to manufacture; has a robust design; is high quality; can be used with any grain bin; is dimensionally accurate; eliminates the need to weld in the field; has tight dimensional tolerances; allows catwalks to be shipped in a disassembled state and assembled on site; that reduces shipping costs; that provides a pocket that receives an end of the floorbeams therein, among countless other advantages and improvements.

It will be appreciated by those skilled in the art that other various modifications could be made to the device without parting from the spirit and scope of this disclosure. All such modifications and changes fall within the scope of the claims and are intended to be covered thereby.

What is claimed:

1. A catwalk system, comprising:

a first floorbeam;

the first floorbeam extending a length between a first end and a second end;

a first side truss;

the first side truss extending a length between opposing ends;

the first side truss having a first bottom cord;

the first side truss having a first pocket formed by a first bottom plate and a first side plate and a second side plate;

wherein a portion of the first side plate and a portion of the second side plate extends outward past the first bottom plate and engages with a top side of the first bottom cord of the first side truss;

wherein the first side plate and the portion thereof has a planar surface facing toward an interior of the first pocket;

wherein the second side plate and the portion thereof has a planar surface facing toward the interior of the first pocket;

a second side truss;

the second side truss extending a length between opposing ends;

the second side truss having a second bottom cord;

the second side truss having a second pocket formed by a second bottom plate and a third side plate and a fourth side plate;

wherein a portion of the third side plate and a portion of the fourth side plate extends outward past the second bottom plate and engages with a top side of the second bottom cord of the second side truss;

wherein the third side plate and the portion thereof has a planar surface facing toward an interior of the second pocket;

wherein the fourth side plate and the portion thereof has a planar surface facing toward the interior of the second pocket;

wherein the first end of the first floorbeam is inserted in the first pocket of the first side truss and the second end of the first floorbeam is inserted in the second pocket of the second side truss thereby connecting the first side truss to the second side truss.

2. The system of claim **1**, wherein the first pocket has an open upper end configured to permit the first end of the first floorbeam to be lowered into and removed from the open upper end of the first pocket.

3. The system of claim **1**, wherein the first pocket has an open upper end configured to permit the first end of the first floorbeam to be lowered into and removed from the open upper end of the first pocket; and

wherein the second pocket has an open upper end configured to permit the second end of the first floorbeam to be lowered into and removed from the open upper end of the second pocket.

4. The system of claim **1**, wherein the first pocket includes a first wing extending outward from the first side plate and includes a second wing extending outward from the second side plate;

wherein the second pocket includes a third wing extending outward from the third side plate and includes a fourth wing extending outward from the fourth side plate;

wherein the first wing and the second wing engage with a side of the first bottom cord of the first side truss; and wherein the third wing and the fourth wing engage with a side of the second bottom cord of the second side truss.

5. The system of claim **1**, wherein when the first end of the first floorbeam is positioned within the first pocket the first end of the first floorbeam is bolted to the first side plate and the second side plate of the first pocket.

6. The system of claim **1**, wherein the first side truss is positioned parallel to the second side truss.

7. The system of claim **1**, wherein the first side truss has a first top cord and a first plurality of connecting posts operatively connecting the first top cord and the first bottom cord; and

wherein the second side truss has a second top cord and a second plurality of connecting posts operatively connecting the second top cord and the second bottom cord.

8. The system of claim **1**, wherein the first side truss has a first top cord and a first plurality of connecting posts operatively connecting the first top cord and the first bottom cord; and

wherein a first side plate extends outward past the first bottom plate on a first side of a first connecting post of the first plurality of connecting posts;

wherein a second side plate extends outward past the first bottom plate on a second side of the first connecting post; and

wherein the first side of the first connecting post is opposite the second side of the first connecting post.

9. The system of claim 1, wherein the first side truss has a first top cord and a first plurality of connecting posts operatively connecting the first top cord and the first bottom cord;

wherein a first subset of the first plurality of connecting posts extend vertically between the first top cord and the first bottom cord; and

wherein a second subset of the first plurality of connecting posts extend at an angle between the first top cord and the first bottom cord.

10. The system of claim 1, further comprising:

a second floorbeam;

the second floorbeam extending a length between a first end and a second end;

wherein the first side truss has a third pocket formed by a third bottom plate and a fifth side plate and a sixth side plate;

wherein the second side truss has a fourth pocket formed by a seventh side plate and a eighth side plate;

wherein the first end of the second floorbeam is inserted in the third pocket of the first side truss and the second end of the second floorbeam is inserted in the fourth pocket of the second side truss thereby connecting the first side truss to the second side truss;

a first wind truss;

the first wind truss extending between a first end and a second end;

wherein the first end of the first wind truss is connected to the first bottom plate of the first pocket of the first side truss; and

wherein the second end of the first wind truss is connected to the fourth bottom plate of the fourth pocket of the second side truss.

11. A catwalk system, comprising:

a first floorbeam;

the first floorbeam extending between a first end and a second end;

a first side truss;

the first side truss extending a length between opposing ends;

wherein the first side truss has a first top cord, a first bottom cord, and a first plurality of connecting posts operatively connecting the first top cord and the first bottom cord;

the first side truss having a first pocket formed by a first bottom plate and a first pair of side plates;

wherein a planar portion of the first pair of side plates extends outward past the first bottom plate and engages with a top side of the first bottom cord of the first side truss;

a second side truss;

wherein the second side truss has a second top cord, a second bottom cord, and a second plurality of connecting posts operatively connecting the second top cord and the second bottom cord;

the second side truss extending a length between opposing ends;

the second side truss having a second pocket formed by a second bottom plate and a second pair of side plates;

wherein a planar portion of the second pair of side plates extends outward past the second bottom plate and engages with a top side of the second bottom cord of the second side truss;

wherein the first end of the first floorbeam is inserted in the first pocket of the first side truss and the second end of the first floorbeam is inserted in the second pocket of the second side truss thereby connecting the first side truss to the second side truss.

12. The system of claim 11, wherein the first pocket has an open upper end configured to permit the first end of the first floorbeam to be lowered into and removed from the open upper end of the first pocket.

13. The system of claim 11, wherein the first pocket has an open upper end configured to permit the first end of the first floorbeam to be lowered into and removed from the open upper end of the first pocket; and

wherein the second pocket has an open upper end configured to permit the second end of the first floorbeam to be lowered into and removed from the open upper end of the second pocket.

14. The system of claim 11, wherein the first pocket includes a first pair of wings extending outward from the first pair of side plates;

wherein the second pocket includes a second pair of wings extending outward from the second pair of side plates;

wherein the first pair of wings engage with a side of the first bottom cord of the first side truss; and wherein the second pair of wings engage with a side of the second bottom cord of the second side truss.

15. The system of claim 11, wherein when the first end of the first floorbeam is positioned within the first pocket the first end of the first floorbeam is bolted to first pair of side plates of the first pocket.

16. The system of claim 11, wherein the first side truss is positioned parallel to the second side truss.

17. The system of claim 11, wherein a first side plate of the first pair of side plates extends outward past the first bottom plate on a first side of a first connecting post of the first plurality of connecting posts;

wherein a second side plate of the first pair of side plates extends outward past the first bottom plate on a second side of the first connecting post; and

wherein the first side of the first connecting post is opposite the second side of the first connecting post.

18. The system of claim 11, wherein a first subset of the first plurality of connecting posts extend vertically between the first top cord and the first bottom cord; and

wherein a second subset of the first plurality of connecting posts extend at an angle between the first top cord and the first bottom cord.

19. The system of claim 11, further comprising:

a second floorbeam;

the second floorbeam extending a length between a first end and a second end;

wherein the first side truss has a third pocket formed by a third bottom plate and a third pair of side plates;

wherein the second side truss has a fourth pocket formed by a fourth bottom plate and a fourth pair of side plates;

wherein the first end of the second floorbeam is inserted in the third pocket of the first side truss and the second end of the second floorbeam is inserted in the fourth pocket of the second side truss thereby connecting the first side truss to the second side truss;

a first wind truss;

the first wind truss extending between a first end and a second end;

wherein the first end of the first wind truss is connected to the first bottom plate of the first pocket of the first side truss; and

wherein the second end of the first wind truss is connected to the fourth bottom plate of the fourth pocket of the second side truss.

20. A catwalk system, comprising:

a first floorbeam;

the first floorbeam extending a length between a first end and a second end;

a first side truss;

the first side truss extending a length between opposing ends;

the first side truss having a first bottom cord;

the first side truss having a first pocket with an open upper end and formed by a first bottom plate and a first pair of side plates;

wherein a portion of the first pair of side plates extends over a top side of the first bottom cord of the first side truss and engages the top side of the first bottom cord of the first side truss; a second side truss;

the second side truss extending a length between opposing ends;

the second side truss having a second bottom cord;

the second side truss having a second pocket with an open upper end and formed by a second bottom plate and a second pair of side plates;

wherein a portion of the second pair of side plates extends over a top side of the second bottom cord of the second side truss and engages the top side of the second bottom cord of the second side truss;

wherein the first end of the first floorbeam is inserted in the first pocket of the first side truss and the second end of the first floorbeam is inserted in the second pocket of the second side truss thereby connecting the first side truss to the second side truss.

21. A catwalk system, comprising:

a first floorbeam;

the first floorbeam extending a length between a first end and a second end;

a first side truss;

the first side truss extending a length between opposing ends;

the first side truss having a first bottom cord, a first top cord and a first connecting post;

the first side truss having a first pocket formed by a first bottom plate and a first pair of planar side plates;

wherein a portion of the first pair of planar side plates extends over a top side of the first bottom cord of the first side truss;

wherein a first side plate of the first pair of side plates is positioned on a first side of the first connecting post and a second side plate of the first pair of planar side plates is positioned on a second side of the first connecting post wherein the first side of the first connecting post is opposite the second side of the first connecting post;

a second side truss;

the second side truss extending a length between opposing ends;

the second side truss having a second bottom cord, a second top cord and a second connecting post;

the second side truss having a second pocket formed by a second bottom plate and a second pair of planar side plates;

wherein a portion of the second pair of planar side plates extends over a top side of the second bottom cord of the second side truss;

wherein a first side plate of the second pair of planar side plates is positioned on a first side of the second connecting post and a second side plate of the second pair of planar side plates is positioned on a second side of the second connecting post wherein the first side of the second connecting post is opposite the second side of the second connecting post;

wherein the first end of the first floorbeam is inserted in the first pocket of the first side truss and the second end of the first floorbeam is inserted in the second pocket of the second side truss thereby connecting the first side truss to the second side truss.

* * * * *