US 20250283313A1

(19) United States
(12) Patent Application Publication
Wilks
(10) Pub. No.: US 2025/0283313 A1
(43) Pub. Date: Sep. 11, 2025

(54) **WASHABLE FAUCET LEVER WITH CAM-ACTIVATED DETERGENT DISPENSER**

(71) Applicant: **Freeman Wilks**, Sunrise, FL (US)

(72) Inventor: **Freeman Wilks**, Sunrise, FL (US)

(21) Appl. No.: **18/704,780**

(22) PCT Filed: **Dec. 4, 2023**

(86) PCT No.: **PCT/US2023/082397**

§ 371 (c)(1),
(2) Date: **Apr. 25, 2024**

Related U.S. Application Data

(60) Provisional application No. 63/475,719, filed on Dec. 3, 2022.

Publication Classification

(51) **Int. Cl.**
E03C 1/046 (2006.01)
E03C 1/04 (2006.01)

(52) **U.S. Cl.**
CPC ***E03C 1/046*** (2013.01); ***E03C 1/0412*** (2013.01)

(57) **ABSTRACT**

A washable faucet lever with cam-activated detergent dispenser having a lever cartridge having a stem operably coupled to a hand lever and a cam member configured to rotate in a cam axis of rotation parallel to and simultaneous with a lever axis of rotation, a detergent reservoir member configured to house a liquid detergent therein and that includes a reservoir valve, an encasement member defining an enclosed region therein and an outlet, and having an outlet valve, wherein the dispenser includes a piston disposed within the enclosed region, coupled to the cam member with a follower, and operably configured to translate within the enclosed region upon rotating the hand lever in the lever axis of rotation to selectively and simultaneously displace the reservoir valve and outlet valve to permit flow of the detergent through an internal channel of the reservoir member, into the enclosed region, and out through the outlet.

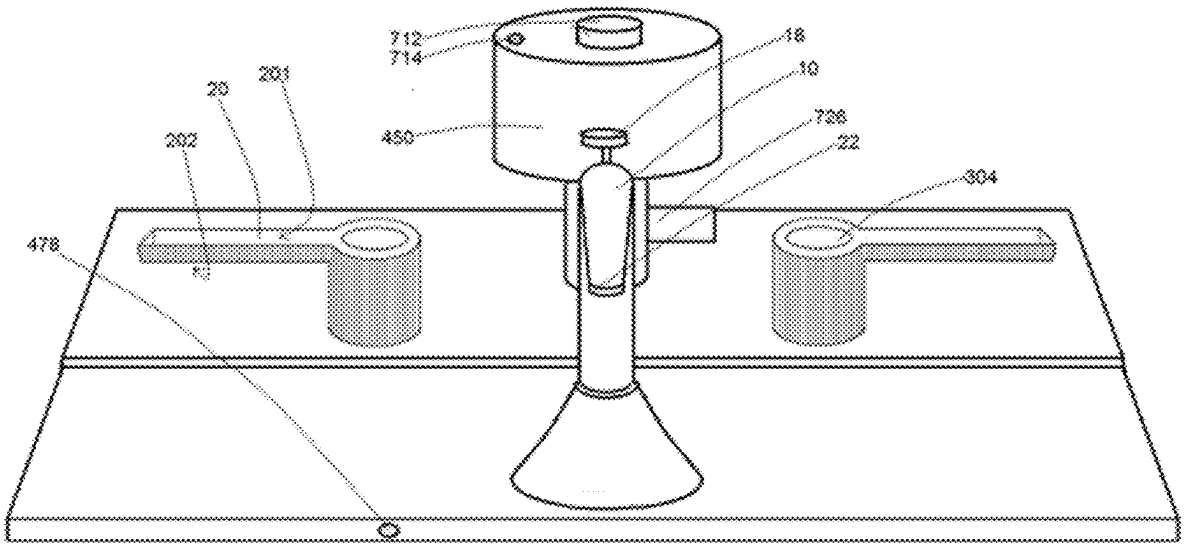

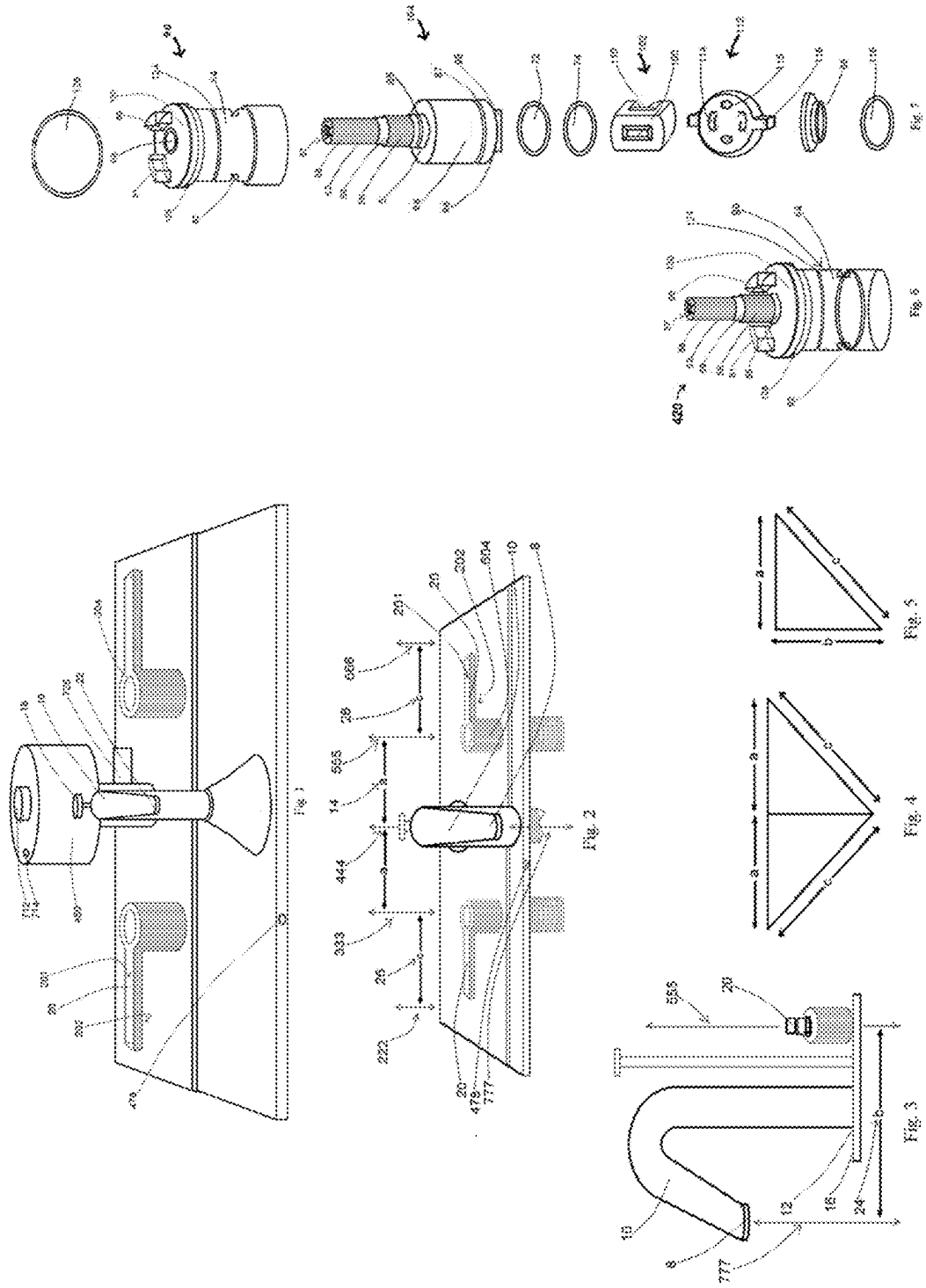
Fig. 1
Fig. 2
Fig. 3
Fig. 4
Fig. 5
Fig. 6
Fig. 7

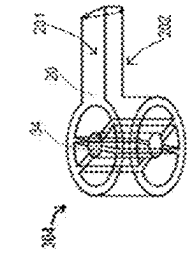

Fig. 11

Fig. 13

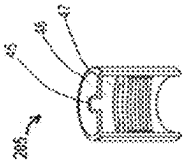

Fig. 10

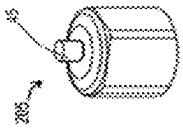

Fig. 9

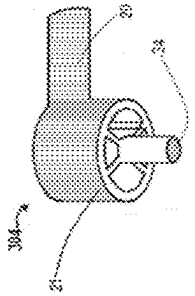

Fig. 12

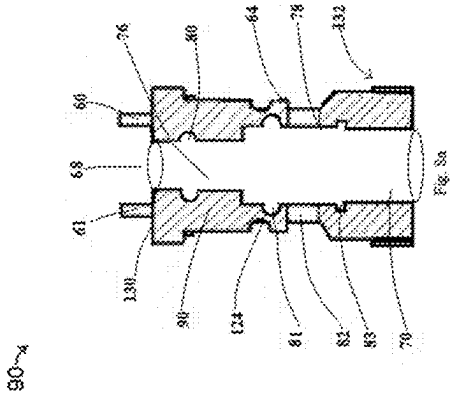

Fig. 3a

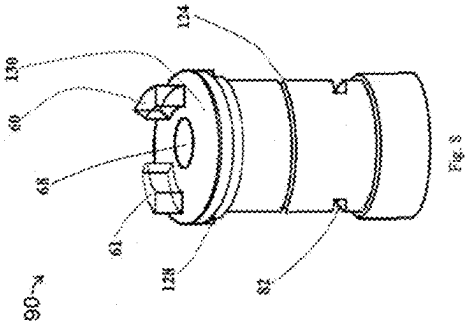

Fig. 3

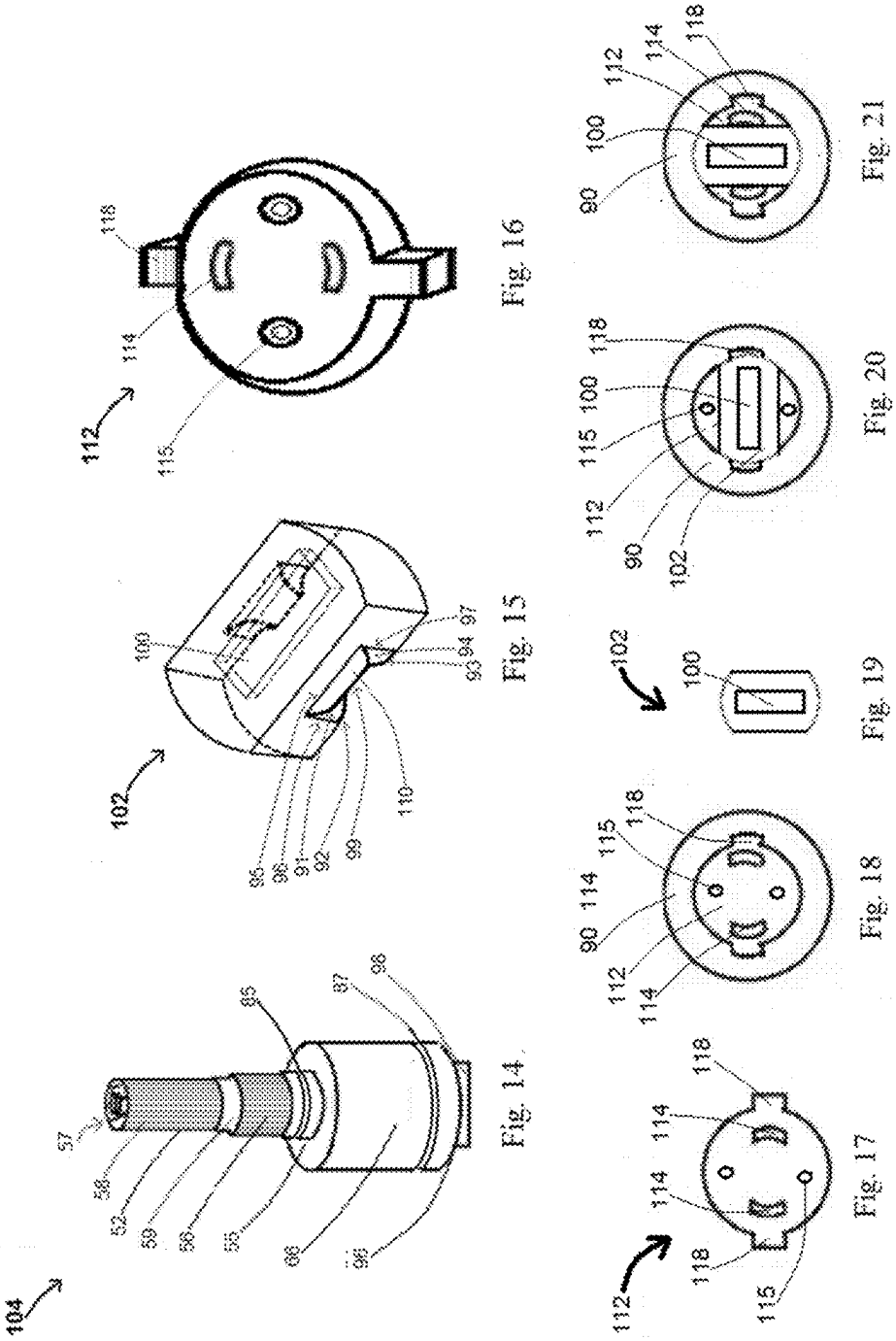
104
57
56
52
59
58
55
66
96
65
97
98
Fig. 14
102
100
95
96
91
92
99
110
93
94
97
Fig. 15
112
115
114
118
Fig. 16
112
114
114
118
118
115
Fig. 17
90
114
115
118
112
114
Fig. 18
102
100
Fig. 19
112
115
100
118
112
90
102
Fig. 20
90
100
112
114
118
Fig. 21

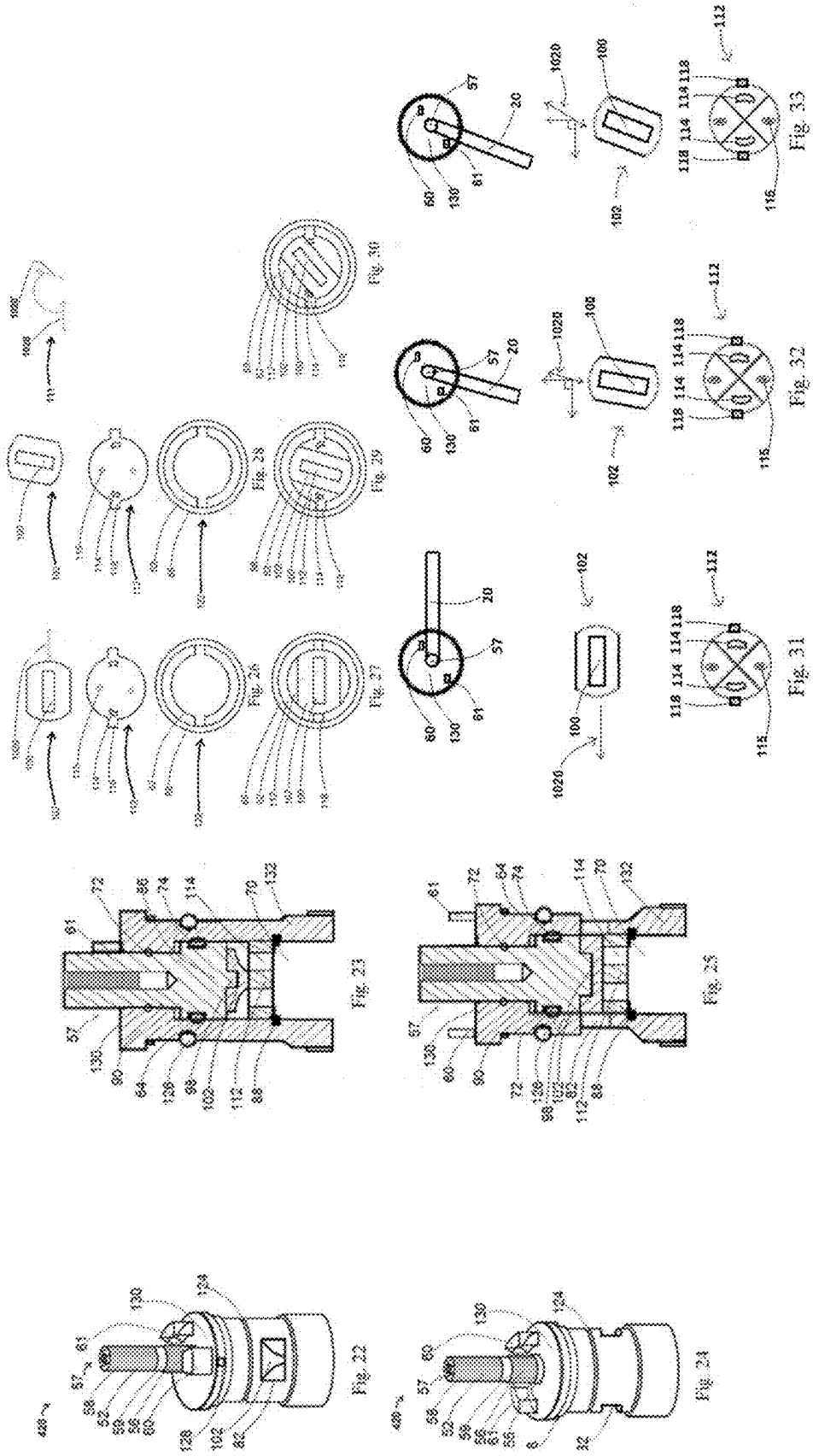
Fig. 22
Fig. 23
Fig. 24
Fig. 25
Fig. 26
Fig. 27
Fig. 28
Fig. 29
Fig. 30
Fig. 31
Fig. 32
Fig. 33

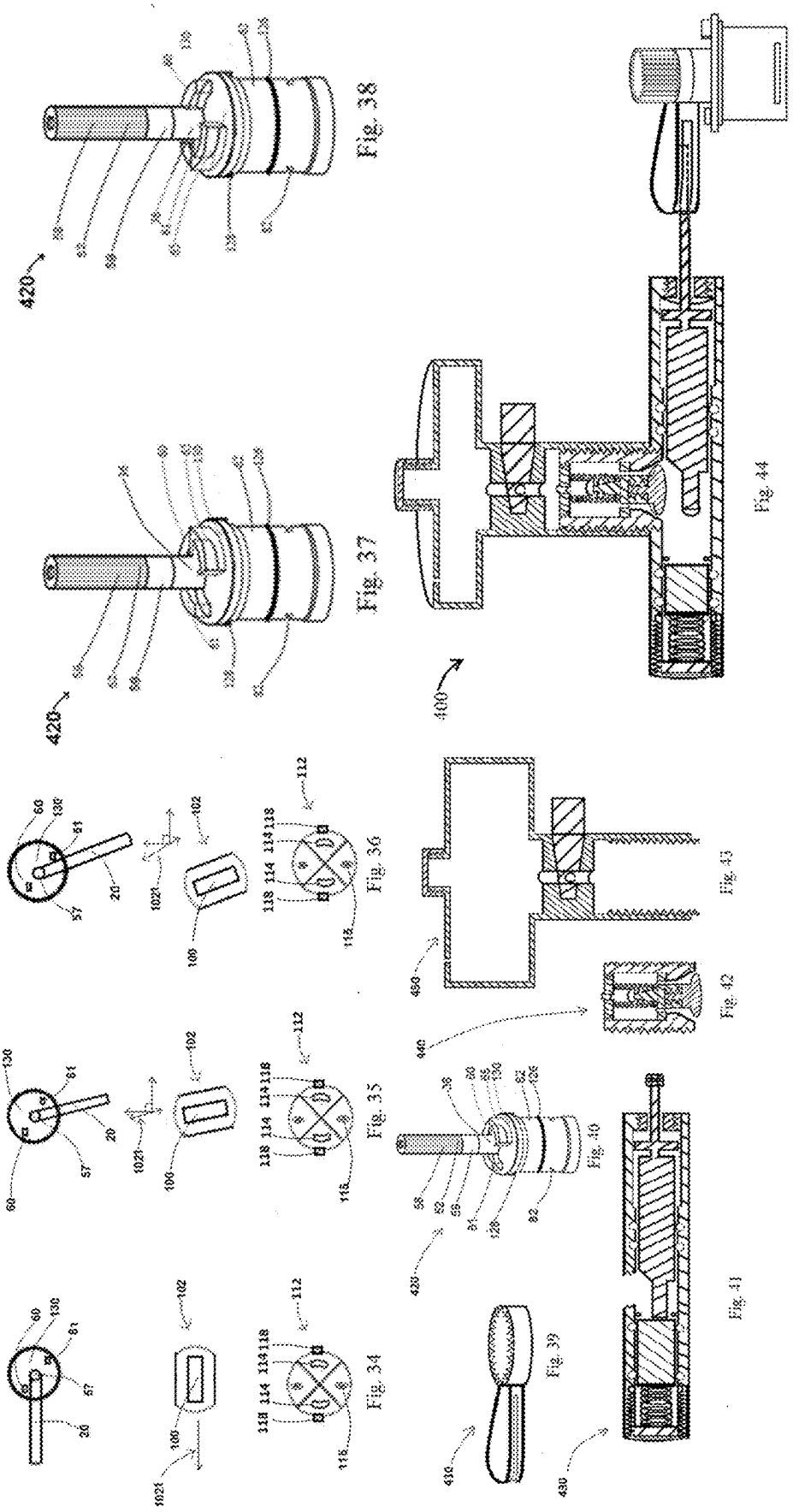
Fig. 34
Fig. 35
Fig. 36
Fig. 37
Fig. 38
Fig. 39
Fig. 40
Fig. 41
Fig. 42
Fig. 43
Fig. 44
420
400
430
440
450
410

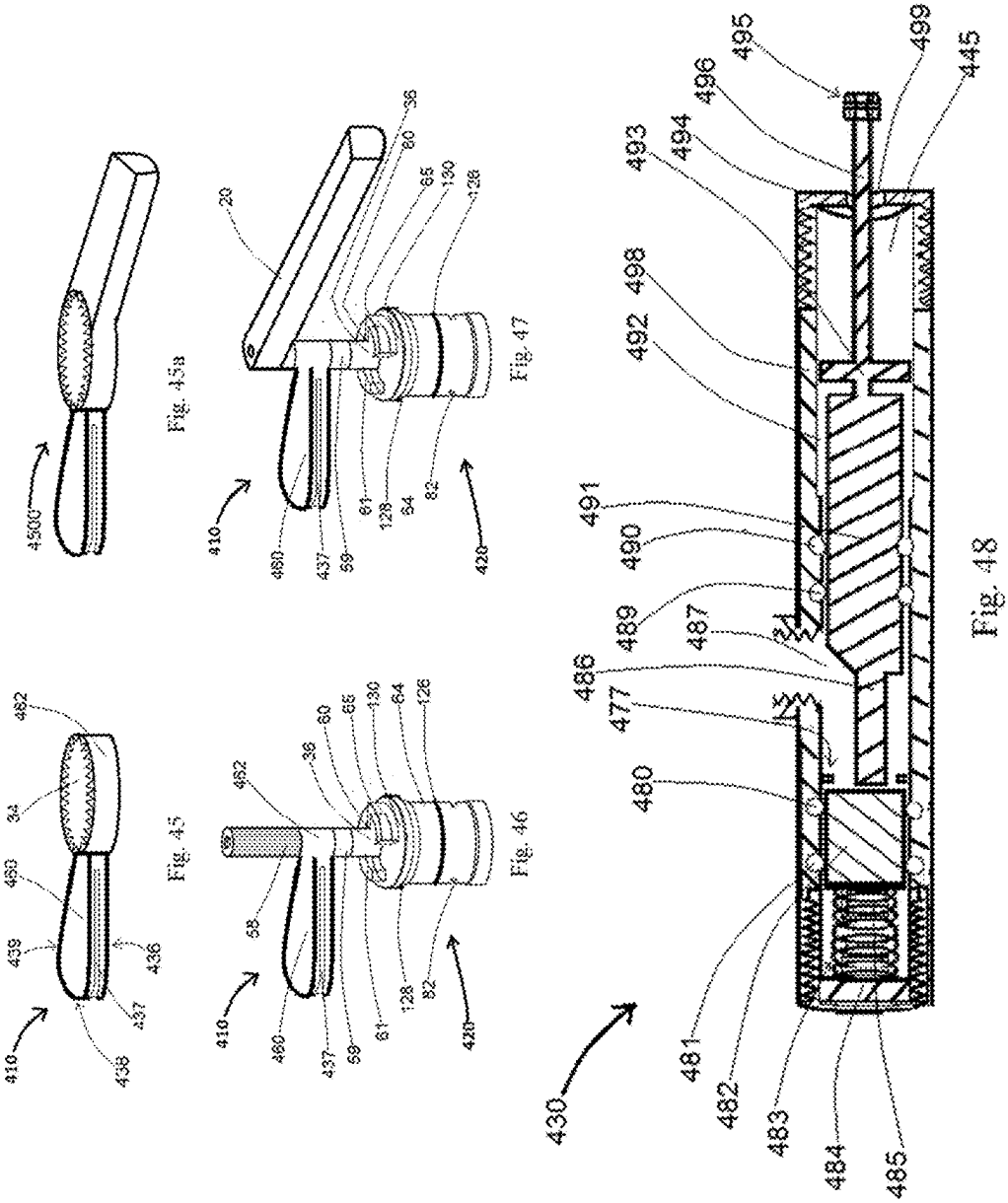
4500
Fig. 45a
410
438
439
450
34
462
437
436
Fig. 45
410
460
437
59
61
128
54
82
420
20
36
60
65
130
128
Fig. 47
410
460
437
59
61
128
82
420
58
462
36
60
65
130
64
128
Fig. 46
430
481
482
483
484
485
480
477
486
487
489
490
491
492
498
493
494
496
495
499
445
Fig. 48

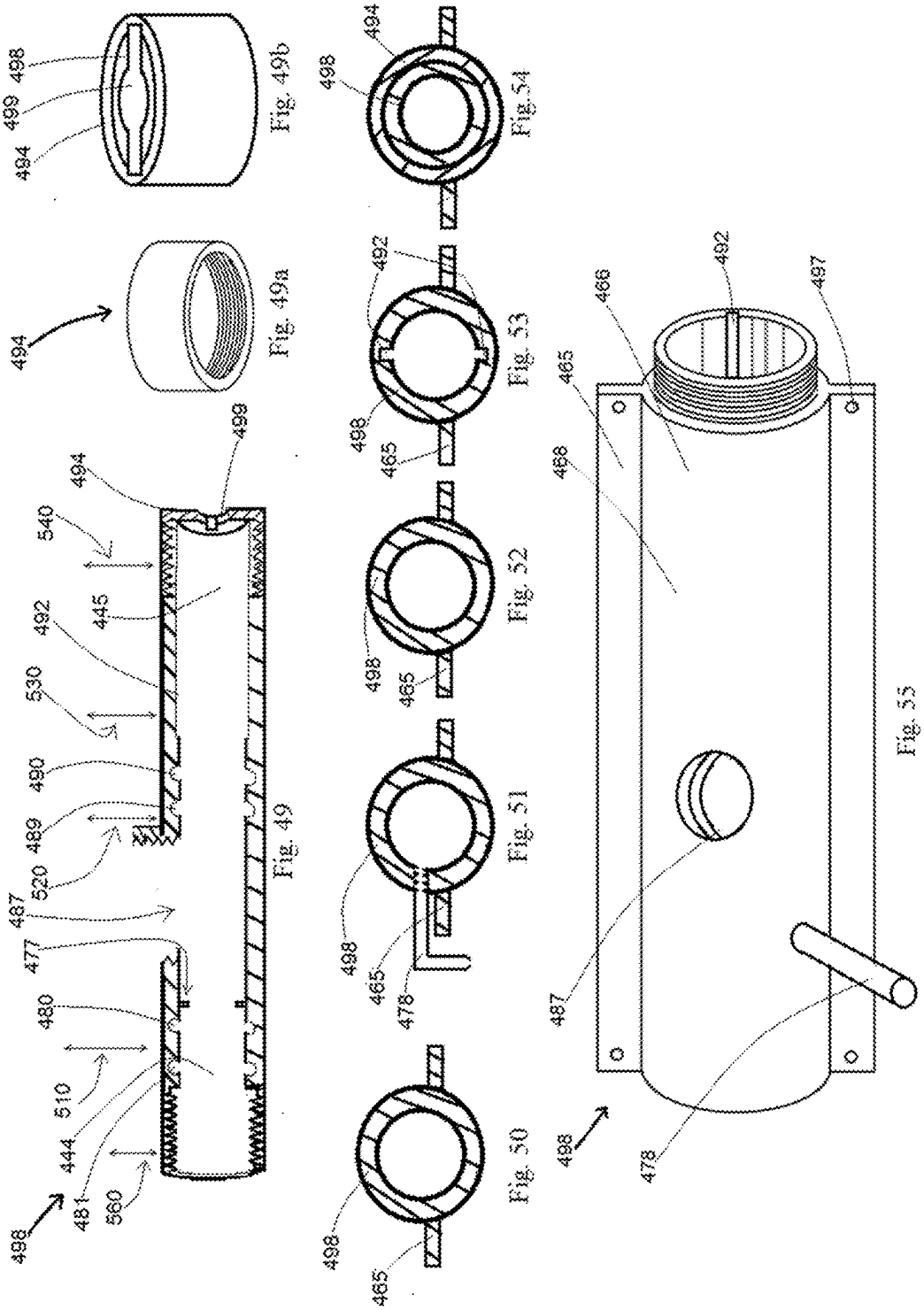
Fig. 49b
Fig. 49a
Fig. 49
Fig. 50
Fig. 51
Fig. 52
Fig. 53
Fig. 54
Fig. 55
498
499
494
540
492
445
530
490
489
520
487
477
480
510
444
481
560
465
478
466
497

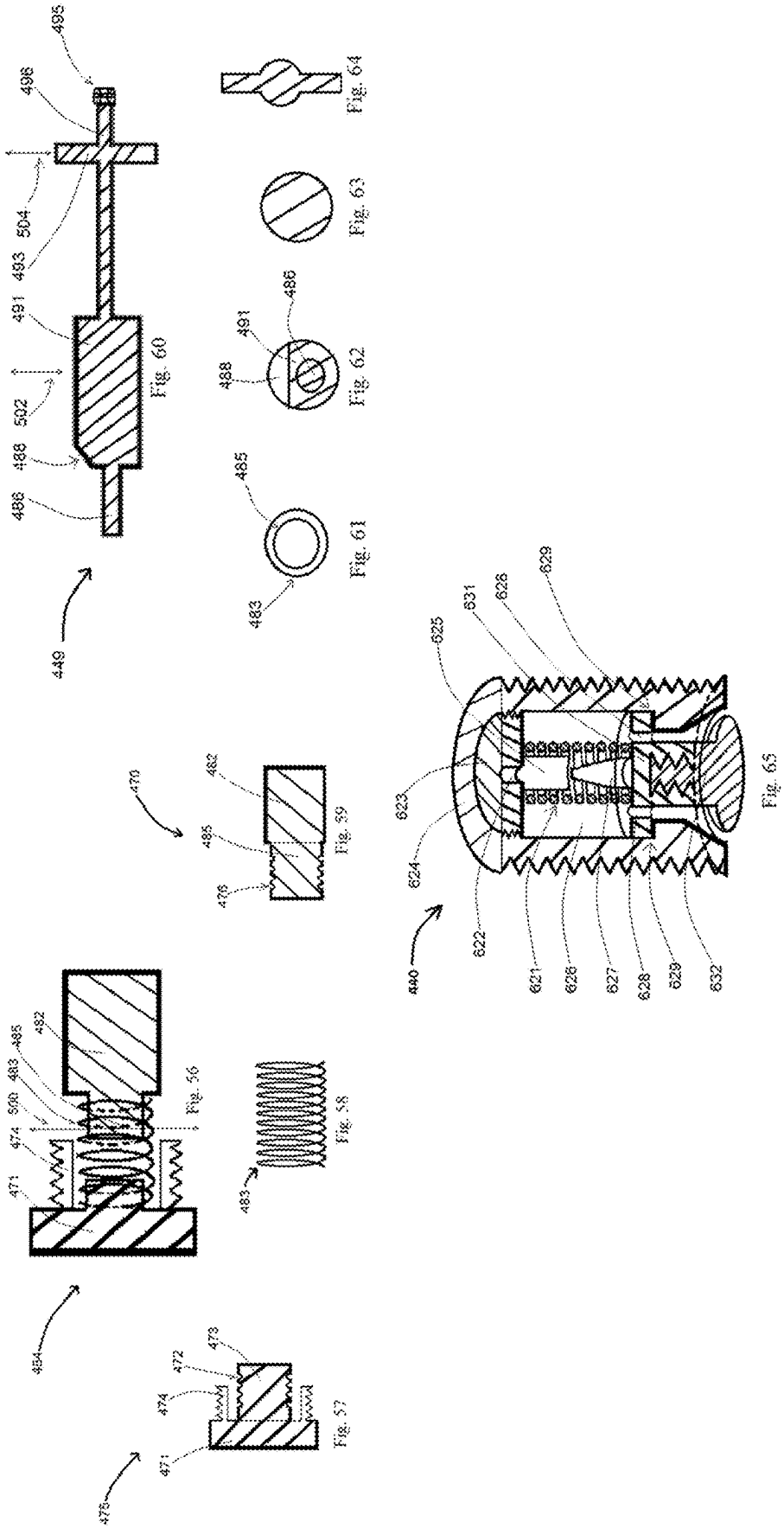
Fig. 60
Fig. 61
Fig. 62
Fig. 63
Fig. 64
Fig. 65
Fig. 56
Fig. 57
Fig. 58
Fig. 59

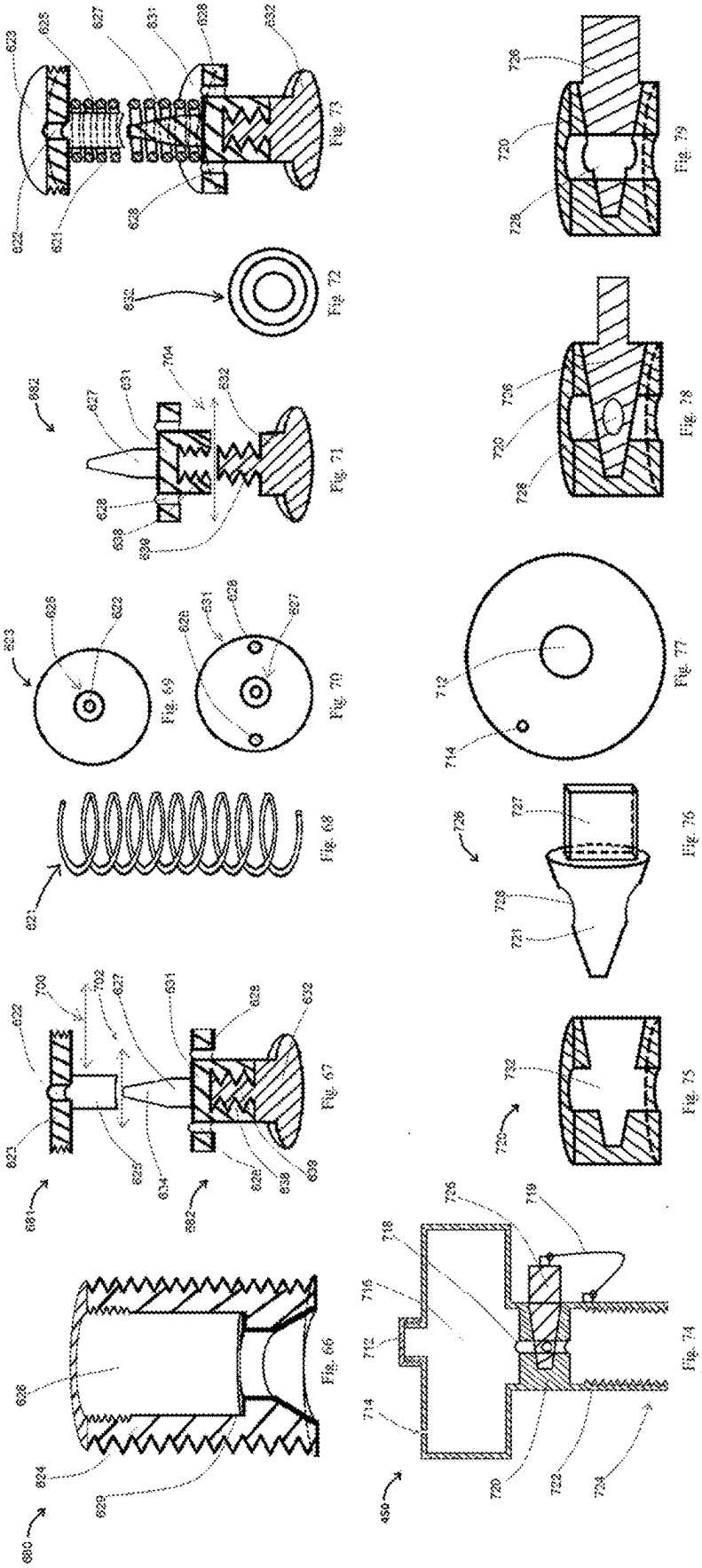
Fig. 66
Fig. 67
Fig. 68
Fig. 69
Fig. 70
Fig. 71
Fig. 72
Fig. 73
Fig. 74
Fig. 75
Fig. 76
Fig. 77
Fig. 78
Fig. 79

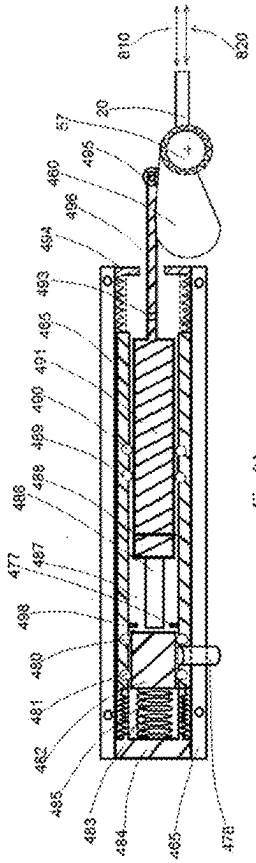

Fig. 81

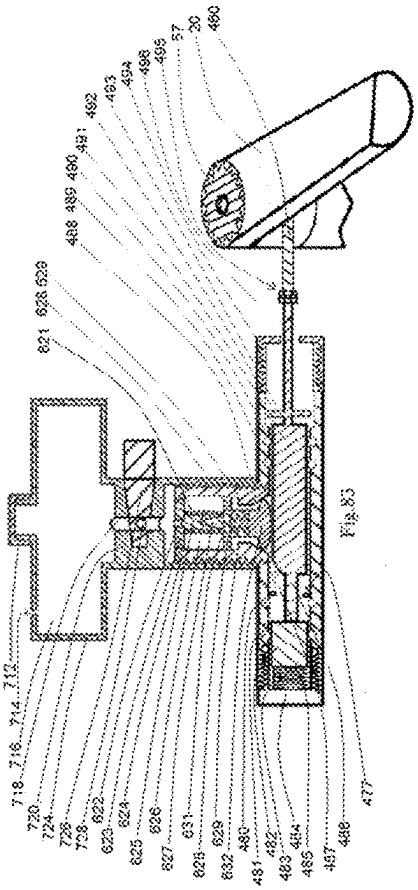

Fig. 83

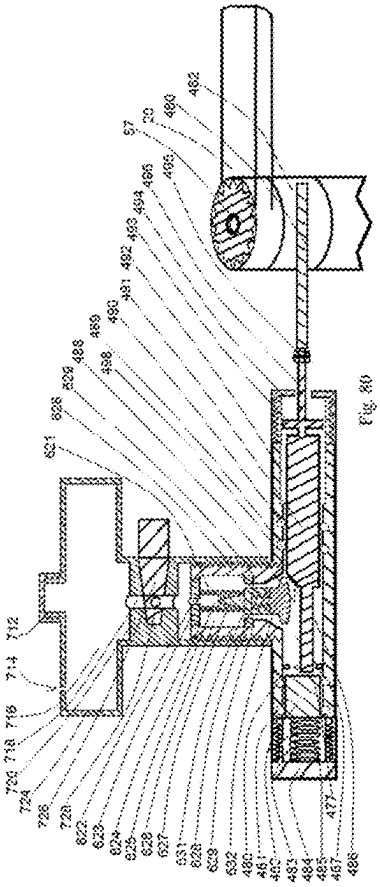

Fig. 80

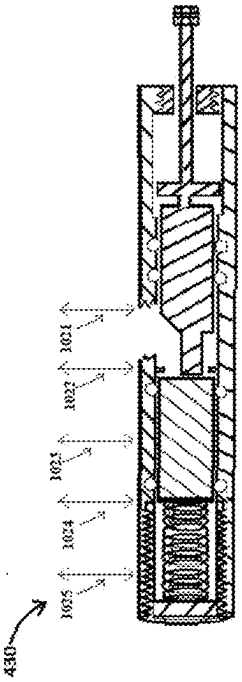

Fig. 82

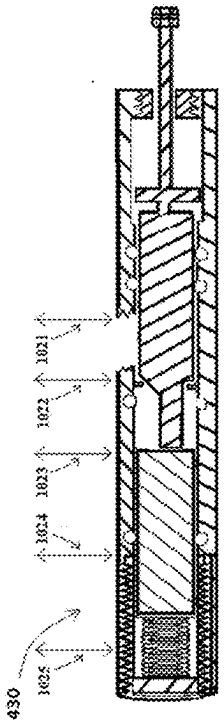

Fig. 85

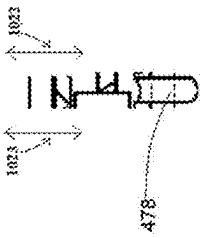

Fig. 85a

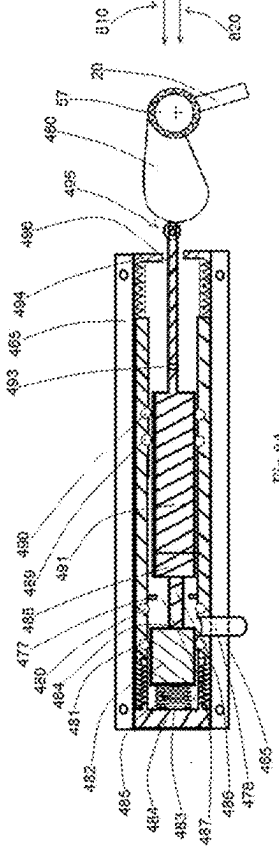

Fig. 84

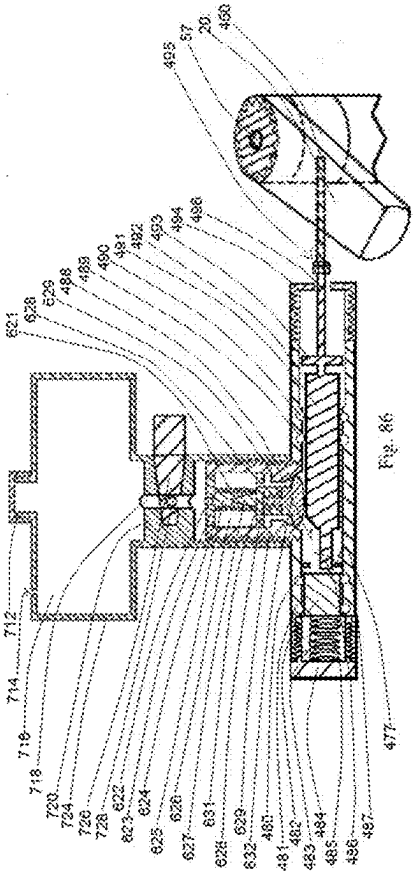

Fig. 86

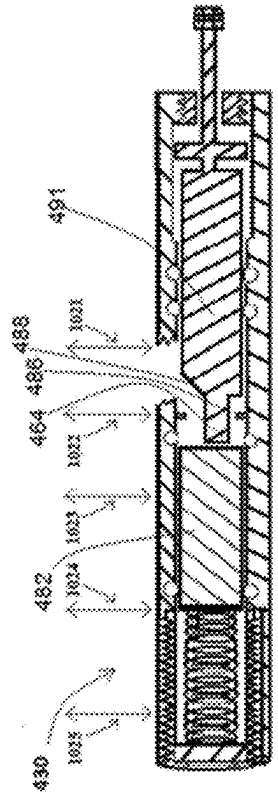

Fig. 87a

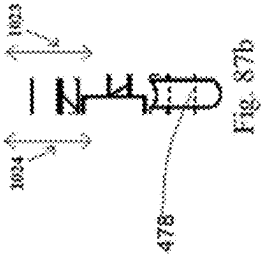

Fig. 87b

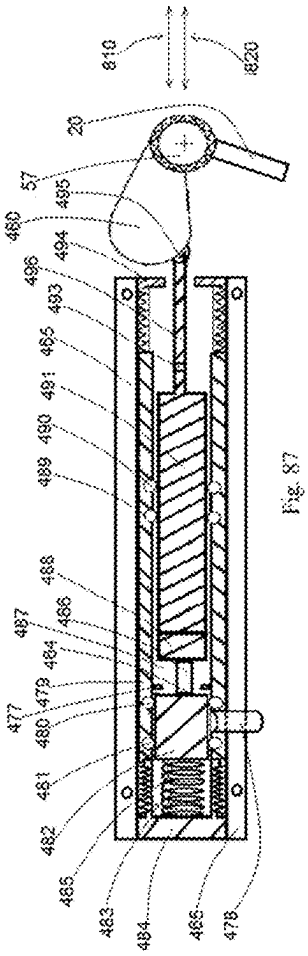

Fig. 87

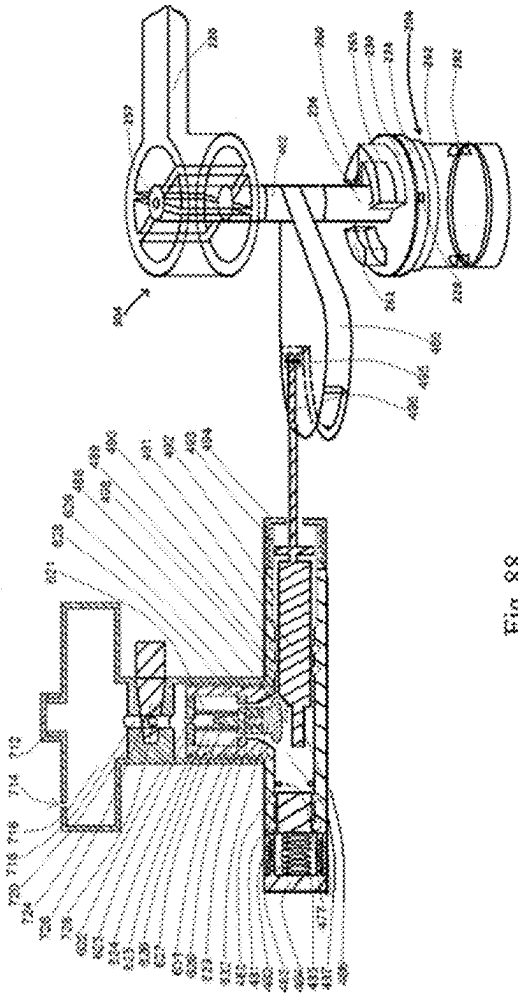

Fig. 88

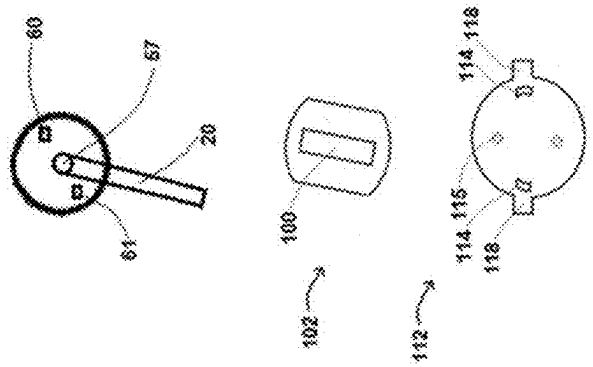

Fig. 91

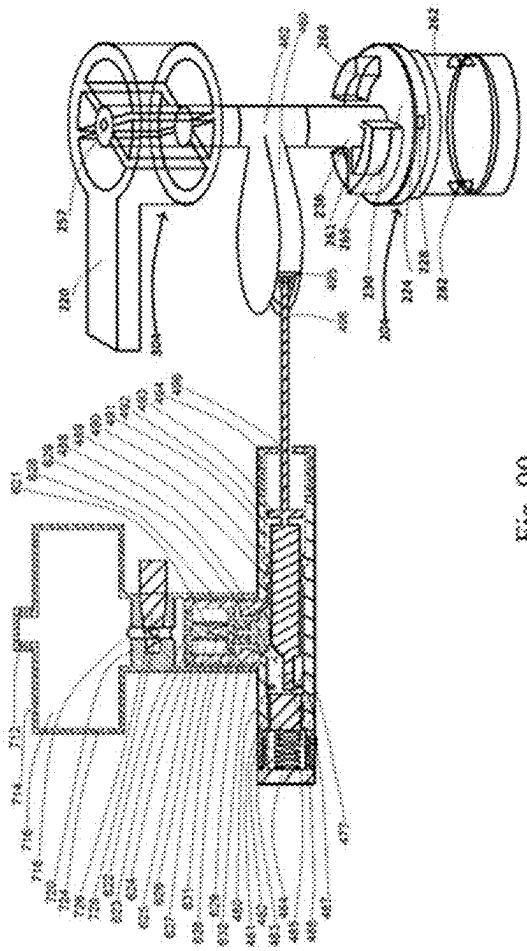

Fig. 90

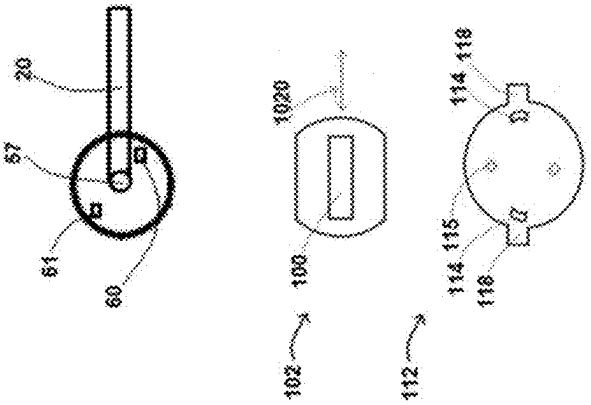

Fig. 89

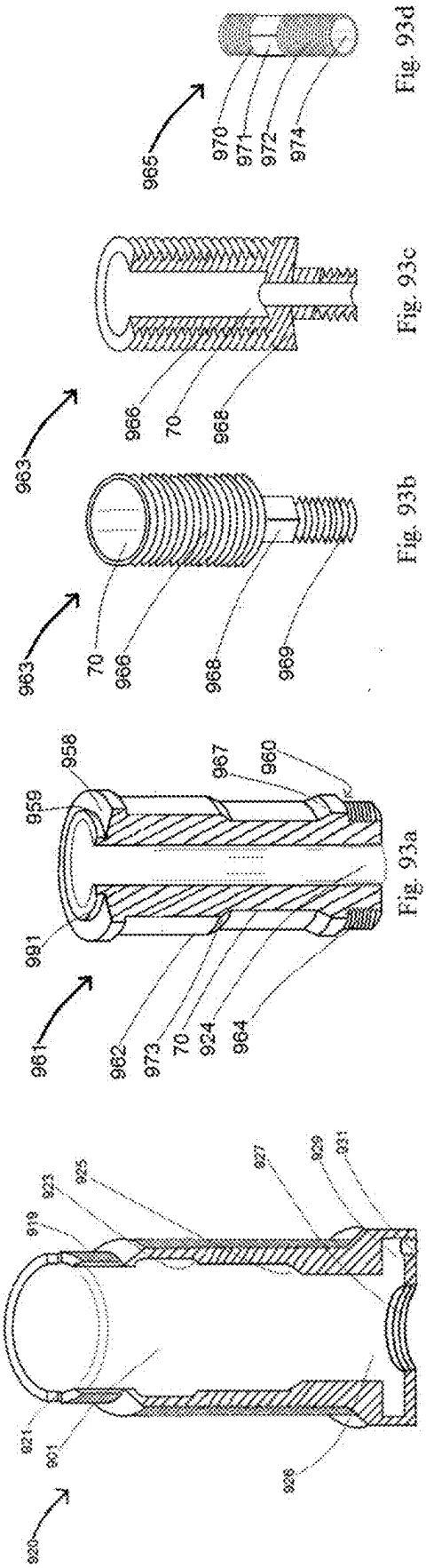

Fig. 92

Fig. 93a

Fig. 93b

Fig. 93c

Fig. 93d

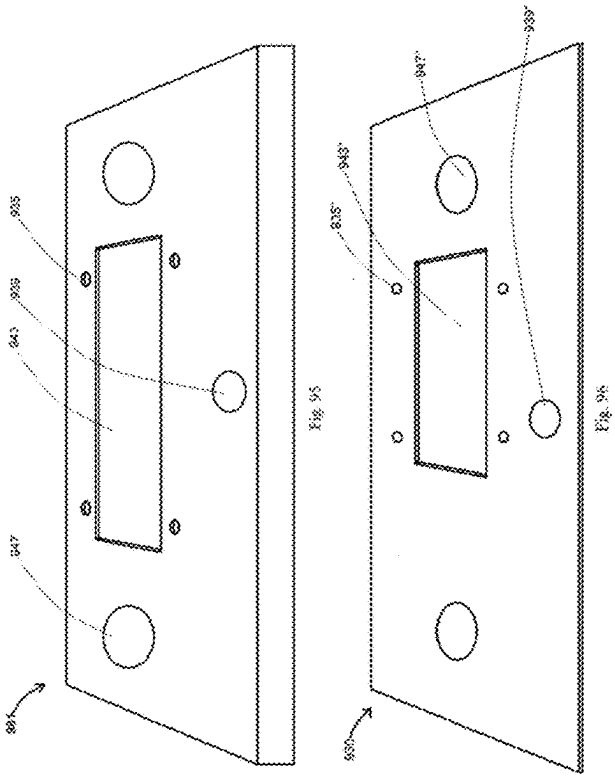

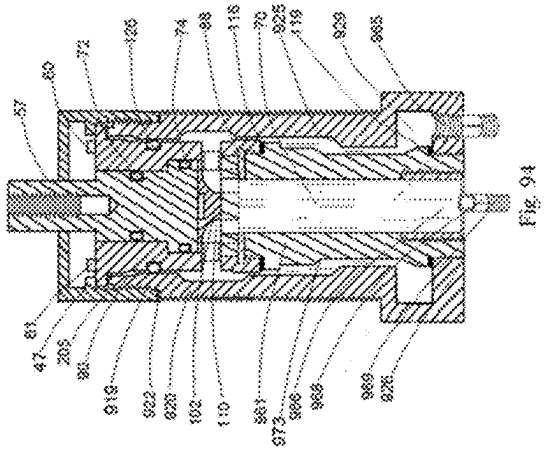

Fig. 94

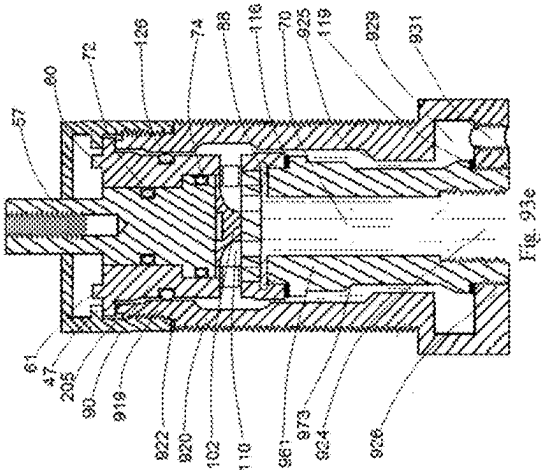

Fig. 93e

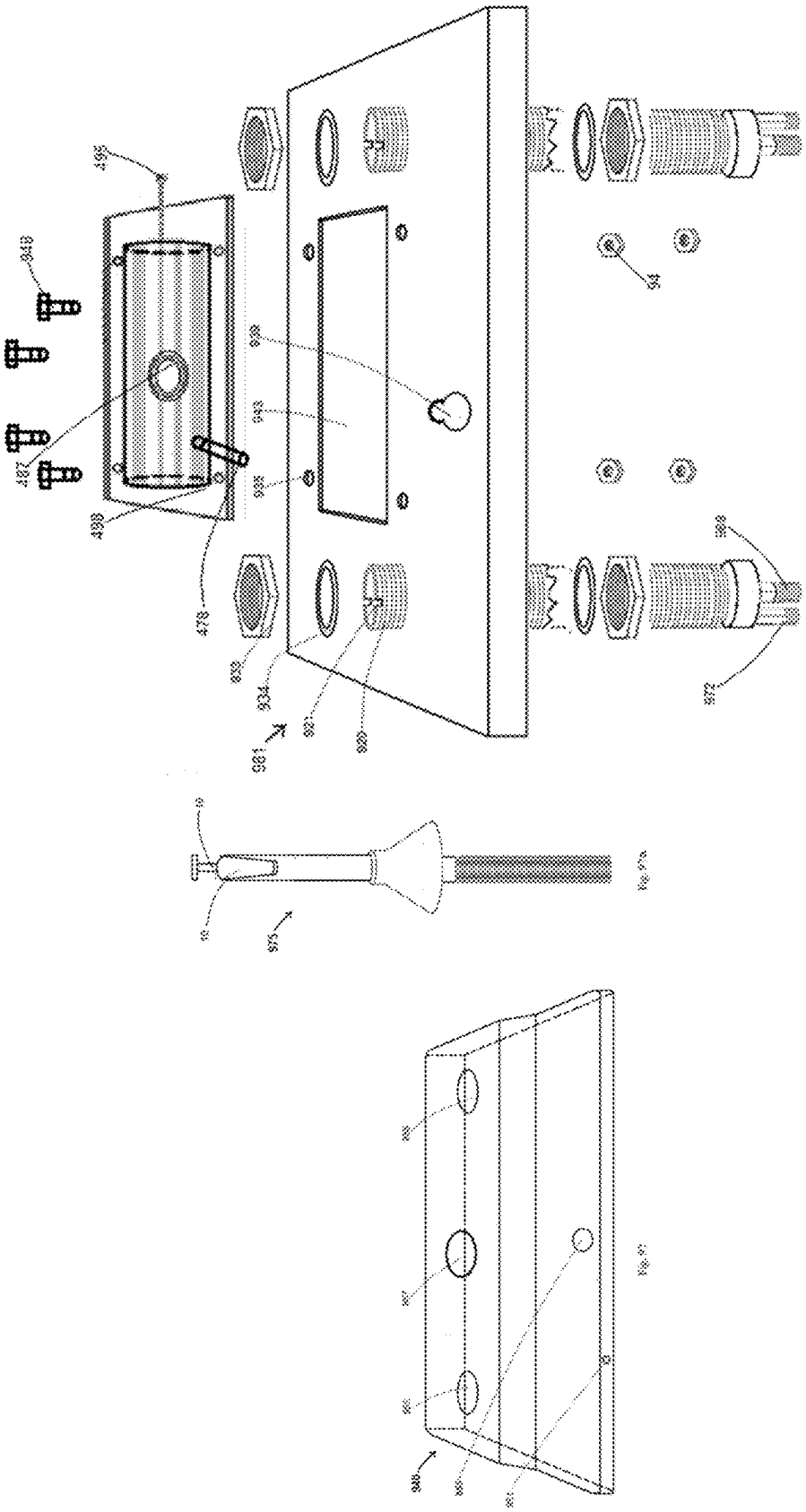
496
410
427
490
478
902
904
906
908
981
910
912
914
975
916
918
920
922
924
926
928
930
932
934
936
938
940
942
944
946
948

Fig. 36

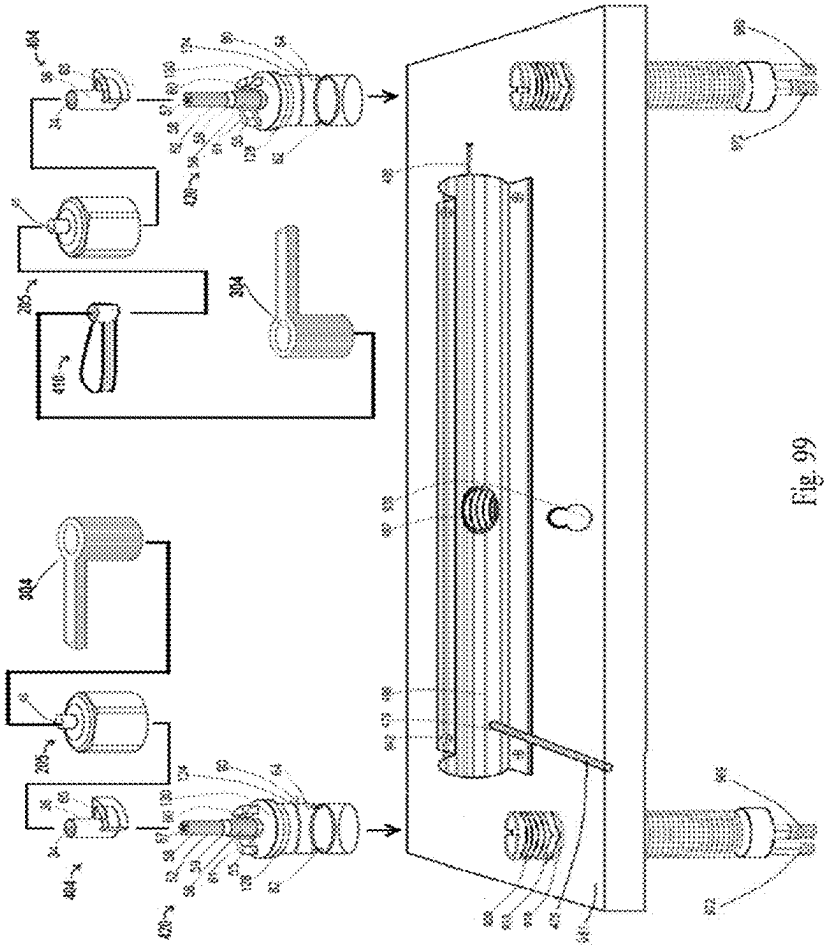

Fig. 99

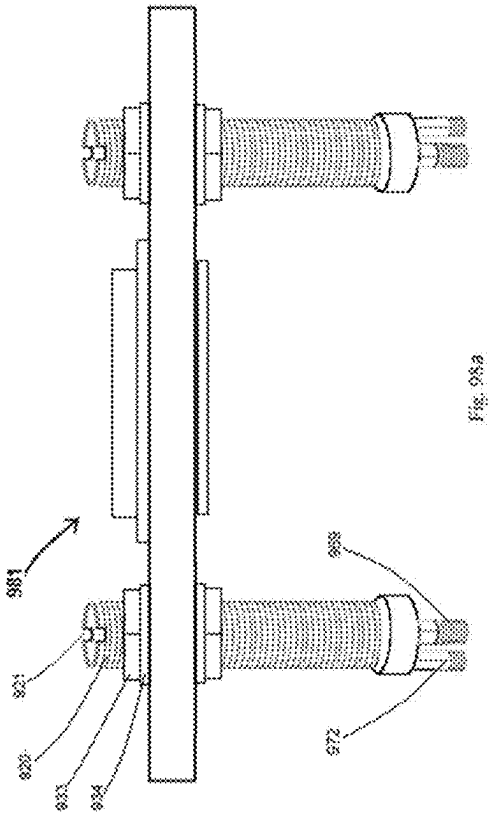

Fig. 98a

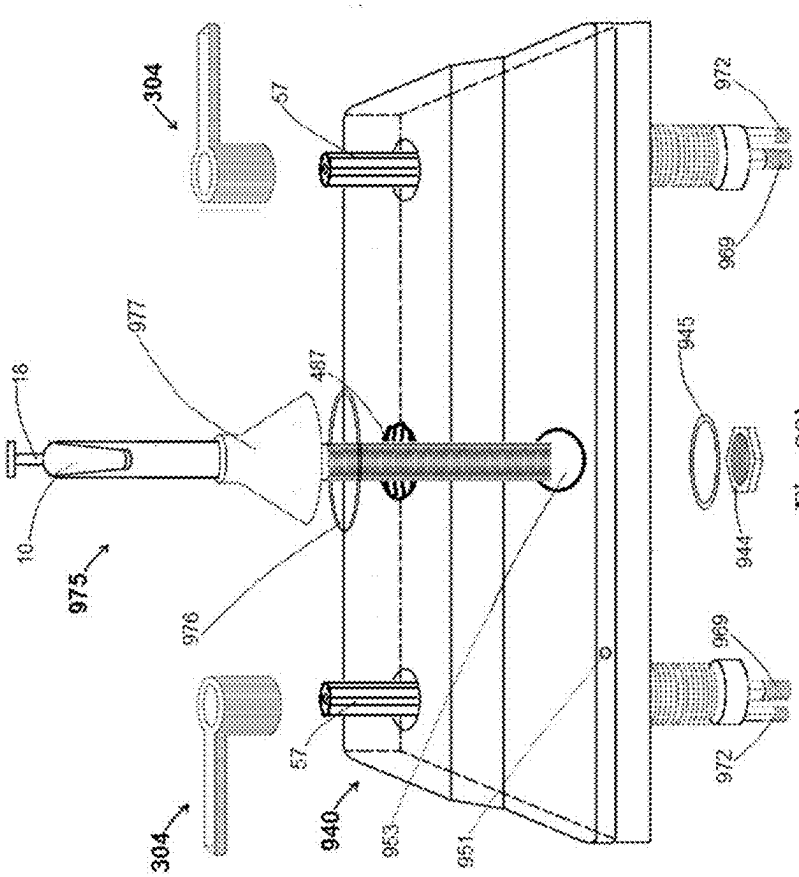

Fig. 99b

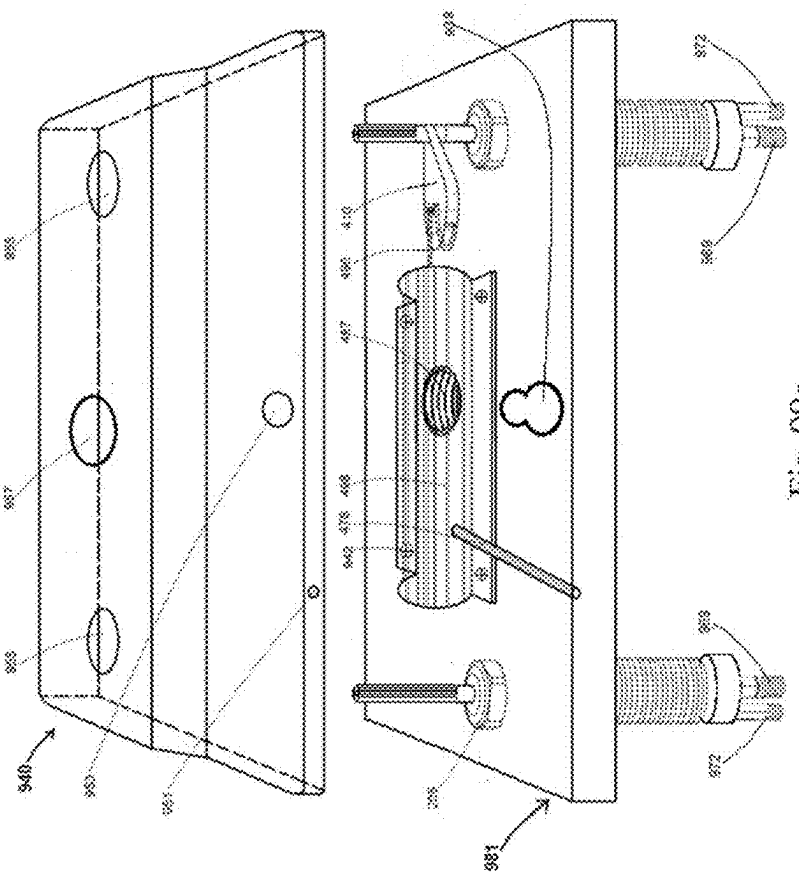

Fig. 99a

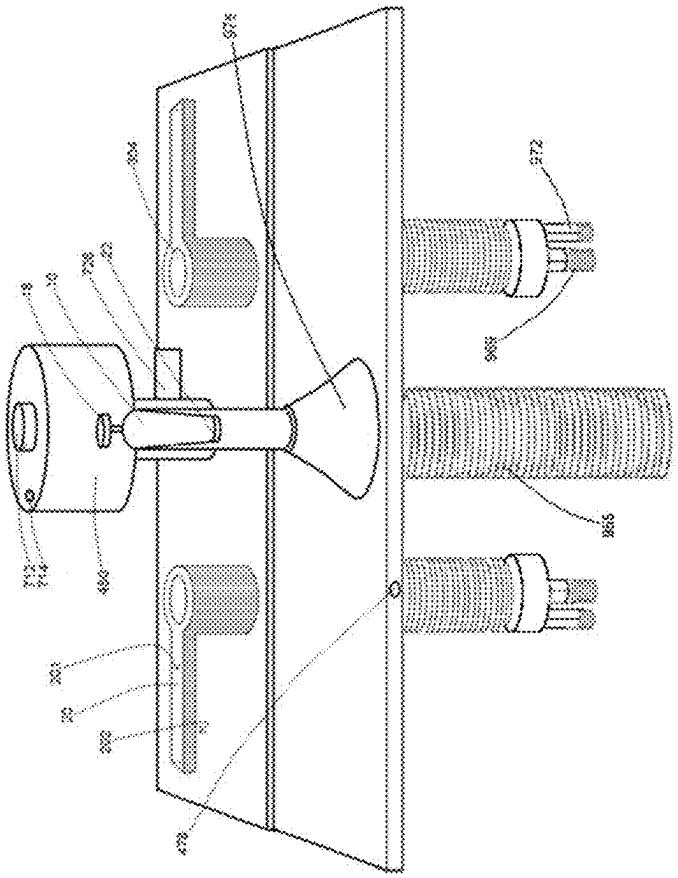

Fig. 101

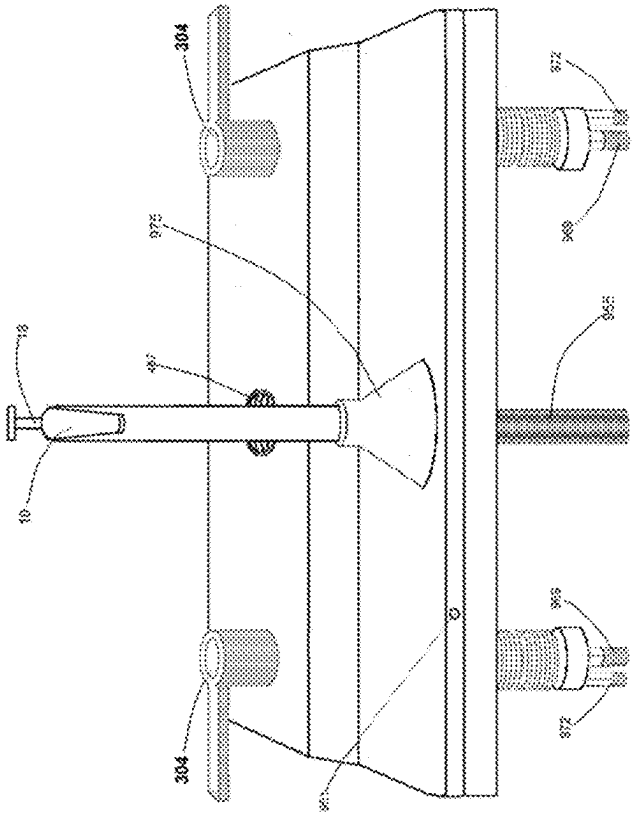

Fig. 100

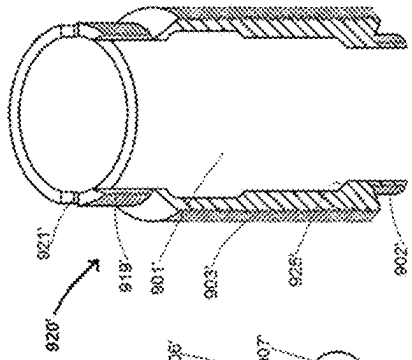

Fig. 103c

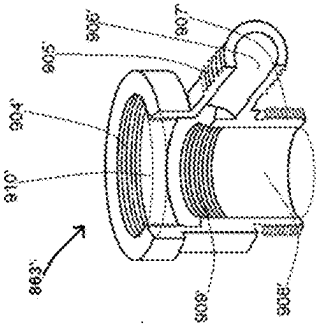

Fig. 103b

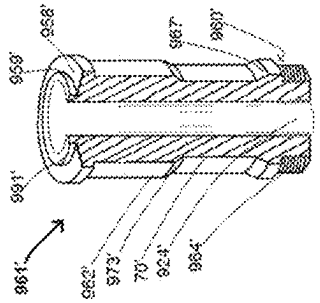

Fig. 103a

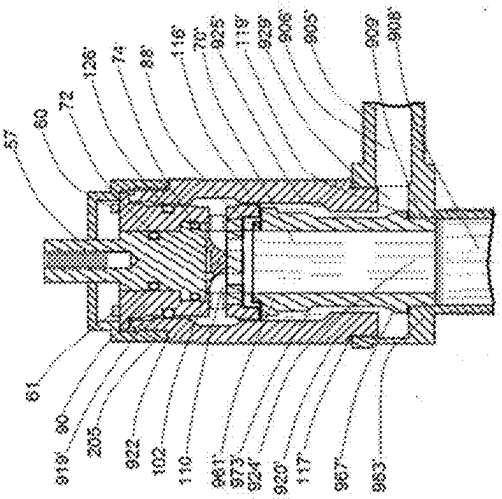

Fig. 104

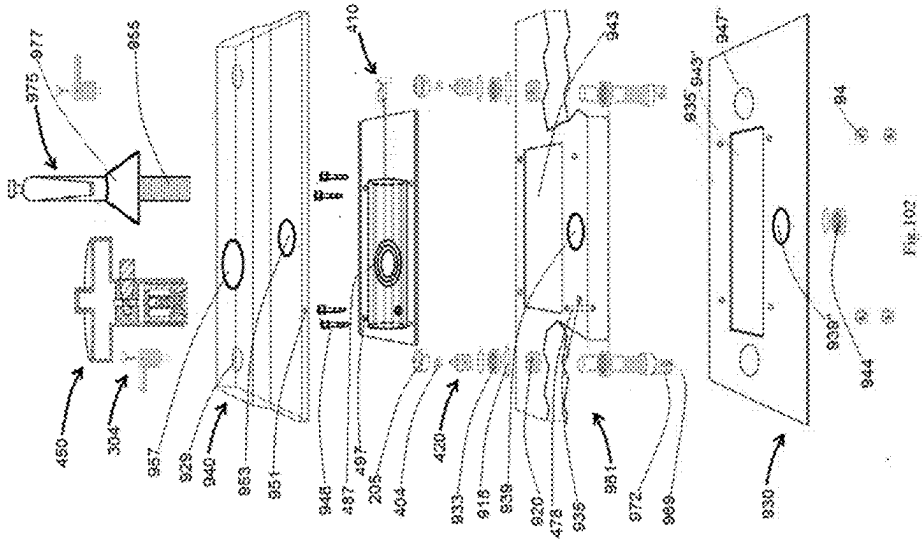

Fig. 102

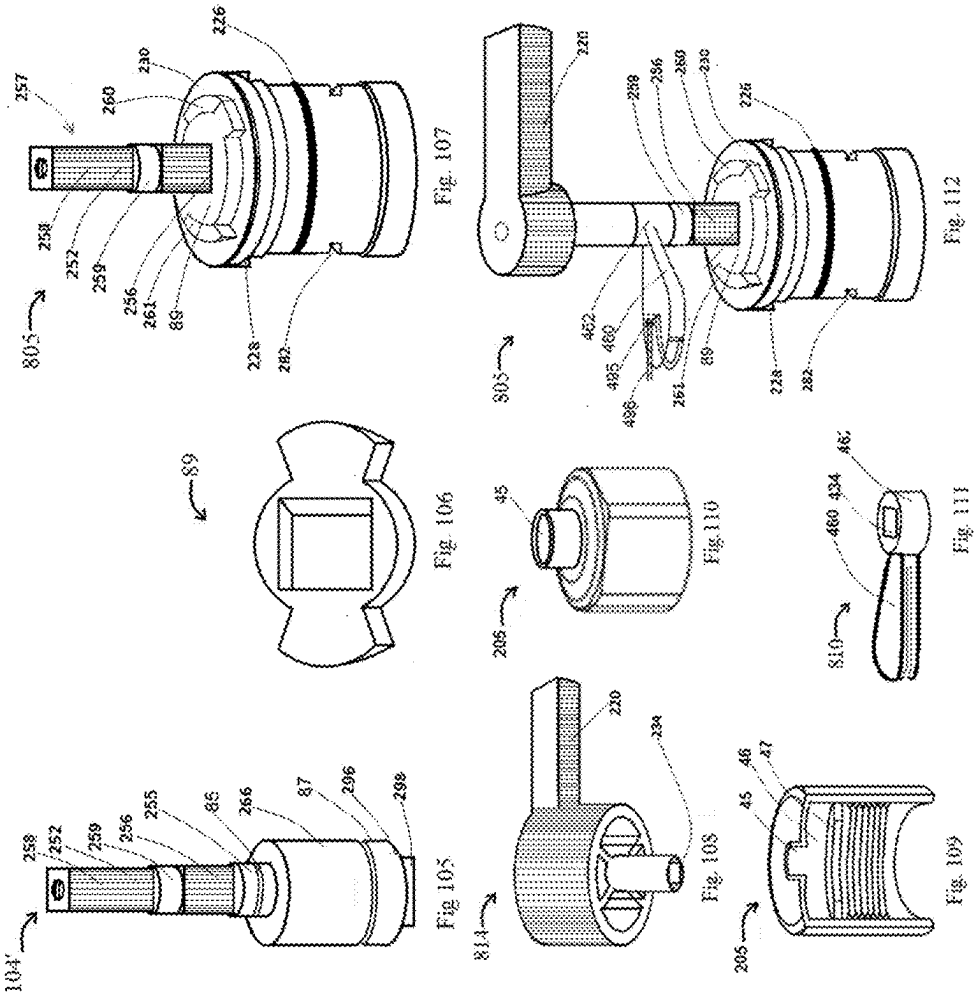
104'
258
252
259
256
255
86
266
87
296
298
Fig. 105
89
Fig. 106
805
257
258
252
259
256
261
89
260
230
226
228
282
Fig. 107
814
220
234
Fig. 108
205
45
Fig. 110
805
221
452
460
485
486
261
89
258
256
259
230
226
228
282
Fig. 112
205
45
46
47
Fig. 109
810
460
434
46
Fig. 111

WASHABLE FAUCET LEVER WITH CAM-ACTIVATED DETERGENT DISPENSER

CROSS-REFERENCE

[0001] This application claims the benefit of provisional application Ser. No. 63/475,717 filed on Dec. 3, 2022 by the present inventor.

BACKGROUND TO INVENTION

[0002] The taps of bathroom faucets are usually activated by handles. Currently, handle-less faucets taps are predominantly located in restrooms of airports among other places. These handle-less faucets taps serve to significantly reduce the spread of contagious diseases that may have a devastating effect on the well-being of human beings amongst other possibilities. These faucets are not economical for most people and require maintenance by trained technicians for reliable and substantial continual and expected timely operation. Additionally, such faucets have a shorter life span in comparison to manually operated faucets.

[0003] Traditional manually operated faucets in homes are usually fitted with cartridge valves requiring a handle for their activation; consequently, everyone in a home or school or locations where faucets with handles are used is exposed to being infected by handle enabled faucets. Currently, handle enabled faucets require that a lever be turned through a right-angle handle for activation, however the spout is set apart from the handle; this is so because one is able to get water running by turning a lever handle through at most a right angle for current faucets.

[0004] Activating the lever can contaminate the lever handle with pathogens. After hands are washed for example, these same hands again are used to activate the lever in order to turn off the flow of water, consequently hands or other parts of the body may again be contaminated by the residual pathogens that initially were left on the lever before hand washing. Current faucets are not designed to wash the lever or dispense detergent or antibacterial solution when a faucet lever is activated.

[0005] There are many designs of manually operated faucet valves that exist; however, there is a need for a manually operated faucet enabled with a lever washable detergent dispensing capabilities. Furthermore for reasons of economy and human wellbeing such a lever washable detergent dispensing faucet should be affordable. Additionally, such a design of a lever washable detergent dish. sing faucet valve should be in keeping with creative modern faucet design features.

[0006] Additionally, the advent of globalization facilitates the rapid spread of diseases that could significantly impact world health and economies on large scale; such diseases previously were localized and thus did not pose a threat to the global economic or well being of humanity. It is conceivable that there are unknown pathogens and that there will always be the threat of life-threatening pathogens at this point of global human development and beyond.

[0007] Electronic eye faucets or handle-less faucets are available, for example, as seen in Stauffer, U.S. Pat. No. 4,767,922, entitled a Hand Presence Activated Water Faucet Controller, or in Chen, U.S. Pat. No. 9,347,207, entitled Faucet Assembly. However, these known faucets are not generally affordable by the global population in general. Consequently, a faucet system that inherently enables showering of the lever while being affordable thus mitigates the spread of pathogens in schools, homes and other institutions and facilities where people share the use of faucets.

[0008] Furthermore, by integrating a lever activated soap dispenser with a washable lever significant reduction in the transmission of pathogens can be achieved.

BRIEF SUMMARY

[0009] According to an embodiment of the disclosed subject matter, the invention provides greater protection against the transmission of pathogens such as the Covid-19 virus, H1N1 virus, flu virus and other transmittable pathogens and includes preferably a valve cartridge that operates efficiently while dispensing detergent and enabling washing of a lever handle when hands are being washed.

[0010] The invention includes a stem assembly that functions to enables the lever handle to be washed by water flowing from the spout of a bathroom faucet tap utilizing preferably a valve cartridge; this is enabled by appropriately dimensioning the length of the lever in relation to the positioning of the spout and faucet cartridge of the invention thus enabling the lever to intercept the line of flow of water from the spout of a faucet using preferably a cartridge valve. The stem also initiates a detergent dispensing unit to dispense detergent from a detergent dispensing unit while being enabled to reduce the rate of flow of solvent through the spout of the faucet unit when the lever is turned its maximum predetermined angle. The stability of the stem is also enabled by the application of a bonnet nut that stabilizes the stem to a cartridge mount. Embodiments of the invention enable detergent to be dispensed prior to the water from a faucet spout when the lever is initially turned or during timely rotation of the lever when water flows from the spout of the faucet as the lever is turned.

[0011] The faucet assembly may have at least one valve cartridge, the assembly comprising a faucet having at least one faucet handle; a fluid conduit influenced by the faucet handle for activating the cartridge valve, a faucet body having an outlet or spout for releasing fluid at an outlet end and an inlet end in fluid communication with the fluid conduit; a base for mounting the faucet handle and faucet body; the base having an upper surface and at least one cartridge comprising a cartridge body having an exterior surface, an interior surface defining a longitudinally extending passage extending from an inlet opening to an outlet opening, and at least one side opening extending transversely through the body from the interior surface to the exterior surface.

[0012] The stem of the cartridge unit is enabled with an upper end portion and a lower end portion. The upper end portion of the stem is enabled with means to rotate in reaction to the turning of a lever. The upper end portion is further enabled with means for initiating activation of a detergent dispensing unit and also with attachments enabling restriction the rotation of the lever to its predetermined maximum angle of rotation. The upper end portion extends outwardly beyond the outlet opening of the body when the stem member is situated in the passage of the body. The lower end portion is cylindrically configured to fit in rotatable relationship with the interior surface of the body when situated within the passage of the body. Additionally, the lower portion has a bottom surface configured to contact and interact with the upper surface of a moveable disc. The geometric side wall of the lower portion configured to fit

within the passage of the body and in rotatable mirrored relationship with the interior surface of the body and with an inwardly extending sidewall portion defining at least one fluid receiving area wherein the receiving area is configured so that it can be rotated to align with the side opening in the body for allowing fluid flow out of the side opening of the body.

[0013] A fluid receiving area is somewhat parabolic in features and bordered by the surface of a fixed disc, the lower surface of the stem and one cartridge body sidewall opening.

[0014] The receiving area is configured so that it can be rotated to align with the side opening in the body for allowing fluid flow out of the side opening of the body; a stationary disk having at least one opening, but preferably two symmetrically arranged there through for allowing passage of fluid from an inlet opening of the body through the side opening of the body when the opening in the stationary disk is aligned with the fluid receiving area in the moveable disk, the stationary disk having a side wall capable of interacting with the interior surface of the body; and a sealing ring for stabilizing and retaining the stationary disk and moveable disk within the passage of the body, the sealing ring designed with tolerance simultaneously capable of mating with the body but ensuring stability and reliability. interacting stress on its function.

[0015] The exterior surface of the body preferably comprises at least one sealing groove for receiving a sealing component such as an o-ring. The exterior surface of the body may also be enabled with means for seating the valve cartridge within or on a fluid conduit; for example, the feature may be a locking tab and the body may comprise two diametric locking tabs on. The upper surface of the cartridge body may be enabled with means for limiting rotational movement of the valve cartridge when in use; for example, there may be two raised preferably rectangular prismatic shaped stop features on a circle of the upper body surface. The position of the raised stop features a function to restrict the rotation of the lever to its maximum predetermined angle of rotation. The lower end portion of the stem may have a groove on the exterior for receiving a seal, such as an o-ring, between the interior surface of the body and the lower end portion of the stem. The interior surface of the cartridge body may also be enabled with a groove near the inlet end of the body for receiving a sealing ring such as an o-ring. The sealing ring may be configured from silicone, nitrile rubber, fluoro-elastomers or other appropriate allied sealing intervention.

[0016] The stationary disc and moveable disc are preferably configured from ceramic.

[0017] The stem preferably is made from metal, preferably stainless steel or brass. The body may be configured from metal such as brass, stainless steel, copper, nickel, alloy metal, polymeric or hard rubber such as polyether ketone, polymethylene copolymer or another compatible appropriate composite. The upper end cartridge body is preferably made from copper, brass, stainless steel. The lever handle is preferably configured from stainless steel.

[0018] The cartridge body preferably has two side openings, and the stationary disk preferably has two openings for allowing passage of water from the inlet opening of the body then through the side openings of the body when the openings in the stationary disk are aligned with the fluid receiving area in the moveable disk.

[0019] Preferably, there are two fluid receiving areas in the moveable disk, and the stationary disk is enabled with locking mechanism that is capable of mating with a mating groove on an exterior surface of the body thus ensuring restrictive rotary motion. The preferably two opening access on the stationary disk is further oppositely aligned to accommodate the function of the lever assembly; the function of the lever assembly is to ensure that the lever can be enabled for washing while ensuring convenient location of the lever relative to the function and positioning of faucet parts when not in use.

[0020] The relational distances between the base of the faucet spout and the base of the spindle handle a, the distance between the vertical line of fluid stream from the faucet spout and the base of the spout b and the distance be tween the vertical line of fluid stream and the base of the faucet handle c satisfy the relationship $\sqrt{a^2+b^2} \leq c$

[0021] The said washable lever handle initiate flow of solvent by activating rotation of the spindle thus a cam attached to the upper end of the stem will rotate when the lever is rotated, hence by attaching a cam to the lever where such a cam influences a follower with connection to a piston where the piston functions as a projection retraction activating unit for dispensing detergent significant reduction in the transmission of pathogens can be achieved.

DESCRIPTION OF DRAWINGS

[0022] The accompanying drawings, which are included to provide further understanding of the disclosed subject matter, are incorporated in and constitute a part of this specification. The drawings also illustrate embodiments of the disclosed subject matter and together with the detailed description serve to explain the principles of embodiments of the disclosed subject matter. No attempt is made to show structural details in more detail than may be necessary for a fundamental understanding of the disclosed subject matter and various ways in which it may be practiced.

[0023] FIG. **1** shows an embodiment of a two-handle embodiment of the invention as seen when a finished unit of the invention is mounted and available for utilization.

[0024] FIG. **2** shows a positioning between the lever, the spout, the cartridge and the base of the spout of a finished unit of the invention. The detergent reservoir **450** and spout escutcheon **977** are not shown in FIG. **2**.

[0025] FIG. **3** shows a right-side view of that of FIG. **2**

[0026] FIG. **4** shows a geometric relation for the positioning of the lever, the spout, the cartridge and the base of the spout for a finished two handle unit of the invention.

[0027] FIG. **5** shows a geometric relation for the positioning of the lever, the spout, the cartridge and the base of the spout for a single handle unit of the invention.

[0028] FIG. **6** shows an embodiment of cartridge unit **420**.

[0029] FIG. **7** shows an exploded view of the cartridge unit of FIG. **6**.

[0030] FIG. **8** shows a view of the cartridge body **90**.

[0031] FIG. **8*a*** shows a diametric section of the cartridge body **90** shown in FIG. **8**.

[0032] FIG. **9** shows a view of bonnet nut **205**.

[0033] FIG. **10** shows a section through the bonnet nut of FIG. **9**

[0034] FIG. **11** shows a view of the net of lever assembly **304**.

[0035] FIG. **12** shows a view of the lever assembly of FIG. **11**.

[0036] FIG. **13** shows a view of a stop interceptor.

[0037] FIG. **14** shows a view of the stem member **104**.

[0038] FIG. **15** shows a view of the moveable disc **102**.

[0039] FIG. **16** shows a view of the stationary disc **112**.

[0040] FIG. **17** shows a planner view of stationary disc **112**.

[0041] FIG. **18** shows the stationary disc inserted in the interior of the lower end **62** of cartridge body **90**.

[0042] FIG. **19** shows a planer view of movable disc **102**.

[0043] FIG. **20** shows an integration of the stationary disc **112** and the movable disc **102** inserted in the lower part **62**.

[0044] FIG. **21** shows an integration of the stationary disc **112**, the moveable disc **102** inserted in the lower part **62** of the cartridge body **90** when in open mode.

[0045] FIG. **22** shows a view of the cartridge from opening **82** in the closure mode.

[0046] FIG. **23** shows a section through the cartridge of FIG. **22**

[0047] FIG. **24** shows a view of the cartridge of FIG. **22** rotated counterclockwise by 90 degrees.

[0048] FIG. **25** shows a view of a section of the cartridge of FIG. **24** in a plane perpendicular to the plane of FIG. **23**.

[0049] FIG. **26** shows the stationary disc **112**, orientation of the moveable disc **102** and a configuration template **122** for receiving stationary disc **112** and moveable disc **102** when the system is in closure mode.

[0050] FIG. **27** shows an integration of the stationary disc **112**, the movable disc **102**, in the configuration template when the cartridge is in closure mode.

[0051] FIG. **28** shows the stationary disc **112**, orientation of the moveable disc **102** and a configurative template **122** for receiving stationary disc **112**, moveable disc **102** when the system is in open mode.

[0052] FIG. **29** shows an integration of the stationary disc **112**, the moveable disc **102** in the configuration template **122** when the cartridge is in open mode and maximum rate of flow is enabled through the faucet spout **10**.

[0053] FIG. **30** shows an integration of the stationary disc **112**, the moveable disc **102** in the configurative template **122** when the cartridge is in open mode and the lever **20** has turned from its at rest position through its maximum predetermined angle of rotation thereby enabling in reducing rate of flow through spout **10** of the faucet by partially blocking openings **114**.

[0054] FIG. **31** shows a configuration in closure mode of the cartridge of the orientation of lever **20**, the stationary disc **112** and the moveable disc **102**.

[0055] FIG. **32** shows a configuration of lever **20**, the stationary disc **112** and the moveable disc **102** when the cartridge is in open mode and maximum rate of flow is enabled through spout **10**. Lever **20** does not abut stop **61**.

[0056] FIG. **33** shows a configuration of lever **20**, the stationary disc **112** and the moveable disc **102** when the cartridge is in open mode and the lever **20** has turned its maximum predetermined angle thereby reducing flow. Lever **20** abuts stop **61**.

[0057] FIG. **34** shows a view of FIG. **31** for a left-handed user.

[0058] FIG. **35** shows a view of FIG. **32** for a left-handed user.

[0059] FIG. **36** shows a view of FIG. **33** for a left-handed user.

[0060] FIG. **37** shows a configuration of the cartridge unit **604** in closed mode. Cam unit **410** and lever unit **304** not shown.

[0061] FIG. **38** shows a configuration of the cartridge unit **604** in open mode. Cam unit **410** and lever unit **304** not shown.

[0062] FIG. **39** shows an embodiment of a cam unit **420**.

[0063] FIG. **40** shows an embodiment of a cartridge unit **410**.

[0064] FIG. **41** shows a section view of a detergent activation unit in a vertical plane of symmetry for an embodiment of a detergent activation unit **430**.

[0065] FIG. **42** shows a section view of a valve for regulating detergent fluid from a fluid reservoir to a detergent activation unit **440**.

[0066] FIG. **43** shows a section of an embodiment of a detergent reservoir unit **450**.

[0067] FIG. **44** shows a configuration of the assembling cam unit **410**, a cartridge unit **420**, with a section view of the detergent activation unit **430**, a section view valve regulating unit **440** and a section view of the detergent reservoir unit **450**.

[0068] FIG. **45** shows labeled parts of cam unit **410**.

[0069] FIG. **45***a* shows an alternate configuration for a cam and lever handle combined.

[0070] FIG. **46** shows the positioning of cam unit **410** on cartridge unit **420**. Bonnet nut **205** is not shown.

[0071] FIG. **47** shows the positioning of cam unit **410** and lever unit **305** on cartridge unit **420**. Bonnet nut **205** is not shown.

[0072] FIG. **48** shows the labeled parts of detergent activation unit **430** in a vertical plane of symmetry.

[0073] FIG. **48***a* shows the labeled parts of detergent activation unit **430** in a horizontal plane of symmetry.

[0074] FIG. **49** shows the labeled parts of the encasement unit **498** for the detergent activation unit in a vertical plane of symmetry for the internal configuration of encasement unit **498**.

[0075] FIG. **49***a* shows a view looking into end cap **494**.

[0076] FIG. **49***b* shows an external view of the end cap **494**.

[0077] FIG. **50** shows a section view through line **560** in a vertical plane at right angles to the cylindrical height of encasement unit **498**.

[0078] FIG. **51** shows a section view in a vertical plane through line **510** at right angles to the cylindrical height of encasement unit **498**.

[0079] FIG. **52** shows a section view in a vertical plane through line **520** at right angles to the cylindrical height of encasement unit **498**.

[0080] FIG. **53** shows a section view in a vertical plane through line **530** at right angles to the cylindrical height of encasement unit **498**.

[0081] FIG. **54** shows a section view in a vertical plane through line **540** at right angles to the cylindrical height of the encasement unit **498**.

[0082] FIG. **55** shows an external view of an embodiment of the detergent activation unit **498**.

[0083] FIG. **56** shows a sectional view embodiment of a valve dispensing unit **484** in a plane with **471**, **474** and **482** in a diametric plane.

[0084] FIG. **57** shows a section view of an embodiment end cap member **475** of the valve dispensing unit **430**.

[0085] FIG. **58** shows an embodiment of the spring member for the valve dispensing unit **483**.

[0086] FIG. **59** shows a section view of an embodiment of a member **470** for the valve dispensing unit **484**.

[0087] FIG. **60** shows a section view in a plane symmetric to the cylindrically disposed height of an embodiment of the piston unit **449** for the detergent activation unit.

[0088] FIG. **61** shows a view through line **500** of FIG. **56** in a plane at right angles to the cylindrically disposed height of member **485**.

[0089] FIG. **62** shows a view from the left of piston unit **449** of FIG. **60**.

[0090] FIG. **63** shows a section view through line **502** in a plane at right angles to the cylindrically disposed height of piston unit **449** for FIG. **60**.

[0091] FIG. **64** shows a section view through line **504** in a plane at right angles to the cylindrical disposed height for member **493**.

[0092] FIG. **65** shows a section view in a vertical plane of the cylindrically disposed inlet detergent valve unit **440**.

[0093] FIG. **66** shows a section view in a vertical plane of encasement **680** for inlet detergent valve unit **440**.

[0094] FIG. **67** shows a relation view in a vertical plane for members **681** and **682** for the inlet detergent valve unit.

[0095] FIG. **68** shows spring component **621** for the inlet detergent valve unit **440**.

[0096] FIG. **69** shows a view in a horizontal plane containing line **700** of FIG. **67** looking up to **681**.

[0097] FIG. **70** shows a view in a horizontal plane containing the line **702** of FIG. **67** looking down to **682**.

[0098] FIG. **71** shows a view in a vertical plane of symmetry for members **682** and **632** of inlet valve unit **440**.

[0099] FIG. **72** shows a section outline view in a horizontal plane containing line **704** looking down to **682**.

[0100] FIG. **73** shows a view in a vertical plane of symmetry for the internal parts of the valve unit of **440**.

[0101] FIG. **74** shows a view in a vertical plane of the configuration of detergent reservoir unit **450**.

[0102] FIG. **75** shows a view in a vertical plane of symmetry of a choke point for enabling flow or disabling of detergent from the detergent reservoir.

[0103] FIG. **76** shows a view of a stopper for enabling or disabling flow of detergent through choke point **720**.

[0104] FIG. **77** shows a top view of the detergent reservoir unit **450**.

[0105] FIG. **78** shows a section in a vertical plane of stopper **726** inserted into choke point **720** in the closure mode.

[0106] FIG. **79** shows a section in a vertical plane of the stopper **726** inserted into choke point **720** in the open mode.

[0107] FIG. **80** shows a vertical section through the detergent unit and the detergent activation unit when assembled, and the invention is in the off mode for the position of the lever.

[0108] FIG. **81** shows a section in a horizontal plane through the detergent activation unit when assembled and the invention is in the off mode for the position of the lever with top view of the cam.

[0109] FIG. **82** shows a phase of configuration of the detergent activation unit in the closed mode for relating a relation between the input of detergent and the output of detergent.

[0110] FIG. **83** shows a vertical section through the detergent unit and the detergent activation unit when assembled and the invention is in the activation mode for the position of the lever.

[0111] FIG. **84** shows a section in a horizontal plane through the detergent activation unit when assembled and the invention is in the activation mode for the position of the lever with top view of the cam.

[0112] FIG. **85** shows a phase of configuration of the detergent activation unit in the activation mode for relating a relation between the input of detergent and the output of detergent.

[0113] FIG. **86** shows a vertical section through the detergent unit and the detergent activation unit when assembled, and the invention is in the activation mode for the maximum predetermined rotation of the lever.

[0114] FIG. **87** shows a section in a horizontal plane through the detergent activation unit when assembled and the invention is in the activation mode for the position of the lever with top view of the cam.

[0115] FIG. **87***a* shows a phase of configuration of the detergent activation unit in the activation mode for a relation between the input of detergent and the output of detergent and the closing of the detergent inlet valve and the closing of the detergent outlet valve.

[0116] FIG. **88** shows a vertical section in a plane symmetric to the detergent activation unit and the detergent reservoir in relation to the position of the cam unit, the cartridge unit and the lever unit in the inactive or closed mode of the invention.

[0117] FIG. **89** shows a configuration of the lever, the moveable disc **102** and the fixed disc for the closed mode for FIG. **88**

[0118] FIG. **90** shows a vertical section in a plane symmetric to the detergent activation unit and the detergent reservoir in relation to the position of the cam unit, the cartridge unit and the lever unit in the active or open mode of the invention.

[0119] FIG. **91** shows a configuration of the lever, the moveable disc **102** and the fixed disc in the open mode for FIG. **90**.

[0120] FIG. **92** shows a configuration for mounting and stabilizing the cartridge unit for use with a wash basin.

[0121] FIG. **93***a* shows a configuration for interfacing with the cartridge unit and enabling water from an inlet to the cartridge valve.

[0122] FIG. **93***b* shows a configuration for directing water from an inlet to the interior passage of **93***a*.

[0123] FIG. **93***c* shows a section through **963** of FIG. **93***b*.

[0124] FIG. **93***d* shows a configuration for directing water from outlet cartridge mounting and stabilizing unit **920** to conduit and to the spout relating to

[0125] FIG. **93***e* shows a section of the assembly of the cartridge, bonnet nut, and inlet interfacing member **981** to the cartridge mounting and stabilizing member **920** of FIG. **92**.

[0126] FIG. **94** shows a section of the assembly of the cartridge, bonnet nut, inlet interfacing member **981**, cartridge mounting and stabilizing member **920** and member **965**.

[0127] FIG. **95** shows a configuration of the mounting block for the invention in relation to a wash basin.

[0128] FIG. **96** shows a configuration of an under-cover plate for the invention when mounted in relation to a wash basin.

[0129] FIG. **97** shows a configuration of an escutcheon for the invention when mounted with a wash basin.

[0130] FIG. **97***a* shows a configuration of the spout assembly.

[0131] FIG. **98** shows the first step for mounting and securely attaching the invention to its mounting base with rubber washers and nuts. The detergent activation unit is also mounted to the mounting base.

[0132] FIG. **98***a* shows a front view of the first step for mounting and securely attaching the invention to its mounting base with rubber washers and nuts.

[0133] FIG. **99** shows the next phase in assembling the invention with the cartridge unit, then the turning stop restrictor, then the bonnet nut and then the cam unit.

[0134] FIG. **99***a* the escutcheon **940** is next assembled.

[0135] FIG. **99***b* shows the assembly of the spout unit, the pop-up unit and lever unit.

[0136] FIG. **100** shows an assembly of the invention without the detergent reservoir unit.

[0137] FIG. **101** shows a configuration of the assembly of the invention when mounted with a wash basin and the detergent reservoir unit.

[0138] FIG. **102** shows and exploded view of the configuration of the assembly of the invention.

[0139] FIG. **103***a* shows an image of the configuration for interfacing with the cartridge unit and enabling water from an inlet to the cartridge valve.

[0140] FIG. **103***b* shows an alternative configuration for input to the cartridge unit and output from the cartridge unit and **981'** interface to the cartridge unit.

[0141] FIG. **103***e* shows a section of an alternative configuration **920'** for the mounting of the cartridge, bonnet nut, and inlet interfacing member **981'**.

[0142] FIG. **104** shows a section of the assembly of the cartridge, bonnet nut, inlet interfacing member **981'**, cartridge mounting and stabilizing member **920'** and member **963'**.

[0143] FIG. **105** shows an alternative configurative **104'** for the stem unit of the invention.

[0144] FIG. **106** shows an alternative configuration **89'** for the stop interception.

[0145] FIG. **107** shows the cartridge unit assembled with alternative stop **89** and alternative stem **104'**.

[0146] FIG. **108** shows an alternative configuration for the lever handle unit for a rectangular cross-section inlet for the cartridge stem.

[0147] FIG. **109** shows a section of the bonnet nut with a circular cross-section for stabilizing the alternative cartridge system.

[0148] FIG. **110** shows a view of the bonnet nut with a circular for stabilizing the alternative cartridge system.

[0149] FIG. **111** shows a view of the cam unit **810** with a rectangular cross-section for assembly with the stem alternative **104**.'

[0150] FIG. **112** shows an alternative configuration for the cartridge unit assembled with stop **89** and cam alternative **810**.

DETAILED DESCRIPTION

[0151] Referring to FIG. **1**, what is shown is configuration of an embodiment of the invention as seen in a faucet mount in relation to a wash basin.

[0152] Referring to FIG. **2** what is shown a geometric positioning relation of the base **12** of a faucet spout **10**, and distance **14**, labeled a of said base **12** of said faucet spout **10** from said base **12** of spout **10** to a base **16** of a lever handle **20** of said faucet where said lever handle **20** is enabled with means for rotational motion when said lever handle **20** is attached to cartridge assembly **420**. Said lever handle **20** rotation being enabled by connection to the upper portion of a spindle of a faucet cartridge valve. Said lever **20** is preferably configured with an upper flat surface region **201** and a lower curved surface region **202** to better to facilitate disbursement of liquid on said upper flat surface region **201** and adhesion of liquid to said lower curved surface region **202** thus substantially facilitating washing of total surface area of said lever **20** when said lever **20** is disposed to intercept line of flow **777** from spout portion **8**. The members detergent reservoir **450** and spout escutcheon **977** are not shown in FIG. **2**. Said lever **20** is preferably made from brass or stainless steel.

[0153] Referring to FIG. **3**, what is shown is a view from the right of FIG. **2**. Line **777** shows a direction of vertical flow of fluid from a faucet spout portion **8** of said spout **10** on said faucet mount. The horizontal distance **24**, labeled b, between line **444** and line **777** and in the plane containing line **444** and line **777** is such that the vertical line **555** projects between line **444** and line **777** and in the plane containing line **444** and line **777** and where line **555** is the vertical line of axis **555** of said cartridge unit **420**.

[0154] Referring to FIG. **4** and FIG. **2** geometric length **26** labeled c of said handle lever **20** can be related to the said geometric distance a and said geometric distance b by the inequality $\sqrt{a^2+b^2} \leq c$ When said relation $\sqrt{a^2+b^2} \leq c$ exists in said faucet said lever handle **20** can be enabled to intersect said line of fluid flow **777** from said spout portion **8** of spout **10** of said faucet; thus said lever portion **20** can be exposed to interact with said fluid flowing from said spout portion **8** of said spout **10**.

[0155] Referring to FIG. **5**, what is shown is a geometric configuration for a single lever faucet unit.

[0156] Referring to FIG. **6**, what is shown is an embodiment of a cartridge unit **420**. Referring to FIG. **7** what is shown are the exploded components of said cartridge unit **420**. As shown in FIG. **6** cartridge **420**, includes a body **90**, said body **90** has an exterior surface **64** and an interior passage **68**. FIG. **8** shows a configuration of said body **90** while FIG. **8***a* shows the configuration of a cross-section of said body **90**. As shown in FIG. **8** exterior surface is preferably generally cylindrical in shape so as to be easily situated in a flow conduit for fluid and thus enable the action of an inline valve between the conduit and the outlet of a faucet. The body may be formed of a variety of materials such as metal, metal alloys or other utility compatible economical nonmetallic composite or thermoplastic.

[0157] The interior passage **68** of the body **90** defines a longitudinally extending passage **68** through the body as shown in FIG. **8***a*. Passage **68** preferably extends from an inlet opening **70**, at the bottom of the body to a lateral outlet opening **82** at the top of the body. The passage **68**, preferably has a cylindrical configuration conducive to use of rotating

parts therein and can also have one or more sections or ones to accommodate the size and shape of various parts therein. As shown the passage has an upper portion **76** which is preferably of a narrower cross-sectional diameter as shown in FIG. **8***a* to correspond to the dimensions of the region **57** of said stem **104**, and a lower wider cross-sectional diameter section **78** that is preferably wider to accommodate other parts of the valve such as a disk, sealing rings and rotatable base portion of said stem **104**.

[0158] The body further includes at least one side opening **82** extending transversely through the body from the interior passage **68** to the exterior surface of the body **90**. The side opening **82** is preferably located to be in keeping with current faucet design in that water or other fluid flowing upwards through the inlet end **70** of the body into passage **68** would encounter the stationary disk and pass through the opening therein when in the open valve mode until it entered the receiving area of the moveable disk and could then flow out the side opening **82** in the body to continue on to feed the faucet body and outlet of the faucet.

[0159] Thus, one or more side opening **82** for this embodiment should preferably be positioned to accommodate that flow out said side openings **82** in an unimpeded manner within the design. The opening is preferably rectangular for fluid flow characteristics but can have other configurations. As shown two such side openings **82** are shown which is compatible with the number of openings and receiving areas in the disk cartridge.

[0160] The openings **82** is preferably rectangular for fluid flow characteristics but can have other configurations. As shown two such side openings **82** are shown which is compatible with the number of openings and receiving areas in the disk cartridge.

[0161] FIG. **9** shows a configuration of body stop interceptor member **205** while FIG. **10** shows a cross-section of said member **205**.

[0162] Referring to FIG. **8**, said body **90** has an upper substantially flat surface **130** enabled with means for limiting the rotation of handle **20** and thus the rotation of stem **104**. Said means for limiting the rotation of stem **104** is enabled by raised feature **60** and raised feature **61** where said feature **60** and said feature **61** are designed to limit the turning of said stem **104** by said lever **20** to a maximum predetermined angle of rotation; such limiting is enabled when said stop **60** and said stop **61** are rigidly connected to said upper surface **130** of said cartridge body **90**. As will be shown said maximum predetermined angle of turn limits the range of motion of a moveable disc **102** against the openings of a fixed disc **112** and thus enables desired coordination of the various flow openings within a particular predetermined rotational range. The embodiment of such a moveable disc is shown in FIG. **15** while the embodiment of such a fixed disc is shown in FIG. **16**. Said stop feature **60** and said stop feature **61** are enabled on said upper surface **130** and arranged such that with the centre of a circle lying on the axis of rotation of stem portion **57**, said stop features location **60** and **61** may characterize end points on separate radii where said radii originate from a common point lying in the plane of surface **130** on the axis of rotation of stem portion **57**.

[0163] Referring to FIG. **10**, interior flange **47** of bonnet nut **205** shown in FIG. **9** contacts outer region of body surface portion **130**. Access region opening **45** of said bonnet nut **205** mates with and surrounds region **59** of stem **104**; however, said access opening **45** of said bonnet nut **205** is enabled to rotate substantially freely around region **59** of stem **104**. Said bonnet nut **205** fully accommodates passive stop **60**, passive stop **61** and said active stop **404** such that a measurable distance exists between the interior region of **205**, passive stop **60**, passive stop **61** and active stop **404** thus enabling stability of stem **104** when said active stop **404** is mated to region **56** of said stem **104**. Member **65** of active stop **404** interact with static stop **60** and static stop **61** to substantially enable the maximum predetermined angle of rotation of stem **104**. The bonnet nut **205** functions to ensure stability of the stem **104** and by extension, the stable function of the cartridge unit **604**.

[0164] Referring to FIG. **14**, what is shown is cartridge unit member **104** generally called the stem of a ceramic faucet unit. Said stem **104** includes a reduced cylindrical diameter region **57** of said stem member **104**. The upper region **58** of said region **57** is contiguous with a lower region **52** of said region **57**. Said region **58** is configured to be in rotatable relationship with lever handle unit **304** of FIG. **12** while said region **52** will be shown to be configured to be in rotatable relation with faucet system member shown in FIG. **39**.

[0165] Contiguous to region **52** is region **59** of said region **57**. Said region **59** is configured to be substantially frictionless and configured to move substantially frictionless against the interior **45** of component member **205** shown in FIG. **10**.

[0166] Contiguous to region **59** of said region **57** is region **56** of said region **57**. Said region **56** of FIG. **14** is configured to be in rotatable relation with interior **34** of **404** depicted in FIG. **13**.

[0167] Referring to FIG. **13**, faucet unit member **404** when assembled with region **56** of upper stem portion **57** functions to interact with body stops **60** and **61**. Said member **65** of member **404** will be shown to interact with body stop **61** and body stop **60** and also will be shown to enable a predetermined angular rotation of region **57** and consequently, ensure rotation of a moveable disc **102** by said stem **104**.

[0168] Referring to FIG. **12** portion **58** of stem **104** is enables rotation of said stem **104** when said stem **104** is in locking relationship with lever unit **304**; such locking means between exterior region **58** of region **57** of **104** and interior **34** of lever unit **304** may be enabled by a grooved locking between region **58** of portion **57** and the interior wall of circular slots **34** of said **304**. The interior wall **34** of cam member **410** is also grooved for locking means with region **52** of region **57** of said stem **104** while the interior **34** of **404** is grooved for locking means with region **55** of region **57** of said stem **104**. Region **59** of region **57** is substantially smooth and enables rotation of the interior surface **45** of **205** to substantially frictionless motion on the said surface **59** of region **57**. FIG. **9** shows a configuration of member **205** while FIG. **10** shows a cross-section of said member **205**. It will be shown that such locking may be enabled by rectangular slots.

[0169] As shown in FIG. **14** region **57** is part of the stem **104** of said cartridge unit **604**. Said region **57** has an upper portion **58** configured to fit in rotatable relationship with the interior surface **34** of lever assembly **304** shown in FIG. **12**, and with the lower portion **66**, configured to be accommodated within the body **90** when said stem **104** is situated within the passage **68** of said body **90**.

[0170] As shown in FIG. **14** region **57** is part of the stem **104** of said cartridge unit **604**. Said region **57** has an upper

portion **52** contiguous to upper region **58** configured to fit in rotatable relationship with the interior surface **34** of cam assembly **410** shown in FIG. **39**, and with the lower portion **66**, configured to be accommodated within of the body **90** when said stem **104** situated within the passage **68** of the body **90**.

[0171] As shown in FIG. **14** the stem **104** of said cartridge unit **604** has a region **59** configured to rotate independently and substantially frictionless within member **45** of bonnet nut **205** shown in FIG. **9** and FIG. **10** and with the lower portion **66**, configured to be accommodated within the interior of the body **90** when said stem **104** is situated within the passage **68** of said body **90**. Said region **59** is contiguous to member region **52**.

[0172] Said region **57** of stem **104** has portion **56** configured to fit in rotatable relationship with the interior surface **34** of stop assembly **404** shown in FIG. **13**, and with the lower portion **66**, configured to be accommodated within the interior of the body **90** when said stem **104** is situated within the passage **68** of the body **90**. Said region **56** is contiguous with region **59**.

[0173] Referring to FIG. **14** the stem **104** of cartridge **604** has a lower portion **66** which is configured to fit in rotatable relationship with the interior passage **68** of the body **90** when said stem **104** situated within the said passage **68** of said body **90**. As shown in FIG. **14** the upper portion **55** of said stem **104** is enabled with groove **85** for receiving at least one sealing ring **72**. Referring to FIG. **14**, when said stem **104** is integrated within passage **68** of the body **90** said sealing ring **72** functions to prevent leakage around the stem in said region **55**. As shown in FIG. **14** lower portion **66** of said stem **104** is enabled with a groove **87** at least one sealing ring **74**. Referring to FIG. **14** when said stem **104** is integrated within passage **68** of the of said body **90** said sealing ring **74** functions to prevent leakage between the interior surface of the said body **90** and the lower end portion **66** of said stem **104**. Said sealing ring **74** sits in inclusion **87** of said stem **104**.

[0174] The upper end region **57** of the stem **104** may preferably have a threaded or other snap-fit, slide in, friction fit or gripping surface for attaching the cartridge to a faucet handle so as to be rotatable and function with the handle **20**. The lower end portion **66** of the stem **104** has a bottom surface **96** to which is attached a feature **98**. The upper end portion **58** of the said region **57** as shown in FIG. **6** is configured to be fitted within a faucet handle assembly **304** shown in FIG. **12**. The stem **104** may be formed of a one-piece construction from stainless steel, brass or zinc alloy or copper alloy or other safe metal plastic.

[0175] The bottom surface **96** of said stem **104** preferably has rectangular prismatic feature **98**, extending from said surface **96**. Said rectangular prismatic feature **98** when within tolerance is accommodated within rectangular prismatic slot **100** of moveable disc **102** will be shown to allow for interaction with said moveable disc **102** so that when said portion **58** of region **57** of said stem **104** is fitted within a faucet handle assembly **304** and lever **20** is turned a predetermined angle, it will then in turn rotate the said moveable disc **102** substantially that of said predetermined angle of said lever assembly **304** and consequently activate the open/closure feature of the cartridge valve. FIG. **12** shows a configuration of a faucet handle assembly **304**. FIG. **15** shows a configuration of a moveable disc.

[0176] Referring to FIG. **14**, a region defined by **59** of region **57** moves freely substantially frictionless within reduced diameter region **45** of bonnet nut **205**. Said bonnet nut functions to substantially ensure stability of the cartridge unit.

[0177] Referring to FIG. **15** what is shown is a configuration of the moveable disc **102**. Said moveable disc **102** is enabled with an inclusion **110**, said inclusion **110** is contained by parabolic arc **91**, and mirrored parabolic arc **94**, parabolic arc **92** and mirrored parabolic arc **95**, line segment **96** and mirrored line segment **97**. Said inclusion is further defined by line segments **95** and line segment **99**. Said inclusion **110** is mirrored on an opposite surface of said moveable disc **102**. Said moveable disc **102** is further enabled with a preferably prismatic inclusion **100** where said inclusion **100** functions to tolerably accept extended tab **98** of the stem **57** thus enabling turning of moveable disc **102** against fixed disc **112** when said unit **57** is activated to rotate by activation of lever **20** for its utility and disc **102** enables fluid through **114** of fixed disc **112** into harbor **110** of said moveable disc **102**.

[0178] Additionally, the upper surface of said moveable disc **102** is disposed to be described as a section of a cross-section of a cylinder defined by two parallel chords shaped to fit within a generally cylindrical portion of the passage **68** in the lower portion **78** of said passage **68**. Said diametric inclusions **110** in the lower portion of moveable disc **102** function as fluid receiving harbors is the said moveable disc **102**.

[0179] The movable disk **102** included within the body in passage **68** is enabled with means on its upper surface **104** configured to contact and interact with the bottom surface **96** of the lower end portion of the stem **66** in a rotatable relation. As shown, upper surface **104** is preferably configured with a slot **100** for receiving a tab **98** therein. The disk upper surface may preferably be defined as a portion of the cross-section of a solid cylinder defined by symmetrically parallel chords shaped to fit within a preferred generally cylindrical portion of the passage **68** in the lower portion **78** in the passage **68**. There are preferably two side wall portions defining preferably two fluid receiving areas **110** within the moveable disk **102**. The receiving area **100** is configured so that when the disk **102** is rotated to align the receiving area **100** with the side opening **82** in the body **68** it will allow fluid flow out of the side opening of the body for feeding the faucet to which is installed with fluid entering the cartridge from a conduit through the open inlet **70** of the cartridge.

[0180] Referring to FIG. **16** what is shown is a stationary disk **112**. Said disc **112** is fixed in position for interacting with moveable disc **102**. Said fixed disc **112** is preferably provided with openings **114** extending through the stationary disk **112** for enabling passage of fluid flow from an inlet end **70** of the body **90** then into the passage **68**, and through the stationary disk and then into the receiving area **110** of the moveable disk, and then out the side opening **82** of the body when the cartridge is in the open position mode. The stationary disk **112** is preferably enabled with lubricant containing pits **115**; said lubricant in lubricant containing pits function to reduce friction between moveable disc **102** and stationary disc **112** thus further prolonging functional integrity of said moveable disc **102** and said stationary disc **112**. Said fixed disc is further provided with diametric tabs

118; said tabs **118** enables the said disc **112** to be fixed in recesses in the interior passage **68** of the body cartridge **90**.

[0181] Referring to FIG. **17** what is shown is another view of the stationary disc **112**. Referring to FIG. **18**, what is shown is a configuration of said fixed disc **112** positioned with diametric tabs **118** recessed in said body **90** of the cartridge unit **420**. Referring to FIG. **19** what is shown is a view of the moveable disc **102**. Referring to FIG. **20** what is shown is a relationship between said moveable disc **102** and said stationary disc **112** when cartridge valve unit **604** is in closure mode thus substantially resisting the flow of liquid from conduit **70** through passage **68** and to side openings **82**. Referring to FIG. **21** what is shown is a relationship between said moveable disc **102** and said stationary disc **112** when said cartridge valve unit **420** is the open mode thus enabling the flow of liquid from conduit **70**, through the passage **68** and to side openings **82**. As will be shown said disabling and enabling of the flow of liquid through the valve cartridge unit is enabled when a lever handle **20**, when fitted to portion **58** of the region **57** of the stem **104** shown in FIG. **14** can be turned to reduce and shut off flow. The handle **20** thus initiates the closing of the valve from the open mode of said valves and the opening of the valves from a closure mode of said valves when said handle **20** is initiated to turn.

[0182] Referring to FIG. **22** what is shown is a view from the side opening **82** of said cartridge unit **420** when said cartridge unit **420** is in closure mode. FIG. **23** shows a diametric cross-section of the view of FIG. **22** and here said diametric cross-section lies in a plane of symmetry across the most substantial dimensions of preferably rectangular prismatic slot t100 of said movable disc **102**.

[0183] Referring to FIG. **24**, what is shown is a view of said cartridge **420** of FIG. **22** rotated through 90 degrees. FIG. **25** shows a diametric cross-section of the view of FIG. **24** where said diametric cross-section lies in a plane of symmetry across the lesser dimensions of preferably rectangular prismatic slot **100** of said movable disc **102**.

[0184] Referring to a cartridge configuration say FIG. **23** for clarity; for the washing of the lever **20** the turn of stem **104** when lever handle **20** is attached to said stem portion **58** of stem **104** enables opening and closing of valves **102** and **112** and thus enables utility of the invention. The washing of the lever **20** of the invention is enabled when said lever arm **20** is attached to stem region **58** of said stem **104** and said lever **20** is initiated to rotate through a maximum predetermined angle that is greater than the angle turned to the said line of flow **777** from spout **10**. The initial maximum predetermined turn of the stem **104** by lever **20** from an off mode of the cartridge **420** will be shown to reduce flow rate through spout **10** to enable spreading of detergent over ones hand and washing of hands; a subsequent counter turn through a predetermined angle enables said lever **20** to intercept line of flow **22** from spout **10** and also increases flow rate through spout **10** to its predesigned maximum thus enabling the washing said lever **20** and further washing of hands. A subsequent counter turn of said lever **20** through a predetermined angle enables repositioning of lever arm **20** back to its off position. The reduction in flow rate of solvent through spout **10** thus enables significant conservation in the use of water as a solvent while the washing of said lever **20** significantly enables reduction in the spread of pathogens thus enhancing health and safety.

[0185] Referring to FIG. **16** said stationary disk **112** is enabled with preferably diametric paired extension **118** for locking said stationary disc **112** within the interior passage **68** of the cartridge body **90**; thus, enabling reliability and stability of said cartridge unit **420**. As shown in FIG. **18**. said means for locking said stationary disc **112** may be achieved when inclusion is designed within the interior passage **68** of said body **90** and were said inclusions in the passage **68** of said body **90** are dimensioned to accommodate and fit said diametric extensions **118** of said stationary disc **112**. Said stationary disc **112** interfaces with the moveable disc **102** located in the passage **68** of the cartridge body **90** and with conduit **70** where preferably openings **114** in said stationary disc **112** accommodate flow to the receiving are **110** of moveable disc **102** and then through side openings **82** to the exterior of body **90** of cartridge unit **420**.

[0186] Referring to FIG. **25** said conduit **70** is external to said interior passage **68**, thus, to ensure reliability of the cartridge unit an elastomeric seal **88** is introduced to interface said stationary disc **112** and said conduit **70** in region **132** of the cartridge body **90**. Said sealing ring **88** included within component **132** functions to apply pressure between **132** stationary valve member **112**, and moveable valve member **102**. The pressure exerted by said sealing ring **88** ensures optimal functioning of the cartridge for flow of liquid. The stationary disc **112** is also enabled with a pit like feature **115**. Lubricant in said pit like feature **115** function to substantially be frictionless movement of said moveable disc **102** over the surface of fixed disc **112** thus also to prolong the functional integrity of the cartridge unit **420**.

[0187] Referring to FIG. **26**; what is shown is an explosion of the order of contiguous assembly of the position of tabs **118**, the orientation of the moveable disk **102** and the orientation stationary disk **112** and a cross-section through the lower part **132** of the said cartridge body **90** when the faucet system shown in FIG. **1** is in the off mode but disposed to enable flow of liquid to said faucet when activated. Referring to FIG. **27** in contrast to FIG. **26**, what is shown is an integration and relative contiguous orientation of said moveable disk **102** and said stationary disk **112** in the passage **68** of the lower part **132** of said body **90** when the faucet system of FIG. **1** is in the off mode but disposed to enable flow of liquid to said faucet when activated.

[0188] Referring to **28**; what is shown is an explosion of the order of contiguous assembly of the position of tabs **118**, the orientation of the moveable disk **102**, the orientation of stationary disk **112** and a cross-section through the lower part **132** of the said cartridge body **90** when the faucet system shown in FIG. **1** is in the activated mode but disposed to enable substantial flow of liquid through spout **10** when said lever **20** does not intercept the line of flow **777** from spout **10** to a wash basin. Referring to FIG. **29** in contrast to FIG. **28**, what is shown is an integration and relative contiguous orientation of said moveable disk **102** and said stationary disk **112** in the passage **68** of the lower part **132** of said body **90** when the faucet system of FIG. **1** is in the activated mode but disposed to enable substantial flow of liquid through spout **10**.

[0189] Referring to **30**, what is shown is an integration and relative contiguous orientation of said moveable disk **102** and said stationary disk **112** in the passage **68** of the lower part **132** of said body **90** when the faucet system of FIG. **1** is in the activated mode but disposed to reduce flow of liquid through spout **10** where said reduction in flow rate of liquid conserves water as a solvent when hands are being soaped.

[0190] Referring to FIG. **31**; what is shown is the order of contiguous assembly and relative orientation of the handle **20**, the orientation of the moveable disc **102** and the orientation of the stationary disk **112** when faucet system is in the off mode and liquid flow is disabled through spout **10** of faucet assembly for a right hand side positioned unit of the invention.

[0191] Referring to FIG. **32**, moveable disc **102** is shown with a line of symmetry **1020** for said moveable disc **102**; now referring to **1020** of FIG. **31** and consistent with the properties of a rigid body, said **1020** characterizes initial orientation of said line of axis of symmetry **1020** for **102** of FIG. **31** and transformation of said axis of symmetry **1020** in **102** in FIG. **32** subsequent to lever **20** executing its predetermined angle of rotation; thus indicating a sense and angle of rotation of moveable disc **102** from the inactive mode to the utility mode of configuration where said lever arm **20** is not disposed to intercept line of flow **22** from portion **8** of spout **10**.

[0192] Referring to FIG. **33** the predetermined maximum turn of moveable disc **102** is shown with a line of symmetry **1020** for said moveable disc **102**; now referring to **1020** of FIG. **32** and consistent with the properties of a rigid body, said **1020** characterizes initial orientation of said line of axis of symmetry **1020** for **102** of FIG. **32** and transformation of said axis of symmetry **1020** in **102** in FIG. **33** subsequent to lever **20** executing its predetermined maximum angle of rotation; thus when the cartridge system **604** exists in this mode the flow rate of solvent say water is significantly reduced for enabling soaping of hands and thus as mentioned enabling economic utilization of water and by extension economic, environmental and health conservation because the lever is now washed by hands that have been washed before the cartridge system is returned to its inactive mode by the turning of said lever **20** and thus also mitigating the spread of pathogens. The washing of lever **20** is enabled when said lever **20** is counter turned to intercept the line of flow **22** of liquid from spout **10** thus said lever **20** is disabled from the line of flow of solvent from spout **10** when hands are being washed.

[0193] Referring to FIG. **34**, FIG. **35** and FIG. **36** what is shown is a configuration of FIG. **31** FIG. **32** and FIG. **33** for an embodiment of the invention in which the said cartridge valve **420** is configured for activation by turning a lever counterclockwise for said systems activation. Such a system is a configuration in which the cartridge unit is left side of the base of a faucet basin and more suited for a left-handed person.

[0194] Referring to FIG. **37**, what is shown is an embodiment of a right-hand side cartridge valve **420** in the inactive mode were said member **65** attached to said stem **104** would abut stop member **60** to effect closing of openings **114** of stationary disc **112**.

[0195] Referring to FIG. **38** what is shown is an embodiment of a right hand side cartridge valve **420** in the active mode and where rotation of the stem **104** through a maximum predetermined angle from the off configuration of the cartridge **420** would have been limited by stop member **61** when said member **65** of said stem **104** intercepts said stop member **61**.

[0196] Referring to FIG. **39**, what is shown is an embodiment of a cam attachment component unit **410**. FIG. **40** shows an embodiment of the cartridge unit **420**; cam attachment **410** and bonnet nut **205** not shown in FIG. **40**. FIG. **41** shows a section in a vertical plane substantially symmetric through an embodiment of a cylindrically disposed detergent activation unit **430**. FIG. **42** shows a section in a vertical plane substantially symmetric to an embodiment of a cylindrically disposed valve component unit **440**. FIG. **43** shows a section in a vertical plane substantially symmetric to an embodiment of a cylindrically disposed detergent reservoir unit **450**. FIG. **44** shows an integration of components units **410**, **420**, **430**, **440** and **450**.

[0197] Referring to FIG. **45**, cam component member **410** shows a cam region while **460** with an inner grooved attachment region **34** of stem attachment region **462** of said cam component unit **410**. Said inner grooved attachment **34** locks to region **52** of upper stem portion **57** of stem unit **104** in a complete assembled unit of the invention such that rotation of stem **104** substantially simultaneously rotates said cam component unit **410**. Said cam unit component **410** is preferably made from non-corrosive metal such as copper, brass or hard plastic in order to ensure maximum and prolonged functional reliability; portion **462** of cam unit component **410** is shaped like an open cylinder such that said cam unit component region **462** inner region **34** is disposed to be modified to enable mating with region **52** of the upper portions **57** of stem **104**. Referring to FIG. **45** region **460** of cam unit component **410** is disposed to have an arc outer cross-section **438** contiguous with a greater sloping side **439** and a lesser sloping side **436** of a truncated obolid. Said open circular annulus section **462** is grooved on its interior for mating attachment to said region **52** of upper region **57** of stem **104** for said cartridge unit **420**. Alternatively, said lever **20** and said cam unit **410** are disposed to be a component unit **4500** with an open but common inner grooved open cylindrical region and where said cam region **462** and said lever handle **20** are angularly positioned on said open but common cylindrical region **462** as shown in FIG. **45***a*.

[0198] Referring to FIG. **45**, said cam component **460** is enabled with a channel guide **437** that functions as a guide to a mini roller bearing **495** attached to a cam follower component **496**.

[0199] Referring to FIG. **46**, what is shown is an integration of said cam attachment component unit **410** to portion **52** of upper portion **57** for said stem unit **104** of said cartridge unit **420**. Said cam component unit **410**, said lever **20** and said upper portion **57** constitute a rigid body thus rotation of the stem **104** results in rotational movement of cam **460** and said stem **104** as a unit. Consequently, said cam component unit **410** and said lever **20** and said upper portion **57** will move as a rigid body, thus consistent with the properties of a rigid body said cam **460** will rotate consistent with the sense of clockwise or counter clockwise rotation of said lever **20**. Additionally, said cam **460** rotation occurs with substantially relative invariance in angular configuration relative to said lever **20** thus enabling substantial invariance in a predetermined said angular separation of said cam component **460** and said lever **20** when said cam **460** and said lever **20** are attached to said stem **104**. Said cam **460** is thus substantially constrained to move in a horizontal plane. Said cam **460** and said lever **20** are disposed to be separately mated to said upper stem portion **57** by groove fit thus enabling ease of manipulation for adjustment or replacement of the cam unit **410**; furthermore a relationship between the cam and follower is enabled within the circular area generated by the lift of the cam **460** consequently enabling convenient positioning of a detergent activation

unit for activation by said cam and follower; said detergent activation unit would also be in a relation to a wash basin. FIG. **46** functions to show the positioning of the cam unit **410** relative to the lever assembly **304**; in an assembly of the invention the positioning of the bonnet nut **205** would precede the positioning of the cam unit **410** to be followed by the positioning of the lever unit **305**.

[0200] Referring to FIG. **47**, what is shown is an integration of cam unit component **410** and lever **20** to said upper portion **57** of stem unit **104**; thus as stated said integration of cam unit **410** and lever **20** to said upper portion **57** substantially constitutes a rigid body, consequently initiation of rotation of lever **20** initiates rotation of stem **104** and thus rotation of cam unit **410**. FIG. **47** functions to also show the positioning of the cam unit **410** relative to the lever assembly **304**; in an assembly of the invention the positioning of the bonnet nut **205** would precede the positioning of the cam unit **410** to be followed by the positioning of the lever unit **305**.

[0201] Referring to FIG. **48**, what is shown **430** shown is a planar cross-section in a plane of symmetry for an embodiment of a detergent activation unit **430**. Said section shown in FIG. **48** is symmetric to contiguous diametric flanges **465** and thus said flanges are not shown. Said detergent activation unit **430** comprises an outer stabilizing component unit **498** shown in FIG. **49**, an inner valve component unit **484** shown in FIG. **56** and an inner piston component unit **449** shown in FIG. **60**. FIG. **48***a* shows an embodiment of a planar cross-section in a plane at right angle to said section of detergent activation unit **430** shown in FIG. **48**. As will be shown access openings **497** shown in FIG. **48***a* serve as a conduit for screws for securing said detergent activation unit **430**.

[0202] Referring to FIG. **49**, said stabilizing containment component **498** depicted in FIG. **49** may be described as a cylindrically disposed entity contiguous with diametrically rectangular prismatic flanges **465** as shown in

[0203] FIG. **55**. Said rectangular prismatic flanges **465** function to anchor said detergent activation unit **430** on a mounting base for a faucet. As shown in FIG. **55** said cylindrical disposed section of **498** is enabled with spirally grooved access opening **487** for attaching a detergent reservoir **450**.

[0204] Referring to FIG. **49** components **480**,**481** **489** and **490** show access for sealing rings. It will be shown that said sealing rings in access **480**, **481**, **489** and **490** function to restrict the leaking of detergent from detergent reservoir region **450** when said reservoir **450** is assembled in access slot **487**.

[0205] Referring to FIG. **49** said outer containment component **498** has end region **445** externally grooved to be compatible with end cap **494** were said end cap **494** is internally spirally grooved such that said end cap **494** is disposed to enclose externally spirally grooved region **445**. It will be shown that said end cap **494** is enabled with an appropriately shaped access slot **499** were said access slot **499** functions to enable means for access of cam follower **496** of piston unit shown in FIG. **60**. Said end cap region **494** thus enables removal and reattachment from said externally grooved region **445** when the need arises for insertion removal or assemble of the piston unit component **449** shown in FIG. **60**. FIG. **49***a* shows a view looking into the spirally grooved interior of said end cap **494** while FIG. **49***b* shows an exterior view for said end cap **494**. Said detergent activation unit components may preferably be configured from Bakelite, melamine or nylon or other compatible material.

[0206] Referring to FIG. **49**, said component **498** has its internal region modified for insertion, translation, stability and optimal function of the piston unit component **449**. Referring to FIG. **54** what is shown is a conceptual cross-section of through a vertical plane of said **445** through line **540** of FIG. **49** where said cross-section depicted in FIG. **54** lies in a plane containing line **540** and where said plane is perpendicular to the height of said cylindrically disposed **498**. Referring to FIG. **53** what is shown is a conceptual cross-section of said **498** through line **530** of FIG. **49** where said cross-section depicted in FIG. **53** lies in a plane containing line **530** and where said plane is perpendicular to the height of said cylinder disposed **498**. Referring to FIG. **52** what is shown is a conceptual cross-section of said **498** through line **520** of FIG. **49** where said cross-section depicted in FIG. **52** lies in a plane containing line **520** and where said plane is perpendicular to the height of said cylindrically disposed **498**. Referring to FIG. **51** what is shown is a conceptual cross-section of said **498** through line **510** of FIG. **49** where said cross-section depicted in FIG. **51** lies in a plane containing line **510** and where said plane is perpendicular to the height of said cylindrically disposed **498**. Referring to FIG. **50** what is shown is a conceptual cross-section of said **498** through line **560** of FIG. **49** where said cross-section depicted in FIG. **50** lies in a plane containing line **560** and where said plane is perpendicular to the height of said cylindrically disposed **498**.

[0207] Referring to FIG. **49** in combination with FIG. **53**, diametrically paired slots **492** function to substantially resist rotation of piston unit **449** when diametrically paired flanges **493** are enabled on said piston unit **449** shown in FIG. **60**. Said rectangular recessed slots **492** do not extend to region of said cylinder **464** were said slots **492** would impinge the function of o-rings **489** and **490**.

[0208] Referring to FIG. **49**, sealing rings **489** and **490** are enabled with access within the region defined by line **530** and line **520** of the interior of wall of said cylindrical component **498**. Said piston component **449** is excluded from translation to regions of **498** defined between lines **530** and **520** as depicted in FIG. **49** thus enabling o-ring **489** and o-ring **490** to substantially resists entry of detergent fluid to said region **445** of said cylindrically disposed **498** depicted in FIG. **49**.

[0209] Referring to FIG. **49**, said cylindrical component **498** is enabled with a detergent containment region **487** where liquid detergent is enabled to enter said detergent region **487** and when detergent liquid in said detergent region **487** is initiated to be substantially dispelled. Region **487** is enabled with a circular flange **477** enabled on the interior wall of said cylinder **498**. It will be shown that said flange **477** functions to contain a valve **482**.

[0210] Referring to FIG. **51**, what is shown is a conceptual cross-section of said **498** through line **510** where said cross-section depicted in FIG. **51** lies in a plane containing line **510** and where said plane is perpendicular to the height of said cylinder **498**. Said cross-section is enabled with detergent outlet attachment extension **478** to said cylinder component **498** such that said outlet attachment extension **478** is sandwiched by sealing ring **480** and sealing ring **481**. Said outlet attachment **478** is preferably connected to said

cylinder **498** by spiral connection thus said outlet attachment **478** is enabled with detachment and attachment characteristics.

[0211] Referring to FIG. **49** and end cap component **475** of FIG. **57**, said cylindrically disposed component **498** has end region **444** internally grooved to be compatible with closed end cap **475**. Said end cap **475** is externally spirally grooved such that said end cap **475** is disposed to be enclosed by an internally spirally grooved region **444** of said **498**. Said end cap **475** is preferably enabled with an inclusion for enabling removal and re-installation of said end cap **475** from said region **444** of said cylinder **498** by say a screwdriver.

[0212] Referring to FIG. **55**, what is conceptually shown is a view of the detergent activation encasement unit **498**. Said encasement unit **498** may preferably be configured from Bakelite, melamine or nylon or other appropriately compatible hard thermosetting nonmetallic or metallic material.

[0213] Referring to FIG. **56**, what is shown is an embodiment of the detergent outlet valve unit **484**. FIG. **57**, FIG. **58** and FIG. **59** show embodiment of the individual component of said detergent outlet unit **484**. FIG. **57** shows component **475** of said detergent outlet unit **484**; FIG. **58** shows a spring component **483** of said detergent outlet unit **484** and FIG. **59** shows component **470** of said detergent outlet unit **484**. Referring to FIG. **57**, component **475** has a preferably solid cylindrical portion **471** contiguous with a cylindrically disposed annulus region **474** were said annulus **474** is spirally on its outer surface for spiral insertion in region **444** of said cylinder **464**. Said outer spirally grooved cylindrically disposed component **474** is of a lesser radius than cylindrical component **471**. Again referring to FIG. **57** said cylindrical region **471** of **475** is contiguous with a cylindrically disposed but preferably solid region **473** portion. Said portion **473** is preferably externally grooved for accepting spring **58**. Said preferably solid region **473** is of a lesser radius than cylindrically disposed **474**. Referring to FIG. **59**, component **470** shows a cylindrical component **482** where said cylindrical component **482** is preferably concentrically contiguous with cylindrically shaped lesser radius component **485**; said component **482** is excluded from translation to region of **498** defined between lines **510** and **560** as depicted in FIG. **49** thus enabling o-ring **481** to substantially resists entry of detergent fluid to said region defined between said line **510** and said line **560** of FIG. **49**.

[0214] Said outlet valve **484** components may preferably be configured from Bakelite, melamine or nylon while the spring unit **483** is preferably made from stainless steel for resistance to the humid environment of a faucet.

[0215] Said component **485** depicted in FIG. **59** is further enabled with one or more spiral grooves **476** were said groove **476** function to stabilize spring component **483** when said spring **483** enshrouds said **485**. When said **475**, **483** and **470** are integrated in a functioning unit of the invention said spring unit straddles **473** and **485**, however the sum total of the heights of said cylinder **473** and said cylinder **485** is less than that of the relaxed length of spring **483** thus enabling a compressive length of said spring **483** where, as will be shown the length of said compressive length of said spring **483** is greater that the translation of said piston unit **449** when said piston unit **449** is initiated to translate by a cam **460**; under such restrictions components **473** and **485** thus function to enable stability of the spring **483** for the opening and closing of outlet **478** while disabling contact between said components **473** and **470**.

[0216] Referring to FIG. **60**, what is shown is an embodiment of the piston component unit **449**. Said piston component **449** is disposed to be described as cylindrically varying disposed. Said piston component **449** is enabled with a larger diameter region **491** were said region **491** is predisposed to move substantially frictionless against the interior wall of said cylindrically disposed component **498**. FIG. **63** shows a cross-section of said **491** through line **502** were said line **502** lies in a plane perpendicular to the axis of cylindrical disposed component section **491**. As will be shown said component **491** is further enabled with a beveled upper component **488** were said beveled upper component **488** will be shown to function as a wedge for initiating motion of a valve member **632**. Said piston component may be configured from Bakelite, melamine or nylon.

[0217] Contiguous with said piston component **491** within the interior of **498** is component **486** with a lesser radius than that of the radius of region **491**. As will be shown said component **486** is of a lesser radius in comparison to the radius of said **491**. It will be shown that said reduced radius of **486** in comparison to the radius of member **491** functions as a leading edge of the piston unit **449** for initiating contact with **482** of outlet valve unit **484** to enable dispensing of detergent through outlet **478** and for replenishing region **487** of **498** with detergent fluid in said region **487**. Said component **486** is preferably concentrically contiguously enabled on said **491** and in region **487** of said cylindrically disposed **498**. Contiguous with said component **491** and in region **445** of cylindrical disposed **498** is component **496**. Said component **496** is of a lesser radius in comparison to the radius of **491** and will be shown function as a cam follower to said cam **460**. Said component **496** is preferably concentrically contiguously enabled on said **491** and in region **445** of said cylindrically disposed **498**. Enabled contiguously on **496** is a flange **493**. Said flange **493** is enabled to be within the limits of access slots **492**. Said flange **493** is disposed to be vertically oriented enabled on initiation to translate within said access slots **492** of region **445** of said cylinder **498**. As will be shown said flange **493** functions to stabilize said piston component unit **449** and ensures said **491** stays within the function of sealing rings **489** and **490**. End portion **495** of **496** is predetermined to interact with cam **460** when initiated. Said **495** region of **496** is preferably vertically enabled with a roller bearing to ensure longevity of the piston unit component in an assembly and mounted unit of the invention.

[0218] Referring to FIG. **61** what is shown is a cross-section in a vertical plane at right angles to the cylindrical height of **485** through line **500** of FIG. **5** the assemble of spring **483** and a cross-section of **485**. Referring to FIG. **62**, what is shown is a view of piston component **449** of FIG. **60** from the left. Referring to FIG. **63** what is shown is a cross-section projection of **491** in a vertical plane at right angles to the height of cylinder **491** through line **502**. Referring to FIG. **64**, what is shown is a cross-section in a vertical plane at right angles to the deposition of the cylindrical height of **496** through **493** and containing the line **504**.

[0219] Referring to FIG. **65**, what is shown is an embodiment of a vertical semicircular disposed cross-section of an inlet valve unit **440**. Said inlet valve **440** functions to enable flow of detergent to reservoir region **487** of detergent activation unit **430**. The components of said valve compo-

nent unit **440** are labeled **680** shown in FIG. **66**, **681** shown in FIGS. **67** and **682** and **621** shown in FIG. **68**.

[0220] Said inlet valve **440** components may preferably be configured from Bakelite, melamine or nylon while the spring unit **621** is preferably made from stainless steel for resistance to the humid environment of a faucet.

[0221] Referring to FIG. **66**, component **680** shows a cylindrically disposed containment **624**. Said containment **624** has a region **626** internally spirally grooved for receiving external spirally grooved component **623**. Also enabled in the interior of said **624** at the region distal to region **626** is a shoulder **629**. As shown in FIG. **65** said valve component **682** shown in FIG. **67** is enabled to freely rest on said shoulder **629** of the interior of said **624**. Said containment **624** is externally spirally grooved for insertion connection in the conduit component **724** of an internally grooved detergent conduit depicted in FIG. **74**. Said region of **624** distal to region **626** flares conically to reservoir region **487** of said cylinder **498**.

[0222] Referring to component **681** shown in FIG. **67** is an annulus shaped component **623** were said component **623** is spirally grooved on its outer curved surface. Said component **623** is concentrically enabled with a circular access opening **622** were said access opening **622** functions as a conduit for detergent fluid. Contiguous and concentric to component **623** is component **625** were said component **625** is an annulus shaped. The radius of said component **625** is less than the radius of component **623** but greater than the radius of component access conduit opening **622**. Said component **625** functions as a guide for spring component **621**.

[0223] Referring to component **682** depicted in FIG. **67** said component **682** is disposed to be a composite shape characterized as a solid truncated cone **634** contiguous with a preferably solid cylindrical section **627** where the larger base radius of said solid truncated cone **634** is common to the radius of said cylinder **627**. Said preferably solid cylinder **627** is concentrically contiguous with a circular face of an alternate cylinder **631** were said cylinder **631** is enabled with a larger radius than that of said cylinder **627**. Said cylindrical component **631** is further enabled with conduit channels **628** extending from a circular face of said cylinder **631** to the alternate face of said cylinder **631**. Said channels **628** enable the flow of detergent to said region **487** of detergent activation unit **430**. Said cylinder **631** alternate circular face is further enabled concentrically and contiguously with an alternate solid cylinder **638** were said alternate solid cylinder **638** is internally spirally grooved for insertion of externally spirally grooved extension **639** of component **632** depicted in FIG. **67**. Said externally grooved extension **639** is contiguous with said **632**. Said component **632** is disposed to be characterize as a cylinder enabled with a partial spherical component where said cylindrical section is internally spirally grooved.

[0224] FIG. **69** shows a relative upward looking view of **681** through a horizontal plane at right angles to the height of cylindrical annulus **625** where said plane contains the line **700** of FIG. **67**. FIG. **70** shows a depressive view of **682** through a horizontal plane containing line **702** and where that plane is parallel to a circular face of cylinder **631** shown in FIG. **67**. FIG. **72** shows a depressive view of **632** with its spirally grooved extension **639** through a plane containing line **704** of FIG. **71** and where that said plane is parallel to a circular face of cylinder **631**. FIG. **73** shows a section of the configuration of said component **681** and said component **682** enabled with spring member **621**. Extreme ends of said spring **621** enshrouds component **625** and component **627** such that spring **621** is enabled to be compressed when said cylinder **631** is initiated to translate by component **632** from said shoulder **629** of **624**. Said shoulder functions as a support base for component **631**.

[0225] Referring to FIG. **74**; what is shown is an embodiment of the detergent component containment unit **450**. Said detergent containment unit is enabled with a preferably cylindrical detergent reservoir **716** with means **726** for enabling flow or disabling flow of detergent from said detergent reservoir **716**. Component **712** of said detergent reservoir functions as a spirally grooved cap. Removal of said spirally grooved cap **712** enables refilling of said detergent containment reservoir. Said detergent containment reservoir is also enabled with an opening **714**. Said opening **714** functions to enable detergent fluid to enter region **487** of **464** when motion of said piston **491** enables a pressure difference between said region **487** and said detergent containment reservoir **716**. Said opening **714** enables pressure in said containment reservoir **716** to be that of the atmosphere when the pressure in region **487** is allowed to be less than that of atmospheric pressure thus enabling flow of liquid detergent in said region **487**. Said detergent reservoir **450** is preferably made from polypropylene, polystyrene, polycarbonate plastic or allied compatible transparent or see through recyclable plastic. Transparent or see through reservoir **450** better enables management of detergent solution for timely refilling or replacement of said detergent reservoir **450**. Due to anticipated multiple intervention of the reservoir **450** for refilling or replacement a recyclable material for the said reservoir **450** is preferred thus enabling environmental energy and material conservation.

[0226] Referring to FIG. **74**, said detergent containment unit is enabled with a preferably cylindrical conduit **722** were said conduit **722** is preferably of a lesser radius than **716** but contiguous with detergent containment reservoir **716**. Said conduit is enabled with a thicker wall cylindrical annulus region **720** where the central concentric opening **718** is of a lesser radius than the radius of said cylindrical disposed component **722**.

[0227] Referring to FIG. **74**, the lower region of said **722** is internally spirally grooved for accommodating inclusion of valve component **440** shown in FIG. **65** and for interface with region **487** of detergent activation unit **430** shown in FIG. **55**.

[0228] Referring to FIG. **75** what is shown is an inclusion **732** enabled in said annulus region **720** were said inclusion **732** is configured to accommodate component **726** thus enabling said **726** to initiate enabling or disabling flow of detergent from said containment reservoir **716**.

[0229] Referring to FIG. **76**, what is shown is component **726**. Said component **726** is disposed to be characterize as a truncated cone **721** contiguous with a rectangular prism **727** were said rectangular prism **727** functions as a lever for initiating motion of said truncated cone **721**. Said truncated cone **721** is enabled with a conduit **728** where said conduit is enabled with diametric openings on the curved surface of said truncated cone **721**. Said components **726** may preferably be configured from Bakelite, melamine or nylon.

[0230] Referring to FIG. **77**, what is shown is a top view of an embodiment of the containment reservoir **716**. Referring to FIG. **78** what is shown is an orientation of said component **726** in region **732** of **720** when said component

726 disables the flow of detergent from containment reservoir **716**; said conduit **718** is then substantially perpendicular aligned to said conduit **728** such that the flow of detergent fluid is disabled from detergent from containment reservoir **716**. Referring to FIG. **79** what is shown is an orientation of said component **726** in region **732** when said component **726** enables the flow of detergent from containment reservoir **716** of detergent containment reservoir **716**; said conduit **718** is then substantially parallel aligned to with conduit **728** such that the flow of detergent fluid is enabled from containment reservoir **716**.

[0231] Referring FIG. **80**, a clockwise sense of rotation of said lever **20** for the invention will now be enacted. A counterclockwise sense of rotation of lever **20** is a mirrored action for a clockwise sense of rotation. A description for the function of the entity is for an embodiment in which detergent is expelled substantially at about the same time that water is enabled to flow through spout **10** for the washing of hands, thus a coordination between the translation of the piston substantially parallel to the axis of cylindrically disposed **464**; the compressive length of spring of spring **483**; the lift of the cam **410**; the travel of the valve **482** prior to expulsion of detergent; the retraction of the cam **410** prior to completion of the maximum predetermined angle of rotation of lever **20** are enabled and coordinated within the maximum predetermined angle of rotation of said lever **20**. An embodiment of the invention in which the leading edge **486** of piston component **491** is substantially close to outlet valve **482** in the inactive state is preferred for timely dispensing of detergent. The washing of the lever is preferably enabled on the counter rotation of said lever **20** and subsequent to the completion of the maximum predetermined rotation of said lever **20**.

[0232] The washing of the lever **20** is preferably enabled on the counter rotation of said lever **20** and subsequent to the completion of the maximum predetermined angle of rotation of said lever **20** when cam **460** would have retreated while the lever **20** was being turned from the off position to its off position to its maximum predetermined angle of rotation. The vertical line of flow of water from spout **10** is not intercepted by lever **20** when stops **60** and **61** restrict said lever **20** to its predetermined maximum angle of rotation. Thus, the utility of the invention disposes its use to just washing hands with detergent prior to maximum predetermined rotation of said lever **20** when water flows through spout **10** followed by an option to wash said lever after completion of the maximum predetermined rotation of said lever **20**. Consequently, when moveable disc **102** and stationary disc **112** are configured for maximum opening of **114** in the stationary disc for a turn of 90 degrees then a predetermined maximum angle of rotation of lever **20** is greater than 90 degrees consequently stops **60** and **61** on body surface **90** are not disposed to being solely diametrically opposite.

[0233] Referring to FIG. **80** what is shown is a sectional view through a vertical plane of an integrated configuration of said cam component unit **410** shown in FIG. **39**; what is shown are said cartridge component **420** shown in FIG. **40**, said detergent activation unit shown in FIG. **41**, said inlet valve component unit shown in FIG. **42** and said detergent containment unit shown in FIG. **43** when said configuration depicted in FIG. **80** exists in an inactive configuration.

[0234] Referring to FIG. **81** what is shown is a section in a horizontal plane of the detergent activation unit **430**; said cam follower **496** is configured to function as an off-set follower **496** were said off-set cam follower **496** may be enabled with a roller bearing **495**. The cylindrical axis of said cam follower **496** coincides with line **810** of said cylindrically disposed cam follower **496**.

[0235] Referring to FIG. **80** the component **486** of piston component **491** is constrained to be in substantial proximity to valve component **482** thus spring component **483** exists in its relaxed configuration, consequently enabling closure of outlet **478** by said valve component **482**. Referring to FIG. **80**, said component **631** rests on shoulders **629** when valve **632** is deactivated consequently enabling flow of detergent through conduits **628** to region **487** of **464** when said system is primed for initiation to function where such priming action constitutes a back and forth motion of said piston **491** to open and close valve component **632**. Said back and forth motion of piston component **491** initiate opening and closing of valve **632** thus enabling a pressure difference between interior volume **716** of detergent reservoir **450** depicted in FIG. **74** and region **487** of cylinder **498** for the detergent activation unit **430**.

[0236] Referring to FIG. **81** what is shown is a sectional view in a horizontal plane of an integrated configuration of said cam component unit **410** shown in FIG. **39**, said cartridge component **420** shown in FIG. **40**, said detergent activation unit shown in FIG. **41**, said inlet valve component unit shown in FIG. **42** and said detergent containment unit shown in FIG. **43** when said configuration depicted in FIG. **81** exists in an inactive configuration. Member **495** is positioned within groove **437** of cam unit **410**.

[0237] Referring to FIG. **82**, what is shown is a diagrammatic representation of the inactive state of the invention. In the inactive state when a lever handle is parallel to component **496** said valve **632** is normally open while said valve **482** is normally closed. Said leading edge **486** of piston component **491** is substantially close to valve **482** and additionally, outlet spring **483** and inlet spring **621** are in a relaxed state. FIG. **82** shows leading edge **486** and valve **632** between the lines **1021** and **1022**. The outlet **478** is between lines **1022** and **1023**. The outlet **478** diametric dimension is less than that of the separation between lines **1022** and **1023** thus by choosing the travel of the leading edge before opening of valve **478** to be greater than the separation between lines **1021** and **1022** both valves **632** and **482** can be closed to enable build up of pressure in **487** before valve **482** opens to dispel fluid through conduit **478** while valve **632** remains closed.

[0238] It is preferred that detergent be expelled substantially at the same time as the flow of water through spout **10** or immediately prior to the commencement of water flow through spout **10**. Prior expulsion of detergent is enabled when the moveable disc **102** sufficiently blocks area **114** of the stationary disc **112** to allow turning of stem **104** by the lever **20** to enable a cam **460** and follower **496** interaction to activate detergent expulsion prior to water flow through openings **114** of the stationary disc. A geometric relation between the angular position of the cam **410** on the stem **104**, the lift of said cam **410**, the follower **495**, the leading edge **464** and valve **482** can be enabled to allow timely expulsion of detergent within the interval of turning of lever **20**.

[0239] Referring to FIG. **83** what is shown is a vertical sectional view of an integrated configuration of said cam unit **410** shown in FIG. **39**, said cartridge component **420**

shown in FIG. **40**, said detergent activation unit shown in FIG. **41**, said inlet valve component unit shown in FIG. **42** and said detergent containment unit shown in FIG. **43** when said lever **20** has further turned clockwise a predetermined angle say clockwise and the cam unit **410** is at its maximum displacement and the spring **483** exerts a maximum restoring force on the outlet valve unit **482**. As said lever **20** is further rotated clockwise, said cam **460** intercepts said cam follower **496**. Said piston **491** is substantially constrained by channel **492** to only motion by translation consequently enabling predictable functioning of the invention.

[0240] Referring to FIG. **83**, the rotation of lever **20** enables beveled edge **488** of said piston **491** to function as a wedge to intercept and initiate vertical translation of valve member **632** thus dislodging inlet valve component **682** shown in FIG. **67** from its seat **629** and thus initiating distortion of spring **621** and thus enabling a restoring force on said spring **621** and consequently enabling member **632** to propagated normal force on said piston unit component **491** shown in FIG. **60**.

[0241] Thus piston unit component **491** shown in FIG. **60** is acted on by an axial force by said outlet spring member **483** and a normal force by inlet spring member **621** where said inlet spring force by member **621** on said piston unit **491** component functions to oppose the influence of said outlet spring force on said piston unit component **491** and thus enabling the choice of a spring component **621** that would neutralize the influence of spring **483** on the rotation of stem **104** when there is interaction between cam **410** and piston **491**.

[0242] Additionally, vertical motion of valve member **632** further enables closure of said valve **632** thus disabling flow of liquid detergent through conduits **628** to region **487** of cylinder **498** consequently enabling build up of fluid pressure in region **487** of said cylinder **498** when said lever **20** continues to rotate and said valve member **632** continues to maintain a stress on said piston member **491** when valve **482** is still closed.

[0243] Referring to FIG. **83**, said lever **20**, said cam **460** and said stem **104** substantially function as a rigid body thus clockwise motion of lever **20** enables said cam unit **410** to translates piston **491** consequently enabling piston extension **486** to intercept and translate and open outlet valve **482** and thus enable ejection of detergent fluid through outlet **478**.

[0244] Referring to FIG. **83**, said cam **460** on its rise interval has translated said piston extension a measure substantially that of the lift enabled by the said cam **460** thus the extreme point on the radius of said cam **460** lies on the line **810** of the central axis of cam follower **496** depicted in FIG. **84**. Said outlet spring component **483** would thus have been distorted a displacement substantially that of the lift enabled by said cam **460** when said distorted displacement of said spring member **483** is allowable by the physical characteristics of said spring component **483**. Said cam member **460** is predetermined to execute its maximum lift prior the execution of the clockwise maximum predetermined angle of rotation of said lever **20**.

[0245] Referring to FIG. **85**, what is shown is the closure of valve **632** and the opening of valve **482** between lines **1022** and **1023**. Cam **460** now is at its maximum lift while spring **482** is now exerting a maximum restoring force simultaneously as spring **621** exerts a force on piston component **491**. Lever **20** has not yet turned through its maximum predetermined angle. The geometric relation of the stationary disc **112**, the moveable disc **102** and the configuration of lever **20** relative to fixed stops **60** and **61** were said fixed stops **60** and **61** are positioned on the upper surface **130** is shown in FIG. **25**.

[0246] At the initial turn of lever **20** when detergent has been enabled and water flows through spout **10** hands are enabled to be washed and the faucet counter turned to its off mode without enabling washing of lever **20**.

[0247] Referring to FIG. **86**, what is depicted is a configuration wherein said lever **20** has executed its clockwise maximum predetermined angle of rotation and said lever **20** is deterred from further rotation by said limiting cartridge body stop **61**. Said cam **460** is now locked by the follower **496** by the axial force of spring **483** in the off-set configuration with further rotation restricted by body stop **61** and the force of spring **621** acting on piston **449** thus solvent such as water is enabled to flow without interruption when the invention is being utilized say washing of hands. The configuration of the stationary discs **112** and the moveable disc **102** may now be enabled to reduce the flow rate through the spout for the predetermined maximum angle of rotation of the lever **20**.

[0248] Referring to FIG. **87**, what is depicted is a top view configuration of the configuration shown in FIG. **86**.

[0249] Referring to FIG. **87***a* what is shown is a diagrammatic representation in the active state when the lever **20** has been turned through its maximum predetermined angle of turn and the piston **491** would has retreated from the valve **482** while being acted on by a reduced axial force by spring **483**.

[0250] Referring to FIG. **87***a*, the cam **460** has also now retreated and the choice of the dimension of the cross section of outlet conduit **478** and the separation between line **1022** and line **1023** has enabled the closure of valves **482** and valve **632**. The combined force of action by spring **621** on the piston **491** and the reduction of the force of spring **482** coupled with the off set in combination with the action of stop member **61** immobilizes the lever at it maximum predetermined angle of rotation thus water or any other solvent is enabled to flow through the spout **10** without interruption for the washing of hands.

[0251] Referring to FIG. **87***b* what is shown is a section in comparison to FIG. **87***a* that includes outlet **478**. When said cam **460** retracts at the turning of lever **20** to its maximum predetermined angle of rotation, it is preferred that when cam **460** is arrested in the off-set configuration that outlet **478** be enabled between region **1023** and **1024** thus enabling said valve **632** and said valve **482** to be in closure mode thus minimizing dripping or leakage.

[0252] A counter turn of lever **20** to enable said lever to intercept line of flow **777** from the spout **10** enables washing of the lever **20** and further washing of hands.

[0253] When said system depicted in FIG. **86** is being deactivated after use said lever **20** is further rotated counter clockwise thus enabling closure of valve **482** while said valve component **632** opens, thus further counter clockwise rotation of lever **20** enables a pressure difference in region **487** and thus enables flow of detergent in said region **487** when said valve member **482** is enabled to be closed prior to the opening of valve **632**. Said system is now in a state for its next utility function.

[0254] The interaction between said cam **460** and said cam follower **496** is independent of the fixed position of said cam **460** on said upper portion **57** of stem unit **104** thus enabling

flexibility in choice of positioning of said detergent activating system with a faucet system. Additionally multiple configurations are enabled for timely dispensing of fluid while lever **20** is being rotated.

[0255] Referring to FIG. **88** what is shown is a vertical section in a plane symmetric to the detergent activation unit and the detergent reservoir in relation to the position of the cam unit **410**, the cartridge unit and the lever unit in the inactive or closed mode of the invention.

[0256] Referring to FIG. **89**, what is shown is a configuration of the lever, the moveable disc **102** and the fixed disc for the closed mode for FIG. **88**.

[0257] Referring to FIG. **90** what is shown is a vertical section in a plane symmetric to the detergent activation unit and the detergent reservoir in relation to the position of the cam unit **410**, the cartridge unit and the lever unit in the active or open mode of the invention.

[0258] Referring to FIG. **91**, what is shown is a configuration of the lever, the moveable disc **102** and the fixed disc in the open mode for FIG. **90**.

[0259] Referring to FIG. **92**, what is shown is a sectional configuration of a substantial cylindrically disposed solid cartridge mount member **920** enabled with slots **921** for mounting the cartridge unit **420**. Said member **920** functions to laterally encloses cartridge unit **420** with space between the inner wall of **920** and the outer wall of cartridge body **90** for the cartridge unit **420**. Said member **920** also functions to arrest rotary motion of said cartridge body **90** when said cartridge body **90** is associated with said cartridge mount **920** and said tabs **128** of said cartridge body **90** are recessed in symmetrically arranged slots **921** on the perimeter region **919** of said member **920**.

[0260] Referring to FIG. **92**, solid member **920** is configured with a grooved upper end **919** with a smaller diameter for accepting bonnet nut **205**. Said member **920** lower end is configured with a larger diameter region **926**. Said larger diameter region **926** is configured with a grooved access **927** for connection to an inlet conduit and a grooved region **931** for connection to an outlet conduit. The outer surface of said cartridge mount **920** between the upper reduced diameter region **919** and the lower larger diameter region **926** is spirally grooved for rigidly attaching said cartridge mount **920** by nuts to a mounting surface. Such a mounting surface **981** is depicted in FIG. **95**. In an assembly of the invention cartridge unit **420** is stabilized in region **901** of said cartridge mount **920** when flanges **128** of said cartridge body **130** are recessed in slots **921** of said cartridge mount **920**.

[0261] Referring to FIG. **93***a*, what is shown is interface **961** for cartridge unit **420**. Said interface **961** includes a conduit **70** for allowing water through the openings **114** of the stationary disc **112**. Surface **959** on upper portion of **961** interfaces with the lower surface **123** of fixed disc **112** by way of a seal **88** to provide a seal between member **961** and said stationary disc **112** to prevent leakage between **961** and **920**. A space **900** is enabled between the inner wall of cartridge mount **920** and the outer perimeter of flange surface **958** of said interface **961** consequently in a working unit of the invention, said space **900** enables flow from region **110** to region **929** of said cartridge mount **920** thus enabling flow through outlet connection **965** to spout **10**; said **961** is then firmly attached to region **927** of cartridge mount **920** when the fixed disc **112** is situated in region **132** of said cartridge body **90**.

[0262] Referring to **93***b* what is shown is an interfacial inlet attachment **963** with conduit **70**. Said interfacial conduit has a larger grooved diameter region **966** and a smaller grooved diameter region **969**. Said outer grooved larger diameter region **966** locks into inner grooved diameter region **924** of **961** and preferably soldered to **961**. Means **968** is provided for insertion of said conduit **963** into grooved region **924** of **961**. The lesser diameter region **969** of **963** interfaces with water line attachments from an inlet source. FIG. **93** shows a section view of said inlet conduit **963**.

[0263] Referring to FIG. **93***d* what is shown is an outlet attachment **965** with conduit **974** for connecting to the spout **10** of the faucet unit. Said outlet conduit **965** is configured with grooved end portions **970** and **972** and a region **971** between said grooved region **970** and said grooved region **972**. Said region **971** is enabled with means for insertion into access **931** of cartridge mount **920**. It is preferred that **965** be soldered to cartridge mount **920**.

[0264] Referring to FIG. **93***e* when said interface **961** is firmly locked in **927** of the lower region **926** of **920** and said lower surface **123** of fixed disc **112** of cartridge **420** interfaces with the upper surface **959** of **961** and said bonnet nut **205** is attached to **920** to allow the flange **47** of said bonnet nut **205** is applied over the upper surface **130** of the cartridge body **90** and open region **45** of said bonnet nut **205** fully encloses region **59** of the stem **104** then said stem **104** is disposed to be stabilized for interaction with the disc assembly. A washer **922** interfaces **920** and **205**.

[0265] Referring to FIG. **93***e* when the bonnet nut **205** is in firm relation with the upper surface **130** of body **90** of the cartridge unit **420** and said bonnet nut **205** is firmly attached to cartridge mount **920** a seal **88** between the upper surface of **961** and the lower surface **123** of fixed disc **112** is included to prevent leakage between the outer surface of **961** and the inner surface of cartridge **920**. The seal **88** interfaces flange **959** and surface **958** of the upper surface of said **961** with the lower face **123** of the fixed cartridge **112**. The lower grooved end **964** of said **961** would also be firmly attached at **927** of said cartridge mount **920**.

[0266] Referring to FIG. **93***e* said upper region **958** of **961** is configured to accept an elastomeric seal **116** between a ledge **958** of **961** and the lower part **132** of said cartridge body **90**; such a seal **116** functions to prevent leakage between the outer surface of **961** and the interior surface of **920**.

[0267] Referring to **93***e* the attachment between the lower portion **924** of **961** and the lower portion **926** of **920** is enabled with an elastomeric seal **119**. Said seal **119** functions to prevent leakage between **961** and **920**.

[0268] Referring to FIG. **94** what is shown is the embodiment of FIG. **93***e* when input mains water supply attachment **963** is attached and preferably soldered to **961** at access opening **924** of said **961** and output water attachment **965** is attached and preferably soldered to **920** at access opening **931** of said cartridge mount **920**. Said conduit **965** functions to direct water to spout **10** when a water line is connected from conduit **965** to spout **10**. Said attachments **965** and **963** are preferably made from copper, brass or stainless steel and soldered to member **920**.

[0269] Referring to FIG. **95**, what is shown is a section of an embodiment **981** for mounting the invention for use with a wash basin. To secure the detergent activation unit **430** shown in FIG. **48** more ways than one is available; one

available means for securing said detergent activation unit involve having access slots **935** for accepting fasteners to which is attached a nut for bonding said detergent activation unit **430** to said embodiment **981**. Said embodiment member **981** has access openings **947** for receiving cartridge housing **920** for enabling nuts **933** to firmly secure said cartridge housing **920** to said mounting base **981**. Said embodiment member **981** has access openings **947** for receiving cartridge housing **920** to allow nuts **933** to firmly secure said cartridge housing **920** to said embodiment **981**.

[0270] Referring to FIG. **95** said embodiment **981** is enabled with access **939** for receiving spout assembly to allow a nut to secure said spout assembly to said base **981**.

[0271] Referring to FIG. **95** said mounting base **981** is enabled with opening **943** for setting detergent activation unit **430** and also with access openings **935** for receiving bolts **948**. Said bolts **948** firmly associate undercover plate **930** and detergent activation unit to **430** when a nut **942** is applied to **948** in such a manner that the members **930**, **981** and base member **465** of the cartridge activation unit **430** are contiguous and firmly associated.

[0272] Referring to FIG. **96**, what is shown is the embodiment of an under-cover plate **930** for interfacing with mounting base **981** when said **981** is in relation to a wash basin. To secure the under-cover plate **930** more ways than one is available; one available means for securing said detergent activation unit involve having access slots **935"** for accepting fasteners **948** to which is attached a nut **942** for securing said detergent activation unit **430**. Said embodiment member **930** has access openings **947"** where the diameter measurement of said openings **947"** is greater than the measurement of the most significant diameter of nuts **933**. Said openings **947"** enable access for cartridge mount **920**.

[0273] Referring to FIG. **96**, said embodiment **930** is enabled with access **939"** for receiving spout assembly **10** and to allow a nut **933** to secure said spout assembly **10** to said base **981** and to said under-cover plate **930**.

[0274] Referring to FIG. **96**, under-cover plate **930** is enabled with opening **943"** for setting detergent activation unit **430** and also with access openings **935"** for receiving bolts **948**. Said bolts **948** firmly associate undercover plate **930** and detergent activation unit to **930** when a nut **942** is applied to **948** in such a manner that the members **930**, **981** and base member **465** of the cartridge activation unit **430** are contiguous and firmly associated.

[0275] FIG. **97** what is shown is an escutcheon embodiment **940** for mounting on surface **981** when said embodiment is in relation to a wash basin. To secure the escutcheon **940** more ways than one are available; one available means for securing said escutcheon **940** involve having access slots **955** for accepting lever assembly **304** configured so that when said lever assembly is attached to region **58** of stem portion **57** of stem **104** the lower surface of said lever assembly abuts the surface of escutcheon embodiment **940**. To further secure the escutcheon **940** when spout **10** is included in opening **953** and escutcheon **975** is attached to the lower end of said spout **10** the lower edge of escutcheon **975** abuts the surface of escutcheon **940**.

[0276] Said escutcheon **940** shown in FIG. **97** is also enabled with access opening **957** were said access opening **957** accepts lower portion **724** of detergent reservoir unit **450** when said lower portion **724** of the said detergent reservoir unit **450** is attached to region **487** of the detergent activation unit **430**. a nut for securing said detergent activation unit **430**. Referring to FIG. **97** access opening **951** enables availability of detergent when outlet conduit **478** is accepted by said opening **951** of said detergent activation unit **430**.

[0277] Referring to FIG. **97***a* what is shown is a spout assembly **975** for inclusion with spout **10** where said spout escutcheon **977** of spout assembly **975** is enabled to abut an elastomeric washer **976** and said elastomeric washer **976** abuts surface **981** in an assembly of the invention and is in a relation to the lower region of said spout **10**. Nut **944** is applied to the under surface of **981** to firmly attached spout assembly **975** to said **981**. An elastomeric gasket **945** is preferred between said nut **944** and the under surface of **981** in the assembly of the spout assembly **975**. Opening **939"** of undercover gasket **930** is enabled to accommodate the diametric dimensions of nut **944**.

[0278] Referring to FIG. **98** what is shown is an explosion of nut **933**, rubber washer **934** and cartridge housing **920**, the detergent activation unit **430**, the fasteners **948** and nuts **94** in relation to mounting base **981**.

[0279] FIG. **98***a* shows said nut **933**, said washer **934** and said cartridge housing **920** assembled on faucet mounting base **981**.

[0280] Referring to FIG. **99** what is shown is the spatial positioning of order of assembly of detergent activation unit **430**, cam unit **410** and cartridge unit **430** for, bonnet nut **205** and stop attachment **404** for an embodiment in which the detergent activation unit **430** is activated when a right hand-side lever **20** is rotated. The lever handle **305** is not shown.

[0281] Referring to **99***a* shows the assembly of FIG. **99** with escutcheon **940**.

[0282] Referring to **99***b* shows the assembly of FIG. **99***a* with spout assembly **975** and lever handle **304**.

[0283] In summary, the washable faucet lever with cam-activated detergent dispenser is depicted herein that includes a lever cartridge **420** having a stem **104** operably coupled to a hand lever **20** configured to rotate in a lever axis of rotation and operably coupled to a cam member **410** having an arcuate outer surface and configured to rotate in a cam axis of rotation parallel to and simultaneous with the lever axis of rotation. In one embodiment, the cam member **410** has a greater sloping side surface **439** and a lesser sloping side **436** forming the arcuate outer surface. Further, the cam member **410** may also be of an obolid shape. In some embodiments, the arcuate outer surface of the cam member **410** defines a channel guide **437** for the follower **496** and the follower **496** includes a roller bearing **495** configured to translate (e.g., roll or slide) within the channel guide **437** to move the piston **491**. In one embodiment, the cam member **410** is constrained to rotate in a single horizontal plane as discussed above.

[0284] The washable faucet lever with cam-activated detergent dispenser also includes a detergent reservoir member **450** configured to house a liquid detergent therein, having an internal channel **718** configured to receive the liquid detergent, and has a reservoir valve **632** coupled to the detergent reservoir member **450** and operably configured to selectively translate to open and permit flow of the liquid detergent through the internal channel **718** and to close and restrict flow of the liquid detergent through the internal channel **718**. The dispenser also includes an encasement member **498** defining an enclosed region **468** therein, defin-

ing an outlet **478**, having an outlet valve **482** disposed within the enclosed region **468** and operably configured to selectively translate to open and permit flow of the liquid detergent through the outlet **478**, to close and restrict flow of the liquid detergent through the outlet **478**, and biased with a spring **483** retained by the encasement member **498**. Further, the dispenser includes a piston **491** disposed within the enclosed region **468**, having a follower **496** translatably (as discussed herein) coupled to the arcuate outer surface of the cam member **410**, and operably configured to translate within the enclosed region **468** upon rotating the hand lever **20** in the lever axis of rotation to selectively and simultaneously displace the reservoir valve **632** and outlet valve **482** to permit flow of the liquid detergent through the internal channel **718**, into the enclosed region **468**, and out through the outlet **478**.

[0285] In one embodiment, the piston **491** is configured to translate in a single and linear axis of translation within the enclosed region **468** upon rotating the hand lever **20** in the lever axis of rotation to selectively and simultaneously displace the reservoir valve **632** and outlet valve **482**. In additional embodiments, the piston **491** is configured to translate within the enclosed region **468** upon rotating the hand lever **20** in the lever axis of rotation and in one of a counterclockwise or clockwise rotation to selectively and simultaneously displace the reservoir valve **632** and outlet valve **482**. In yet other embodiments, the cam axis of rotation is coaxial with respect to the lever axis of rotation for the benefits discussed herein.

[0286] In some embodiments, a mounting base **981** defines an opening with the lever cartridge **420** disposed therein and coupled thereto with at least one fastener, coupled to the encasement member **498** with at least one fastener, and defines an opening with a faucet member disposed therein, defining a spout **10** with an opening configured to emit liquid therethrough, and coupled thereto with at least one fastener. The dispenser also includes a protective covering **940** defining an opening with the lever cartridge **420** disposed therein, covering the encasement member **498**, defines an opening with the faucet member disposed therein, and defines an opening with the detergent reservoir member **450** disposed therein.

[0287] In one embodiment, the dispenser includes the protective covering **940** defining an internal channel fluidly coupled to the outlet **478** and configured to permit flow of the liquid detergent therethrough and the reservoir valve **632** being biasedly coupled to the detergent reservoir member **450** with a spring. Additionally, the internal channel **718** is spatially configured in the detergent reservoir member **450** to enable gravity-based receipt of the liquid detergent therein.

[0288] Referring to FIG. **100**, what is shown is the configuration of FIG. **99***b* assembled with spout unit **10**, lift rod **18** and bonnet nut **205** were said bonnet nut **205** is firmly associated with cartridge housing **920**. When said bonnet nut **205** is firmly associated with cartridge housing **920** and region **45** of said bonnet nut **205** surrounds region **59** of stem assembly **104** optimum stability of said stem **104** is facilitated. The outer surface of region **59** of stem unit **104** is enabled to rotate substantially frictionally against the inner surface **45** of the bonnet nut by the application of a Teflon coating to said surface **59** of stem unit **104**.

[0289] Referring to FIG. **101**, what is shown is the configuration of FIG. **100** assembled with the detergent reservoir unit **450** in region **487**. Said access opening **487** is spirally grooved to be compatible with the externally spirally grooved portion **724** of reservoir unit **450** such that when portion **724** is spiraled into access **487** said detergent reservoir is firmly attached to the detergent activation unit.

[0290] Referring to FIG. **102** what is shown is an exploded conceptual view of an embodiment of the invention with under cover plate **930**. The diameter of openings **947"** of said undercover plate **930** is superior to that the most significant diameter of nut **933** thus minimizing interaction influence with the cartridge unit when the detergent activation unit is being activated.

[0291] Additionally, said under cover plate **930** interfaces securely with mounting **981** when nut **944** is attached to region **955** of spout **10** shown in FIG. **102**; in such a manner said nut **944** functions to secure **930** to the lower face **981**. Said under-cover plate is further stabilized when screws **948** are introduced from the upper surface of **498** through openings **497** of said **498** then through openings **935** of **981** and then through openings **935"** of **930** thus enabling screw fasteners to be chosen and be applied to firmly bond together the body **465** the of detergent activation unit **430**, the mounting block **981** and said undercover plate **930** by one or more screw nut fasteners **942**.

[0292] Referring to FIGS. **103***a*, **103***b* and **103***c*, what is shown is another embodiment of the water line system into the cartridge unit and water line system out of the cartridge unit for the invention. The embodiment shown for FIG. **103***a*, FIG. **103***b* and FIG. **103***c* are an alternative for what has been previously described and thus only information related to this embodiment for installation and assembly needs to be described. The valve chamber is composed of an inlet tube **961'**, a main tube body **920'**and an outlet/inlet sleeve **963'**. The inlet tube **961'** is preferably made from copper of brass or stainless steel and formed with an inlet tunnel **70'**. The outer circumference of the upper end of the inlet tube **961'** is formed with an annular engaging section **958'**with a larger diameter. The middle portion is milled to form a stepped section. An annular flow guiding rib **967'** with a larger diameter is adjacent to the lower side of the stepped section. A water sealing ring **119'** is fitted under the flow guiding rib **967'**. The lower end of the inlet tube **961'** under the flow guiding rib **967'** is milled with a locking outer thread section **964'**. The main tube body **920'** is also made from copper, brass or stainless steel and milled to form an internal receiving tunnel **901'**. The inner circumference of the receiving tunnel **901'** near the lower end thereof is formed with an annular stop section **925'**. The outer circumference of the upper end of the main tube body **920'**is formed with an outer thread section **921'**with a smaller diameter. The edge of the upper opening is cut with two diametric notches **921'**. The middle portion of the main tube body **920'** is formed with a main outer thread section **903'**with a certain length. The lower end of the main tube body **920'**under the main thread section **903'** is a smaller diameter section milled with fastening outer thread section **902'**. A water sealing ring **117'**is fitted on the small diameter section. The out/let sleeve **963'** is made by pressing cast. The center thereof is with a stepped adapting flow passage **910**. The opening of the larger diameter section of the adapting flow passage **910'** is formed with a fastening inner thread section **904'** and the smaller diameter section thereof is formed with a locking inner thread section **909'**. A lower side of the outlet/inlet tube **50'** is formed with an inlet tube **908'**and a lateral side thereof

is formed with an outlet tube **906'**. The inlet tube **908'**and the outlet tube **906'** both communicate with the adapting flow passage **910'**. In addition, the outer circumference of the end of the inlet tube **908'** is formed with an inlet outer thread section **907'** while the outer circumference of the end of the tube **906'** is formed with an outlet outer thread section **905'**.

[0293] Referring to FIG. **104**, when assembled the inlet tube **961'** is first fitted with the receiving tunnel **901'** of the main tube body **920'** with the engaging section **958'** engaged with stop section **925'** of main tube body **920'**. At this time, the inlet tube **961'** is preliminary assembled with the main tube body **920'** with locking outer thread section **964'** of the inlet tube **961'** extending out of the main tube body **920'** to be screwed in with the locking inner thread section **909'** of the outlet/inlet sleeve **963'**. The locking outer thread section **47' 902'** of the main tube body **920'** is screwed with the fastening inner thread section **904'** of the outlet/inlet tube **963'**. Under such circumstances the inlet tube **961'**, main tube body **920'** and the outlet/inlet tube **963'** are integrally associated together. A valve chamber xxx' with a certain depth is defined between the upper end of the engaging section **958'** of the inlet tube **961** and the upper opening of the receiving tunnel **901'**of the main tube body **920'**. Also, an annular outlet passage **900'** with a certain size is defined between the outer circumference wall of the tube **961'**and the inner circumference walls of the main tube body **920'** and the large diameter section of the outlet/inlet sleeve **963'**. At this moment, the insertion of the cartridge unit and stabilization of the cartridge by bonnet nut completes the assembly for the functioning of the cartridge chamber.

[0294] Referring to FIG. **105** what is shown is an alternative embodiment of the stem portion **57'** for the cartridge **604**. Said stem portion **57'** has an upper region **258** configured as a rectangular prism for inserting said portion **258** into rectangular access **234** of the lever assembly **814**; said lever assembly **814** is shown in FIG. **108**. Contiguous with portion **258** of stem portion **258** is cam attachment region **252**; said region **252** fits into rectangular access opening **234** of cam unit **810**. Cam unit **810** is shown in FIG. **111**. Contiguous with region **252** of stem portion **57'** is a cylindrical region **259** were said cylindrical region **259** fits into smooth inner circular opening **45** of bonnet nut **205** shown in FIG. **110**. Said bonnet nut **205** when assembled is firmly attached to cartridge housing **920** and thus said bonnet nut is disabled from motion when the lever assembly **814** is rotated. A section view of bonnet nut **205** is shown in FIG. **109**. Referring to FIG. **106** what is shown is an alternative embodiment **89** for intercepting body stops **260** and **261** and thus restricting the rotation of lever unit to its maximum predetermined angle of rotation. Said embodiment **89** has rectangular opening that intimately fits over region **256** of region **57'** of the stem unit **104'** shown in FIG. **105**. FIG. **107** shows a configuration of **89** fitted onto the upper surface **230** of the cartridge body **90**.

[0295] Referring to FIG. **112**, when the cartridge stem is already inserted in body passage **68** member **89** is first attached to region **256**; bonnet nut **814** is then applied to the cartridge housing **920** to stabilize the cartridge unit; bonnet nut **814** now completely encloses member **89**. Subsequently cam body unit **810** is attached above the bonnet nut and followed by attachment of lever assembly **814**.

[0296] Other features and advantages will become apparent from the following description preferably taken relative to the accompanying drawings, which in combination discloses an embodiment of the invention. It is apparent for example, that a dispensing of detergent while enabling reduction in flow rate from the faucet' spout of the invention when the lever is turned its maximum predetermined angle enables an embodiment of the invention where the lever remains unwashed for appropriate dimensioning of said lever.

What is claimed is:

1. A washable faucet lever with cam-activated detergent dispenser comprising:

a lever cartridge having a stem operably coupled to a hand lever configured to rotate in a lever axis of rotation and operably coupled to a cam member having an arcuate outer surface and configured to rotate in a cam axis of rotation parallel to and simultaneous with the lever axis of rotation;

a detergent reservoir member configured to house a liquid detergent therein, having an internal channel configured to receive the liquid detergent, and having a reservoir valve coupled to the detergent reservoir member and operably configured to selectively translate to open and permit flow of the liquid detergent through the internal channel and to close and restrict flow of the liquid detergent through the internal channel;

an encasement member defining an enclosed region therein, defining an outlet, having an outlet valve disposed within the enclosed region and operably configured to selectively translate to open and permit flow of the liquid detergent through the outlet, to close and restrict flow of the liquid detergent through the outlet, and biased with a spring retained by the encasement member; and

a piston disposed within the enclosed region, having a follower translatably coupled to the arcuate outer surface of the cam member, and operably configured to translate within the enclosed region upon rotating the hand lever in the lever axis of rotation to selectively and simultaneously displace the reservoir valve and outlet valve to permit flow of the liquid detergent through the internal channel, into the enclosed region, and out through the outlet.

2. The washable faucet lever with cam-activated detergent dispenser according to claim **1**, wherein the cam member further comprises:

a greater sloping side surface and a lesser sloping side forming the arcuate outer surface.

3. The washable faucet lever with cam-activated detergent dispenser according to claim **1**, wherein the cam member is of an obolid shape.

4. The washable faucet lever with cam-activated detergent dispenser according to claim **1**, wherein the arcuate outer surface of the cam member defines a channel guide for the follower.

5. The washable faucet lever with cam-activated detergent dispenser according to claim **4**, wherein the follower further comprises:

a roller bearing configured to translate within the channel guide.

6. The washable faucet lever with cam-activated detergent dispenser according to claim **1**, wherein the cam member is constrained to rotate in a single horizontal plane.

7. The washable faucet lever with cam-activated detergent dispenser according to claim **1**, wherein the piston is configured to translate in a single and linear axis of translation

within the enclosed region upon rotating the hand lever in the lever axis of rotation to selectively and simultaneously displace the reservoir valve and outlet valve.

8. The washable faucet lever with cam-activated detergent dispenser according to claim **1**, wherein the piston is configured to translate within the enclosed region upon rotating the hand lever in the lever axis of rotation and in one of a counterclockwise or clockwise rotation to selectively and simultaneously displace the reservoir valve and outlet valve.

9. The washable faucet lever with cam-activated detergent dispenser according to claim **1**, wherein the cam axis of rotation is coaxial with respect to the lever axis of rotation.

10. The washable faucet lever with cam-activated detergent dispenser according to claim **1**, further comprising:

a mounting base defining an opening with the lever cartridge disposed therein and coupled thereto with at least one fastener, coupled to the encasement member with at least one fastener, and defining an opening with a faucet member disposed therein, defining a spout with an opening configured to emit liquid therethrough, and coupled thereto with at least one fastener; and

a protective covering defining an opening with the lever cartridge disposed therein, covering the encasement member, defining an opening with the faucet member disposed therein, and defining an opening with the detergent reservoir member disposed therein.

11. The washable faucet lever with cam-activated detergent dispenser according to claim **10**, wherein the protective covering defines an internal channel fluidly coupled to the outlet and configured to permit flow of the liquid detergent therethrough.

12. The washable faucet lever with cam-activated detergent dispenser according to claim **1**, wherein the reservoir valve is biasedly coupled to the detergent reservoir member with a spring.

13. The washable faucet lever with cam-activated detergent dispenser according to claim **1**, wherein the internal channel is spatially configured in the detergent reservoir member to enable gravity-based receipt of the liquid detergent therein.

* * * * *