US012407347B2

(12) **United States Patent**
Wada et al.

(10) **Patent No.: US 12,407,347 B2**
(45) **Date of Patent: Sep. 2, 2025**

(54) **GATE DRIVER, INSULATION MODULE, LOW-VOLTAGE CIRCUIT UNIT, AND HIGH-VOLTAGE CIRCUIT UNIT**

(71) Applicant: **ROHM CO., LTD.**, Kyoto (JP)

(72) Inventors: **Keiji Wada**, Kyoto (JP); **Bungo Tanaka**, Kyoto (JP); **Kosei Osada**, Kyoto (JP)

(73) Assignee: **ROHM CO., LTD.**, Kyoto (JP)

(*) Notice: Subject to any disclaimer, the term of this patent is extended or adjusted under 35 U.S.C. 154(b) by 77 days.

(21) Appl. No.: **18/226,293**

(22) Filed: **Jul. 26, 2023**

(65) **Prior Publication Data**

US 2023/0370064 A1 Nov. 16, 2023

Related U.S. Application Data

(63) Continuation of application No. PCT/JP2022/002654, filed on Jan. 25, 2022.

(30) **Foreign Application Priority Data**

Feb. 3, 2021 (JP) 2021-015944

(51) **Int. Cl.**
H03K 17/00 (2006.01)
H01F 19/04 (2006.01)
H03K 17/691 (2006.01)

(52) **U.S. Cl.**
CPC ***H03K 17/691*** (2013.01); ***H01F 19/04*** (2013.01)

(58) **Field of Classification Search**
CPC .. H03K 17/691; H01F 2019/085; H01F 19/04
See application file for complete search history.

(56) **References Cited**

U.S. PATENT DOCUMENTS

10,320,448	B2 *	6/2019	Subramonian	H04B 5/79
10,917,139	B2 *	2/2021	Uo	H03H 7/09
2013/0055052	A1	2/2013	Kaeriyama	
2013/0321094	A1 *	12/2013	Sumida	H01L 28/10 333/24.2
2014/0325322	A1	10/2014	Kaeriyama	
2017/0154727	A1 *	6/2017	Spina	H01L 23/66
2021/0119590	A1 *	4/2021	Du	H03F 3/245

FOREIGN PATENT DOCUMENTS

JP	H02-151261 A	6/1990
JP	2013-051547 A	3/2013
JP	2014-522561 A	9/2014

OTHER PUBLICATIONS

International Search Report and Written Opinion mailed on Mar. 8, 2022, received for PCT Application PCT/JP2022/002654, filed on Jan. 25, 2022, 9 pages including English Translation.

* cited by examiner

Primary Examiner — Tuan T Lam
(74) *Attorney, Agent, or Firm* — XSENSUS LLP

(57) **ABSTRACT**

A gate driver includes a low-voltage circuit configured to be actuated by application of a first voltage and a high-voltage circuit configured to be actuated by application of a second voltage that is higher than the first voltage. The gate driver also includes a transformer and a capacitor connected in series to the transformer. The low-voltage circuit and the high-voltage circuit are connected by the transformer and the capacitor and configured to transmit a signal through the transformer and the capacitor.

13 Claims, 22 Drawing Sheets

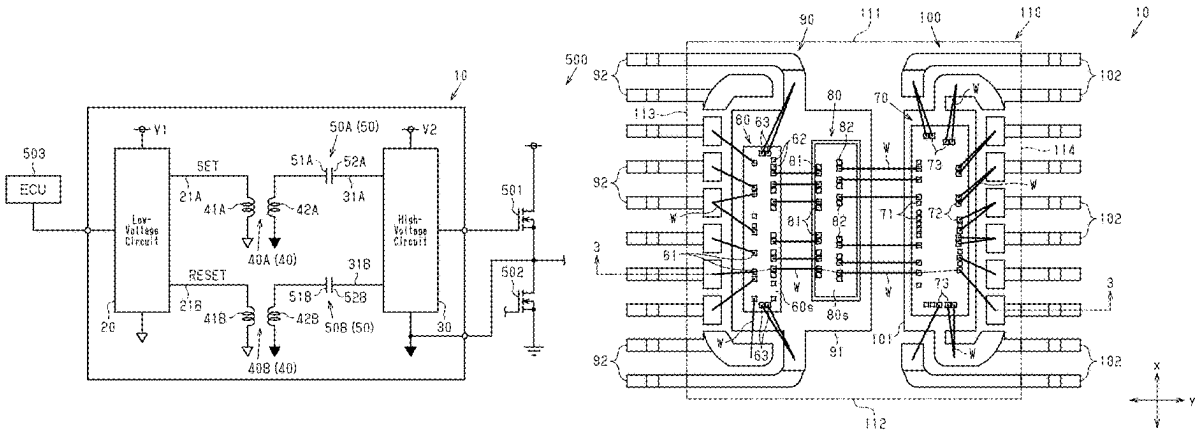

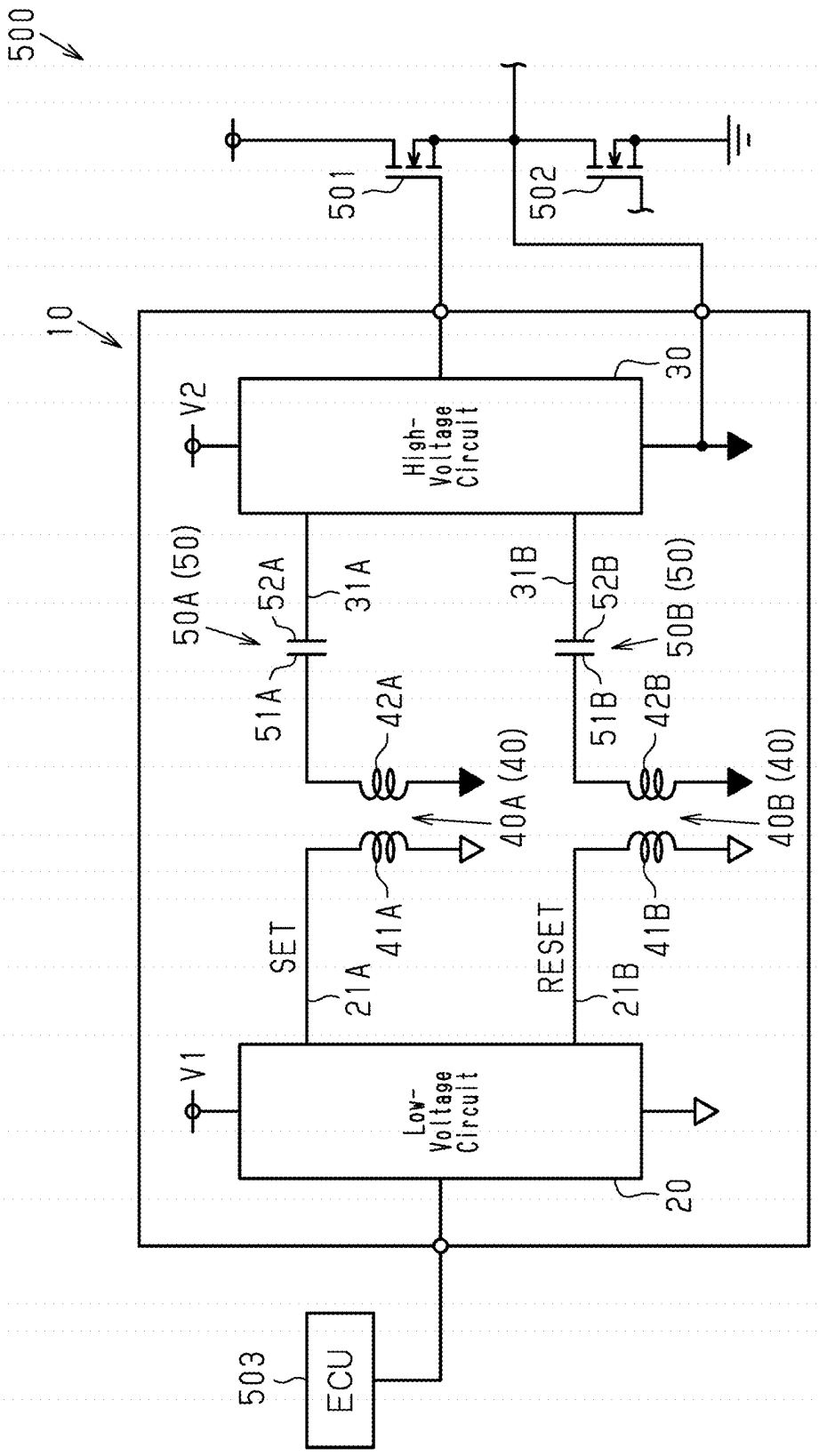
500
501
502
10
V2
High-Voltage Circuit
30
50A (50)
52A
31A
31B
52B
50B (50)
51A
42A
51B
42B
40A (40)
40B (40)
SET
41A
RESET
41B
21A
21B
V1
Low-Voltage Circuit
20
503
ECU

Fig.1

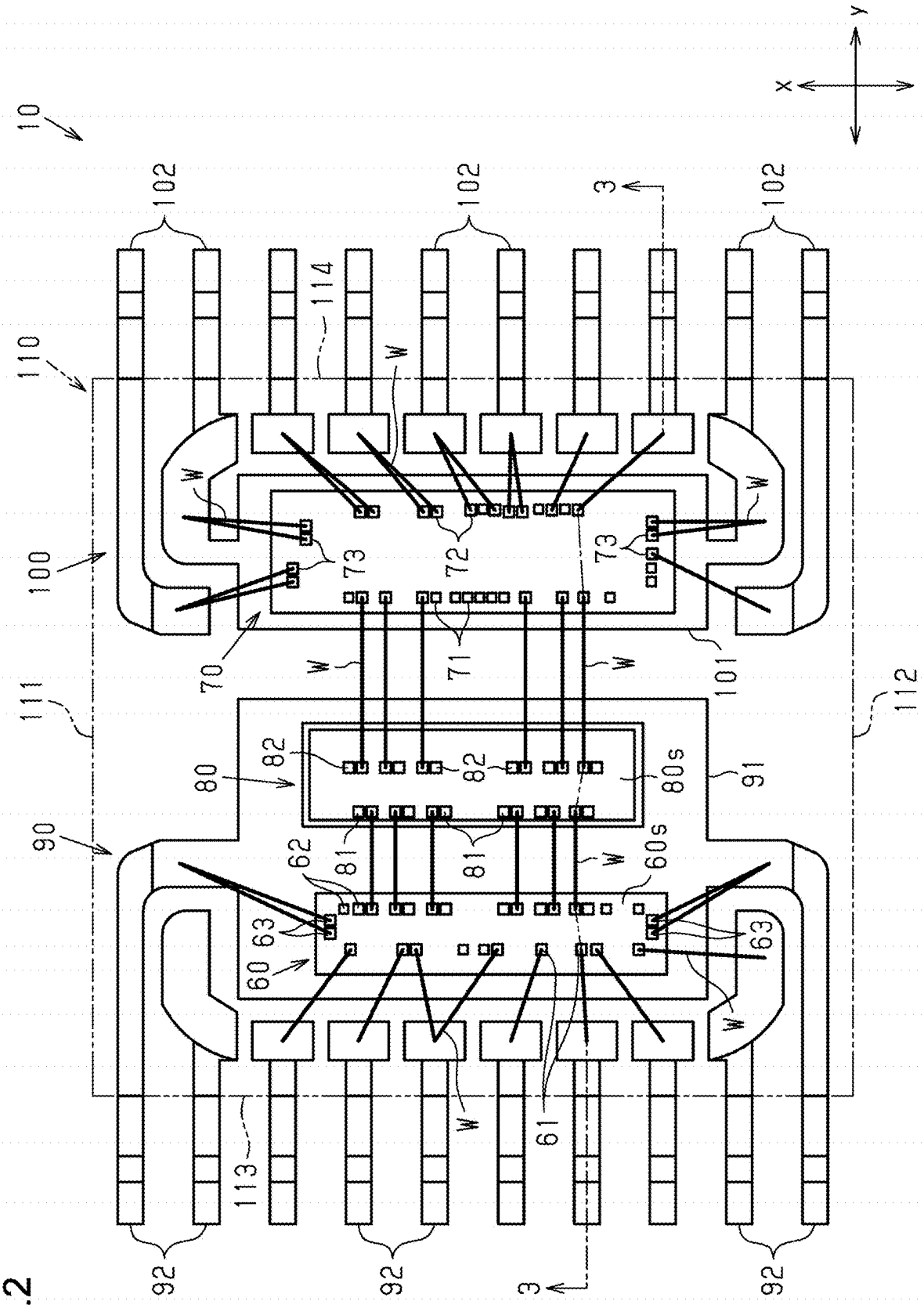
10
110
100
111
90
102
114
W
73
72
70
71
101
112
80
82
80s
91
81
62
60s
63
60
61
113
92
3
x
y

Fig.2

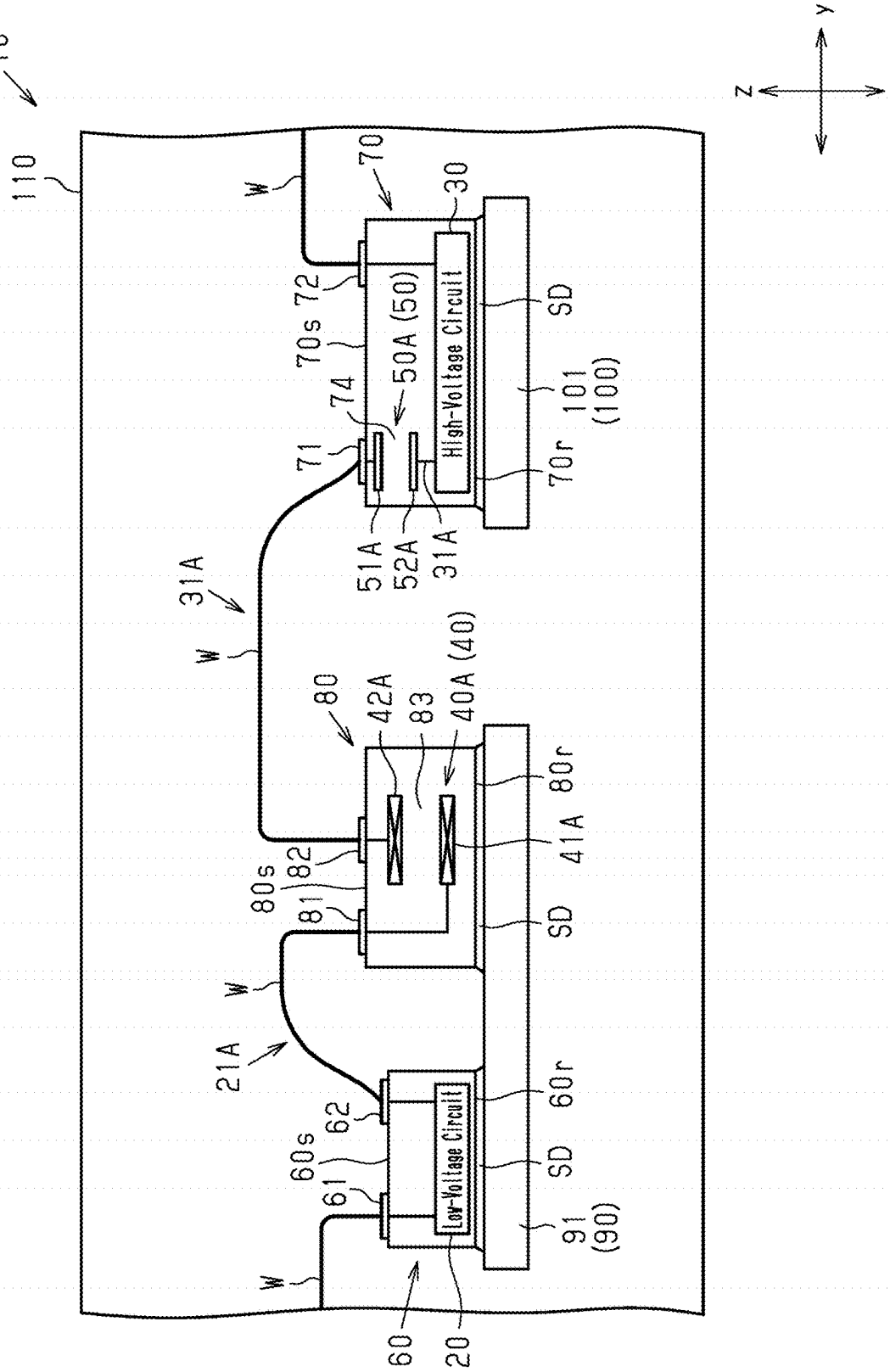
10
110
W
70
30
72
70s
50A (50)
High-Voltage Circuit
SD
101
(100)
74
71
70r
51A
52A
31A
31A
W
80
42A
83
40A (40)
80r
41A
80s
82
81
SD
W
21A
62
60r
60s
61
Low-Voltage Circuit
SD
91
(90)
W
60
20
Z
Y

Fig.3

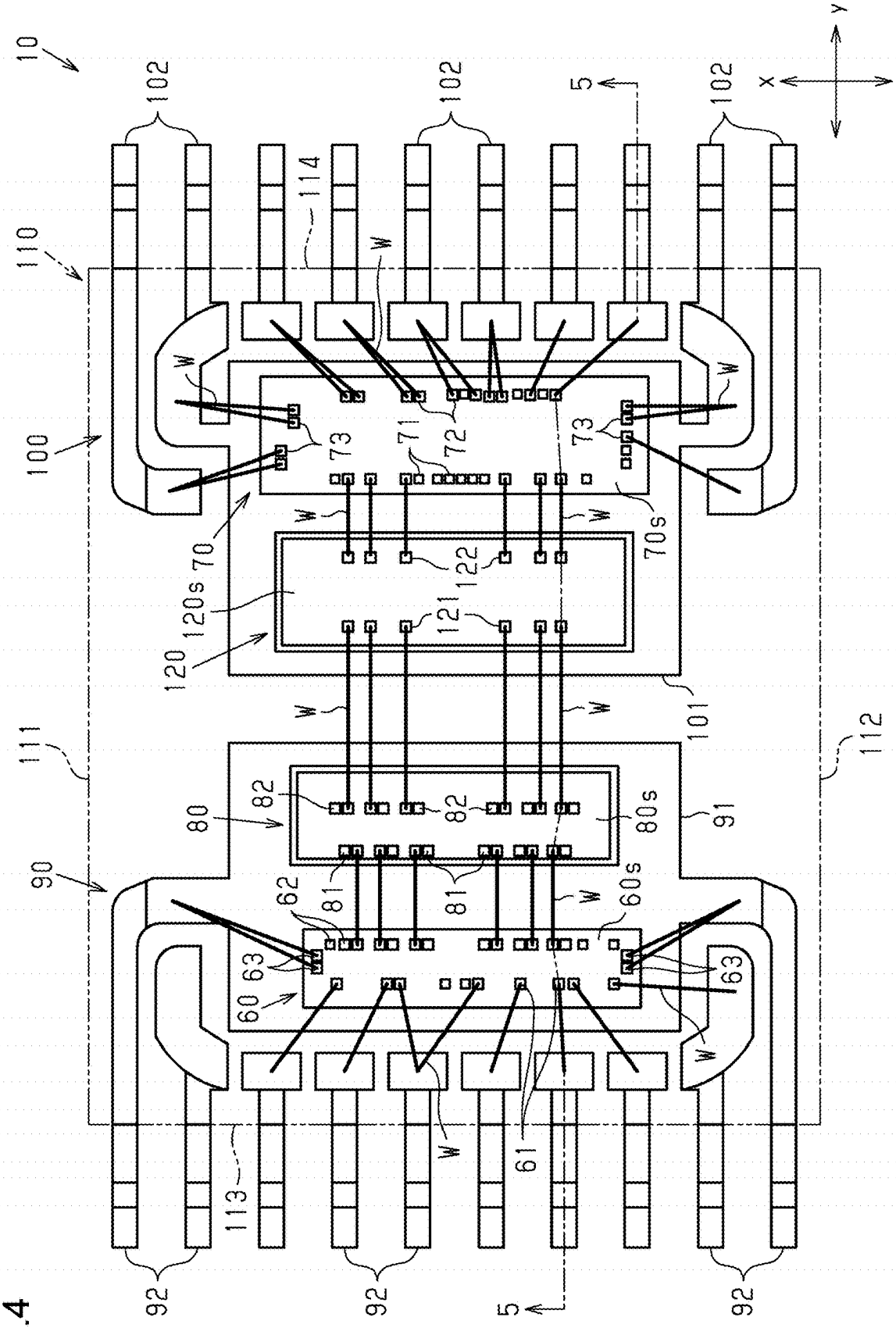
10
102
102
102
5
x
y
114
110
W
100
73
71
72
73
70
70s
122
120s
121
120
101
111
112
82
82
80
80s
91
90
81
81
62
60s
63
63
60
61
113
92
92
92
5

Fig.4

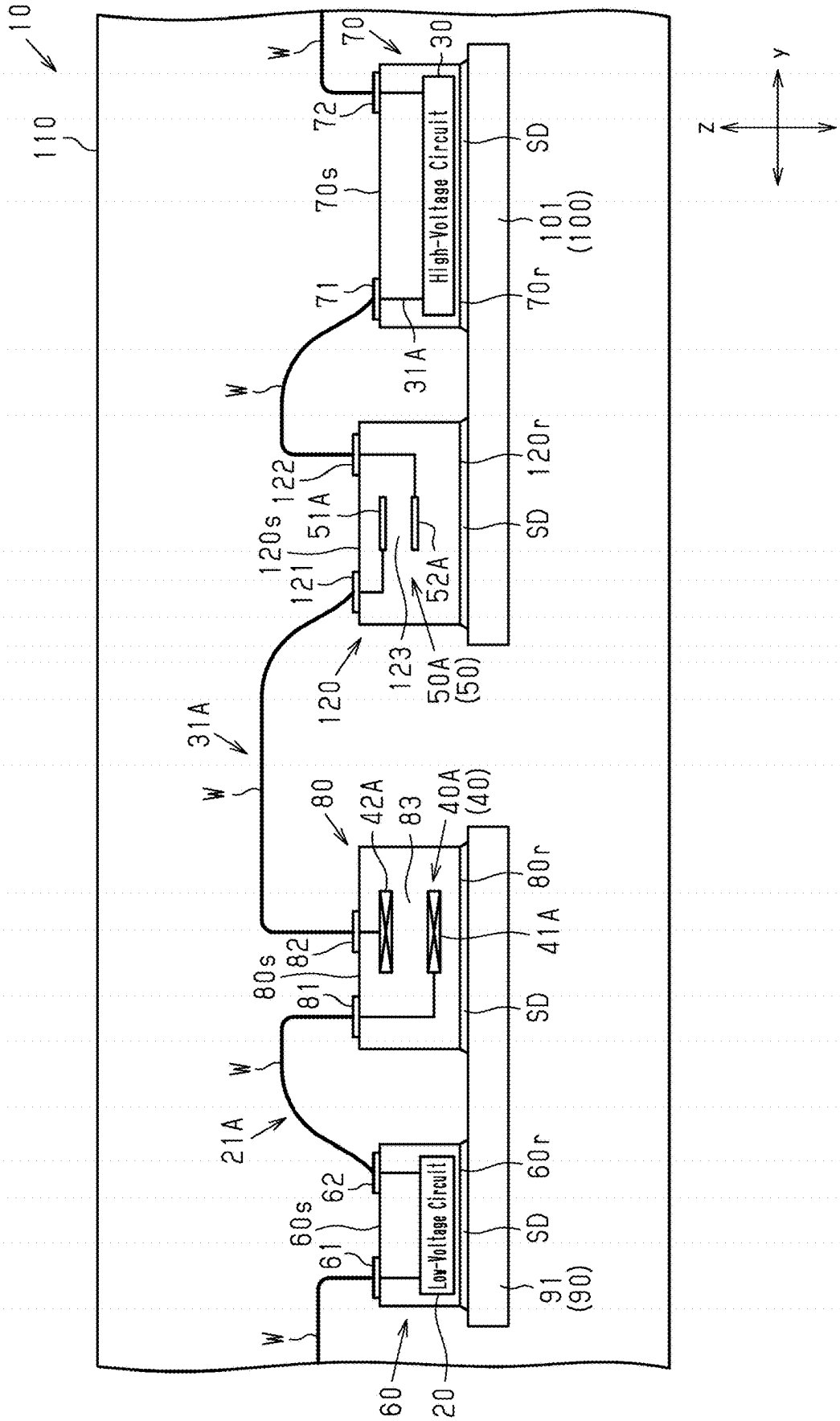
10
110
W
70
30
72
70s
High-Voltage Circuit
SD
101
(100)
71
70r
31A
122
120r
51A
120s
121
52A
123
50A
(50)
120
31A
80
42A
83
40A
(40)
80r
41A
82
80s
81
21A
62
60r
60s
61
Low-Voltage Circuit
91
(90)
60
20
Z
Y

Fig.5

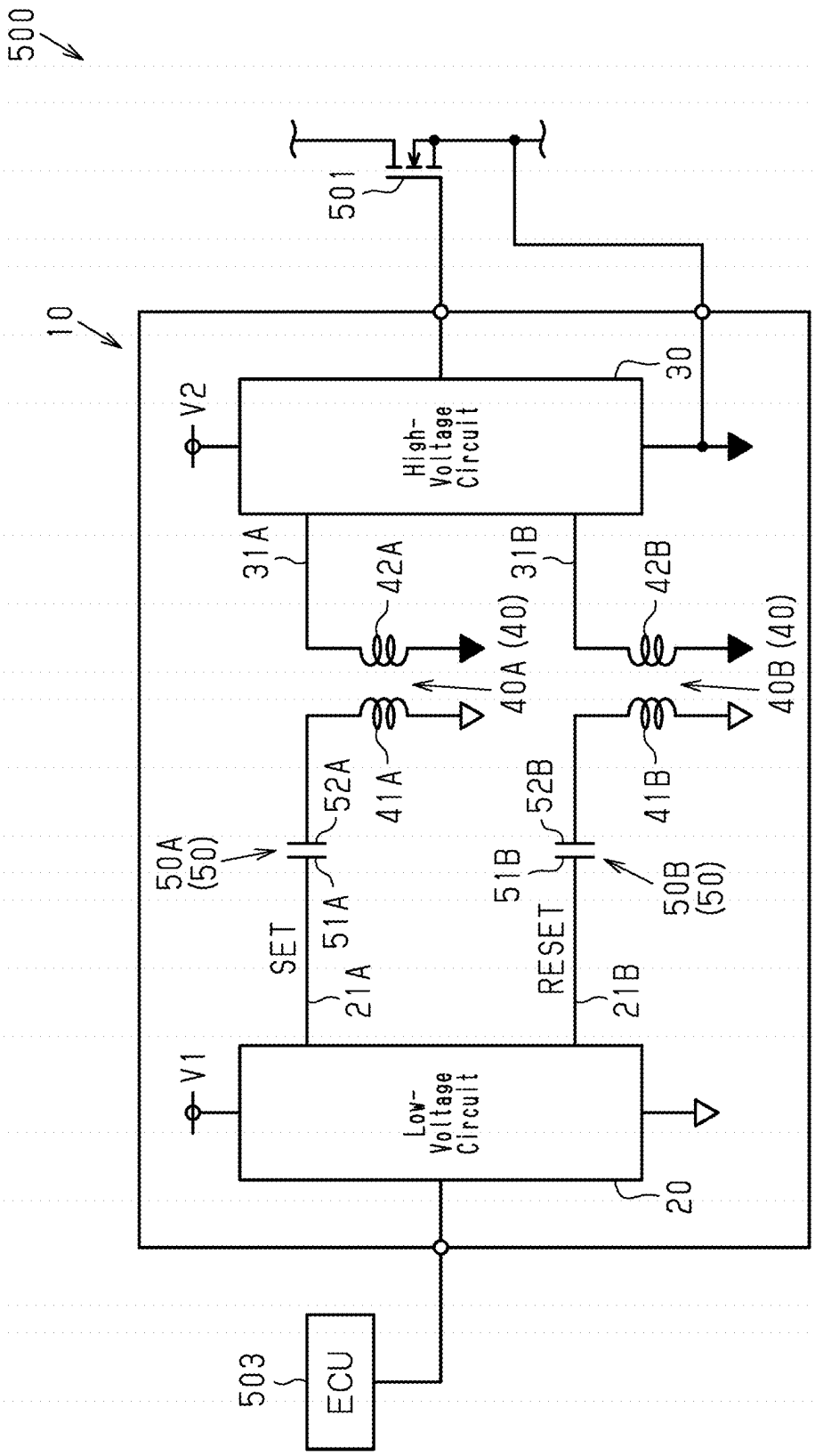
500
501
10
V2
High-Voltage Circuit
30
31A
42A
31B
42B
40A (40)
40B (40)
41A
41B
52A
52B
50A (50)
51A
51B
50B (50)
SET
RESET
21A
21B
V1
Low-Voltage Circuit
20
503
ECU

Fig.6

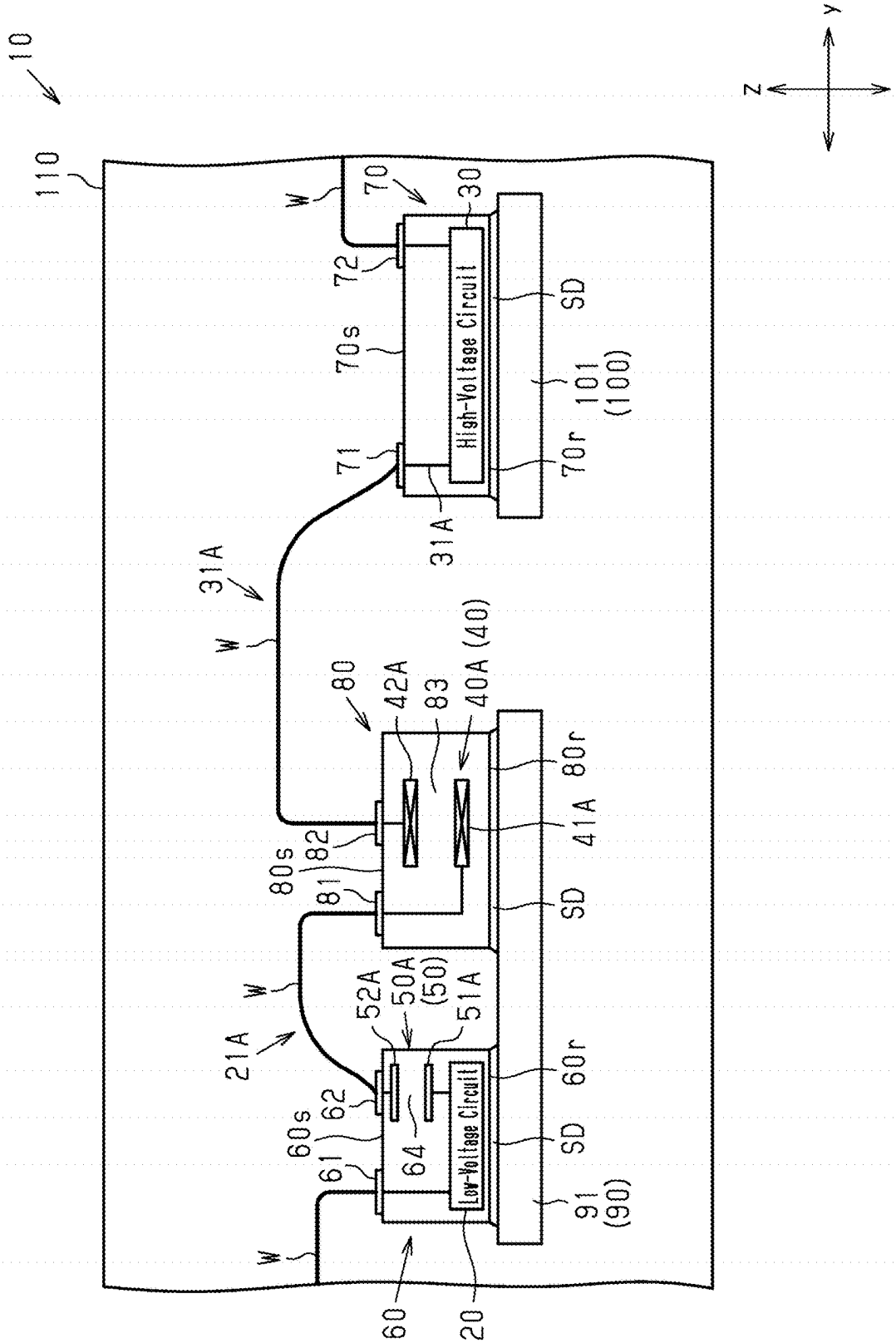
10
110
W
70
30
72
70s
High-Voltage Circuit
SD
101
(100)
71
70r
31A
31A
W
80
42A
83
40A (40)
80r
41A
80s
82
81
SD
W
52A
50A
(50)
51A
21A
62
60r
60s
61
64
Low-Voltage Circuit
SD
91
(90)
W
60
20
Z
Y

Fig.7

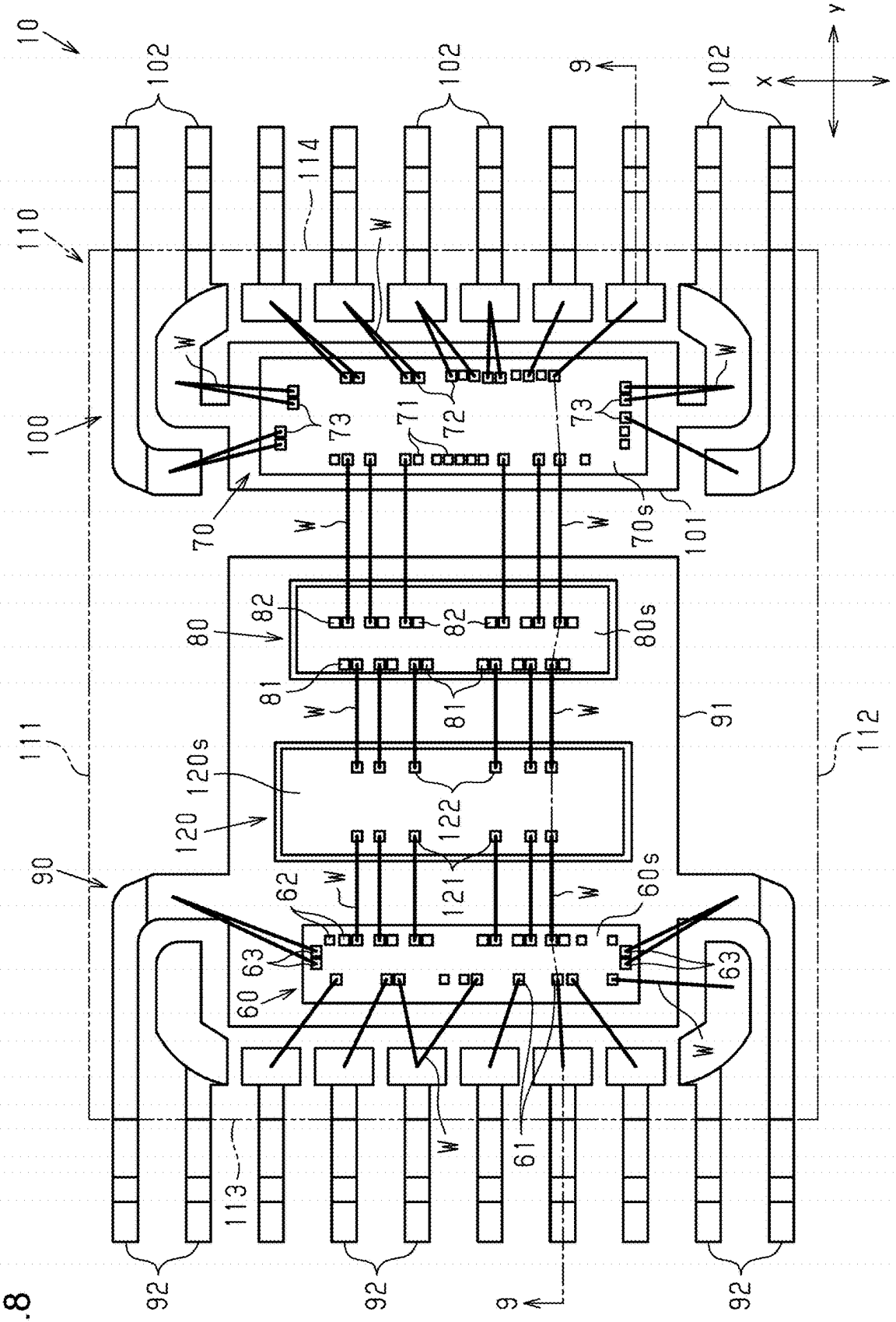
10
102
102
102
9
x
y
114
110
W
100
73
71
72
73
70
70s
101
82
80
82
80s
81
81
91
111
112
120s
120
122
121
90
62
60s
63
63
60
61
113
92
92
92
9

Fig.8

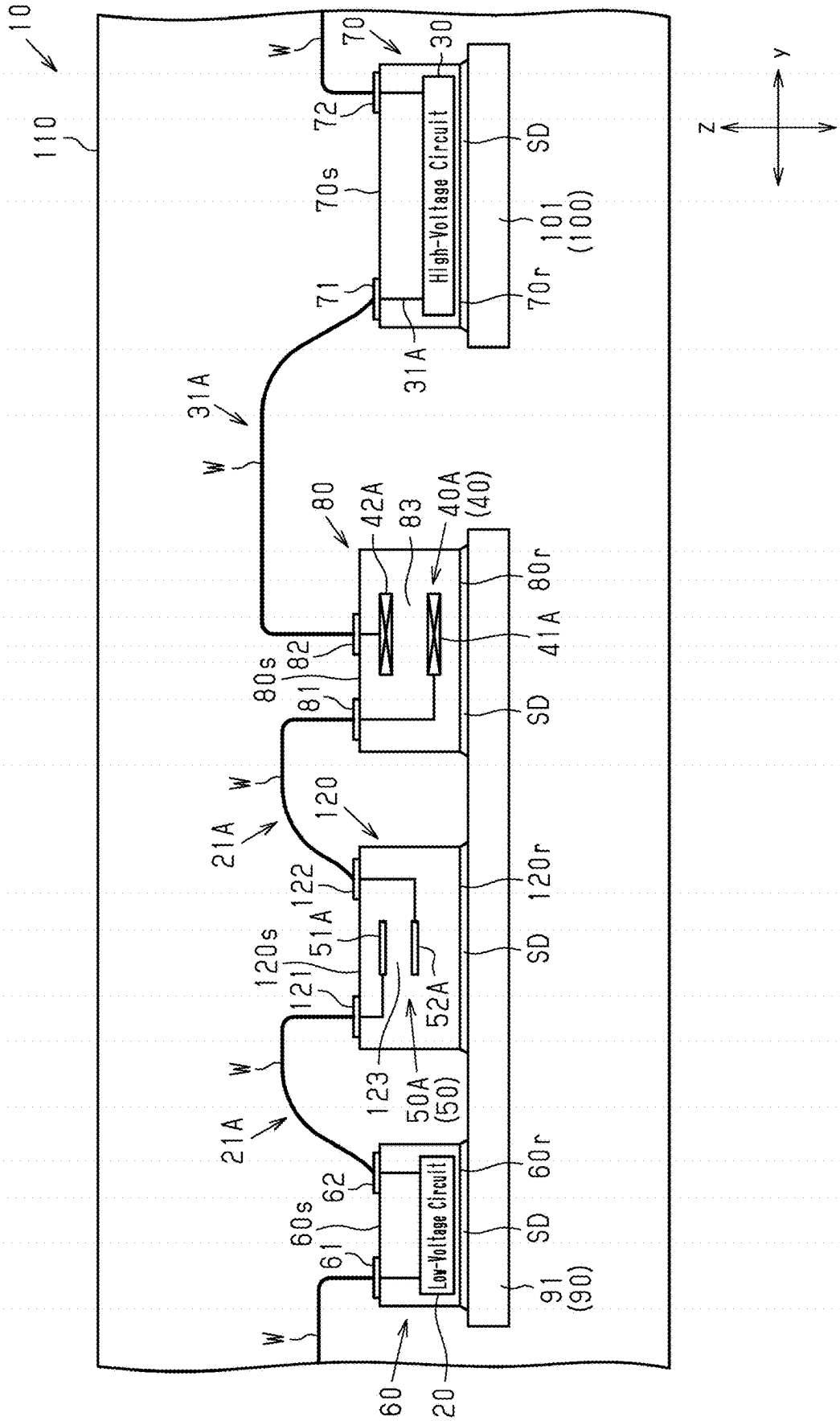
10
110
W
70
30
72
70s
High-Voltage Circuit
SD
101
(100)
71
70r
31A
31A
W
80
42A
83
40A
(40)
80r
41A
82
80s
81
SD
W
120
21A
122
120r
51A
120s
121
SD
52A
123
50A
(50)
W
21A
62
60r
60s
61
Low-Voltage Circuit
SD
91
(90)
W
60
20
y
z

Fig.9

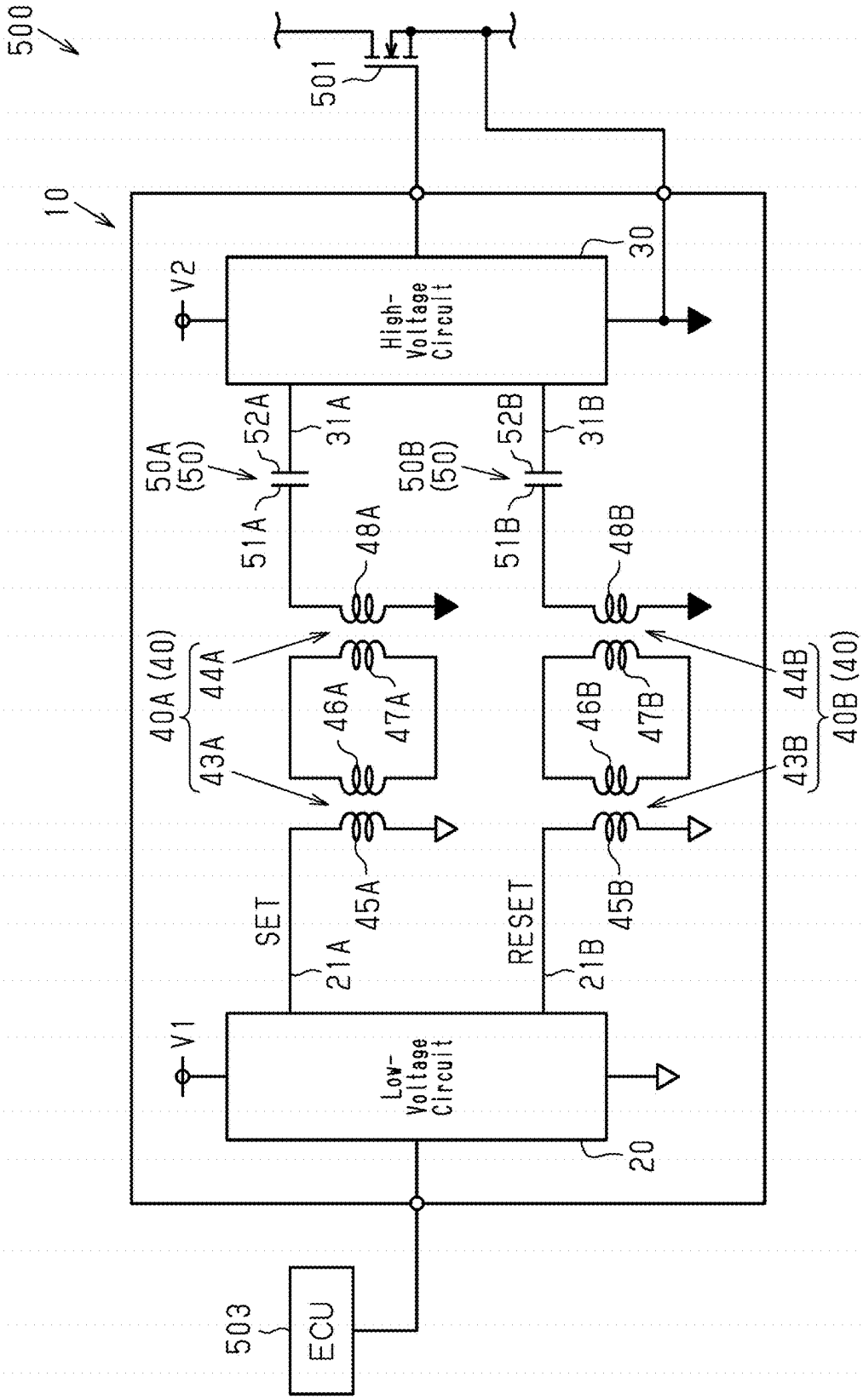
500
501
10
V2
High-Voltage Circuit
30
52A
31A
52B
31B
50A (50)
50B (50)
51A
51B
48A
48B
40A (40)
44A
43A
46A
47A
46B
47B
44B
43B
40B (40)
45A
45B
SET
RESET
21A
21B
V1
Low-Voltage Circuit
20
503
ECU

Fig.10

Fig.11

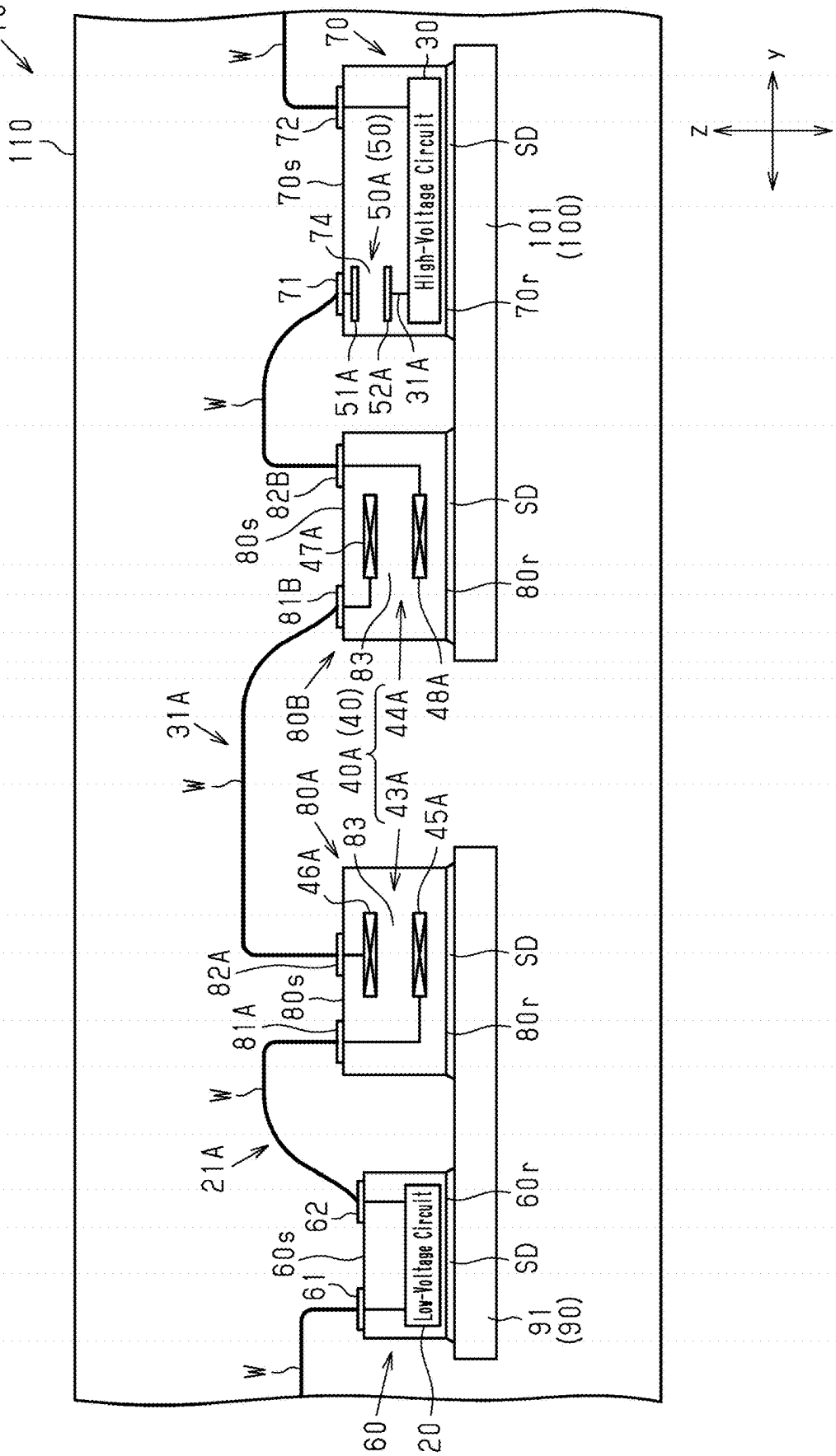
10
110
W
70
30
72
70s
50A (50)
High-Voltage Circuit
SD
101
(100)
74
71
70r
51A
52A
31A
82B
80s
47A
81B
80r
83
80B
44A
48A
31A
40A (40)
43A
80A
46A
45A
82A
81A
21A
60r
62
60s
61
Low-Voltage Circuit
91
(90)
60
20
z
y

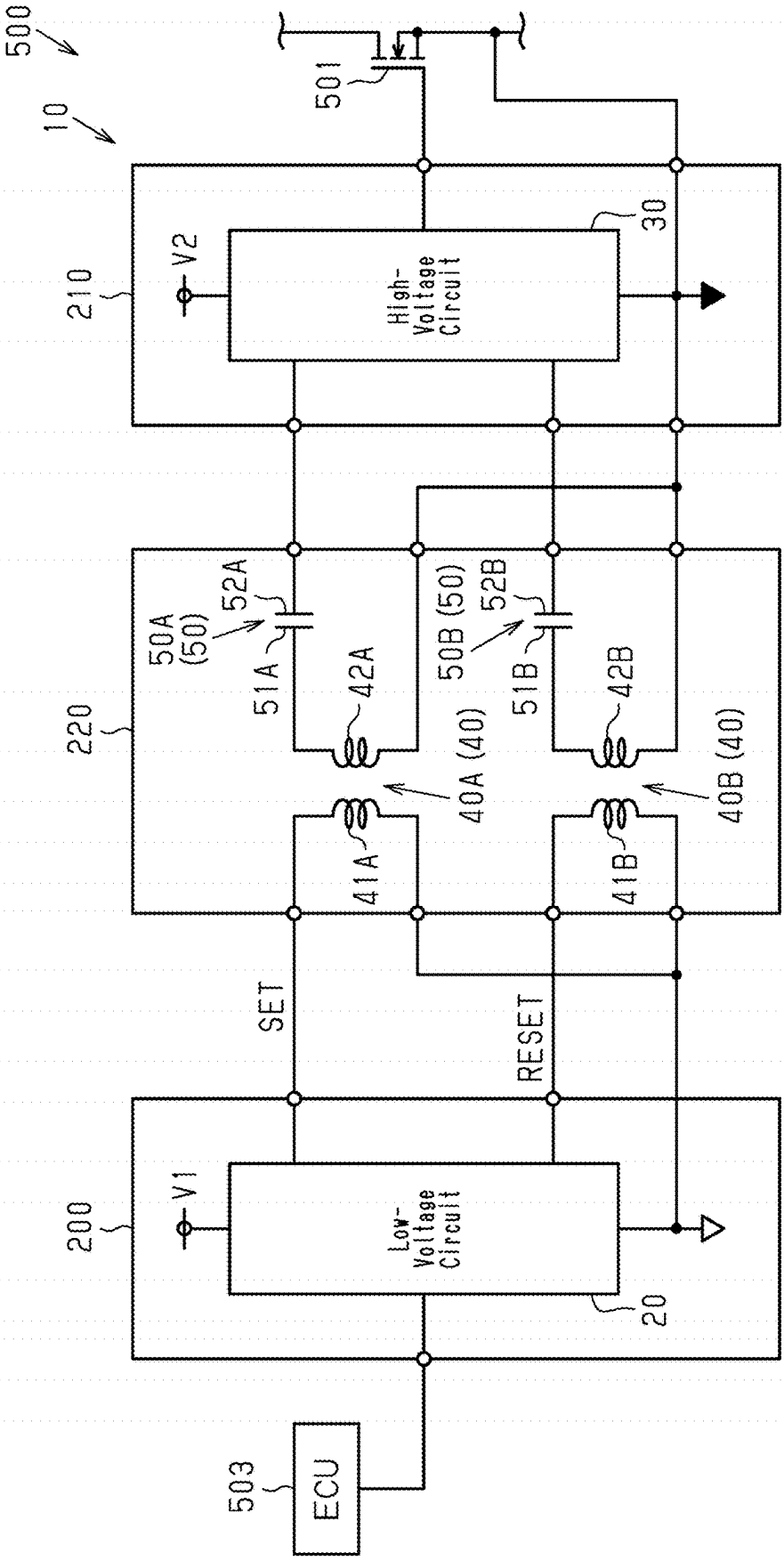
500
10
501
210
V2
High-Voltage Circuit
30
220
50A (50)
52A
51A
42A
50B (50)
52B
51B
42B
40A (40)
40B (40)
41A
41B
SET
RESET
200
V1
Low-Voltage Circuit
20
503
ECU

Fig.12

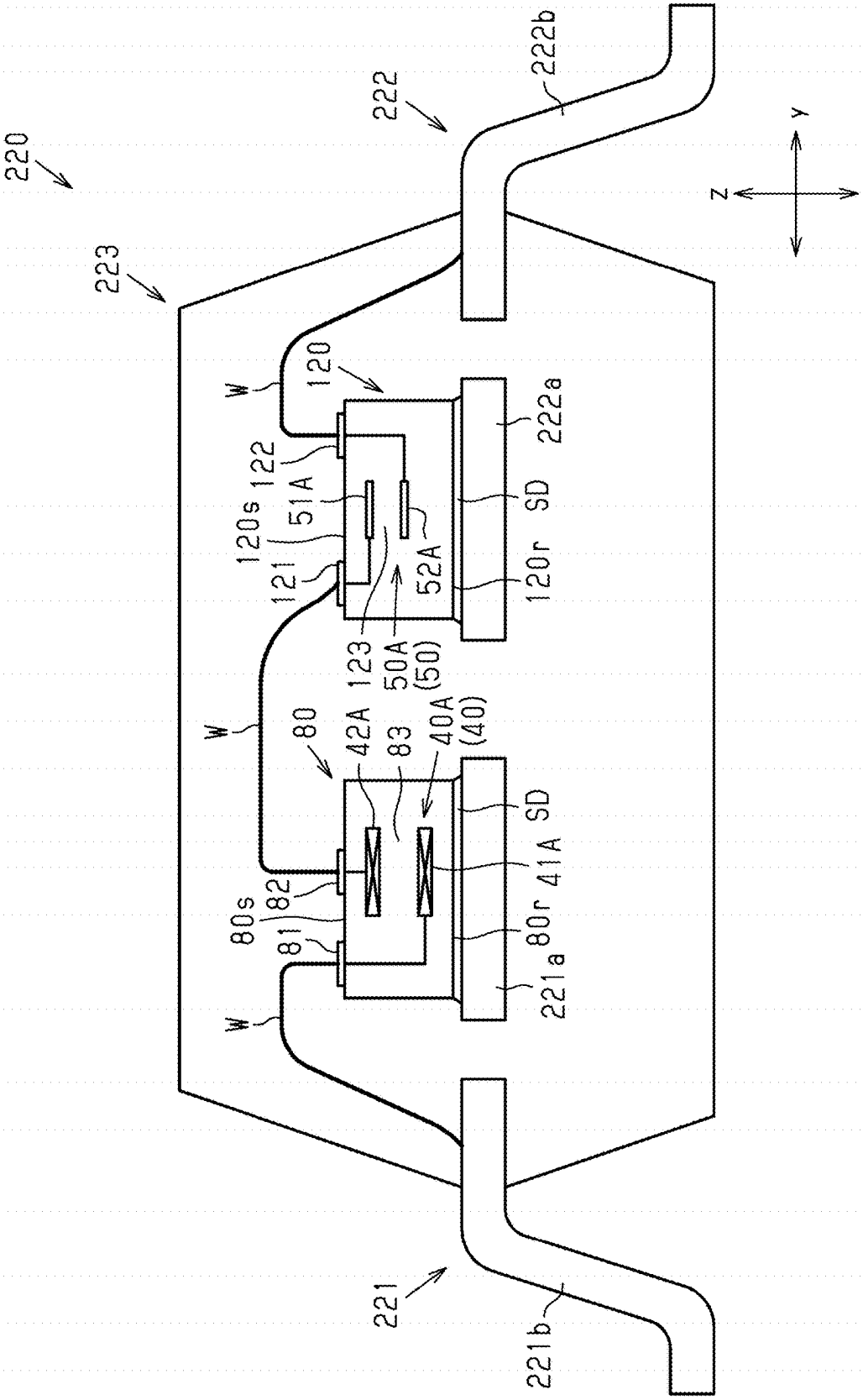
220
223
222
222b
Y
Z
W
120
122
120s
51A
121
123
50A
(50)
52A
120r
SD
222a
80
42A
83
40A
(40)
82
80s
81
41A
80r
221a
221
221b

Fig.13

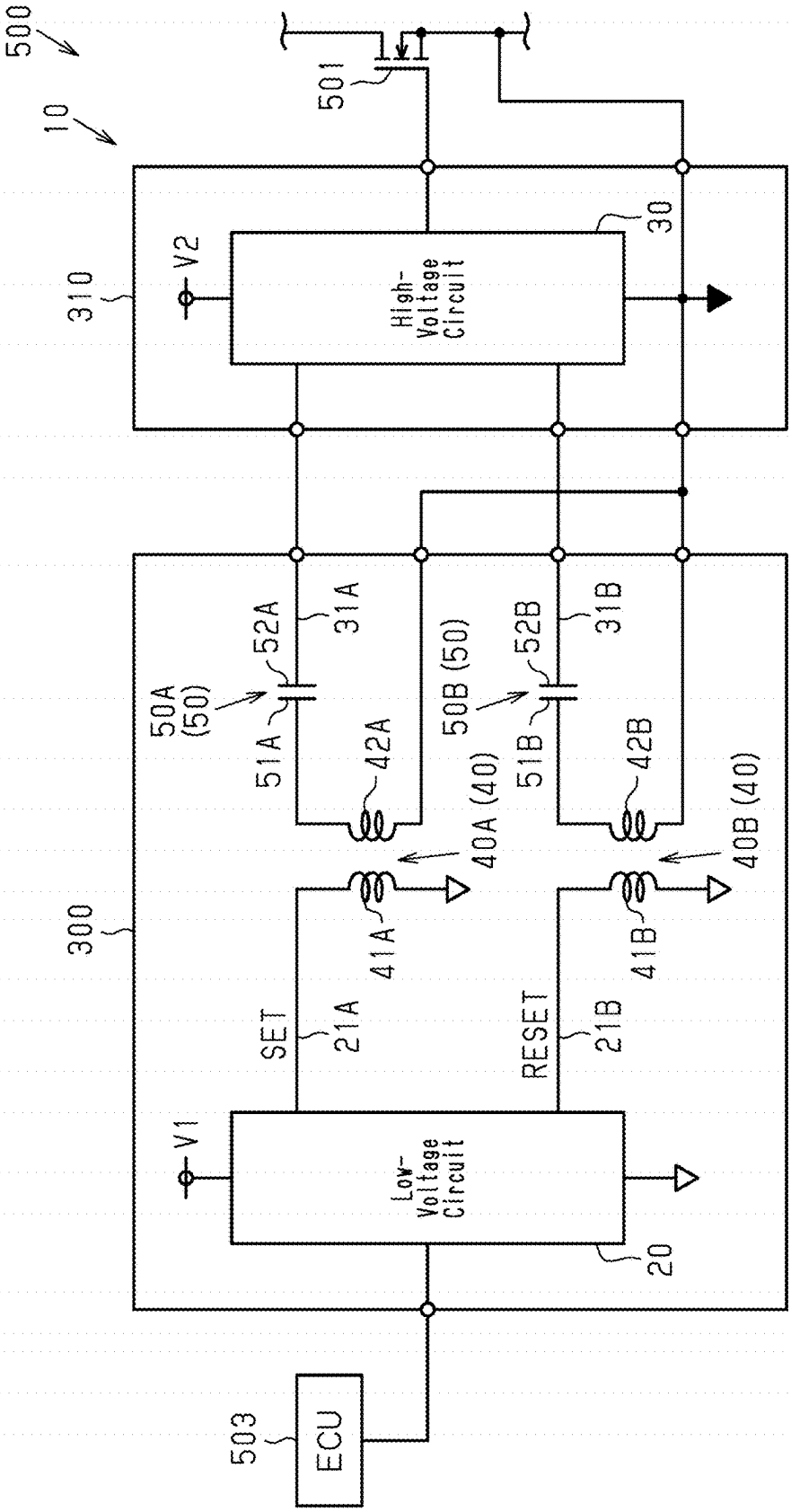
500
10
501
310
V2
High-Voltage Circuit
30
300
50A (50)
52A
31A
51A
42A
40A (40)
50B (50)
52B
31B
51B
42B
40B (40)
41A
41B
SET
21A
RESET
21B
V1
Low-Voltage Circuit
20
503
ECU

Fig.14

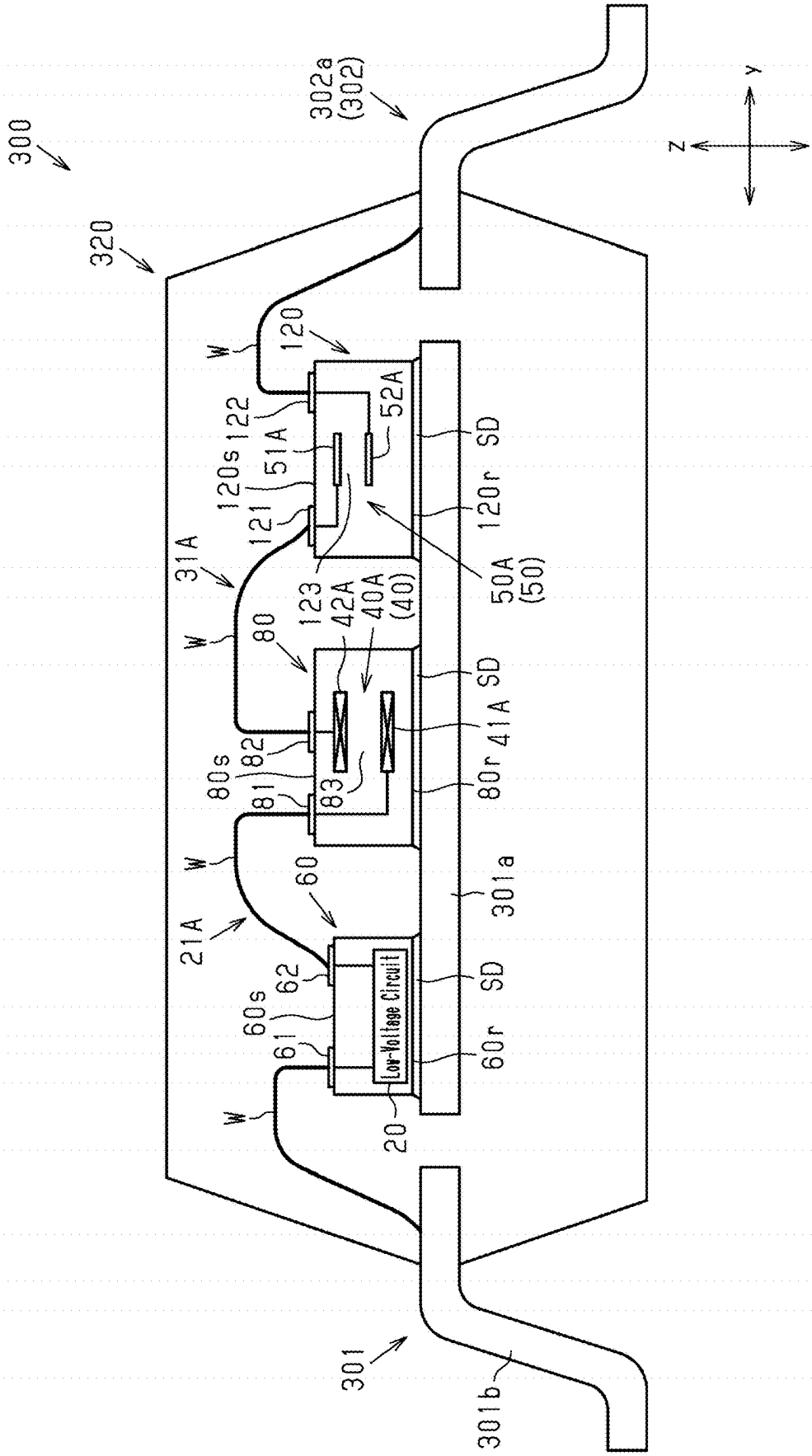
300
302a
(302)
320
120
W
122
52A
120s
51A
121
SD
120r
31A
123
50A
(50)
42A
40A
(40)
80
W
SD
41A
82
80s
81
83
80r
W
60
301a
21A
62
60s
61
Low-Voltage Circuit
SD
60r
W
20
301
301b
Z
Y

Fig.15

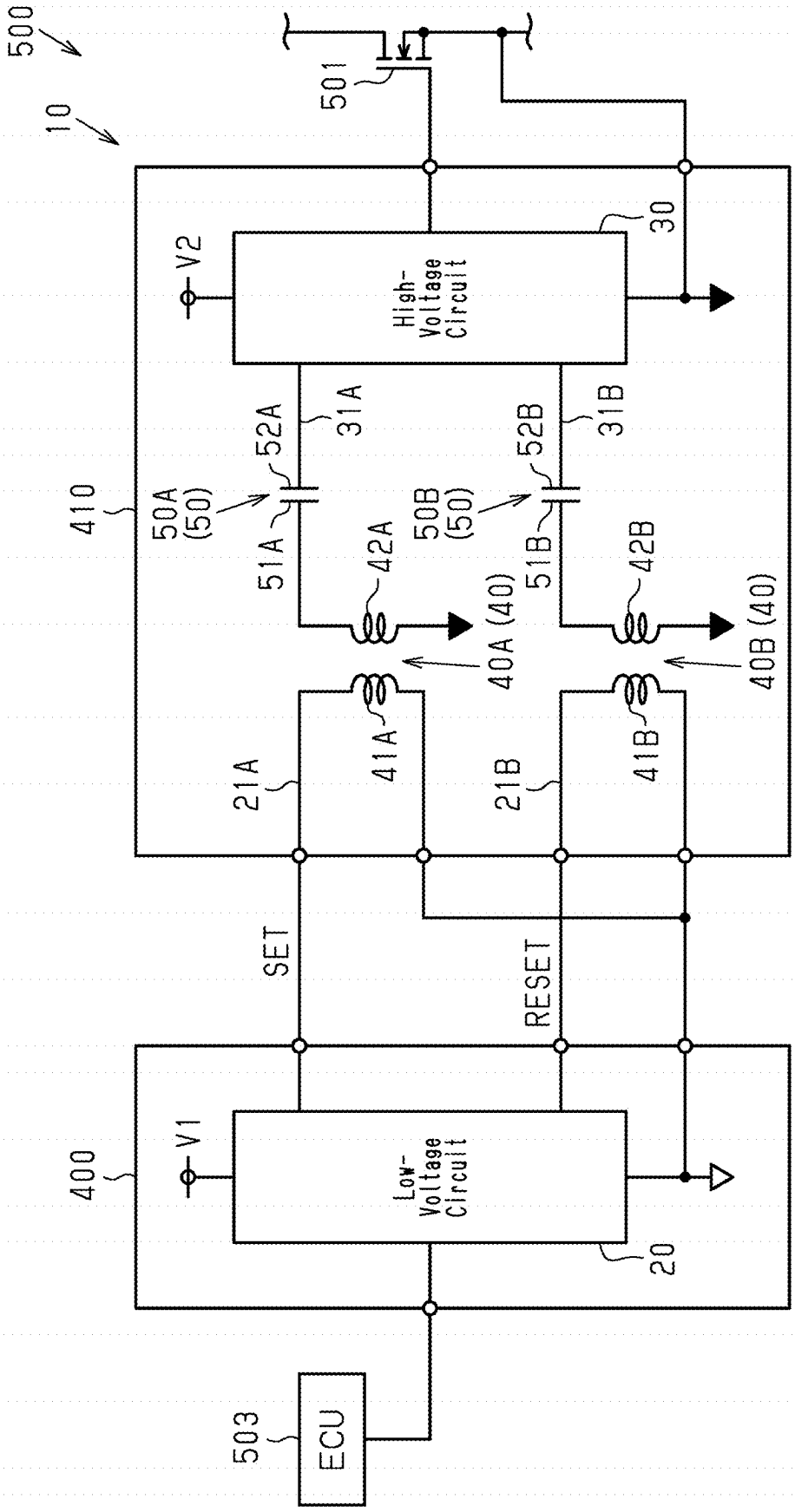
500
10
501
V2
High-Voltage Circuit
30
410
52A
31A
52B
31B
50A (50)
50B (50)
51A
51B
42A
42B
40A (40)
40B (40)
21A
41A
21B
41B
SET
RESET
400
V1
Low-Voltage Circuit
20
503
ECU

Fig.16

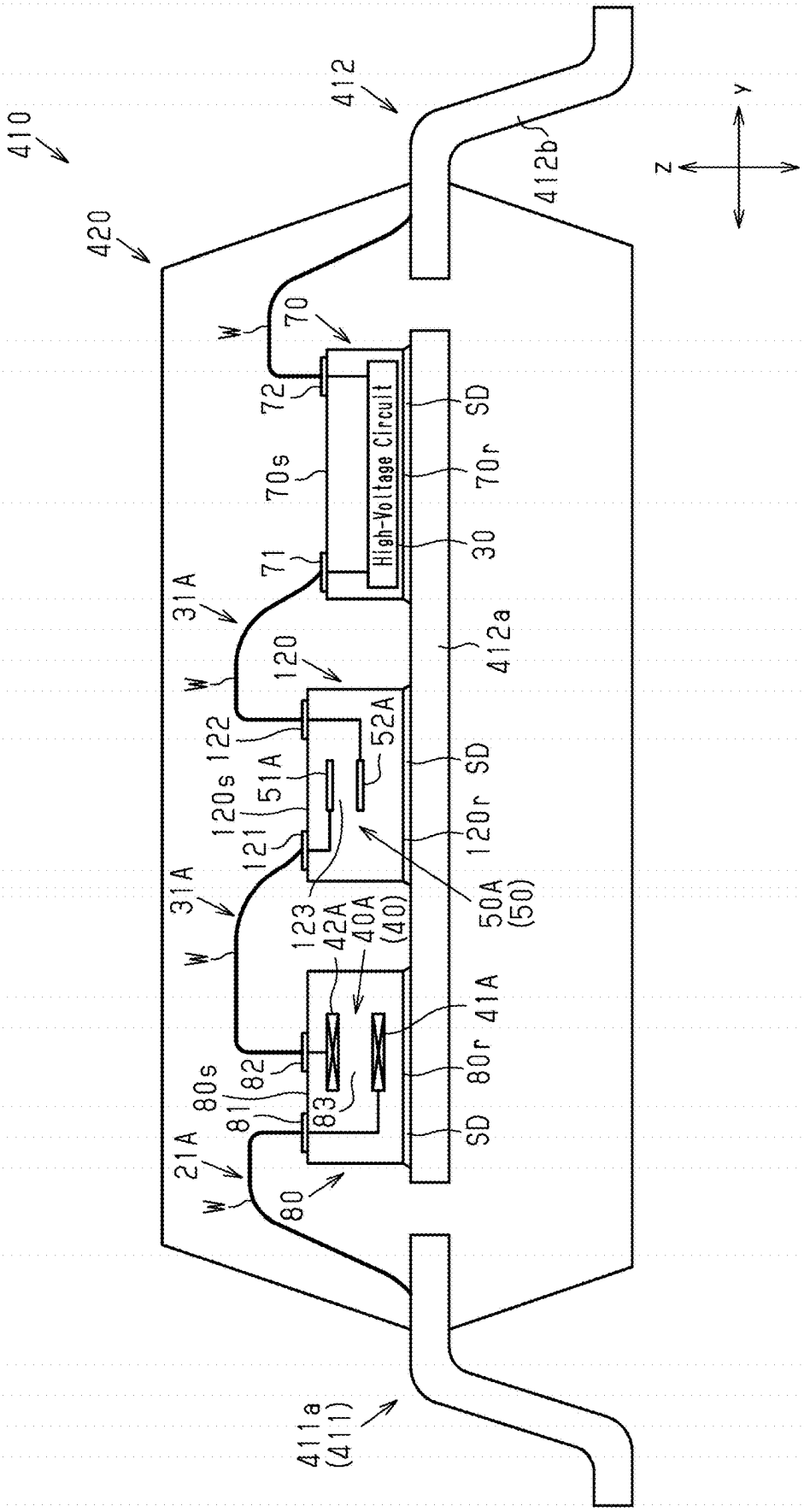
410
420
412
412b
Z
Y
70
72
70s
71
High-Voltage Circuit
SD
70r
30
412a
31A
120
122
120s
51A
121
52A
SD
120r
50A
(50)
123
42A
40A
(40)
41A
80r
SD
80s
82
81
83
21A
80
411a
(411)

Fig.17

Fig.18

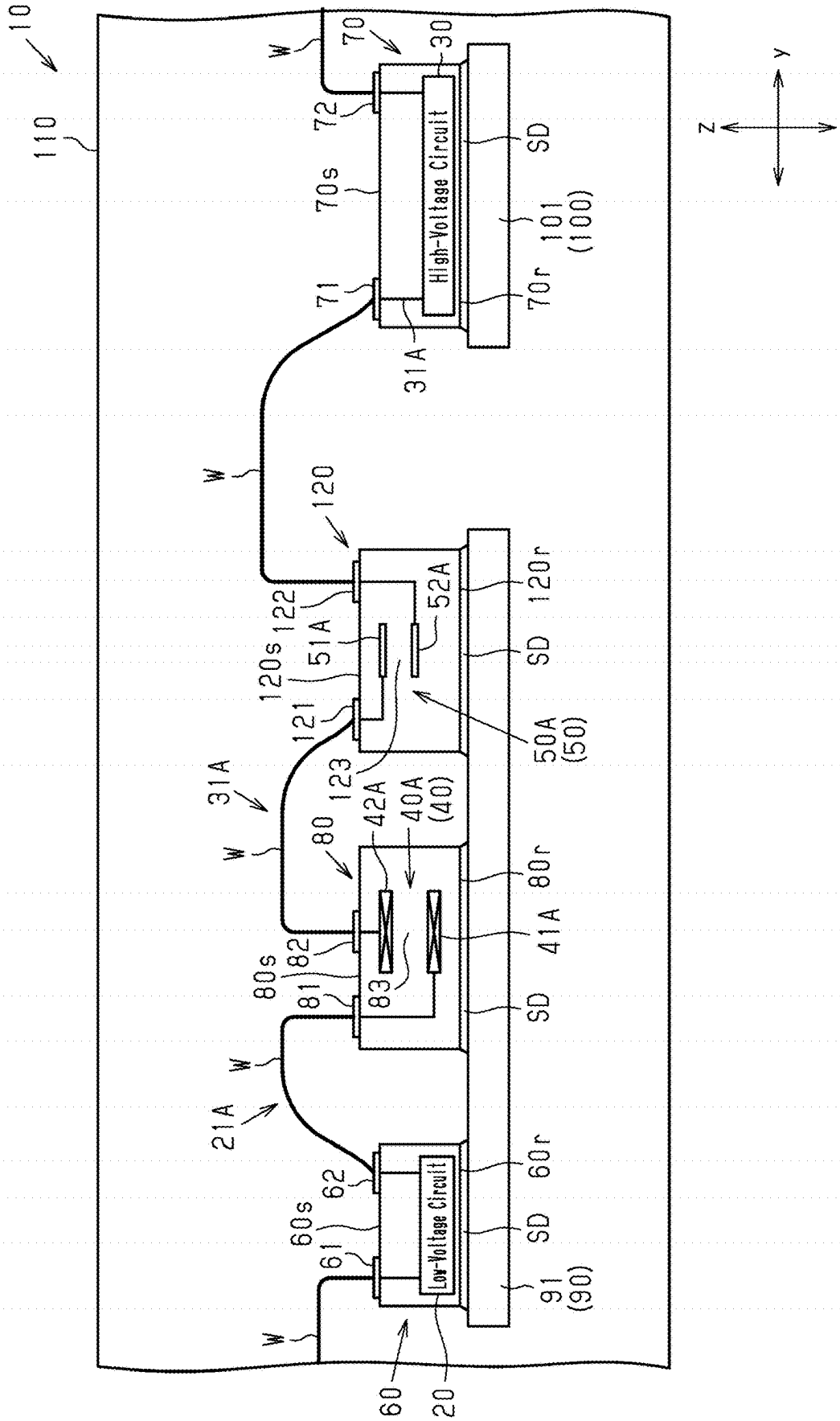
10
110
W
70
30
72
70s
71
31A
High-Voltage Circuit
SD
101
(100)
70r
120
122
120s
121
123
51A
52A
120r
50A
(50)
31A
80
42A
40A
(40)
80r
41A
82
80s
81
83
21A
62
60s
61
Low-Voltage Circuit
60r
91
(90)
60
20
z
y

Fig.19

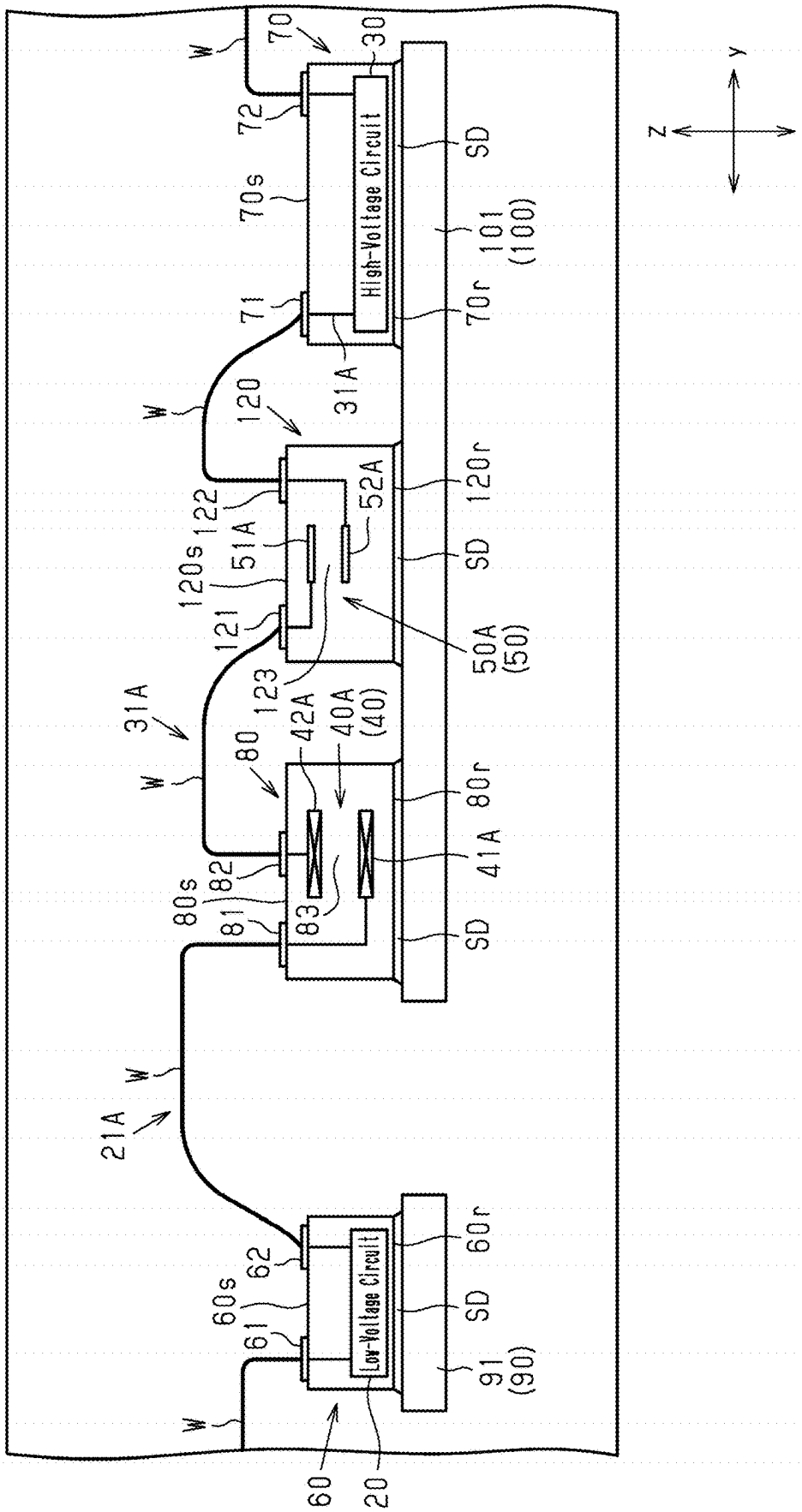
High-Voltage Circuit
Low-Voltage Circuit
W
70
30
72
70s
71
31A
SD
101
(100)
70r
120
122
120s
121
123
51A
52A
120r
50A
(50)
80
42A
40A
(40)
80r
41A
82
80s
81
83
21A
60s
61
62
60r
91
(90)
60
20
z
y

Fig.20

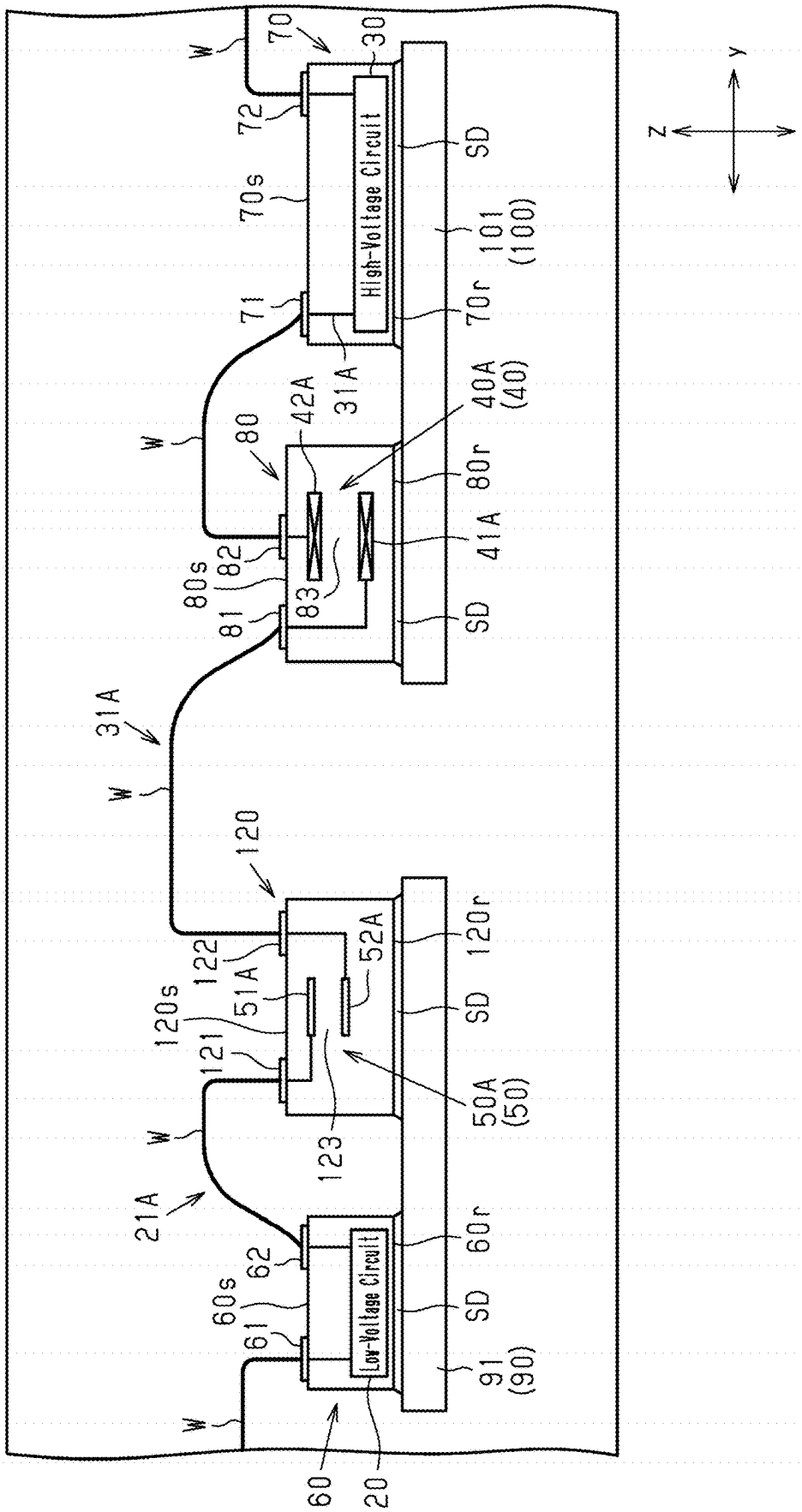
W
70
30
72
70s
High-Voltage Circuit
SD
101
(100)
71
70r
31A
42A
40A
(40)
80
80r
41A
82
80s
83
81
SD
31A
120
122
52A
120r
51A
120s
121
SD
50A
(50)
123
21A
62
60r
60s
61
Low-Voltage Circuit
SD
91
(90)
60
20
Z
Y

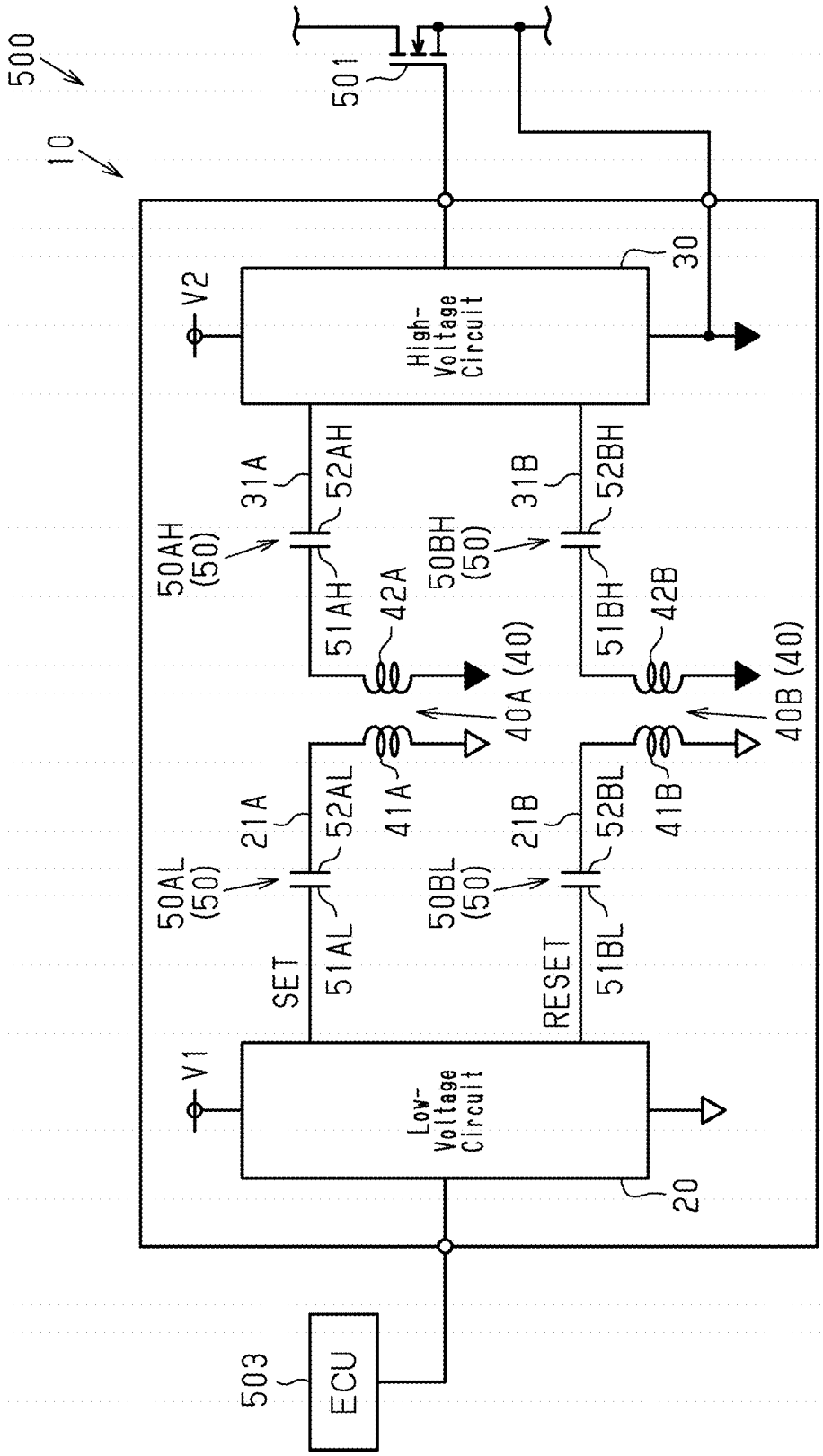
500
10
501
V2
High-Voltage Circuit
30
31A
52AH
50AH (50)
51AH
42A
40A (40)
31B
52BH
50BH (50)
51BH
42B
40B (40)
21A
52AL
41A
50AL (50)
51AL
SET
21B
52BL
41B
50BL (50)
51BL
RESET
V1
Low-Voltage Circuit
20
503
ECU

Fig.21

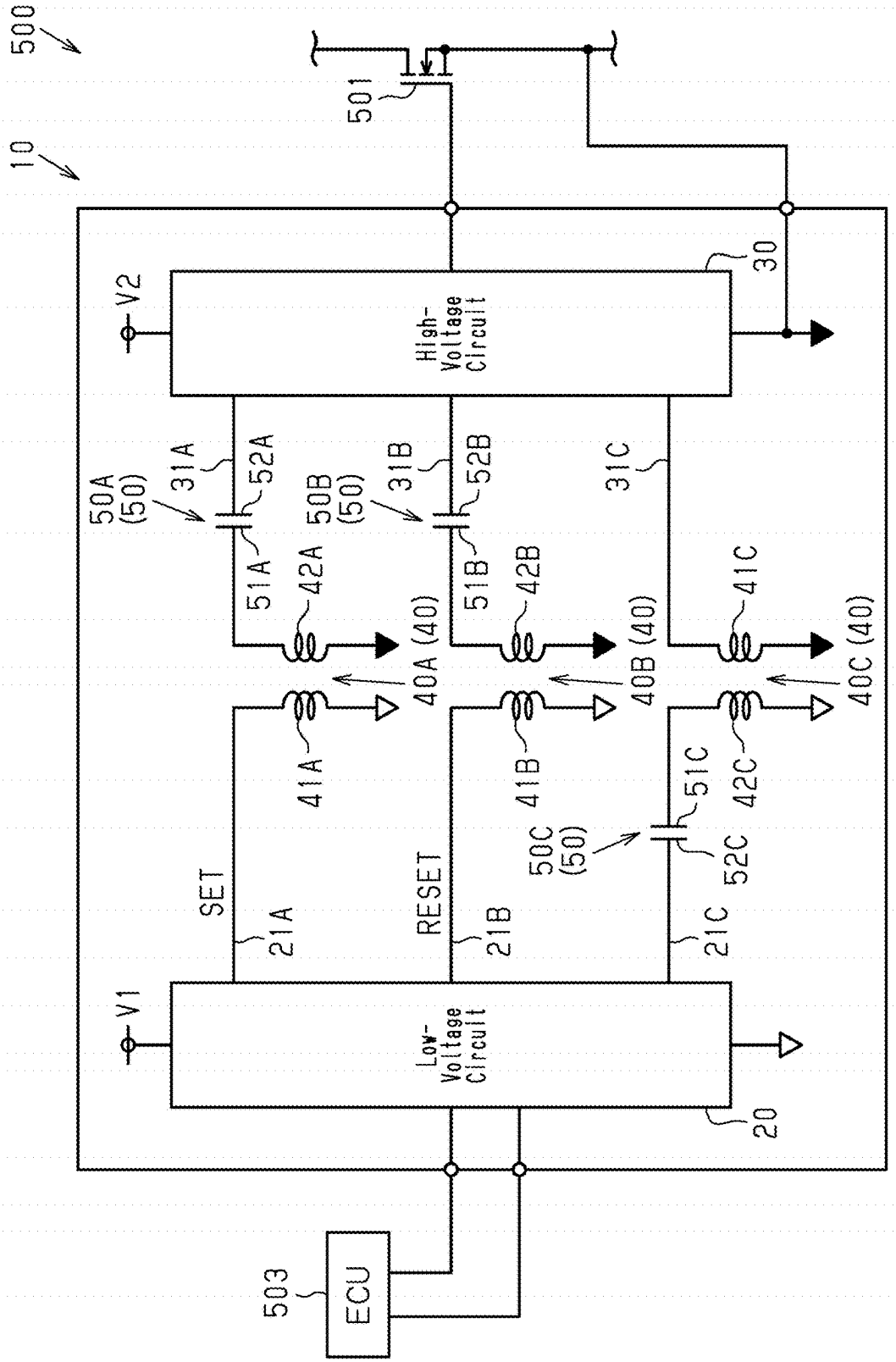
500
10
501
V2
High-Voltage Circuit
30
50A (50)
31A
52A
50B (50)
31B
52B
31C
51A
42A
51B
42B
41C
40A (40)
40B (40)
40C (40)
41A
41B
51C
42C
50C (50)
52C
SET
RESET
21A
21B
21C
V1
Low-Voltage Circuit
20
503
ECU

Fig.22

GATE DRIVER, INSULATION MODULE, LOW-VOLTAGE CIRCUIT UNIT, AND HIGH-VOLTAGE CIRCUIT UNIT

CROSS-REFERENCE TO RELATED APPLICATIONS

This is a continuation application (CA) of PCT Application No. PCT/JP2022/002654, filed on Jan. 25, 2022, which claims priority to Japanese Patent Application No. 2021-015944, filed on Feb. 3, 2021, the entire contents of each of which are incorporated herein by reference.

BACKGROUND

1. Field

The present disclosure relates to a gate driver, an insulation module, a low-voltage circuit unit, and a high-voltage circuit unit.

2. Description of Related Art

An example of a gate driver that drives a switching element such as a transistor is an insulated gate driver, which is known in the art. Japanese Laid-Open Patent Publication No. 2013-51547 describes an example of a semiconductor integrated circuit that is used as an insulated gate driver including a transformer. The transformer includes a first coil at the primary side and a second coil at the secondary side.

BRIEF DESCRIPTION OF DRAWINGS

FIG. **1** is a schematic circuit diagram showing a first embodiment of a gate driver.

FIG. **2** is a plan view showing an internal structure of the gate driver of the first embodiment.

FIG. **3** is a schematic cross-sectional view showing a part of the cross-sectional structure taken along line **3-3** in FIG. **2**.

FIG. **4** is a plan view showing an internal structure of a second embodiment of a gate driver.

FIG. **5** is a schematic cross-sectional view showing a part of the cross-sectional structure taken along line **5-5** in FIG. **4**.

FIG. **6** is a schematic circuit diagram showing a third embodiment of a gate driver.

FIG. **7** is a schematic cross-sectional view showing the gate driver of the third embodiment.

FIG. **8** is a plan view showing an internal structure of a fourth embodiment of a gate driver.

FIG. **9** is a schematic cross-sectional view showing a part of the cross-sectional structure taken along line **9-9** in FIG. **8**.

FIG. **10** is a schematic circuit diagram showing a fifth embodiment of a gate driver.

FIG. **11** is a schematic cross-sectional view showing the gate driver of the fifth embodiment.

FIG. **12** is a schematic circuit diagram showing a sixth embodiment of a gate driver.

FIG. **13** is a schematic cross-sectional view showing an insulation module of the sixth embodiment.

FIG. **14** is a schematic circuit diagram showing a seventh embodiment of a gate driver.

FIG. **15** is a schematic cross-sectional view showing a low-voltage circuit unit of the seventh embodiment.

FIG. **16** is a schematic circuit diagram showing an eighth embodiment of a gate driver.

FIG. **17** is a schematic cross-sectional view showing a high-voltage circuit unit of the eighth embodiment.

FIG. **18** is a schematic cross-sectional view showing a modified example of a gate driver.

FIG. **19** is a schematic cross-sectional view showing a modified example of a gate driver.

FIG. **20** is a schematic cross-sectional view showing a modified example of a gate driver.

FIG. **21** is a schematic circuit diagram showing a modified example of a gate driver.

FIG. **22** is a schematic circuit diagram showing a modified example of a gate driver.

DETAILED DESCRIPTION

Embodiments of a gate driver will be described below with reference to the drawings. The embodiments described below exemplify configurations and methods for embodying a technical concept and are not intended to limit the material, shape, structure, layout, dimensions, and the like of each component to those described below.

First Embodiment

A first embodiment of a gate driver **10** will be described with reference to FIGS. **1** to **3**. FIG. **1** schematically shows an example of a circuit configuration of the gate driver **10**.

As shown in FIG. **1**, the gate driver **10** is configured to apply a drive voltage signal to the gate of a switching element. In an example, the gate driver **10** is used in an inverter device **500** mounted on an electric vehicle or a hybrid electric vehicle. The inverter device **500** includes two switching elements **501** and **502** connected in series to each other, the gate driver **10**, and an ECU **503** that controls the gate driver **10**. In an example, the switching element **501** is a high-side switching element connected to a drive power supply. The switching element **502** is a low-side switching element. Examples of the switching elements **501** and **502** include transistors such as a Si MOSFET, a SiC MOSFET, and an IGBT. The gate driver **10** of the first embodiment applies a drive voltage signal to the gate of the switching element **501**. In the description hereafter, MOSFETs are used in the switching elements **501** and **502**.

The gate driver **10** is provided for each of the switching elements **501** and **502** and separately drives the switching elements **501** and **502**. In the first embodiment, the gate driver **10** that drives the switching element **501** will be described for the sake of brevity.

The gate driver **10** includes a low-voltage circuit **20** to which a first voltage V**1** is applied, a high-voltage circuit **30** to which a second voltage V**2** is applied, a transformer **40**, and a capacitor **50**. The second voltage V**2** is higher than the first voltage V**1**. The first voltage V**1** and the second voltage V**2** are direct current voltages.

The gate driver **10** of the first embodiment is configured, based on a control signal from the ECU **503**, which is an external control device, to transmit a signal from the low-voltage circuit **20** to the high-voltage circuit **30** through the transformer **40** and the capacitor **50** and to output a drive voltage signal from the high-voltage circuit **30**. The control signal from the ECU **503** corresponds to an external instruction.

The signal transmitted from the low-voltage circuit **20** toward the high-voltage circuit **30**, that is, a signal output from the low-voltage circuit **20**, is for driving, for example,

the switching element **501**. Examples of the signal include a set signal and a reset signal. The set signal transmits a rising edge of the control signal from the ECU **503**. The reset signal transmits a falling edge of the control signal from the ECU **503**. In other words, the set signal and the reset signal are used to generate a drive voltage signal for the switching element **501**. The set signal and the reset signal correspond to a first signal.

More specifically, the low-voltage circuit **20** is actuated by application of the first voltage V**1**. The low-voltage circuit **20** is electrically connected to the ECU **503** and generates a set signal and a reset signal based on a control signal received from the ECU **503**. In an example, the low-voltage circuit **20** generates the set signal in response to a rising edge of the control signal and generates the reset signal in response to a falling edge of the control signal. The low-voltage circuit **20** transmits the generated set signal and reset signal toward the high-voltage circuit **30**.

The high-voltage circuit **30** is actuated by application of the second voltage V**2**. The high-voltage circuit **30** is electrically connected to the gate of the switching element **501**. Based on the set signal and the reset signal received from the low-voltage circuit **20**, the high-voltage circuit **30** generates a drive voltage signal for driving the switching element **501** and applies the drive voltage signal to the gate of the switching element **501**. In other words, the high-voltage circuit **30** generates a drive voltage signal that is applied to the gate of the switching element **501** based on the first signal output from the low-voltage circuit **20**. More specifically, the high-voltage circuit **30** generates a drive voltage signal for activating the switching element **501** based on the set signal and applies the drive voltage signal to the gate of the switching element **501**. The high-voltage circuit **30** generates a drive voltage signal for deactivating the switching element **501** based on the reset signal and applies the drive voltage signal to the gate of the switching element **501**. Thus, the gate driver **10** controls the activation and deactivation of the switching element **501**.

The high-voltage circuit **30** includes, for example, an R-S flip-flop circuit, into which a set signal and a reset signal are input, and a driver unit. The driver unit generates a drive voltage signal based on an output signal of the R-S flip-flop circuit. However, the high-voltage circuit **30** may have any specific circuit configuration.

The transformer **40** and the capacitor **50** are disposed between the low-voltage circuit **20** and the high-voltage circuit **30**. More specifically, the low-voltage circuit **20** and the high-voltage circuit **30** are electrically connected by the transformer **40** and the capacitor **50**. In the first embodiment, the capacitor **50** is arranged between the transformer **40** and the high-voltage circuit **30** in the circuitry. The transformer **40** and the capacitor **50** are connected in series.

In the gate driver **10** of the first embodiment, the low-voltage circuit **20** and the high-voltage circuit **30** are insulated from each other by the transformer **40** and the capacitor **50**. More specifically, the transformer **40** and the capacitor **50** restrict transmission of a direct current voltage between the low-voltage circuit **20** and the high-voltage circuit **30** while allowing transmission of various signals such as the set signal and the reset signal.

Thus, the state in which the low-voltage circuit **20** and the high-voltage circuit **30** are insulated from each other refers to a state in which transmission of a direct current voltage between the low-voltage circuit **20** and the high-voltage circuit **30** is interrupted, while transmission of a signal between the low-voltage circuit **20** and the high-voltage circuit **30** is allowed.

The insulation voltage of the gate driver **10** is, for example, greater than or equal to 2500 Vrms and less than or equal to 7500 Vrms. In the first embodiment, the insulation voltage of the gate driver **10** is approximately 3750 Vrms. However, the insulation voltage of the gate driver **10** is not limited to these values and may be any specific numerical value.

In the first embodiment, the insulation voltage of the transformer **40** is, for example, greater than or equal to 2500 Vrms and less than or equal to 7500 Vrms. The insulation voltage of the transformer **40** may be greater than or equal to 2500 Vrms and less than or equal to 5700 Vrms. However, the insulation voltage of the transformer **40** is not limited to these values and may be any value.

The insulation voltage of the capacitor **50** is set to be, for example, greater than or equal to the insulation voltage of the transformer **40**. In an example, the insulation voltage of the capacitor **50** is greater than or equal to 200 Vrms and less than or equal to 5700 Vrms and is preferably greater than or equal to 600 Vrms and less than or equal to 5700 Vrms. The range of the insulation voltage of the capacitor **50** indicates that the insulation voltage of the capacitor **50** is not limited to being greater than or equal to the insulation voltage of the transformer **40** and may be less than the insulation voltage of the transformer **40**.

In the first embodiment, the ground of the low-voltage circuit **20** and the ground of the high-voltage circuit **30** are independently arranged. In the description hereafter, the ground potential of the low-voltage circuit **20** is referred to as a first reference potential, and the ground potential of the high-voltage circuit **30** is referred to as a second reference potential. In this case, the first voltage V**1** is a voltage from the first reference potential, and the second voltage V**2** is a voltage from the second reference potential. The first voltage V**1** is, for example, greater than or equal to 4.5 V and less than or equal to 5.5 V. The second voltage V**2** is, for example, greater than or equal to 9 V and less than or equal to 24 V.

The transformer **40** and the capacitor **50** will now be described in detail.

The gate driver **10** of the first embodiment includes two transformers **40** and two capacitors **50** corresponding to the two types of signals transmitted from the low-voltage circuit **20** to the high-voltage circuit **30**. More specifically, the gate driver **10** includes a transformer **40** and a capacitor **50** that are used to transmit a set signal and a transformer **40** and a capacitor **50** that are used to transmit a reset signal.

Hereinafter, for the sake of brevity, the transformer **40** and the capacitor **50** used to transmit a set signal are referred to as a transformer **40**A and a capacitor **50**A. The transformer **40** and the capacitor **50** used to transmit a reset signal are referred to as a transformer **40**B and a capacitor **50**B. In other words, the transformer **40** includes the transformer **40**A and the transformer **40**B. The capacitor **50** includes the capacitor **50**A and the capacitor **50**B.

The gate driver **10** includes a low-voltage signal line **21**A, which connects the low-voltage circuit **20** and the transformer **40**A, and a low-voltage signal line **21**B, which connects the low-voltage circuit **20** and the transformer **40**B. Thus, the set signal transmits through the low-voltage signal line **21**A. The reset signal transmits through the low-voltage signal line **21**B.

The gate driver **10** includes a high-voltage signal line **31**A, which connects the transformer **40**A and the high-voltage circuit **30**, and a high-voltage signal line **31**B, which connects the transformer **40**B and the high-voltage circuit

30. Thus, the set signal transmits through the high-voltage signal line 31A. The reset signal transmits through the high-voltage signal line 31B.

In the first embodiment, the transformer 40A and the capacitor 50A are connected in series by the high-voltage signal line 31A. The capacitor 50A and the high-voltage circuit 30 are connected by the high-voltage signal line 31A. In other words, the transformer 40A and the high-voltage circuit 30 are electrically connected through the capacitor 50A. Also, the transformer 40B and the capacitor 50B are connected in series by the high-voltage signal line 31B. The capacitor 50B and the high-voltage circuit 30 are connected by the high-voltage signal line 31B. In other words, the transformer 40B and the high-voltage circuit 30 are electrically connected through the capacitor 50B.

The set signal output from the low-voltage circuit 20 is transmitted through the transformer 40A and the capacitor 50A to the high-voltage circuit 30. The reset signal output from the low-voltage circuit 20 is transmitted through the transformer 40B and the capacitor 50B to the high-voltage circuit 30.

The transformer 40A includes a first coil 41A and a second coil 42A that is insulated from and configured to be magnetically coupled to the first coil 41A.

The first coil 41A is connected to the low-voltage circuit 20 by the low-voltage signal line 21A and is also connected to the ground of the low-voltage circuit 20. More specifically, the first coil 41A includes a first end electrically connected to the low-voltage circuit 20 and a second end electrically connected to the ground of the low-voltage circuit 20. Thus, the potential of the second end of the first coil 41A equals the first reference potential. The first reference potential is, for example, 0 V.

The second coil 42A is connected to the high-voltage circuit 30 by the high-voltage signal line 31A and is also connected to the ground of the high-voltage circuit 30. More specifically, the second coil 42A includes a first end electrically connected to the high-voltage circuit 30 and a second end electrically connected to the ground of the high-voltage circuit 30. Thus, the potential of the second end of the second coil 42A equals the second reference potential.

The ground of the high-voltage circuit 30 is connected to the source of the switching element 501. Thus, the second reference potential fluctuates as the inverter device 500 is driven and may become, for example, greater than or equal to 600 V.

The capacitor 50A includes a first electrode 51A and a second electrode 52A that are insulated. The first electrode 51A is electrically connected to the transformer 40A. The second electrode 52A is electrically connected to the high-voltage circuit 30. More specifically, the first electrode 51A is connected to the second coil 42A by the high-voltage signal line 31A. The second electrode 52A is connected to the high-voltage circuit 30 by the high-voltage signal line 31A.

The transformer 40B includes a first coil 41B, which is electrically connected to the low-voltage circuit 20 by the low-voltage signal line 21B, and a second coil 42B, which is insulated from and configured to be magnetically coupled to the first coil 41B. The second coil 42B is electrically connected to the high-voltage circuit 30 through the capacitor 50B.

The capacitor 50B includes a first electrode 51B and a second electrode 52B that are insulated. The first electrode 51B is electrically connected to the transformer 40B. The second electrode 52B is electrically connected to the high-voltage circuit 30. The transformer 40B and the capacitor 50B are the same as the transformer 40A and the capacitor 50A and thus will not be described in detail.

The structure of the gate driver 10 will now be described with reference to FIGS. 2 and 3. FIG. 2 shows an example of a plan view showing the internal structure of the gate driver 10. FIG. 3 shows a cross-sectional view taken along line 3-3 in FIG. 2.

Since FIG. 1 shows a simplified circuit configuration of the gate driver 10, the number of external terminals of the gate driver 10 shown in FIG. 2 is greater than the number of external terminals of the gate driver 10 shown in FIG. 1. The number of external terminals of the gate driver 10 is the number of external electrodes configured to connect the gate driver 10 to electronic components arranged outside the gate driver 10, such as the ECU 503 and the switching element 501 (refer to FIG. 1). The number of signal lines (the number of wires W described later) that transmits a signal from the low-voltage circuit 20 to the high-voltage circuit 30 in the gate driver 10 shown in FIG. 2 is greater than the number of signal lines in the gate driver 10 shown in FIG. 1.

As shown in FIG. 2, the gate driver 10 is a semiconductor device including a plurality of semiconductor chips arranged in a single package and is, for example, mounted on a circuit substrate disposed in the inverter device 500. Each of the switching elements 501 and 502 is mounted on a mount substrate that differs from the circuit substrate. A cooling unit is attached to the mount substrate.

The package type of the gate driver 10 is small outline (SO) and is a small outline package (SOP) in the first embodiment. The gate driver 10 includes a low-voltage circuit chip 60, a high-voltage circuit chip 70, and a transformer chip 80, which are semiconductor chips, a low-voltage lead frame 90 on which the low-voltage circuit chip 60 is mounted, a high-voltage lead frame 100 on which the high-voltage circuit chip 70 is mounted, and an encapsulation resin 110 that encapsulates the chips 60, 70, 80 and a part of the lead frames 90 and 100. In FIG. 2, the encapsulation resin 110 is indicated by double-dashed lines to illustrate the internal structure of the gate driver 10. The package type of the gate driver 10 may be changed in any manner.

The encapsulation resin 110 is formed from an electrically-insulative material and is formed from, for example, a black epoxy resin. The encapsulation resin 110 has the form of a rectangular plate having a thickness-wise direction conforming to the z-direction. The encapsulation resin 110 includes four resin side surfaces 111 to 114. More specifically, the encapsulation resin 110 includes two end surfaces in the x-direction, namely, the resin side surfaces 111 and 112, and two end surfaces in the y-direction, namely, the resin side surfaces 113 and 114. The x-direction and the y-direction are orthogonal to the z-direction. The x-direction and the y-direction are orthogonal to each other. In the description hereafter, a plan view means a view from the z-direction.

The low-voltage lead frame 90 and the high-voltage lead frame 100 are formed from a conductor and, in the first embodiment, are formed from copper (Cu). The lead frames 90 and 100 are disposed to extend from the inside to the outside of the encapsulation resin 110.

The low-voltage lead frame 90 includes a low-voltage die pad 91 disposed in the encapsulation resin 110 and low-voltage leads 92 disposed to extend from the inside to the outside of the encapsulation resin 110. Each low-voltage lead 92 includes an external terminal configured to be electrically connected to an external electronic device such as the ECU 503 (refer to FIG. 1).

The low-voltage circuit chip **60** and the transformer chip **80** are mounted on the low-voltage die pad **91**. In plan view, the low-voltage die pad **91** is disposed so that the center of the low-voltage die pad **91** in the y-direction is located closer to the resin side surface **113** than the center of the encapsulation resin **110** in the y-direction. In the first embodiment, the low-voltage die pad **91** is not exposed from the encapsulation resin **110**. In plan view, the low-voltage die pad **91** is rectangular so that the long sides extend in the x-direction and the short sides extend in the y-direction.

The low-voltage leads **92** are spaced apart from each other in the x-direction. Among the low-voltage leads **92**, the low-voltage leads **92** located at opposite ends in the x-direction are integrated with the low-voltage die pad **91**. Each low-voltage lead **92** partially projects from the resin side surface **113** toward the outside of the encapsulation resin **110**.

The high-voltage lead frame **100** includes a high-voltage die pad **101** disposed in the encapsulation resin **110** and high-voltage leads **102** disposed to extend from the inside to the outside of the encapsulation resin **110**. Each high-voltage lead **102** includes an external terminal configured to be electrically connected to an external electronic device such as the gate of the switching element **501** (refer to FIG. **1**).

The high-voltage circuit chip **70** is mounted on the high-voltage die pad **101**. In plan view, the high-voltage die pad **101** is disposed closer to the resin side surface **114** than the low-voltage die pad **91** in the y-direction. In the first embodiment, the high-voltage die pad **101** is not exposed from the encapsulation resin **110**. In plan view, the high-voltage die pad **101** is rectangular so that the long sides extend in the x-direction and the short sides extend in the y-direction.

The low-voltage die pad **91** and the high-voltage die pad **101** are spaced apart from each other in the y-direction. The y-direction may also be referred to as the arrangement direction of the two die pads **91** and **101**.

The dimensions of the low-voltage die pad **91** and the high-voltage die pad **101** in the y-direction are set in accordance with the size and the number of semiconductor chips that are mounted. In the first embodiment, the low-voltage circuit chip **60** and the transformer chip **80** are mounted on the low-voltage die pad **91**, and the high-voltage circuit chip **70** is mounted on the high-voltage die pad **101**. Hence, the low-voltage die pad **91** is greater than the high-voltage die pad **101** in dimension in the y-direction.

The high-voltage leads **102** are spaced apart from each other in the x-direction. Among the high-voltage leads **102**, two of the high-voltage leads **102** are integrated with the high-voltage die pad **101**. Each high-voltage lead **102** partially projects from the resin side surface **114** toward the outside of the encapsulation resin **110**.

In the first embodiment, the number of the high-voltage leads **102** is the same as the number of the low-voltage leads **92**. As shown in FIG. **2**, the low-voltage leads **92** and the high-voltage leads **102** are arranged in a direction (x-direction) orthogonal to the arrangement direction (y-direction) of the low-voltage die pad **91** and the high-voltage die pad **101**. The number of the high-voltage leads **102** and the number of the low-voltage leads **92** may be changed in any manner.

In the first embodiment, the low-voltage die pad **91** is supported by the two low-voltage leads **92** integrated with the low-voltage die pad **91**, and the high-voltage die pad **101** is supported by the two high-voltage leads **102** integrated with the high-voltage die pad **101**. Thus, the die pads **91** and **101** do not include suspension leads exposed from the resin side surfaces **111** and **112**. This increases the creepage distance between the low-voltage lead frame **90** and the high-voltage lead frame **100**.

The low-voltage circuit chip **60**, the high-voltage circuit chip **70**, and the transformer chip **80** are spaced apart from each other in the y-direction. In other words, in plan view, the low-voltage circuit chip **60**, the high-voltage circuit chip **70**, and the transformer chip **80** are spaced apart from each other in the arrangement direction of the die pads **91** and **101**. In the first embodiment, the low-voltage circuit chip **60**, the transformer chip **80**, and the high-voltage circuit chip **70** are arranged in this order from the resin side surface **113** toward the resin side surface **114** in the y-direction.

Since the leads **92** and **102** are arranged in the x-direction, the x-direction may also be referred to as the arrangement direction of the leads **92** and **102**. The y-direction may also be referred to as a direction orthogonal to the arrangement direction of the leads **92** and **102** in plan view. Thus, in other words, the low-voltage circuit chip **60**, the high-voltage circuit chip **70**, and the transformer chip **80** are spaced apart from each other in the direction orthogonal to the arrangement direction of the leads **92** and **102** in plan view. In plan view, the low-voltage circuit chip **60**, the transformer chip **80**, and the high-voltage circuit chip **70** are arranged in this order from the low-voltage leads **92** toward the high-voltage leads **102**.

The low-voltage circuit chip **60** includes the low-voltage circuit **20** shown in FIG. **1**. In plan view, the low-voltage circuit chip **60** is rectangular and has short sides and long sides. In plan view, the low-voltage circuit chip **60** is mounted on the low-voltage die pad **91** such that the long sides extend in the x-direction and the short sides extend in the y-direction. As shown in FIG. **3**, the low-voltage circuit chip **60** includes a chip main surface **60*s*** and a chip back surface **60*r*** facing in opposite directions in the z-direction. The chip back surface **60*r*** of the low-voltage circuit chip **60** is bonded to the low-voltage die pad **91** by a conductive bonding material SD such as solder or silver (Ag) paste.

As shown in FIG. **2**, first electrode pads **61**, second electrode pads **62**, and third electrode pads **63** are formed on the chip main surface **60*s*** of the low-voltage circuit chip **60**. The electrode pads **61** to **63** are electrically connected to the low-voltage circuit **20** shown in FIG. **1**.

The first electrode pads **61** disposed on the chip main surface **60*s*** are located toward the low-voltage leads **92** from the center, in the y-direction, of the chip main surface **60*s***. The first electrode pads **61** are arranged in the x-direction. The second electrode pads **62** are disposed on one of the opposite ends of the chip main surface **60*s*** in the y-direction located closer to the transformer chip **80**. The second electrode pads **62** are arranged in the x-direction. The third electrode pads **63** are disposed on opposite ends of the chip main surface **60*s*** in the x-direction.

The transformer chip **80** includes the transformer **40** shown in FIG. **1**. In plan view, the transformer chip **80** is rectangular and has short sides and long sides. In the first embodiment, in plan view, the transformer chip **80** is mounted on the low-voltage die pad **91** such that the long sides extend in the x-direction and the short sides extend in the y-direction.

The transformer chip **80** is disposed adjacent to the low-voltage circuit chip **60** in the y-direction. The transformer chip **80** is disposed closer to the high-voltage circuit chip **70** than the low-voltage circuit chip **60**.

As shown in FIG. **3**, the transformer chip **80** includes a chip main surface **80*s*** and a chip back surface **80*r*** facing in opposite directions in the z-direction. The chip back surface

80*r* of the transformer chip **80** is bonded to the low-voltage die pad **91** by the conductive bonding material SD.

As shown in FIG. **2**, first electrode pads **81** and second electrode pads **82** are formed on the chip main surface **80***s* of the transformer chip **80**. The first electrode pads **81** are disposed, for example, on one of the opposite ends of the chip main surface **80***s* in the y-direction located closer to the low-voltage circuit chip **60**. The first electrode pads **81** are arranged in the x-direction. The second electrode pads **82** are disposed near the center of the chip main surface **80***s* in the y-direction. The second electrode pads **82** are arranged in the x-direction.

The lead frames **90** and **100** are located closest to each other at the low-voltage die pad **91** and the high-voltage die pad **101**. Hence, the low-voltage die pad **91** and the high-voltage die pad **101** need to be separated from each other by a predetermined distance or more so that the insulation voltage of the gate driver **10** is set to a predetermined insulation voltage. Hence, in plan view, the distance between the high-voltage circuit chip **70** and the transformer chip **80** is greater than the distance between the low-voltage circuit chip **60** and the transformer chip **80**.

As shown in FIG. **3**, the transformer chip **80** includes the transformers **40**A and **40**B (refer to FIG. **1**). More specifically, the transformers **40**A and **40**B are integrated into one chip. The transformer chip **80** includes an insulation layer **83**. The two coils **41**A and **42**A of the transformer **40**A are embedded in the insulation layer **83** and are spaced apart and opposed to each other in the z-direction with the insulation layer **83** interposed therebetween. The insulation layer **83** may be a single layer or multiple layers.

Each of the coils **41**A and **42**A is formed of a conductive layer embedded in the insulation layer **83**. In the first embodiment, the second coil **42**A is disposed farther from the low-voltage die pad **91** than the first coil **41**A.

The first coil **41**A is electrically connected to the first electrode pad **81**. The second coil **42**A is electrically connected to the second electrode pad **82**. The positional relationship between the two coils **41**A and **42**A may be changed in any manner.

Although not shown, the transformer **40**B and the transformer **40**A have the same structure. Thus, the first coil **41**B of the transformer **40**B is electrically connected to a first electrode pad **81** that differs from the first electrode pad **81** electrically connected to the first coil **41**A. The second coil **42**B is electrically connected to a second electrode pad **82** that differs from the second electrode pad **82** electrically connected to the second coil **42**A.

The high-voltage circuit chip **70** includes the high-voltage circuit **30**. As shown in FIG. **2**, in plan view, the high-voltage circuit chip **70** is rectangular and has short sides and long sides. In plan view, the high-voltage circuit chip **70** is mounted on the high-voltage die pad **101** such that the long sides extend in the x-direction and the short sides extend in the y-direction. As shown in FIG. **3**, the high-voltage circuit chip **70** includes a chip main surface **70***s* and a chip back surface **70***r* facing in opposite directions in the z-direction. The chip back surface **70***r* of the high-voltage circuit chip **70** is bonded to the high-voltage die pad **101** by the conductive bonding material SD.

As shown in FIG. **3**, the capacitors **50**A and **50**B (refer to FIG. **1**) of the first embodiment are incorporated in the high-voltage circuit chip **70**. More specifically, the high-voltage circuit chip **70** includes an insulation layer **74**. The capacitors **50**A and **50**B are embedded in the insulation layer **74**. In the first embodiment, the insulation layer **74** is formed from a dielectric material. The insulation layer **74** is formed from, for example, Sift.

The high-voltage circuit **30** is disposed closer to the chip back surface **70***r* of the high-voltage circuit chip **70** than the insulation layer **74**. In the first embodiment, the capacitor **50**A is disposed in a portion of the high-voltage circuit chip **70** located close to the transformer chip **80** in the y-direction.

In the first embodiment, as shown in FIG. **3**, the capacitor **50**A located toward the chip main surface **70***s* from the high-voltage circuit **30** in the high-voltage circuit chip **70**. In plan view, the capacitor **50**A is disposed to overlap the high-voltage circuit **30**. The position of the capacitor **50**A disposed in the high-voltage circuit chip **70** may be changed in any manner.

The first electrode **51**A and the second electrode **52**A of the capacitor **50**A have the form of flat plates opposed in a direction orthogonal to the z-direction. The first electrode MA and the second electrode **52**A are spaced apart and opposed to each other in the z-direction with the insulation layer **74** disposed therebetween. The insulation layer **74** is disposed between the first electrode **51**A and the second electrode **52**A in the high-voltage circuit chip **70**. In the first embodiment, the first electrode **51**A is disposed closer to the chip main surface **70***s* than the second electrode **52**A. Although not shown, the layout of the capacitor **50**B in the high-voltage circuit chip **70** is the same as that of the capacitor **50**A. Thus, the second electrodes **52**A and **52**B of the capacitors **50**A and **50**B are electrically connected to the high-voltage circuit **30** in the high-voltage circuit chip **70**. That is, the capacitors **50**A and **50**B are electrically connected to the high-voltage circuit **30** in the high-voltage circuit chip **70**.

As shown in FIG. **2**, first electrode pads **71**, second electrode pads **72**, and third electrode pads **73** are formed on the chip main surface **70***s* of the high-voltage circuit chip **70**. The first electrode pads **71** are disposed on one of the opposite ends of the chip main surface **70***s* in the y-direction located closer to the transformer chip **80**. The first electrode pads **71** are arranged in the x-direction. The second electrode pads **72** are disposed on one of the opposite ends of the chip main surface **70***s* in the y-direction located farther from the transformer chip **80**. The second electrode pads **72** are arranged in the x-direction. The third electrode pads **73** are disposed on opposite ends of the chip main surface **70***s* in the x-direction.

The first electrode pads **71** are electrically connected to the capacitors **50**A and **50**B (refer to FIG. **1**). More specifically, some of the first electrode pads **71** are electrically connected to the first electrode **51**A (refer to FIG. **1**) of the capacitors **50**A. Others of the first electrode pads **71** are electrically connected to the first electrode MB (refer to FIG. **1**) of the capacitor **50**B. The second electrode pads **72** and the third electrode pads **73** are electrically connected to the high-voltage circuit **30** (refer to FIG. **1**).

Wires W are connected to each of the low-voltage circuit chip **60**, the transformer chip **80**, and the high-voltage circuit chip **70**. Each of the wires W is a bonding wire formed with a wire bonder from a conductor such as gold (Au), aluminum (Al), or Cu.

The low-voltage circuit chip **60** is electrically connected to the low-voltage lead frame **90** by the wires W. More specifically, the first electrode pads **61** of the low-voltage circuit chip **60** are connected to the low-voltage leads **92** by the wires W. The third electrode pads **63** of the low-voltage circuit chip **60** are connected by the wires W to the two of the low-voltage leads **92** integrated with the low-voltage die

pad **91**. Thus, the low-voltage circuit **20** (refer to FIG. **1**) is electrically connected to the low-voltage leads **92** (external electrodes of the gate driver **10** that are electrically connected to the ECU **503**). In the first embodiment, the two low-voltage leads **92** integrated with the low-voltage die pad **91** include a ground terminal, and the wires W electrically connect the low-voltage circuit **20** to the low-voltage die pad **91**. Thus, the low-voltage die pad **91** has the same potential as the ground of the low-voltage circuit **20**.

The low-voltage circuit chip **60** and the transformer chip **80** are electrically connected by the wires W. More specifically, the second electrode pads **62** of the low-voltage circuit chip **60** and the first electrode pads **81** of the transformer chip **80** are connected by the wires W. Thus, the low-voltage circuit **20** is electrically connected to the first coils **41**A and **41**B of the transformers **40**A and **40**B (refer to FIG. **1**).

The first coils **41**A and **41**B are electrically connected to the low-voltage die pad **91** by the first electrode pads **81**, the wires W connecting the transformer chip **80** to the low-voltage circuit chip **60**, the second electrode pads **62**, the low-voltage circuit **20**, the third electrode pads **63**, and the wires W connected to the third electrode pads **63**. Thus, the first coils **41**A and **41**B of the transformers **40**A and **40**B are electrically connected to the ground of the low-voltage circuit **20**.

The transformer chip **80** and the high-voltage circuit chip **70** are electrically connected by the wires W. More specifically, the second electrode pads **82** of the transformer chip **80** and the first electrode pads **71** of the high-voltage circuit chip **70** are connected by the wires W. Thus, the second coil **42**A of the transformer **40**A is electrically connected to the first electrode **51**A of the capacitor **50**A (refer to FIG. **1**), and the second coil **42**B of the transformer **40**B is electrically connected to the first electrode **51**B of the capacitor **50**B (refer to FIG. **1**).

In the first embodiment, the second electrode **52**A of the capacitor **50**A is electrically connected to the high-voltage circuit **30** in the high-voltage circuit chip **70**. Thus, the high-voltage circuit chip **70** incorporates a portion of the high-voltage signal line **31**A that connects the second electrode **52**A and the high-voltage circuit **30**. The same applies to the high-voltage signal line **31**B.

The high-voltage circuit chip **70** and the high-voltage leads **102** of the high-voltage lead frame **100** are electrically connected by wires W. More specifically, the second electrode pads **72** and the third electrode pads **73** of the high-voltage circuit chip **70** are connected to the high-voltage leads **102** by the wires W. Thus, the high-voltage circuit **30** is electrically connected to the high-voltage leads **102** (external electrodes of the gate driver **10** that are electrically connected to the inverter device **500** such as the switching element **501**). In the first embodiment, the two high-voltage leads **102** integrated with the high-voltage die pad **101** include ground terminals, and the wires W electrically connect the high-voltage circuit **30** and the high-voltage die pad **101**. Thus, the high-voltage die pad **101** has the same potential as the ground of the high-voltage circuit **30**.

The second coils **42**A and **42**B (refer to FIG. **1**) of the transformers **40**A and **40**B are electrically connected to the ground of the high-voltage circuit **30**. More specifically, the coils **42**A and **42**B are electrically connected to the high-voltage die pad **101** by the second electrode pads **82**, the wires W connecting the transformer chip **80** to the high-voltage circuit chip **70**, the first electrode pads **71**, the high-voltage circuit **30**, the third electrode pads **73**, and the wires W that are connected to the third electrode pads **73** and to the high-voltage leads **102** integrated with the high-voltage die pad **101**.

The operation of the gate driver **10** according to the first embodiment will now be described.

In the gate driver **10** of the first embodiment, the ground potential of the high-voltage circuit **30** may become higher than the ground potential of the low-voltage circuit **20**. In this case, a current may flow from the ground of the high-voltage circuit **30** toward the ground of the low-voltage circuit **20**. The transformer **40** having an insulation structure is disposed between the low-voltage circuit **20** and the high-voltage circuit **30** to inhibit the current flowing from the high-voltage circuit **30** to the low-voltage circuit **20**.

When a voltage higher than the insulation voltage of the transformer **40** is applied, dielectric breakdown, which is an anomaly in the first coil **41**A (**41**B) and the second coil **42**A (**42**B) forming a short circuit, may occur. In this case, even when dielectric breakdown occurs in the transformer **40** due to a short circuit of the first coil **41**A (**41**B) and the second coil **42**A (**42**B), insulation between the low-voltage circuit **20** and the high-voltage circuit **30** will be maintained by the capacitor **50**, which is connected in series to the transformer **40**. That is, the capacitor **50** is an additional insulation to the transformer **40**, which is a base insulation.

The gate driver **10** of the first embodiment obtains the following advantages.

(1-1) The gate driver **10** includes the low-voltage circuit **20** to which the first voltage V**1** is applied, the high-voltage circuit **30** to which the second voltage V**1** higher than the first voltage V**2** is applied, the transformer **40** including the first coils **41**A and **41**B and the second coils **42**A and **42**B opposed to each other with the insulation layer **83** interposed therebetween, and the capacitor **50** connected in series to the transformer **40**. The low-voltage circuit **20** and the high-voltage circuit **30** transmit signals through the transformer **40** and the capacitor **50**.

With this structure, the low-voltage circuit **20** and the high-voltage circuit **30** are insulated by the transformer **40** and the capacitor **50**, which is connected in series to the transformer **40**. Thus, even when dielectric breakdown occurs in the transformer **40** due to a short circuit between the first coil **41**A (**41**B) and the second coil **42**A (**42**B), the capacitor **50** maintains the insulation between the low-voltage circuit **20** and the high-voltage circuit **30**. This improves safety.

(1-2) The capacitor **50**A includes the first electrode **51**A and the second electrode **52**A. The first electrode **51**A is electrically connected to the transformer **40**A, and the second electrode **52**A is electrically connected to the high-voltage circuit **30**. The capacitor **50**B includes the first electrode **51**B and the second electrode **52**B. The first electrode **51**B is electrically connected to the transformer **40**B, and the second electrode **52**B is electrically connected to the high-voltage circuit **30**. With this structure, when a dielectric breakdown occurs in the transformer **40**A due to a short circuit between the first coil **41**A and the second coil **42**A, the capacitor **50**A insulates the side toward the high-voltage circuit **30** from the transformer **40**A. When a dielectric breakdown occurs in the transformer **40**B due to a short circuit between the first coil **41**B and the second coil **42**B, the capacitor **50**B insulates the side toward the high-voltage circuit **30** from the transformer **40**B. This, for example, inhibits application of a high voltage, such as the drain voltage of the switching element **501**, to the low-voltage lead frame **90** caused by the dielectric breakdown of the transformers **40**A and **40**B.

(1-3) The gate driver **10** includes the low-voltage circuit chip **60** including the low-voltage circuit **20**, the high-voltage circuit chip **70** including the high-voltage circuit **30**, and the transformer chip **80** including the transformers **40**A and **40**B. With this structure, the transformer chip **80** is disposed separately from the low-voltage circuit chip **60** and the high-voltage circuit chip **70**. This allows the low-voltage circuit chip **60** and the high-voltage circuit chips **70** to use the common transformer chip **80**. This reduces the costs for manufacturing different types of gate drivers that differ in at least one of the low-voltage circuit chip **60** and the high-voltage circuit chip **70**.

(1-4) The capacitors **50**A and **50**B are incorporated in the high-voltage circuit chip **70**. With this structure, the number of chips in the gate driver **10** is reduced as compared with a structure in which the capacitors **50**A and **50**B are separate chips. This allows enlargement of the gate driver **10** to be limited.

In addition, since the high-voltage circuit chip **70** is mounted on the high-voltage die pad **101**, even when dielectric breakdown occurs in the transformer **40** due to a short circuit between the first coil **41**A (**41**B) and the second coil **42**A (**42**B), the high voltage is less likely to reach the low-voltage lead frame **90**. Thus, application of the high voltage to the low-voltage lead frame **90** is limited.

(1-5) In the high-voltage circuit chip **70**, the capacitors **50**A and **50**B are disposed to overlap the high-voltage circuit **30** in plan view. This structure allows enlargement of the high-voltage circuit chip **70** to be limited.

(1-6) The capacitors **50**A and **50**B are disposed in the high-voltage circuit chip **70** near the transformer chip **80**. This structure shortens a conductive path between the transformer **40**A and the capacitor **50**A and a conductive path between the transformer **40**B and the capacitor **50**B. As a result, inductance caused by the length of the conductive paths is reduced.

(1-7) The transformer chip **80** is disposed between the low-voltage circuit chip **60** and the high-voltage circuit chip **70**. With this structure, when adjacent ones of the chips **60**, **70**, and **80** in the arrangement direction (y-direction) of the chips **60**, **70**, and **80** are electrically connected to each other by wires W, the wires W do not need to extend over a predetermined chip. Thus, the connection structure of the wires W is simplified.

(1-8) The insulation voltage of the capacitor **50** is set to be greater than or equal to the insulation voltage of the transformer **40**. With this structure, even when dielectric breakdown occurs in the transformer **40** due to a short circuit between the first coil **41**A (**41**B) and the second coil **42**A (**42**B), insulation between the low-voltage circuit **20** and the high-voltage circuit **30** is maintained without stopping the driving of the inverter device **500**.

Second Embodiment

A second embodiment of a gate driver **10** will be described with reference to FIGS. **4** and **5**. The gate driver **10** of the second embodiment differs from the gate driver **10** of the first embodiment mainly in that the capacitor **50** is not incorporated in the high-voltage circuit chip **70** and a capacitor chip **120** is included as a separate semiconductor chip. In the following description, the differences from the gate driver **10** of the first embodiment will be mainly described. The same reference characters are given to those components that are the same as the corresponding components of the gate driver **10** of the first embodiment. Such components will not be described in detail. In FIG. **4**, the encapsulation resin **110** is indicated by double-dashed lines to illustrate the internal structure of the gate driver **10**.

As shown in FIG. **4**, the gate driver **10** includes the low-voltage circuit chip **60**, the high-voltage circuit chip **70**, the transformer chip **80**, and a capacitor chip **120**. The chips **60**, **70**, **80**, and **120** are encapsulated by the encapsulation resin **110**. The low-voltage circuit chip **60**, the high-voltage circuit chip **70**, the transformer chip **80**, and the capacitor chip **120** are spaced apart from each other in the y-direction. In other words, the chips **60**, **70**, **80**, and **120** are arranged in the arrangement direction of the low-voltage die pad **91** and the high-voltage die pad **101**.

In the second embodiment, the low-voltage circuit chip **60**, the transformer chip **80**, the capacitor chip **120**, and the high-voltage circuit chip **70** are arranged in this order from the low-voltage leads **92** toward the high-voltage leads **102**. In other words, in plan view, the transformer chip **80** and the capacitor chip **120** are disposed between the low-voltage circuit chip **60** and the high-voltage circuit chip **70**. In plan view, the transformer chip **80** is disposed between the low-voltage circuit chip **60** and the capacitor chip **120**, and the capacitor chip **120** is disposed between the transformer chip **80** and the high-voltage circuit chip **70**.

In the same manner as the first embodiment, the low-voltage circuit chip **60** and the transformer chip **80** are mounted on the low-voltage die pad **91** of the low-voltage lead frame **90**.

In the second embodiment, the capacitor chip **120** and the high-voltage circuit chip **70** are mounted on the high-voltage die pad **101** of the high-voltage lead frame **100**. In the second embodiment, the dimension of the high-voltage die pad **101** in the y-direction is larger than that in the first embodiment to ensure the space for mounting the capacitor chip **120**. In an example, the dimension of the high-voltage die pad **101** in the y-direction is equal to the dimension of the low-voltage die pad **91** in the y-direction.

In plan view, the capacitor chip **120** is rectangular and has short sides and long sides. In plan view, the capacitor chip **120** is mounted on the high-voltage die pad **101** such that the long sides extend in the x-direction and the short sides extend in the y-direction. As shown in FIG. **5**, the capacitor chip **120** includes a chip main surface **120***s* and a chip back surface **120***r* facing in opposite directions in the z-direction. The capacitor chip **120** is bonded to the high-voltage die pad **101** by the conductive bonding material SD.

As shown in FIG. **4**, first electrode pads **121** and second electrode pads **122** are formed on the chip main surface **120***s* of the capacitor chip **120**. The first electrode pads **121** are disposed on the chip main surface **120***s* near the transformer chip **80**. The first electrode pads **121** are arranged in the x-direction. The second electrode pads **122** are disposed on the chip main surface **120***s* near the high-voltage circuit chip **70**. The second electrode pads **122** are arranged in the x-direction.

As shown in FIG. **5**, the capacitor chip **120** includes the two capacitors **50**A and **50**B (refer to FIG. **1**). More specifically, the capacitors **50**A and **50**B are arranged in a single package. The capacitor chip **120** includes an insulation layer **123**. The two electrodes **51**A and **52**A of the capacitor **50**A are embedded in the insulation layer **123** and spaced apart and opposed to each other in the z-direction with the insulation layer **123** interposed therebetween. In the second embodiment, the first electrode **51**A is disposed farther from the high-voltage die pad **101** than the second electrode **52**A. In the second embodiment, the insulation layer **123** is formed from a dielectric material. The insulation layer **123** is formed from, for example, SiO_2. The insulation layer **123**

may be a single layer or multiple layers. Although not shown, the layout of the capacitor **50**B in the capacitor chip **120** is the same as that of the capacitor **50**A.

The capacitors **50**A and **50**B are electrically connected to the first electrode pad **121** and the second electrode pad **122** in the capacitor chip **120**. In an example, as shown in FIG. **5**, the first electrode pad **121** is electrically connected to the first electrode **51**A of the capacitor **50**A. The second electrode pad **122** is electrically connected to the second electrode **52**A of the capacitor **50**A.

Although not shown, another first electrode pad **121** is electrically connected to the first electrode **51**B of the capacitor **50**B. Also, another second electrode pad **122** is electrically connected to the second electrode **52**B of the capacitor **50**B. The positional relationship between the electrodes **51**B and **52**B is the same as that between the electrodes **51**A and **52**A.

The capacitor chip **120** is electrically connected to the transformer chip **80** and the high-voltage circuit chip **70** by wires W. More specifically, the second electrode pads **82** of the transformer chip **80** and the first electrode pads **121** of the capacitor chip **120** are connected by the wires W. The second electrode pads **122** of the capacitor chip **120** and the first electrode pads **71** of the high-voltage circuit chip **70** are connected by the wires W. Thus, the transformer **40**, the capacitor **50**, and the high-voltage circuit **30** are electrically connected to each other.

The gate driver **10** of the second embodiment obtains the following advantages in addition to the advantages (1-1), (1-2), and (1-8) of the first embodiment.

(2-1) The gate driver **10** includes the low-voltage circuit chip **60** including the low-voltage circuit **20**, the high-voltage circuit chip **70** including the high-voltage circuit **30**, the transformer chip **80** including the transformer **40**, and the capacitor chip **120** including the capacitor **50**. The low-voltage circuit chip **60**, the transformer chip **80**, the capacitor chip **120**, and the high-voltage circuit chip **70** are arranged in this order.

With this structure, when adjacent ones of the chips **60**, **70**, **80**, and **120** in the arrangement direction (y-direction) of the chips **60**, **70**, **80**, and **120** are electrically connected to each other by wires W, the wires W do not need to extend over a certain chip. Thus, the connection structure of the wires W is simplified.

In addition, the transformer chip **80** and the capacitor chip **120** are disposed separately from the low-voltage circuit chip **60** and the high-voltage circuit chip **70**. This allows the low-voltage circuit chip **60** and the high-voltage circuit chip **70** to use the common transformer chip **80** and the common capacitor chip **120**. This reduces the costs for manufacturing different types of gate drivers that differ in at least one of the low-voltage circuit chip **60** and the high-voltage circuit chip **70**.

(2-2) The gate driver **10** includes the low-voltage die pad **91** on which the low-voltage circuit chip **60** is mounted and the high-voltage die pad **101** on which the high-voltage circuit chip **70** is mounted. The transformer chip **80** is mounted on the low-voltage die pad **91**, and the capacitor chip **120** is mounted on the high-voltage die pad **101**.

When the encapsulation resin **110** is formed, the encapsulation resin **110** is more likely to have a void in the vicinity of the die pads **91** and **101** as the area of the die pads **91** and **101** in plan view increases. If the transformer chip **80** and the capacitor chip **120** are mounted on the low-voltage die pad **91**, the area of the low-voltage die pad **91** will be excessively increased, and a void may be formed in the vicinity of the low-voltage die pad **91**.

In this regard, in the gate driver **10** of the second embodiment, the transformer chip **80** and the capacitor chip **120** are separately mounted on the low-voltage die pad **91** and the high-voltage die pad **101**, respectively. This avoids a situation in which one of the low-voltage die pad **91** and the high-voltage die pad **101** is excessively increased in size. Thus, formation of a void in the encapsulation resin **110** caused by an excessive increase in the area of one of the die pads **91** and **101** is limited.

Third Embodiment

A third embodiment of a gate driver **10** will be described with reference to FIGS. **6** and **7**. The gate driver **10** of the third embodiment differs from the gate driver **10** of the first embodiment mainly in the position where the capacitor **50** is arranged. In the following description, the differences from the first embodiment will be mainly described. The same reference characters are given to those components that are the same as the corresponding components of the gate driver **10** of the first embodiment. Such components will not be described in detail.

As shown in FIG. **6**, the capacitor **50** is disposed between the low-voltage circuit **20** and the transformer **40** in the circuitry, which differs from the first embodiment. More specifically, the capacitor **50**A is disposed between the low-voltage circuit **20** and the transformer **40**A in the circuitry, and the capacitor **50**B is disposed between the low-voltage circuit **20** and the transformer **40**B in the circuitry. In the third embodiment, the transformer **40**A and the capacitor **50**A are connected in series. The transformer **40**B and the capacitor **50**B are connected in series.

In the third embodiment, the transformer **40**A and the capacitor **50**A are connected in series by the low-voltage signal line **21**A, and the capacitor **50**A and the low-voltage circuit **20** are connected by the low-voltage signal line **21**A. Thus, the low-voltage circuit **20** and the transformer **40**A are electrically connected through the capacitor **50**A. Also, the transformer **40**B and the capacitor **50**B are connected in series by the low-voltage signal line **21**B, and the capacitor **50**B and the low-voltage circuit **20** are connected by the low-voltage signal line **21**B. Thus, the low-voltage circuit **20** and the transformer **40**B are electrically connected through the capacitor **50**B. In the third embodiment, the capacitor **50**A is not disposed between the transformer **40**A and the high-voltage circuit **30** in the circuitry, and the capacitor **50**B is not disposed between the transformer **40**B and the high-voltage circuit **30** in the circuitry.

As shown in FIG. **7**, the gate driver **10** includes the low-voltage circuit chip **60**, the high-voltage circuit chip **70**, and the transformer chip **80**. The layout of the chips **60**, **70**, and **80** and the structures of the lead frames **90** and **100** are the same as those in the first embodiment. As shown in FIG. **7**, the transformer chip **80** is mounted on the low-voltage die pad **91** of the low-voltage lead frame **90**.

The capacitors **50**A and **50**B (refer to FIG. **6**) of the third embodiment are incorporated in the low-voltage circuit chip **60**. More specifically, the low-voltage circuit chip **60** includes an insulation layer **64**. The capacitors **50**A and **50**B are embedded in the insulation layer **64**. The first electrode MA and the second electrode **52**A are spaced apart and opposed to each other in the z-direction with the insulation layer **64** disposed therebetween. In the third embodiment, the capacitors **50**A and **50**B are disposed in a portion of the low-voltage circuit chip **60** located close to the transformer chip **80** in the y-direction. In the third embodiment, the

insulation layer **64** is formed from a dielectric material. The insulation layer **64** is formed from, for example, SiO_2.

In the third embodiment, the capacitor **50** is located the chip main surface **60***s* from the low-voltage circuit **20** in the low-voltage circuit chip **60**. More specifically, as shown in FIG. **7**, the two electrodes **51**A and **52**A of the capacitor **50**A are located toward the chip main surface **60***s* from the low-voltage circuit **20** in the low-voltage circuit chip **60**. In plan view, the capacitors **50**A and **50**B are disposed to overlap the low-voltage circuit **20** in the low-voltage circuit chip **60**. The positions of the capacitors **50**A and **50**B in the low-voltage circuit chip **60** may be changed in any manner.

The capacitor **50** is electrically connected to the low-voltage circuit **20** and the second electrode pad **62** of the low-voltage circuit chip **60** in the low-voltage circuit chip **60**. More specifically, as shown in FIG. **7**, the first electrode **51**A of the capacitor **50**A is electrically connected to the low-voltage circuit **20** in the low-voltage circuit chip **60**. The second electrode **52**A of the capacitor **50**A is electrically connected to the second electrode pad **62** in the low-voltage circuit chip **60**.

Although not shown, the capacitor **50**B and the capacitor **50**A have the same structure. The two electrodes **51**B and **52**B of the capacitor **50**B are also located toward the chip main surface **60***s* from the low-voltage circuit **20** in the low-voltage circuit chip **60** and are electrically connected to the low-voltage circuit **20** and the second electrode pad **62** of the low-voltage circuit chip **60** in the low-voltage circuit chip **60**.

In the same manner as the first embodiment, the second electrode pad **62** is connected to the first electrode pad **81** of the transformer chip **80** by the wire W. More specifically, the second electrode pad **62** electrically connected to the second electrode **52**A of the capacitor **50**A is connected by the wire W to the first electrode pad **81** electrically connected to the first coil **41**A of the transformer **40**A. Although not shown, the second electrode pad **62** electrically connected to the second electrode **52**B of the capacitor **50**B is connected by the wire W to the first electrode pad **81** electrically connected to the first coil **41**B of the transformer **40**B.

The gate driver **10** of the third embodiment obtains the following advantages in addition to the advantages (1-1), (1-3), (1-7), and (1-8) of the first embodiment.

(3-1) The first electrode **51**A of the capacitor **50**A is electrically connected to the low-voltage circuit **20**, and the second electrode **52**A of the capacitor **50**A is electrically connected to the transformer **40**A. The first electrode **51**B of the capacitor **50**B is electrically connected to the low-voltage circuit **20**, and the second electrode **52**B of the capacitor **50**B is electrically connected to the transformer **40**B. With this structure, when a dielectric breakdown occurs in the transformer **40**A due to a short circuit between the first coil **41**A and the second coil **42**A, the capacitor **50**A maintains insulation between the low-voltage circuit **20** and the high-voltage circuit **30**. When a dielectric breakdown occurs in the transformer **40**B due to a short circuit between the first coil **41**B and the second coil **42**B, the capacitor **50**B maintains insulation between the low-voltage circuit **20** and the high-voltage circuit **30**. This inhibits application of a high voltage to the low-voltage circuit **20** due to the dielectric breakdown of the transformers **40**A and **40**B, thereby limiting application of a high voltage to the low-voltage lead frame **90**.

(3-2) The capacitors **50**A and **50**B are incorporated in the low-voltage circuit chip **60**.

With this structure, the number of chips in the gate driver **10** is reduced as compared with a structure in which the capacitors **50**A and **50**B are separate chips. This allows enlargement of the gate driver **10** to be limited.

(3-3) In the low-voltage circuit chip **60**, the capacitors **50**A and **50**B are disposed to overlap the low-voltage circuit **20** in plan view. This structure allows enlargement of the low-voltage circuit chip **60** to be limited.

(3-4) The capacitors **50**A and **50**B are disposed in the low-voltage circuit chip **60** near the transformer chip **80**. This structure shortens a conductive path between the capacitor **50**A and the transformer **40**A and a conductive path between the capacitor **50**B and the transformer **40**B. As a result, inductance caused by the length of the conductive paths is reduced.

Fourth Embodiment

A fourth embodiment of a gate driver **10** will be described with reference to FIGS. **8** and **9**. The gate driver **10** of the fourth embodiment differs from the gate driver **10** of the third embodiment mainly in that the capacitor **50** is not incorporated in the low-voltage circuit chip **60** and a capacitor chip **120** is included as a separate semiconductor chip. In the following description, the differences from the gate driver **10** of the third embodiment will be mainly described. The same reference characters are given to those components that are the same as the corresponding components of the gate driver **10** of the third embodiment. Such components will not be described in detail. In FIG. **8**, the encapsulation resin **110** is indicated by double-dashed lines to illustrate the internal structure of the gate driver **10**.

As shown in FIG. **8**, the gate driver **10** includes the low-voltage circuit chip **60**, the high-voltage circuit chip **70**, the transformer chip **80**, and a capacitor chip **120**. The chips **60**, **70**, **80**, and **120** are encapsulated by the encapsulation resin **110**. The low-voltage circuit chip **60**, the high-voltage circuit chip **70**, the transformer chip **80**, and the capacitor chip **120** are spaced apart from each other in the y-direction. In other words, the chips **60**, **70**, **80**, and **120** are arranged in the arrangement direction of the low-voltage die pad **91** and the high-voltage die pad **101**.

In the fourth embodiment, the low-voltage circuit chip **60**, the capacitor chip **120**, the transformer chip **80**, and the high-voltage circuit chip **70** are arranged in this order from the low-voltage leads **92** toward the high-voltage leads **102**. In other words, in plan view, the capacitor chip **120** and the transformer chip **80** are disposed between the low-voltage circuit chip **60** and the high-voltage circuit chip **70**, and the capacitor chip **120** is disposed between the low-voltage circuit chip **60** and the transformer chip **80**.

In the fourth embodiment, the low-voltage circuit chip **60**, the capacitor chip **120**, and the transformer chip **80** are mounted on the low-voltage die pad **91** of the low-voltage lead frame **90**. The capacitor chip **120** is bonded to the low-voltage die pad **91** by the conductive bonding material SD (refer to FIG. **9**). The shape and the arrangement position of the capacitor chip **120** in plan view are the same as those in the second embodiment. In the fourth embodiment, the dimension of the low-voltage die pad **91** in the y-direction is larger than that in the third embodiment to ensure the space for mounting the capacitor chip **120**. In the transformer chip **80**, the first coil **41**A is separated from the low-voltage die pad **91** by a distance sufficient to maintain insulation between the transformer chip **80** and the low-voltage die pad **91**.

Only the high-voltage circuit chip **70** is mounted on the high-voltage die pad **101** of the high-voltage lead frame **100**.

The high-voltage die pad **101** of the fourth embodiment is the same as the high-voltage die pad **101** of the first embodiment.

The capacitor chip **120** is electrically connected to the low-voltage circuit chip **60** and the transformer chip **80** by wires W. More specifically, the first electrode pads **121** of the capacitor chip **120** and the second electrode pads **62** of the low-voltage circuit chip **60** are connected by the wires W. The second electrode pads **122** of the capacitor chip **120** and the first electrode pads **81** of the transformer chip **80** are connected by the wires W.

As shown in FIG. **9**, the first electrode pad **121** electrically connected to the first electrode MA of the capacitor **50**A is connected by the wire W to the second electrode pad **62** electrically connected to the low-voltage circuit **20**. Thus, the first electrode MA of the capacitor **50**A is electrically connected to the low-voltage circuit **20**. The second electrode pad **122** electrically connected to the second electrode **52**A of the capacitor **50**A is electrically connected by the wire W to the second electrode pad **62** electrically connected to the first coil **41**A of the transformer **40**A. Thus, the second electrode **52**A of the capacitor **50**A is electrically connected to the first coil **41**A of the transformer **40**A.

Although not shown, in the same manner as the capacitor **50**A, the first electrode **51**B of the capacitor **50**B is electrically connected to the low-voltage circuit **20**, and the second electrode **52**B of the capacitor **50**B is electrically connected to the first coil **41**B of the transformer **40**B.

The gate driver **10** of the fourth embodiment obtains the following advantages in addition to the advantage (3-1) of the third embodiment.

(4-1) The gate driver **10** includes the low-voltage circuit chip **60** including the low-voltage circuit **20**, the high-voltage circuit chip **70** including the high-voltage circuit **30**, the transformer chip **80** including the transformer **40**, and the capacitor chip **120** including the capacitor **50**. The low-voltage circuit chip **60**, the capacitor chip **120**, the transformer chip **80**, and the high-voltage circuit chip **70** are arranged in this order. With this structure, the advantage (2-1) of the second embodiment is obtained.

Fifth Embodiment

A fifth embodiment of a gate driver **10** will be described with reference to FIGS. **10** and **11**. The gate driver **10** of the fifth embodiment differs from the gate driver **10** of the first embodiment in that the transformer includes a plurality of transformers having a double insulation structure. In the following description, the differences from the first embodiment will be described. The same reference characters are given to those components that are the same as the corresponding components of the gate driver **10** of the first embodiment. Such components will not be described in detail.

As shown in FIG. **10**, the transformer **40**A of the transformer **40** includes a first transformer **43**A and a second transformer **44**A that are connected in series. The transformer **40**B includes a first transformer **43**B and a second transformer **44**B that are connected in series. As described above, each of the transformers **40**A and **40**B has a double insulation structure. Thus, the insulation voltage of the gate driver **10** is greater than that in the first to fourth embodiments and is, for example, approximately 5000 Vrms.

The first transformer **43**A is electrically connected to the low-voltage circuit **20**. The first transformer **43**A includes a first coil **45**A and a second coil **46**A that is insulated from and configured to be magnetically coupled to the first coil **45**A.

The second transformer **44**A is electrically connected to the high-voltage circuit **30**. In other words, the second transformer **44**A is disposed on a signal line connecting the first transformer **43**A and the high-voltage circuit **30**. The second transformer **44**A includes a first coil **47**A and a second coil **48**A that is insulated from and configured to be magnetically coupled to the first coil **47**A.

The first coil **45**A is electrically connected to the low-voltage circuit **20** by the low-voltage signal line **21**A and is also connected to the ground of the low-voltage circuit **20**. More specifically, the first coil **45**A includes a first end electrically connected to the low-voltage circuit **20** and a second end electrically connected to the ground of the low-voltage circuit **20**. Thus, the potential of the second end of the first coil **45**A equals the first reference potential. The first reference potential is, for example, 0 V.

The second coil **46**A is connected to the first coil **47**A of the second transformer **44**A. In an example, the second coil **46**A and the first coil **47**A are connected to each other so as to be electrically floating. More specifically, the second coil **46**A includes a first end connected to a first end of the first coil **47**A, and a second end connected to a second end of the first coil **47**A. Thus, the second coil **46**A and the first coil **47**A serve as relay coils that relay transmission of a set signal from the first coil **45**A to the second coil **48**A.

The second coil **48**A is electrically connected to the high-voltage circuit **30** through the capacitor **50**A by the high-voltage signal line **31**A and is also connected to the ground of the high-voltage circuit **30**. More specifically, the second coil **48**A includes a first end electrically connected to the high-voltage circuit **30** through the capacitor **50**A and a second end electrically connected to the ground of the high-voltage circuit **30**. Thus, the potential of the second end of the second coil **48**A equals the second reference potential. The second reference potential varies as the inverter device **500** is driven and is, for example, greater than or equal to 600 V.

In the same manner as the first embodiment, the capacitor **50**A is disposed on the high-voltage signal line **31**A. The capacitor **50**A is disposed between the second transformer **44**A and the high-voltage circuit **30**. Thus, the capacitor **50**A is disposed on the high-voltage signal line **31**A that connects the second transformer **44**A and the high-voltage circuit **30**. The capacitor **50**A is connected in series to the second transformer **44**A. The first electrode MA of the capacitor **50**A is electrically connected to the second coil **48**A, and the second electrode **52**A of the capacitor **50**A is electrically connected to the high-voltage circuit **30**.

The first transformer **43**B of the transformer **40**B includes a first coil **45**B electrically connected to the low-voltage circuit **20** and a second coil **46**B insulated from and configured to be magnetically coupled to the first coil **45**B.

The second transformer **44**B of the transformer **40**B includes a first coil **47**B electrically connected to the high-voltage circuit **30** and a second coil **48**B insulated from and configured to be magnetically coupled to the first coil **47**B. The transformer **40**B and the capacitor **50**B are the same as the transformer **40**A and the capacitor **50**A and thus will not be described in detail.

As shown in FIG. **11**, the gate driver **10** includes the low-voltage circuit chip **60**, the high-voltage circuit chip **70**, a first transformer chip **80**A, and a second transformer chip **80**B. The low-voltage circuit chip **60**, the high-voltage circuit chip **70**, the first transformer chip **80**A, and the

second transformer chip **80**B are spaced apart from each other in the y-direction. In other words, the chips **60**, **70**, **80**A, and **80**B are arranged in the arrangement direction of the low-voltage die pad **91** and the high-voltage die pad **101**.

In the fifth embodiment, the low-voltage circuit chip **60**, the first transformer chip **80**A, the second transformer chip **80**B, and the high-voltage circuit chip **70** are arranged in this order from the low-voltage leads **92** toward the high-voltage leads **102** (refer to FIG. **2**). In other words, in plan view, the transformer chips **80**A and **80**B are disposed between the low-voltage circuit chip **60** and the high-voltage circuit chip **70**.

In the fifth embodiment, the low-voltage circuit chip **60** and the first transformer chip **80**A are mounted on the low-voltage die pad **91** of the low-voltage lead frame **90**. The high-voltage circuit chip **70** and the second transformer chip **80**B are mounted on the high-voltage die pad **101** of the high-voltage lead frame **100**.

The first transformer chip **80**A includes the first transformer **43**A of the transformer **40**A and the first transformer **43**B of the transformer **40**B (refer to FIG. **10**). More specifically, the transformers **43**A and **43**B are arranged into a single package. Thus, the first transformer chip **80**A includes ones of the transformers **40**A and **40**B that are located closer to the low-voltage circuit **20** than to the high-voltage circuit **30** in the circuitry.

As shown in FIG. **11**, the first transformer chip **80**A includes the insulation layer **83** in the same manner as the transformer chip **80** of the first embodiment. The two coils **45**A and **46**A of the first transformer **43**A are embedded in the insulation layer **83** and are spaced apart and opposed to each other in the z-direction with the insulation layer **83** interposed therebetween. The insulation layer **83** may be a single layer or multiple layers.

The two coils **45**A and **46**A are formed of a conductive layer embedded in the insulation layer **83**. In the fifth embodiment, the second coil **46**A is disposed farther from the low-voltage die pad **91** than the first coil **45**A. The first coil **45**A is electrically connected to a first electrode pad **81**A, and the second coil **46**A is electrically connected to a second electrode pad **82**A. Although not shown, the layout of the first transformer **43**B in the first transformer chip **80**A is the same as that of the first transformer **43**A.

The second transformer chip **80**B includes the second transformer **44**A of the transformer **40**A and the second transformer **44**B of the transformer **40**B (refer to FIG. **10**). More specifically, the transformers **44**A and **44**B are arranged into a single package. Thus, the second transformer chip **80**B includes ones of the transformers **40**A and **40**B that are located closer to the high-voltage circuit **30** than to the low-voltage circuit **20** in the circuitry.

As shown in FIG. **11**, the second transformer chip **80**B includes the insulation layer **83** in the same manner as the transformer chip **80** of the first embodiment. The two coils **47**A and **48**A of the second transformer **44**A are embedded in the insulation layer **83** and are spaced apart and opposed to each other in the z-direction with the insulation layer **83** interposed therebetween. The insulation layer **83** may be a single layer or multiple layers.

The two coils **47**A and **48**A are formed of a conductive layer embedded in the insulation layer **83**. In the fifth embodiment, the first coil **47**A is disposed farther from the high-voltage die pad **101** than the second coil **48**A. The first coil **47**A is electrically connected to the first electrode pad **81**B, and the second coil **48**A is electrically connected to the second electrode pad **82**B. Although not shown, the layout of the second transformer **44**B in the second transformer chip **80**B is the same as that of the second transformer **44**A.

The low-voltage circuit chip **60** and the first transformer chip **80**A are connected by wires W. More specifically, the second electrode pads **62** of the low-voltage circuit chip **60** and the first electrode pads **81**A of the first transformer chip **80**A are connected by the wires W. Thus, the low-voltage circuit **20** is electrically connected to the first coil **45**A of the first transformer **43**A and the first coil **45**B of the first transformer **43**B.

The first transformer chip **80**A and the second transformer chip **80**B are connected by wires W. More specifically, the second electrode pads **82**A of the first transformer chip **80**A and the first electrode pads **81**B of the second transformer chip **80**B are connected by the wires W. Thus, the second coil **46**A of the first transformer **43**A is electrically connected to the first coil **47**A of the second transformer **44**A, and the second coil **46**B of the first transformer **43**B is electrically connected to the first coil **47**B of the second transformer **44**B (refer to FIG. **10**).

The second transformer chip **80**B and the high-voltage circuit chip **70** are connected by wires W. More specifically, the second electrode pads **82**B of the second transformer chip **80**B and the first electrode pads **71** of the high-voltage circuit chip **70** are connected by the wires W. Thus, the second coil **48**A of the second transformer **44**A is electrically connected to the first electrode MA of the capacitor **50**A, and the second coil **48**B of the second transformer **44**B is electrically connected to the first electrode MB of the capacitor **50**B (refer to FIG. **10**).

The gate driver **10** of the fifth embodiment obtains the following advantages in addition to the advantages (1-1) to (1-8) of the first embodiment.

(5-1) The transformer **40**A includes the first transformer **43**A and the second transformer **44**A connected in series. The transformer **40**B includes the first transformer **43**B and the second transformer **44**B connected in series. With this structure, the first transformer **43**A and the second transformer **44**A form a double insulation structure between the low-voltage circuit **20** and the high-voltage circuit **30** in the signal line that transmits the set signal. The first transformer **43**B and the second transformer **44**B form a double insulation structure between the low-voltage circuit **20** and the high-voltage circuit **30** in the signal line that transmits the reset signal. This improves the insulation voltage of the gate driver **10**.

Sixth Embodiment

A sixth embodiment of a gate driver **10** will be described with reference to FIGS. **12** and **13**. The gate driver **10** of the sixth embodiment differs from the gate driver **10** of the second embodiment mainly in that the gate driver **10** of the sixth embodiment includes a plurality of packages. In the following description, the differences from the second embodiment will be described. The same reference characters are given to those components that are the same as the corresponding components of the gate driver **10** of the second embodiment. Such components will not be described in detail.

As shown in FIG. **12**, the gate driver **10** of the sixth embodiment has the same circuit configuration as the gate driver **10** of the first embodiment. The gate driver **10** includes a low-voltage circuit module **200**, a high-voltage circuit module **210**, and an insulation module **220**.

The low-voltage circuit module **200** includes a low-voltage circuit **20**. In an example, although not shown, the

low-voltage circuit module **200** includes a low-voltage circuit chip including the low-voltage circuit **20**, a low-voltage lead frame including a low-voltage die pad on which the low-voltage circuit chip is mounted, and an encapsulation resin encapsulating a part of the low-voltage lead frame and the low-voltage circuit chip.

The high-voltage circuit module **210** includes a high-voltage circuit **30**. In an example, although not shown, the high-voltage circuit module **210** includes a high-voltage circuit chip including the high-voltage circuit **30**, a high-voltage lead frame including a high-voltage die pad on which the high-voltage circuit chip is mounted, and an encapsulation resin encapsulating a part of the high-voltage lead frame and the high-voltage circuit chip.

The insulation module **220** insulates the low-voltage circuit **20** from the high-voltage circuit **30** while allowing transmission of the set signal and the reset signal from the low-voltage circuit **20** to the high-voltage circuit **30**. That is, the insulation module **220** is used to insulate the low-voltage circuit **20** and the high-voltage circuit **30** included in the gate driver **10**. The insulation module **220** includes a transformer **40** and a capacitor **50**. In the same manner as the first embodiment, the transformer **40** and the capacitor **50** are used to transmit signals (set signal and reset signal) between the low-voltage circuit **20** and the high-voltage circuit **30**. As shown in FIG. **12**, the insulation module **220** is disposed between the low-voltage circuit **20** and the high-voltage circuit **30** in the circuitry. Thus, the low-voltage circuit **20** and the high-voltage circuit **30** are connected by the transformer **40** and the capacitor **50**.

FIG. **13** shows an example of a schematic cross-sectional structure of the insulation module **220**. As shown in FIG. **13**, the insulation module **220** includes a transformer chip **80**, a capacitor chip **120**, a low-voltage lead frame **221**, a high-voltage lead frame **222**, and an encapsulation resin **223** that encapsulates the transformer chip **80**, the capacitor chip **120**, and a part of each of the lead frames **221** and **222**.

The lead frames **221** and **222** are formed from a conductor and, in the sixth embodiment, are formed from Cu. The lead frames **221** and **222** are disposed to extend from the inside to the outside of the encapsulation resin **223**.

The low-voltage lead frame **221** is electrically connected to the low-voltage circuit **20** (refer to FIG. **12**) and includes a low-voltage die pad **221***a* disposed in the encapsulation resin **223** and a plurality of low-voltage leads **221***b* disposed to extend from the inside to the outside of the encapsulation resin **223**. The low-voltage leads **221***b* include external terminals electrically connected to the low-voltage circuit **20**.

The high-voltage lead frame **222** is electrically connected to the high-voltage circuit **30** (refer to FIG. **12**) and includes a high-voltage die pad **222***a* disposed in the encapsulation resin **223** and a plurality of high-voltage leads **222***b* disposed to extend from the inside to the outside of the encapsulation resin **223**. The high-voltage leads **222***b* include external terminals electrically connected to the high-voltage circuit **30**.

In the sixth embodiment, the transformer chip **80** is mounted on the low-voltage die pad **221***a*, and the capacitor chip **120** is mounted on the high-voltage die pad **222***a*. In the sixth embodiment, the low-voltage die pad **221***a* corresponds to a first die pad, and the high-voltage die pad **222***a* corresponds to a second die pad. The low-voltage lead **221***b* corresponds to a first lead, and the high-voltage lead **222***b* corresponds to a second lead.

In the sixth embodiment, the transformer chip **80** and the capacitor chip **120** are arranged in this order from the low-voltage leads **221***b* toward the high-voltage leads **222***b*.

In the gate driver **10**, the first coils **41**A and **41**B (refer to FIG. **12**) of the transformers **40**A and **40**B are electrically connected to the low-voltage circuit **20** and are connected to the ground of the low-voltage circuit **20**. More specifically, each of the first coils **41**A and **41**B includes a first end electrically connected to the low-voltage circuit **20** and a second end connected to the ground of the low-voltage circuit **20**.

The first electrode pads **81** of the transformer chip **80** are connected to the low-voltage leads **221***b* by a wire W. Thus, the first coil **41**A of the transformer **40**A is electrically connected to one of the low-voltage leads **221***b*. Although not shown, the first coil **41**B of the transformer **40**B is electrically connected to another one of the low-voltage leads **221***b*. Although not shown, the first coils **41**A and **41**B of the transformers **40**A and **40**B are connected by wires W to the low-voltage leads **221***b* integrated with the low-voltage die pad **221***a*.

In the gate driver **10**, the second coils **42**A and **42**B (refer to FIG. **12**) of the transformers **40**A and **40**B are electrically connected to the capacitors **50**A and **50**B and are connected to the ground of the high-voltage circuit **30**. More specifically, the first ends of the second coils **42**A and **42**B are electrically connected to the capacitors **50**A and **50**B, and the second ends of the second coils **42**A and **42**B are connected to the ground of the high-voltage circuit **30**.

The second electrode pads **82** of the transformer chip **80** are connected to the first electrode pads **121** of the capacitor chip **120** by wires W. Thus, the second coil **42**A of the transformer **40**A is electrically connected to the first electrode **51**A of the capacitor **50**A (refer to FIG. **12**). Although not shown, the second coil **42**B of the transformer **40**B is electrically connected to the first electrode **51**B of the capacitor **50**B (refer to FIG. **12**). Although not shown, the second coils **42**A and **42**B of the transformers **40**A and **40**B are electrically connected by wires W to the high-voltage leads **222***b* integrated with the high-voltage die pad **222***a*.

The sixth embodiment obtains the following advantages in addition to the advantages (1-1), (1-2), and (1-8) of the first embodiment.

(6-1) The transformer **40** and the capacitor **50** are included in the insulation module **220**, which is a semiconductor module differing from the low-voltage circuit module **200** and the high-voltage circuit module **210**.

This structure allows the low-voltage circuit module **200** and high-voltage circuit module **210**, which differ from each other, to use the common insulation module **220**. This reduces the costs for manufacturing different types of gate drivers that differ in at least one of the low-voltage circuit module **200** and the high-voltage circuit module **210**.

Seventh Embodiment

A seventh embodiment of a gate driver **10** will be described with reference to FIGS. **14** and **15**. The gate driver **10** of the seventh embodiment differs from the gate driver **10** of the second embodiment mainly in that the gate driver **10** of the sixth embodiment includes a plurality of packages. In the following description, the differences from the second embodiment will be described. The same reference characters are given to those components that are the same as the corresponding components of the gate driver **10** of the second embodiment. Such components will not be described in detail.

As shown in FIG. **14**, the gate driver **10** of the seventh embodiment has the same circuit configuration as the gate driver **10** of the first embodiment. The gate driver **10** includes a low-voltage circuit unit **300** and a high-voltage circuit module **310**. The high-voltage circuit module **310** has the same structure as the high-voltage circuit module **210** (refer to FIG. **12**) of the sixth embodiment.

The low-voltage circuit unit **300** includes a low-voltage circuit **20**, a transformer **40**, and a capacitor **50**. The low-voltage circuit unit **300** insulates the low-voltage circuit **20** from the high-voltage circuit **30** while allowing transmission of the set signal and the reset signal from the low-voltage circuit **20** to the high-voltage circuit **30**.

FIG. **15** shows an example of a schematic cross-sectional structure of the low-voltage circuit unit **300**. As shown in FIG. **15**, the low-voltage circuit unit **300** includes a low-voltage circuit chip **60** including the low-voltage circuit **20**, a transformer chip **80**, a capacitor chip **120**, a low-voltage lead frame **301**, a high-voltage lead frame **302**, and an encapsulation resin **320** that encapsulates the chips **60**, **80**, **120** and a part of each of the lead frames **301** and **302**. In other words, the low-voltage circuit unit **300** includes an insulation module that includes the transformer **40** and the capacitor **50**. That is, the low-voltage circuit unit **300** includes the insulation module and the low-voltage circuit **20** (refer to FIG. **14**). In other words, the insulation module includes the transformer chip **80** and the capacitor chip **120**.

The lead frames **301** and **302** are formed from a conductor and, in the seventh embodiment, are formed from Cu. The lead frames **301** and **302** are disposed to extend from the inside to the outside of the encapsulation resin **320**.

The low-voltage lead frame **301** is electrically connected to the low-voltage circuit **20** and includes a low-voltage die pad **301***a* disposed in the encapsulation resin **320** and a plurality of low-voltage leads **301***b* disposed to extend from the inside to the outside of the encapsulation resin **320**. The low-voltage leads **301***b* include external terminals electrically connected to the low-voltage circuit **20**.

The high-voltage lead frame **302** is electrically connected to the high-voltage circuit **30** (refer to FIG. **14**) and includes a plurality of high-voltage leads **302***a* disposed to extend from the inside to the outside of the encapsulation resin **320**. The high-voltage leads **302***a* include external terminals electrically connected to the high-voltage circuit **30**.

In the seventh embodiment, the low-voltage circuit chip **60**, the transformer chip **80**, and the capacitor chip **120** are mounted on the low-voltage die pad **301***a*. The low-voltage circuit chip **60**, the transformer chip **80**, and the capacitor chip **120** are spaced apart from each other in the y-direction. In the seventh embodiment, the low-voltage circuit chip **60**, the transformer chip **80**, and the capacitor chip **120** are arranged in this order from the low-voltage leads **301***b* toward the high-voltage leads **302***a*. In the capacitor chip **120**, the second electrode **52**A is separated from the low-voltage die pad **301***a* by a distance sufficient to maintain insulation between the capacitor chip **120** and the low-voltage die pad **301***a*.

The low-voltage circuit chip **60**, the transformer chip **80**, and the capacitor chip **120** are connected by wires W in the same manner as those of the second embodiment. The second electrode pads **122** of the capacitor chip **120** are connected to a plurality of high-voltage leads **302***a* by wires W. The seventh embodiment obtains the advantages (1-1), (1-2), and (1-8) of the first embodiment.

Eighth Embodiment

An eighth embodiment of a gate driver **10** will be described with reference to FIGS. **16** and **17**. The gate driver **10** of the eighth embodiment differs from the gate driver **10** of the second embodiment mainly in that the gate driver **10** of the eighth embodiment includes a plurality of packages. In the following description, the differences from the second embodiment will be described. The same reference characters are given to those components that are the same as the corresponding components of the gate driver **10** of the second embodiment. Such components will not be described in detail.

As shown in FIG. **16**, the gate driver **10** of the eighth embodiment has the same circuit configuration as the gate driver **10** of the first embodiment. The gate driver **10** includes a low-voltage circuit module **400** and a high-voltage circuit unit **410**. The low-voltage circuit module **400** has the same structure as the low-voltage circuit module **200** (refer to FIG. **12**) of the sixth embodiment.

The high-voltage circuit unit **410** includes a high-voltage circuit **30**, a transformer **40**, and a capacitor **50**. The high-voltage circuit unit **410** insulates the low-voltage circuit **20** from the high-voltage circuit **30** while allowing transmission of the set signal and the reset signal from the low-voltage circuit **20** to the high-voltage circuit **30**.

FIG. **17** shows an example of a schematic cross-sectional structure of the high-voltage circuit unit **410**. As shown in FIG. **17**, the high-voltage circuit unit **410** includes a high-voltage circuit chip **70**, a transformer chip **80**, a capacitor chip **120**, a low-voltage lead frame **411**, a high-voltage lead frame **412**, and an encapsulation resin **420** that encapsulates the chips **70**, **80**, and **120** and a part of each of the lead frames **411** and **412**. In other words, the high-voltage circuit unit **410** includes an insulation module that includes the transformer **40** and the capacitor **50**. That is, the high-voltage circuit unit **410** includes the insulation module and the high-voltage circuit **30** (refer to FIG. **16**). In other words, the insulation module includes the transformer chip **80** and the capacitor chip **120**.

The lead frames **411** and **412** are formed from a conductor and, in the eighth embodiment, are formed from Cu. The lead frames **411** and **412** are disposed to extend from the inside to the outside of the encapsulation resin **420**.

The low-voltage lead frame **411** is electrically connected to the low-voltage circuit **20** (refer to FIG. **16**) and includes a plurality of low-voltage leads **411***a* disposed to extend from the inside to the outside of the encapsulation resin **420**. The low-voltage leads **411***a* include external terminals electrically connected to the low-voltage circuit **20**.

The high-voltage lead frame **412** is electrically connected to the high-voltage circuit **30** and includes a high-voltage die pad **412***a* disposed in the encapsulation resin **420** and a plurality of high-voltage leads **412***b* disposed to extend from the inside to the outside of the encapsulation resin **420**. The high-voltage leads **412***b* include external terminals electrically connected to the high-voltage circuit **30**.

In the eighth embodiment, the high-voltage circuit chip **70**, the transformer chip **80**, and the capacitor chip **120** are mounted on the high-voltage die pad **412***a*. The high-voltage circuit chip **70**, the transformer chip **80**, and the capacitor chip **120** are spaced apart from each other in the y-direction. In the eighth embodiment, the transformer chip **80**, the capacitor chip **120**, and the high-voltage circuit chip **70** are arranged in this order from the low-voltage lead **411***a* toward the high-voltage lead **412***b*. In the transformer chip **80**, the first coil **41**A is separated from the high-voltage die pad **412***a* by a distance sufficient to maintain insulation between the transformer chip **80** and the high-voltage die pad **412***a* even when the second reference potential of the high-voltage die pad **412***a* fluctuates and becomes high.

The high-voltage circuit chip **70**, the transformer chip **80**, and the capacitor chip **120** are connected by wires Win the same manner as those of the second embodiment. The first electrode pads **81** of the transformer chip **80** are connected to the low-voltage leads **411***a* by wires W. The eighth embodiment obtains the advantages (1-1), (1-2), and (1-8) of the first embodiment.

Modified Examples

The above embodiments exemplify, without any intention to limit, applicable forms of a gate driver, an insulation module, a low-voltage circuit unit, and a high-voltage circuit unit according to the present disclosure. The gate driver, the insulation module, the low-voltage circuit unit, and the high-voltage circuit unit according to the present disclosure can be applicable to forms differing from the above embodiments. In an example of such a form, the structure of the embodiments is partially replaced, changed, or omitted, or a further structure is added to the embodiments. The modified examples described below may be combined with one another as long as there is no technical inconsistency. In the modified examples, the same reference characters are given to those components that are the same as the corresponding components of the above embodiments. Such components will not be described in detail.

In the first and second embodiments, the transformer chip **80** is arranged separately from the low-voltage circuit chip **60** and the high-voltage circuit chip **70**. However, there is no limit to such arrangement. In an example, the transformer **40** may be incorporated into the low-voltage circuit chip **60**.

When the transformer **40** is incorporated in the low-voltage circuit chip **60**, for example, the transformer **40** is arranged in the low-voltage circuit chip **60** near the high-voltage circuit chip **70** in the y-direction. In plan view, the transformer **40** is disposed to overlap the low-voltage circuit **20**. In this case, the transformer **40** is disposed closer to the chip main surface **60***s* of the low-voltage circuit chip **60** than the low-voltage circuit **20**.

With this structure, the number of semiconductor chips in the gate driver **10** is reduced, thereby reducing the space for arranging the semiconductor chips in the arrangement direction (y-direction) of the semiconductor chips. Accordingly, the encapsulation resin **110** is reduced in size in the y-direction. As a result, the gate driver **10** is reduced in size.

In the third and fourth embodiments, in the same manner, the transformer **40** may be incorporated in the high-voltage circuit chip **70** instead of the transformer chip **80**. The structure in which the transformer **40** is incorporated into the high-voltage circuit chip **70** is the same as the structure in which the transformer **40** is incorporated into the low-voltage circuit chip **60**.

In the second embodiment, as shown in FIG. **18**, the capacitor chip **120** may be mounted on the low-voltage die pad **91**. That is, the transformer chip **80** and the capacitor chip **120** may be mounted on the low-voltage die pad **91**. In the capacitor chip **120**, the second electrode **52**A is separated from the low-voltage die pad **91** by a distance sufficient to maintain insulation between the capacitor chip **120** and the low-voltage die pad **91**.

In the second embodiment, as shown in FIG. **19**, the transformer chip **80** may be mounted on the high-voltage die pad **101**. That is, the transformer chip **80** and the capacitor chip **120** may be mounted on the high-voltage die pad **101**. In the transformer chip **80**, the first coil **41**A is separated from the high-voltage die pad **101** by a distance sufficient to maintain insulation between the transformer chip **80** and the high-voltage die pad **101** even when the second reference potential of the high-voltage die pad **101** fluctuates and becomes high.

In the fourth embodiment, as shown in FIG. **20**, the transformer chip **80** may be mounted on the high-voltage die pad **101**. That is, the capacitor chip **120** may be mounted on the low-voltage die pad **91**, and the transformer chip **80** may be mounted on the high-voltage die pad **101**.

In the fourth embodiment, the capacitor chip **120** and the transformer chip **80** may be mounted on the high-voltage die pad **101**. In the capacitor chip **120**, the second electrode **52**A is separated from the high-voltage die pad **101** by a distance sufficient to maintain insulation between the capacitor chip **120** and the high-voltage die pad **101** even when the second reference potential of the high-voltage die pad **101** fluctuates and becomes high.

In the fifth embodiment, both the first transformer chip **80**A and the second transformer chip **80**B may be mounted on the low-voltage die pad **91**. In the second transformer chip **80**B, the second coil **48**A is separated from the low-voltage die pad **91** by a distance sufficient to maintain insulation between the second transformer chip **80**B and the low-voltage die pad **91**.

In the fifth embodiment, the first transformer chip **80**A and the second transformer chip **80**B may be mounted on the high-voltage die pad **101**. In the first transformer chip **80**A, the first coil **45**A is separated from the high-voltage die pad **101** by a distance sufficient to maintain insulation between the first transformer chip **80**A and the high-voltage die pad **101** even when the second reference potential of the high-voltage die pad **101** fluctuates and becomes high.

In the fifth embodiment, the first transformers **43**A and **43**B may be incorporated in the low-voltage circuit chip **60**.

In the fifth embodiment, the second transformers **44**A and **44**B may be incorporated in the high-voltage circuit chip **70**.

The structure of the transformer **40** of the fifth embodiment may be combined with each of the second to fourth embodiments and each modified example of the second to fourth embodiments. In addition, the structure of the transformer **40** of the fifth embodiment may be combined with each of the sixth to eighth embodiments and each modified example of the sixth to eighth embodiments as described below.

In a first example, in the fifth embodiment, while the capacitor **50** is omitted from the high-voltage circuit chip **70**, the gate driver **10** may include a capacitor chip **120** that includes the capacitor **50**. In this case, the low-voltage circuit chip **60**, the first transformer chip **80**A, the second transformer chip **80**B, the capacitor chip **120**, and the high-voltage circuit chip **70** may be arranged in this order from the low-voltage leads **92** toward the high-voltage leads **102**.

In a second example, in the fifth embodiment, the capacitor **50**A may be disposed between the low-voltage circuit **20** and the transformer **40** in the circuitry. More specifically, the first electrode **51**A of the capacitor **50**A is electrically connected to the low-voltage circuit **20**, and the second electrode **52**A of the capacitor **50**A is electrically connected to the first transformer **43**A. The capacitor **50**A is connected in series to the first transformer **43**A. The transformer **40**B and the capacitor **50**B are the same as the transformer **40**A and the capacitor **50**A.

In the second example, the capacitor **50** may be incorporated in the low-voltage circuit chip **60**.

In the second example, the first transformer chip **80**A may be mounted on the low-voltage die pad **91**, and the second transformer chip **80**B may be mounted on the high-voltage die pad **101**.

In the second example, both the first transformer chip **80**A and the second transformer chip **80**B may be mounted on the low-voltage die pad **91** or the high-voltage die pad **101**. When both the first transformer chip **80**A and the second transformer chip **80**B are mounted on the low-voltage die pad **91**, in the second transformer chip **80**B, the second coil **48**A is separated from the low-voltage die pad **91** by a distance sufficient to maintain insulation between the second transformer chip **80**B and the low-voltage die pad **91**. When both the first transformer chip **80**A and the second transformer chip **80**B are mounted on the high-voltage die pad **101**, in the first transformer chip **80**A, the first coil **45**A is separated from the high-voltage die pad **101** by a distance sufficient to maintain insulation between the first transformer chip **80**A and the high-voltage die pad **101** even when the second reference potential of the high-voltage die pad **101** fluctuates and becomes high.

In the second example, the gate driver **10** may include the capacitor chip **120** including the capacitor **50**. In this case, the low-voltage circuit chip **60**, the capacitor chip **120**, the first transformer chip **80**A, the second transformer chip **80**B, and the high-voltage circuit chip **70** may be arranged in this order from the low-voltage leads **92** toward the high-voltage leads **102**.

In the sixth embodiment, the transformer chip **80** and the capacitor chip **120** are separately mounted on separate die pads. Instead, the transformer chip **80** and the capacitor chip **120** may be mounted on a common die pad. In this case, the insulation module **220** includes the common die pad on which the transformer chip **80** and the capacitor chip **120** are mounted, a first lead electrically connected to the transformer **40**, and a second lead electrically connected to the capacitor **50**. The transformer chip **80** is connected to the first lead by a wire so that the transformer **40** is electrically connected to the first lead. Also, the capacitor chip **120** is connected to the second lead by a wire so that the capacitor **50** is electrically connected to the second lead.

In the sixth embodiment, when the capacitor **50** is disposed between the low-voltage circuit **20** and the transformer **40** in the circuitry, the transformer chip **80** may be mounted on the high-voltage die pad **222***a* and the capacitor chip **120** may be mounted on the low-voltage die pad **221***a*. In this case, the high-voltage die pad **222***a* corresponds to a first die pad, and the low-voltage die pad **221***a* corresponds to a second die pad. The high-voltage lead **222***b* corresponds to a first lead, and the low-voltage lead **221***b* corresponds to a second lead.

In the seventh embodiment, the low-voltage circuit unit **300** may have the structure and arrangement of the chips **60**, **80**, and **120** of the first to fifth embodiments. In an example, high-voltage lead frame **302** may include a high-voltage die pad. In this case, the low-voltage circuit chip **60** and the transformer chip **80** may be mounted on the low-voltage die pad **301***a*, and the capacitor chip **120** may be mounted on the high-voltage die pad.

In the eighth embodiment, the high-voltage circuit unit **410** may have the structure and arrangement of the chips **70**, **80**, **120** of the first to fifth embodiments. In an example, the low-voltage lead frame **411** may include a low-voltage die pad. In this case, the high-voltage circuit chip **70** and the capacitor chip **120** may be mounted on the high-voltage die pad **412***a*, and the transformer chip **80** may be mounted on the low-voltage die pad.

In the first to third embodiments, the transformer chip **80** may be mounted on the high-voltage die pad **101** of the high-voltage lead frame **100**. In the transformer chip **80**, the first coil **41**A is separated from the high-voltage die pad **101** by a distance sufficient to maintain insulation between the transformer chip **80** and the high-voltage die pad **101** even when the second reference potential of the high-voltage die pad **101** fluctuates and becomes high.

In each embodiment, the gate driver **10** includes the signal path for transmitting the set signal and the signal path for transmitting the reset signal. Instead, the set signal and the reset signal may be transmitted through a common signal path. That is, the gate driver **10** may include a single signal path for transmitting signals that drive the switching element **501**.

In each embodiment, the number of capacitors **50**A connected in series to the transformer **40**A and the number of capacitors **50**B connected in series to the transformer **40**B may be changed in any manner. In an example, a plurality of capacitors **50**A may be provided and connected to each other in series. A plurality of capacitors **50**B may be provided and connected to each other in series. As described above, a plurality of capacitors **50** connected in series may be provided.

This structure increases the number of capacitors **50** connected in series, thereby improving the insulation voltage of the gate driver **10** when dielectric breakdown occurs in the transformer **40** due to a short circuit between the first coil **41**A (**41**B) and the second coil **42**A (**42**B).

In each embodiment, capacitors **50** may be disposed between the low-voltage circuit **20** and the transformer **40** and between the transformer **40** and the high-voltage circuit **30** in the circuitry. Each of the capacitors **50** is connected in series to the transformer **40**.

In an example, as shown in FIG. **21**, the capacitors **50** include low-voltage capacitors **50**AL and **50**BL disposed between the low-voltage circuit **20** and the transformer **40** and high-voltage capacitors **50**AH and **50**BH disposed between the transformer **40** and the high-voltage circuit **30**.

The low-voltage capacitor **50**AL includes a first electrode **51**AL and a second electrode **52**AL. The first electrode **51**AL is electrically connected to the low-voltage circuit **20**. The second electrode **52**AL is electrically connected to the transformer **40**A. The second electrode **52**AL is electrically connected to the first coil **41**A of the transformer **40**A. Thus, the low-voltage circuit **20** and the transformer **40**A are electrically connected to each other through the low-voltage capacitor **50**AL. The first electrode **51**AL corresponds to a first low-voltage electrode. The second electrode **52**AL corresponds to a second low-voltage electrode.

The high-voltage capacitor **50**AH includes a first electrode **51**AH and a second electrode **52**AH. The first electrode **51**AH is electrically connected to the transformer **40**A. The second electrode **52**AH is electrically connected to the high-voltage circuit **30**. The first electrode **51**AH is electrically connected to the second coil **42**A of the transformer **40**A. In other words, the transformer **40**A and the high-voltage circuit **30** are electrically connected to each other through the high-voltage capacitor **50**AH. The first electrode **51**AH correspond to a first high-voltage electrode. The second electrodes **52**AH correspond to a second high-voltage electrode.

The low-voltage capacitor **50**BL includes a first electrode **51**BL and a second electrode **52**BL. The high-voltage capacitor **50**BH includes a first electrode **51**BH and a second electrode **52**BH. The connection structure of the capacitors **50**BL and **50**BH to the low-voltage circuit **20**, the trans-

former **40**, and the high-voltage circuit **30** is the same as that of the capacitors **50**AL and **50**AH and thus will not be described in detail. The first electrode **51**BL corresponds to a first low-voltage electrode. The second electrode **52**BL corresponds to a second low-voltage electrode. The first electrode **51**BH corresponds to a first high-voltage electrode. The second electrode **52**BH corresponds to a second high-voltage electrode.

With this structure, when dielectric breakdown occurs in the transformer **40** due to a short circuit between the first coil **41**A (**41**B) and the second coil **42**A (**42**B), the high-voltage circuit **30** and the low-voltage circuit **20** are insulated from each other by the high-voltage capacitors **50**AH and **50**BH and the low-voltage capacitors **50**AL and **50**BL. Thus, insulation between the low-voltage circuit **20** and the high-voltage circuit **30** is likely to be maintained. In addition, the breakdown voltage of each of the capacitors **50**AL, **50**AH, **50**BL, and **50**BH may be decreased.

In each embodiment, the gate driver **10** may include a signal path that transmits a signal from the high-voltage circuit **30** to the low-voltage circuit **20**. As shown in FIG. **22**, an example of a structure in which the gate driver **10** of the first embodiment further includes a signal path for transmitting a signal from the high-voltage circuit **30** to the low-voltage circuit **20** will be described.

As shown in FIG. **22**, the first electrode MA of the capacitor **50**A is electrically connected to the transformer **40**A, and the second electrode **52**A of the capacitor **50**A is electrically connected to the high-voltage circuit **30**. The first electrode MB of the capacitor **50**B is electrically connected to the transformer **40**B, and the second electrode **52**B of the capacitor **50**B is electrically connected to the high-voltage circuit **30**. Thus, the transformers **40**A and **40**B each correspond to a first transformer, and the capacitors **50**A and **50**B each correspond to a first capacitor. In other words, the first electrode of the first capacitor is electrically connected to the first transformer, and the second electrode of the first capacitor is electrically connected to the high-voltage circuit.

The set signal output from the low-voltage circuit **20** is transmitted through the transformer **40**A and the capacitor **50**A to the high-voltage circuit **30**. The reset signal output from the low-voltage circuit **20** is transmitted through the transformer **40**B and the capacitor **50**B to the high-voltage circuit **30**. In other words, a first signal output from the low-voltage circuit is transmitted through the first transformer and the first capacitor to the high-voltage circuit.

As shown in FIG. **22**, the gate driver **10** further includes a transformer **40**C, a capacitor **50**C, a low-voltage signal line **21**C, and a high-voltage signal line **31**C. The capacitor **50**C is connected in series to the transformer **40**C. The transformer **40**C corresponds to a second transformer, and the capacitor **50**C corresponds to a second capacitor.

The transformer **40**C insulates the high-voltage circuit **30** from the low-voltage circuit **20** while transmitting a signal from the high-voltage circuit **30** toward the low-voltage circuit **20**. In an example, the signal is for detecting an anomaly in the temperature of the switching element **501** and corresponds to a second signal. The transformer **40**C includes a first coil **41**C and a second coil **42**C that is insulated from and configured to be magnetically coupled to the first coil **41**C.

The first coil **41**C is electrically connected to the high-voltage circuit **30** and is also electrically connected to the ground of the high-voltage circuit **30**. More specifically, the first coil **41**C includes a first end electrically connected to the high-voltage circuit **30** through the capacitor **50**C and a second end electrically connected to the ground of the high-voltage circuit **30**. Thus, the potential of the second end of the first coil **41**C equals the second reference potential. The second reference potential varies as the inverter device **500** is driven and is, for example, greater than or equal to 600 V.

The second coil **42**C is electrically connected to the capacitor **50**C and is also electrically connected to the ground of the low-voltage circuit **20**. More specifically, the second coil **42**C includes a first end electrically connected to the capacitor **50**C and a second end electrically connected to the ground of the low-voltage circuit **20**. Thus, the potential of the second end of the second coil **42**C equals the first reference potential. The first reference potential is, for example, 0 V.

The capacitor **50**C includes a first electrode **51**C and a second electrode **52**C and is electrically connected to the low-voltage circuit **20** and the transformer **40**C by the high-voltage signal line **31**C. More specifically, the first electrode **51**C of the capacitor **50**C is connected to the first end of the first coil **41**C of the transformer **40**C, and the second electrode **52**C of the capacitor **50**C is connected to the low-voltage circuit **20**. In other words, the first electrode of the second capacitor is electrically connected to the first transformer, and the second electrode of the second capacitor is electrically connected to the low-voltage circuit.

The signal (second signal) output from the high-voltage circuit **30** is transmitted through the transformer **40**C and the capacitor **50**C to the low-voltage circuit **20**. In the illustrated example, the transformer **40**C and the capacitor **50**C are arranged in this order in the transmission direction of the signal (second signal).

As described above, in the modified example shown in FIG. **22**, the signals are transmitted bidirectionally between the low-voltage circuit **20** and the high-voltage circuit **30**. The signals include a first signal transmitted from the low-voltage circuit **20** toward the high-voltage circuit **30** and a second signal transmitted from the high-voltage circuit **30** toward the low-voltage circuit **20**.

In the gate driver **10** shown in FIG. **22**, the transformer **40**C may be connected to the low-voltage circuit **20**, and the capacitor **50**C may be connected to the high-voltage circuit **30**. That is, the capacitor **50**C and the transformer **40**C may be arranged in this order in the transmission direction of the signal (second signal).

In the modified example shown in FIG. **22**, the capacitor **50**C may be included in the low-voltage circuit chip **60**. The capacitor **50**C may be included in a capacitor chip. In this case, the capacitor chip is, for example, mounted on a low-voltage die pad.

The transformer **40**C may be included in the transformer chip **80** or a transformer chip arranged separately from the transformer chip **80**. The separate transformer chip is, for example, mounted on the low-voltage die pad **91**. When the configuration of the modified example shown in FIG. **22** is applied to the third and fifth embodiments, the capacitor **50**C and the transformer **40**C may be changed in the same manner.

When the configuration of the modified example shown in FIG. **22** is applied to the second embodiment, the capacitor **50**C is included in a capacitor chip arranged separately from the capacitor chip **120**. The separate capacitor chip is, for example, mounted on the low-voltage die pad **91**.

When the configuration of the modified example shown in FIG. **22** is applied to the fourth embodiment, the capacitor **50**C may be included in the capacitor chip **120**. Alternatively, the capacitor **50**C may be included in a capacitor chip

arranged separately from the capacitor chip **120**. The separate capacitor chip is, for example, mounted on the low-voltage die pad **91**.

The transformer **40**C may be included in the transformer chip **80**. Alternatively, the transformer **40**C may be included in a transformer chip arranged separately from the transformer chip **80**. The separate transformer chip is, for example, mounted on the low-voltage die pad **91**.

When the configuration of the modified example shown in FIG. **22** is applied to the sixth to eighth embodiments, the capacitor **50**C may be included in a capacitor chip arranged separately from the capacitor chip **120**. The separate capacitor chip is, for example, mounted on the low-voltage die pad **91**.

The transformer **40**C may be included in a transformer chip arranged separately from the transformer chip **80**. The separate transformer chip is, for example, mounted on the high-voltage die pad **101**.

In the embodiments, the transformer **40** is a base insulation, and the capacitor **50** is an additional insulation. Alternatively, the capacitor **50** may be a base insulation, and the transformer **40** may be an additional insulation.

CLAUSES

The technical aspects that are understood from the embodiments and the modified examples will be described below.

[Clause A1] A gate driver that is configured to apply a drive voltage signal to a gate of a switching element, the gate driver including: a low-voltage circuit configured to be actuated by application of a first voltage; a high-voltage circuit configured to be actuated by application of a second voltage that is higher than the first voltage; a transformer; and a capacitor connected in series to the transformer, where the low-voltage circuit and the high-voltage circuit are connected by the transformer and the capacitor and configured to transmit a signal through the transformer and the capacitor.

[Clause A2] The gate driver according to clause A1, where the transformer includes a first transformer and a second transformer that are connected in series, the second transformer connects the first transformer and the high-voltage circuit, the capacitor includes a first electrode and a second electrode, the first electrode is electrically connected to the second transformer, and the second electrode is electrically connected to the high-voltage circuit and connected in series to the second transformer.

[Clause A3] The gate driver according to clause A2, further including a high-voltage circuit chip that includes the high-voltage circuit, where the capacitor is incorporated in the high-voltage circuit chip.

[Clause A4] The gate driver according to clause A3, further including: a low-voltage circuit chip that includes the low-voltage circuit; a first transformer chip that includes the first transformer; a second transformer chip that includes the second transformer; a low-voltage die pad on which the low-voltage circuit chip is mounted; and a high-voltage die pad on which the high-voltage circuit chip is mounted, where the first transformer chip is mounted on the low-voltage die pad, and the second transformer chip is mounted on the high-voltage die pad.

[Clause A5] The gate driver according to clause A3, further including: a low-voltage circuit chip that includes the low-voltage circuit; a first transformer chip that includes the first transformer; a second transformer chip that includes the second transformer; a low-voltage die pad on which the low-voltage circuit chip is mounted; and a high-voltage die pad on which the high-voltage circuit chip is mounted, where both the first transformer chip and the second transformer chip are mounted on the low-voltage die pad or the high-voltage die pad.

[Clause A6] The gate driver according to clause A2, further including: a low-voltage circuit chip that includes the low-voltage circuit; and a high-voltage circuit chip that includes the high-voltage circuit, a first transformer chip that includes the first transformer; a second transformer chip that includes the second transformer; and a capacitor chip that includes the capacitor, where the low-voltage circuit chip, the first transformer chip, the second transformer chip, the capacitor chip, and the high-voltage circuit chip are arranged in this order.

[Clause A7] The gate driver according to clause A1, where the transformer includes a first transformer and a second transformer that are connected in series, the first transformer connects the second transformer and the low-voltage circuit, the capacitor includes a first electrode and a second electrode, the first electrode is electrically connected to the first transformer, and the second electrode is electrically connected to the low-voltage circuit and connected in series to the first transformer.

[Clause A8] The gate driver according to clause A7, further including a low-voltage circuit chip that includes the low-voltage circuit, where the capacitor is incorporated in the low-voltage circuit chip.

[Clause A9] The gate driver according to clause A8, further including: a high-voltage circuit chip that includes the high-voltage circuit, a first transformer chip that includes the first transformer; a second transformer chip that includes the second transformer; a low-voltage die pad on which the low-voltage circuit chip is mounted; and a high-voltage die pad on which the high-voltage circuit chip is mounted, where the first transformer chip is mounted on the low-voltage die pad, and the second transformer chip is mounted on the high-voltage die pad.

[Clause A10] The gate driver according to clause A8, further including: a high-voltage circuit chip that includes the high-voltage circuit, a first transformer chip that includes the first transformer; a second transformer chip that includes the second transformer; a low-voltage die pad on which the low-voltage circuit chip is mounted; and a high-voltage die pad on which the high-voltage circuit chip is mounted, where both the first transformer chip and the second transformer chip are mounted on the low-voltage die pad or the high-voltage die pad.

[Clause A11] The gate driver according to clause A7, further including: a low-voltage circuit chip that includes the low-voltage circuit; a high-voltage circuit chip that includes the high-voltage circuit; a first transformer chip that includes the first transformer; a second transformer chip that includes the second transformer; and a capacitor chip that includes the capacitor, where the low-voltage circuit chip, the capacitor chip, the first transformer chip, the second transformer chip, and the high-voltage circuit chip are arranged in this order.

[Clause A12] The gate driver according to any one of clauses A1 to A11, where the low-voltage circuit generates a first signal for generating the drive voltage signal based on an external instruction, and the high-voltage circuit generates the drive voltage signal based on the first signal.

[Clause A13] The gate driver according to any one of clauses A1 to A12, where the capacitor includes capacitors that are connected in series.

[Clause A14] The gate driver according to any one of clauses A1 to A13, where the capacitor has an insulation voltage that is greater than or equal to 200 Vrms.

[Clause B1] An insulation module used to insulate a low-voltage circuit from a high-voltage circuit, the low-voltage circuit and the high-voltage circuit being included in a gate driver that is configured to apply a drive voltage signal to a gate of a switching element, the insulation module including: a transformer; and a capacitor connected in series to the transformer, where the low-voltage circuit and the high-voltage circuit are configured to be connected by the transformer and the capacitor, and the transformer and the capacitor are used to transmit a signal between the low-voltage circuit and the high-voltage circuit.

[Clause B2] The insulation module according to clause B1, further including: a transformer chip that includes the transformer; and a capacitor chip that includes the capacitor.

[Clause B3] The insulation module according to clause B2, further including: a first die pad on which the transformer chip is mounted; a first lead electrically connected to the transformer; a second die pad on which the capacitor chip is mounted, and a second lead electrically connected to the capacitor.

[Clause B4] The insulation module according to clause B2, further including: a common die pad on which the transformer chip and the capacitor chip are mounted; a first lead electrically connected to the transformer; and a second lead electrically connected to the capacitor.

Various changes in form and details may be made to the examples above without departing from the spirit and scope of the claims and their equivalents. The examples are for the sake of description only, and not for purposes of limitation. Descriptions of features in each example are to be considered as being applicable to similar features or aspects in other examples. Suitable results may be achieved if sequences are performed in a different order, and/or if components in a described system, architecture, device, or circuit are combined differently, and/or replaced or supplemented by other components or their equivalents. The scope of the disclosure is not defined by the detailed description, but by the claims and their equivalents. All variations within the scope of the claims and their equivalents are included in the disclosure.

The invention claimed is:

1. A gate driver that is configured to apply a drive voltage signal to a gate of a switching element, the gate driver comprising:

a low-voltage circuit configured to be actuated by application of a first voltage;

a high-voltage circuit configured to be actuated by application of a second voltage that is higher than the first voltage;

a transformer;

a capacitor connected in series to the transformer;

a low-voltage circuit chip that includes the low-voltage circuit;

a high-voltage circuit chip that includes the high-voltage circuit;

a transformer chip that includes the transformer;

a capacitor chip that includes the capacitor;

a low-voltage die pad on which the low-voltage circuit chip is mounted; and

a high-voltage die pad on which the high-voltage circuit chip is mounted,

wherein the low-voltage circuit and the high-voltage circuit are connected by the transformer and the capacitor and configured to transmit a signal through the transformer and the capacitor,

the transformer chip is mounted on the low-voltage die pad or the high-voltage die pad, and

the capacitor chip is mounted on the low-voltage die pad or the high-voltage die pad.

2. The gate driver according to claim **1**, wherein

the capacitor includes a first electrode and a second electrode,

the first electrode is electrically connected to the transformer, and

the second electrode is electrically connected to the high-voltage circuit.

3. The gate driver according to claim **1**,

wherein the transformer chip is mounted on the low-voltage die pad.

4. The gate driver according to claim **2**,

wherein the low-voltage circuit chip, the transformer chip, the capacitor chip, and the high-voltage circuit chip are arranged in this order.

5. The gate driver according to claim **4**,

wherein

the transformer chip is mounted on the low-voltage die pad, and

the capacitor chip is mounted on the high-voltage die pad.

6. The gate driver according to claim **4**,

wherein both the transformer chip and the capacitor chip are mounted on the low-voltage die pad or the high-voltage die pad.

7. The gate driver according to claim **1**, wherein

the capacitor includes a first electrode and a second electrode,

the first electrode is electrically connected to the low-voltage circuit, and

the second electrode is electrically connected to the transformer.

8. The gate driver according to claim **7**,

wherein the low-voltage circuit chip, the capacitor chip, the transformer chip, and the high-voltage circuit chip are arranged in this order.

9. The gate driver according to claim **8**,

wherein both the capacitor chip and the transformer chip are mounted on the low-voltage die pad.

10. The gate driver according to claim **8**,

wherein

the capacitor chip is mounted on the low-voltage die pad, and

the transformer chip is mounted on the high-voltage die pad.

11. The gate driver according to claim **1**, wherein

the capacitor includes a low-voltage capacitor and a high-voltage capacitor,

the low-voltage capacitor includes a first low-voltage electrode and a second low-voltage electrode,

the first low-voltage electrode is electrically connected to the low-voltage circuit,

the second low-voltage electrode is electrically connected to the transformer,

the high-voltage capacitor includes a first high-voltage electrode and a second high-voltage electrode,

the first high-voltage electrode is electrically connected to the transformer, and

the second high-voltage electrode is electrically connected to the high-voltage circuit.

12. The gate driver according to claim **1**, wherein

the capacitor includes a first capacitor and a second capacitor,

the transformer includes a first transformer and a second transformer,

the first capacitor is connected in series to the first transformer,

the signal includes a first signal transmitted from the low-voltage circuit to the high-voltage circuit,

the first signal output from the low-voltage circuit is transmitted through the first transformer and the first capacitor to the high-voltage circuit,

the second capacitor is connected in series to the second transformer,

the signal includes a second signal transmitted from the high-voltage circuit to the low-voltage circuit, and

the second signal output from the high-voltage circuit is transmitted through the second transformer and the second capacitor to the low-voltage circuit.

13. The gate driver according to claim **12**, wherein

each of the first capacitor and the second capacitor includes a first electrode and a second electrode,

the first electrode of the first capacitor is electrically connected to the first transformer,

the second electrode of the first capacitor is electrically connected to the high-voltage circuit,

the first electrode of the second capacitor is electrically connected to the second transformer, and

the second electrode of the second capacitor is electrically connected to the low-voltage circuit.

* * * * *