US012388211B2

(12) **United States Patent**
Dawson et al.

(10) **Patent No.: US 12,388,211 B2**
(45) **Date of Patent: Aug. 12, 2025**

(54) **ELECTRICAL CONNECTOR SYSTEM WITH CYLINDRICAL TERMINAL BODY**

(71) Applicant: **Eaton Intelligent Power Limited**, Dublin (IE)

(72) Inventors: **James Dawson**, Carol Stream, IL (US); **Jason Degen**, Carol Stream, IL (US); **Brantley Natter**, Carol Stream, IL (US); **Mohamad Zeidan**, Carol Stream, IL (US); **Slobodan Pavlovic**, Carol Stream, IL (US)

(73) Assignee: **Eaton Intelligent Power Limited**, Dublin (IE)

(*) Notice: Subject to any disclaimer, the term of this patent is extended or adjusted under 35 U.S.C. 154(b) by 87 days.

(21) Appl. No.: **18/102,712**

(22) Filed: **Jan. 28, 2023**

(65) **Prior Publication Data**

US 2023/0178920 A1 Jun. 8, 2023

Related U.S. Application Data

(63) Continuation of application No. PCT/US2021/043788, filed on Jul. 29, 2021.

(Continued)

(51) **Int. Cl.**
H01R 13/15 (2006.01)
B60R 16/03 (2006.01)

(Continued)

(52) **U.S. Cl.**
CPC ***H01R 13/44*** (2013.01); ***B60R 16/03*** (2013.01); ***H01R 13/052*** (2013.01); ***H01R 13/15*** (2013.01);

(Continued)

(58) **Field of Classification Search**
CPC H01R 13/44; H01R 13/052; H01R 13/15; H01R 13/18; H01R 13/187; H01R 13/42;

(Continued)

(56) **References Cited**

U.S. PATENT DOCUMENTS

5,951,336 A * 9/1999 Seko H01R 13/432 439/748
7,651,344 B2 * 1/2010 Wu H01R 13/6585 439/910

(Continued)

FOREIGN PATENT DOCUMENTS

WO 2019164536 A1 8/2019
WO 2019236976 A1 12/2019

(Continued)

OTHER PUBLICATIONS

Office Action issued for Korean Application No. 10-2023-7006315, dated Aug. 22, 2024.

Primary Examiner — Thanh Tam T Le
(74) *Attorney, Agent, or Firm* — Meunier Carlin & Curfman LLC

(57) **ABSTRACT**

A connector system for electrically connecting a power source to other power distribution components or assemblies, for example in a motor vehicle. This connector system includes a male connector assembly with an electrically conductive male terminal assembly having a male terminal body and an internal spring assembly. The male terminal body includes contact arms with irregular outer peripheries configured to reduce the insertion force associated with the male terminal body. The internal spring assembly includes a spring member and a spring holder that ensures and maintains proper relative positioning or alignment of the internal spring member within the male terminal assembly. The connector system also includes a female connector assembly

(Continued)

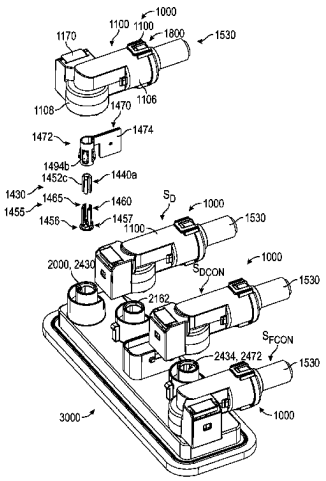

with a female terminal assembly that receives the male terminal assembly and the spring assembly.

32 Claims, 25 Drawing Sheets

Related U.S. Application Data

(60) Provisional application No. 63/058,061, filed on Jul. 29, 2020.

(51) **Int. Cl.**

H01R 13/05	(2006.01)
H01R 13/187	(2006.01)
H01R 13/42	(2006.01)
H01R 13/428	(2006.01)
H01R 13/44	(2006.01)
H01R 13/631	(2006.01)
H01R 13/641	(2006.01)

(52) **U.S. Cl.**
CPC ***H01R 13/187*** (2013.01); ***H01R 13/42*** (2013.01); ***H01R 13/428*** (2013.01); ***H01R 13/631*** (2013.01); ***H01R 13/641*** (2013.01); *H01R 2201/26* (2013.01)

(58) **Field of Classification Search**
CPC .. H01R 13/428; H01R 13/631; H01R 13/641; H01R 2201/26; B60R 16/03
See application file for complete search history.

(56) **References Cited**

U.S. PATENT DOCUMENTS

9,293,852	B2 *	3/2016	Glick	H01R 13/18
9,379,470	B2 *	6/2016	Glick	H01R 13/18
9,437,974	B2	9/2016	Glick et al.	
9,444,205	B2 *	9/2016	Rangi	H01R 24/86
9,653,859	B1	5/2017	Moore et al.	
9,905,953	B1 *	2/2018	Pavlovic	H01R 13/187
10,193,247	B1 *	1/2019	Glick	H01R 13/18
10,283,889	B2 *	5/2019	Glick	H01R 13/11
10,396,482	B2 *	8/2019	Glick	H01R 13/08
10,693,252	B2	6/2020	Pavlovic et al.	
11,069,999	B2 *	7/2021	Fisher	H01R 13/08
2015/0074996	A1	3/2015	Glick et al.	

FOREIGN PATENT DOCUMENTS

WO	2019237009	A1	12/2019
WO	2019237046	A1	12/2019
WO	2020150399	A1	7/2020
WO	2020154330	A1	7/2020
WO	2021050499	A1	3/2021
WO	2021050609	A1	3/2021
WO	2022026695	A1	2/2022
WO	2022040636	A1	2/2022
WO	2022055568	A1	3/2022
WO	2022098799	A2	5/2022
WO	2023288138	A2	1/2023

* cited by examiner

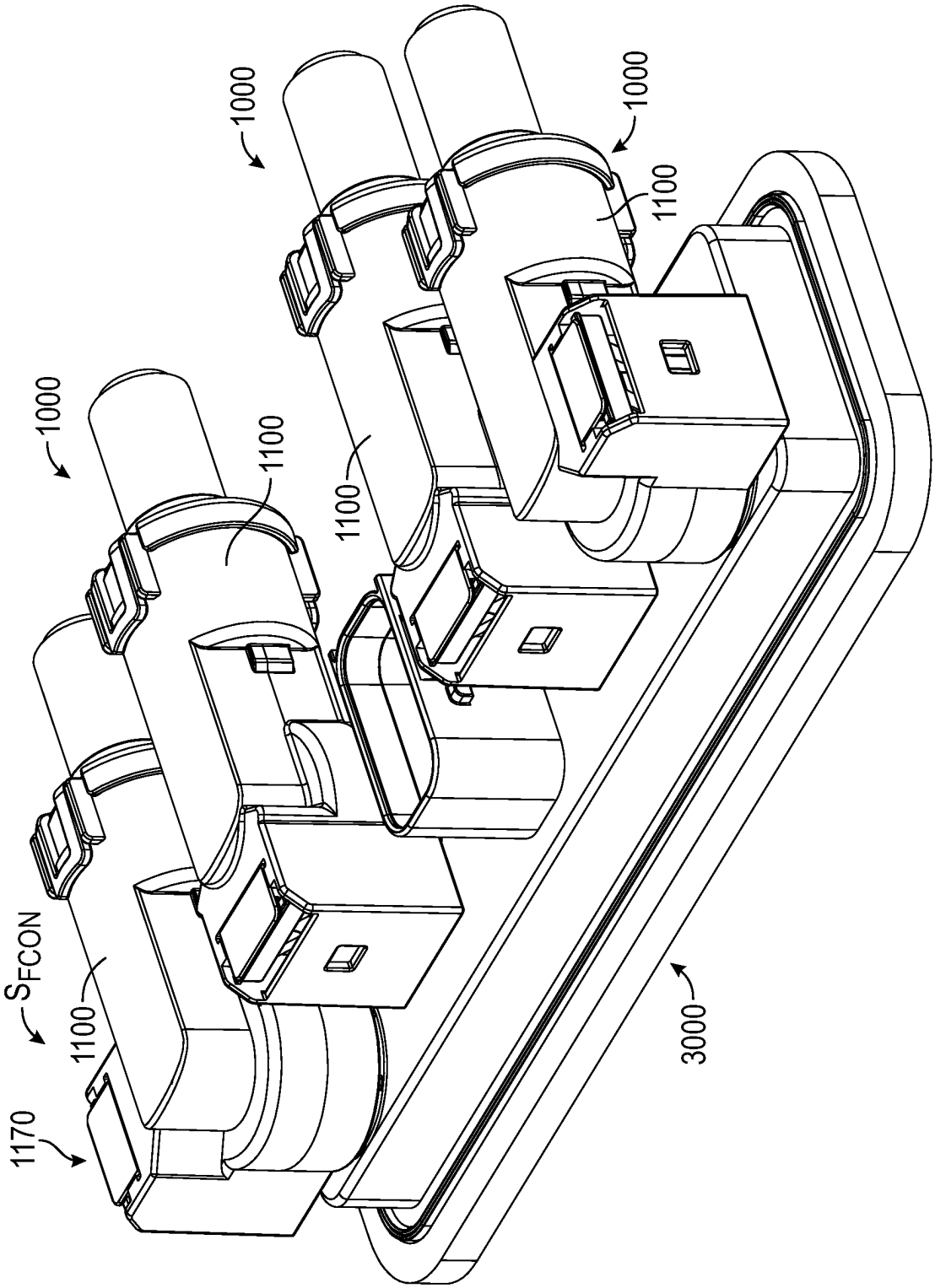

FIG. 1

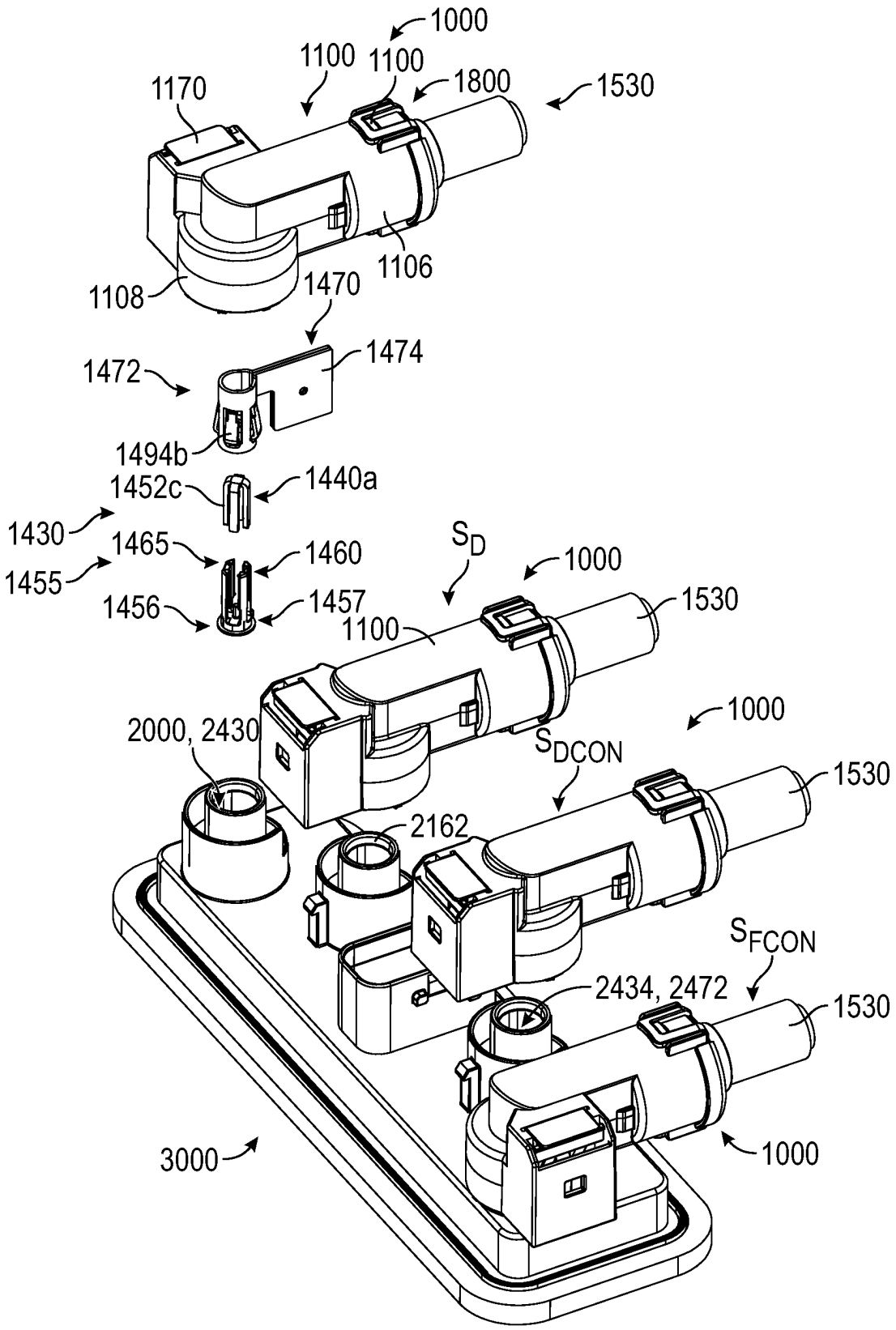
1000
1100
1100
1800
1530
1170
1106
1108
1470
1474
1472
1494b
1452c
1440a
1430
1465
1460
1455
1456
1457
S_D
1000
1530
1100
1000
2000, 2430
S_{DCON}
1530
2162
S_{FCON}
2434, 2472
1530
3000
1000

FIG. 2

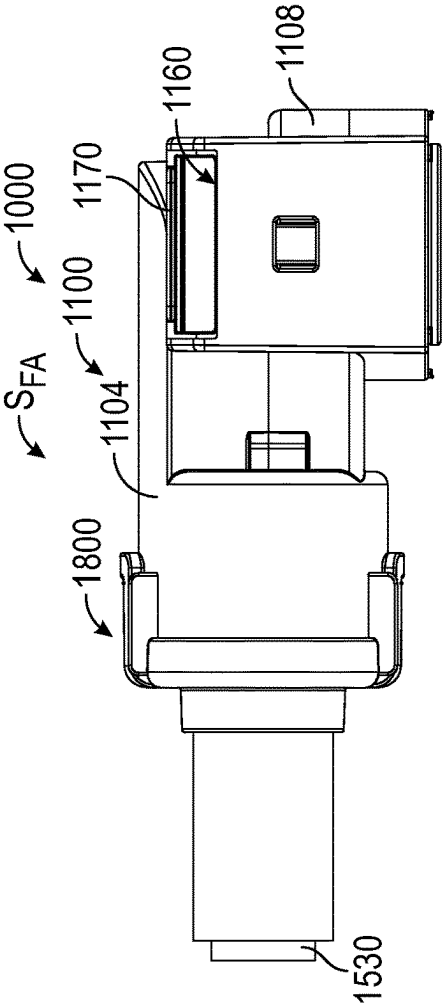
1108
1160
1170
1000
1100
S_{FA}
1104
1800
1530

FIG. 4

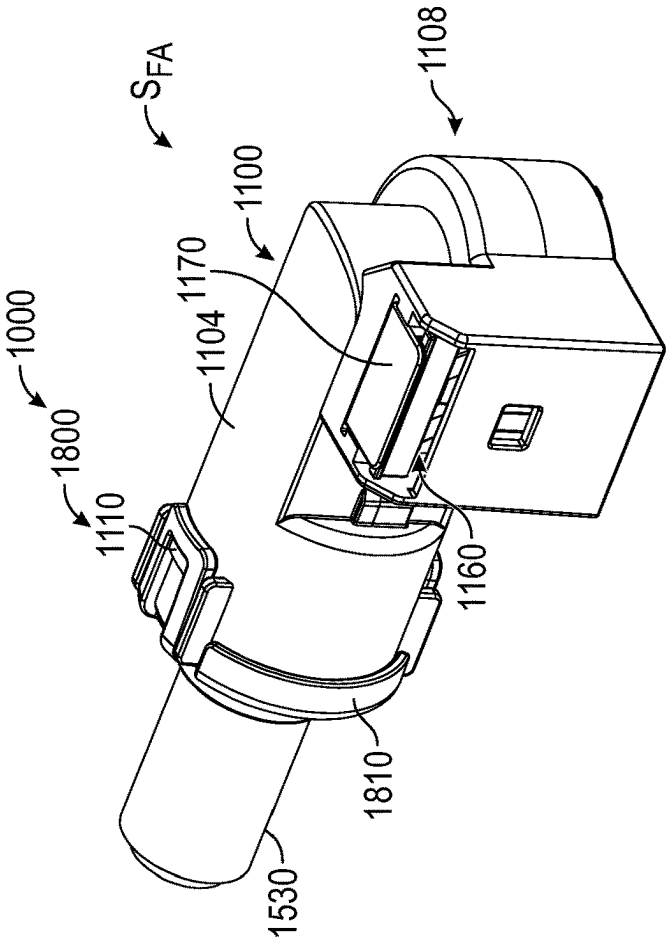
S_{FA}
1108
1100
1170
1104
1000
1800
1110
1160
1810
1530

FIG. 3

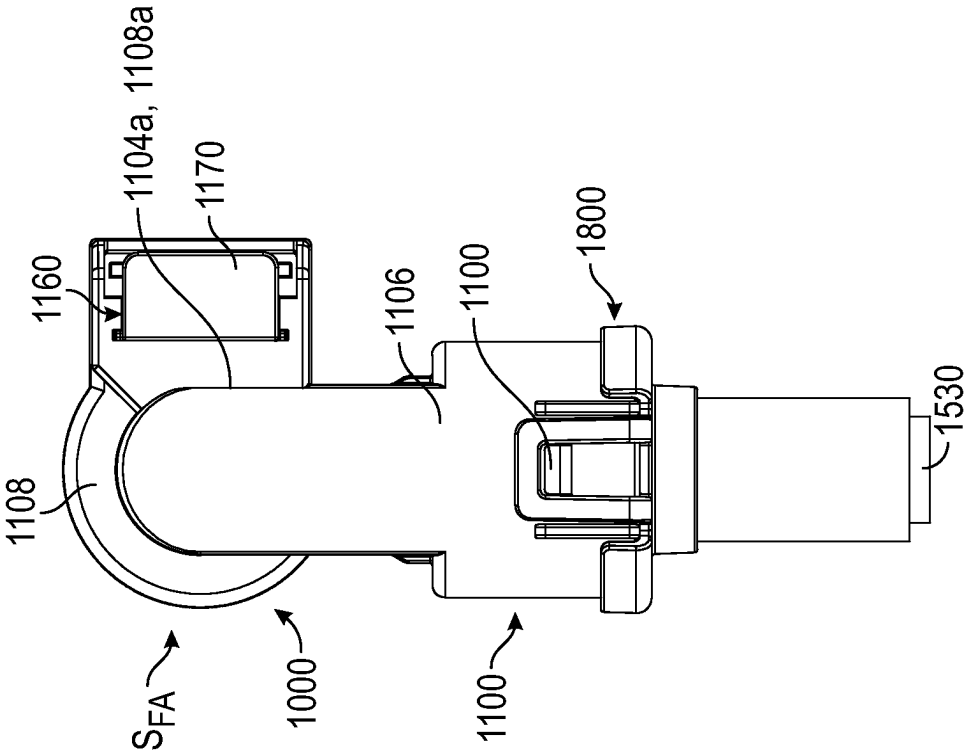
1104a, 1108a
1170
1160
1108
1106
1100
1800
1530
S_{FA}
1000
1100

FIG. 6

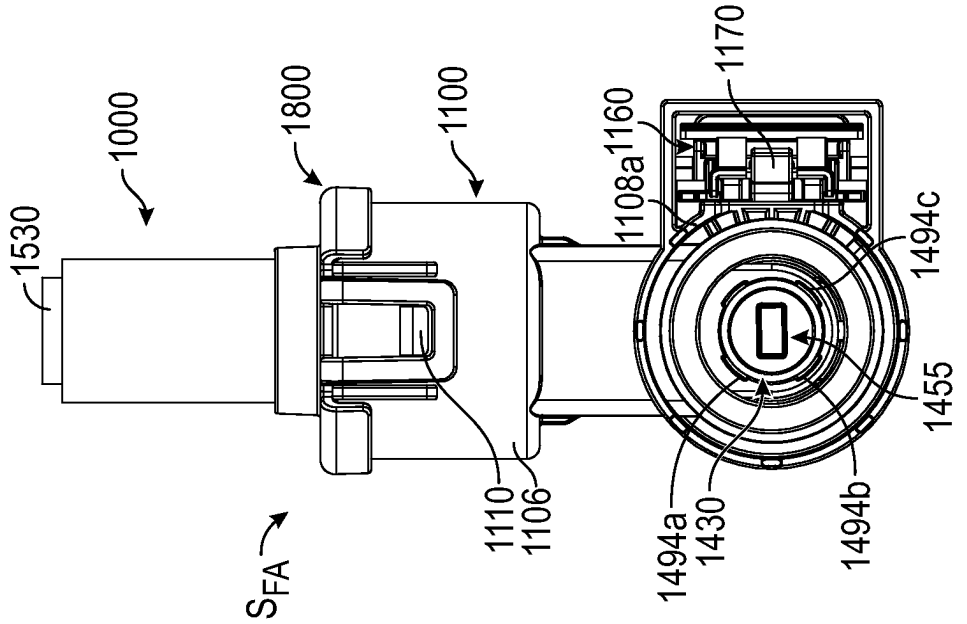
1530
1000
1800
1100
1170
1160
1108a
1494c
1455
1494b
1430
1494a
1110
1106
S_{FA}

FIG. 5

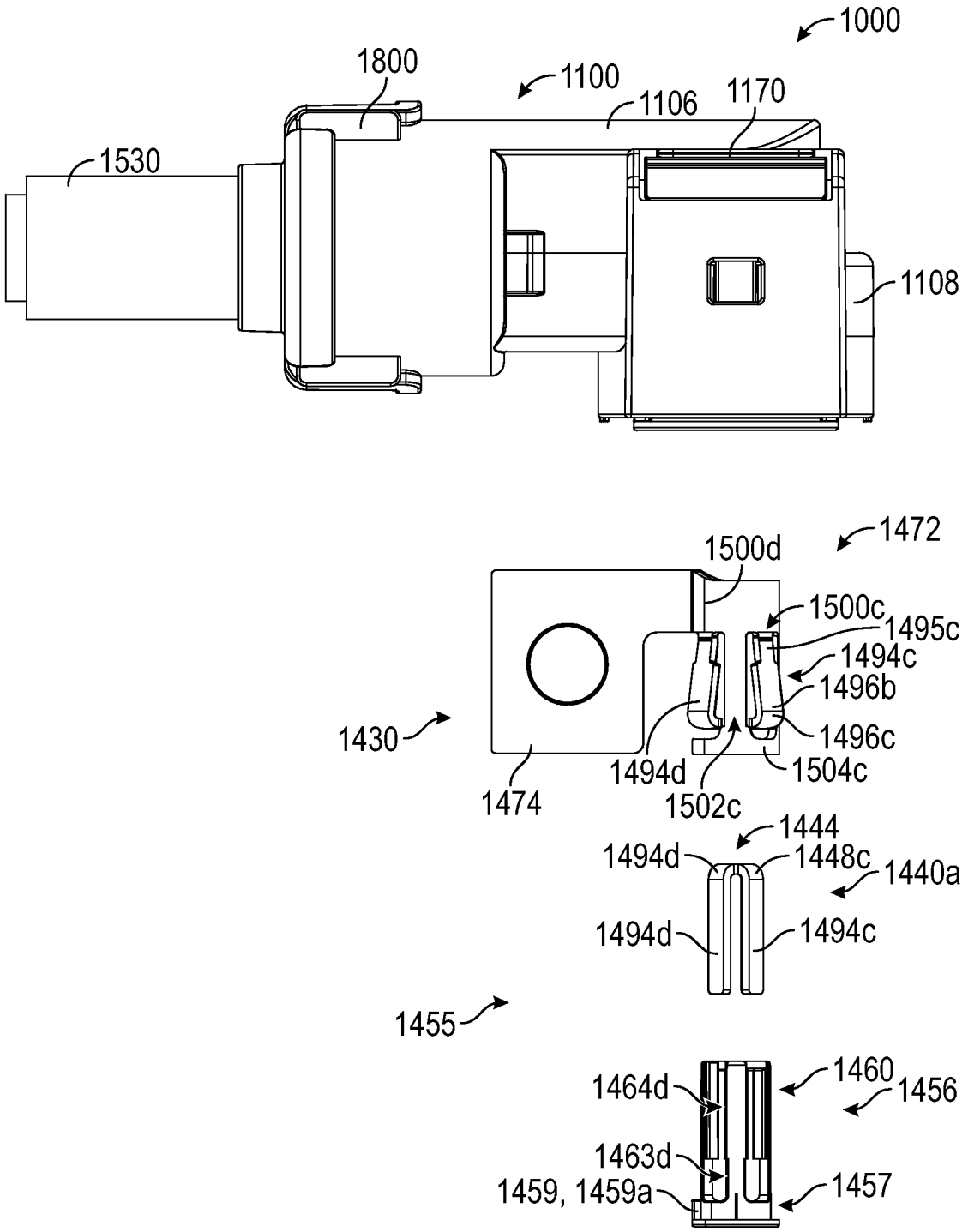
1000
1800
1100
1106
1170
1530
1108
1472
1500d
1500c
1495c
1494c
1496b
1430
1496c
1494d
1504c
1474
1502c
1444
1494d
1448c
1440a
1494d
1494c
1455
1460
1464d
1456
1463d
1459, 1459a
1457

FIG. 7

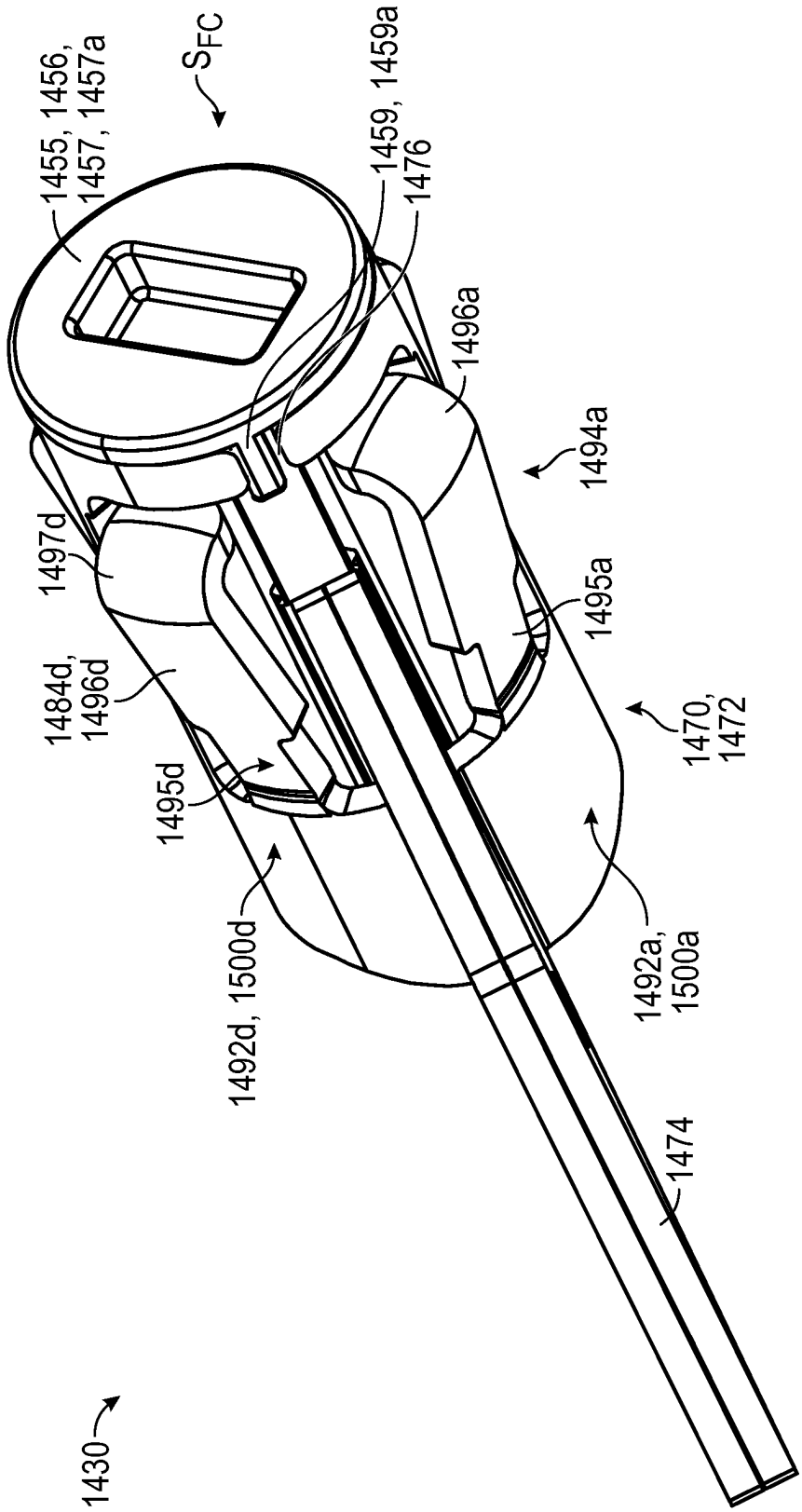
1455, 1456,
1457, 1457a
S_{FC}
1459, 1459a
1476
1496a
1494a
1497d
1495a
1484d,
1496d
1470,
1472
1495d
1492d, 1500d
1492a,
1500a
1474
1430

FIG. 8

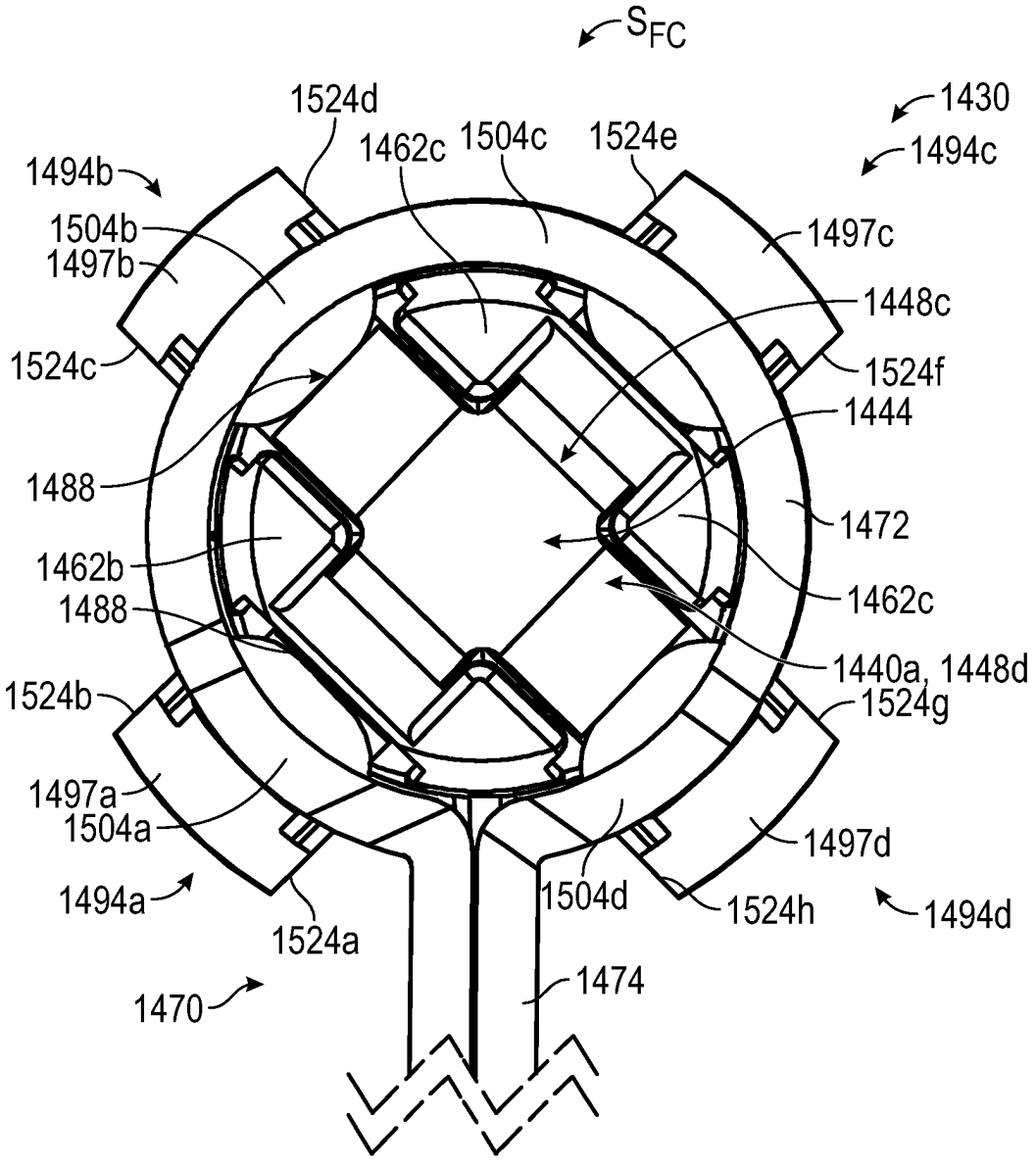
S_{FC}
1430
1494c
1524d
1462c
1504c
1524e
1494b
1504b
1497b
1497c
1448c
1524c
1524f
1444
1488
1472
1462b
1462c
1488
1440a, 1448d
1524b
1524g
1497a
1504a
1497d
1494a
1504d
1524h
1494d
1524a
1474
1470

FIG. 9

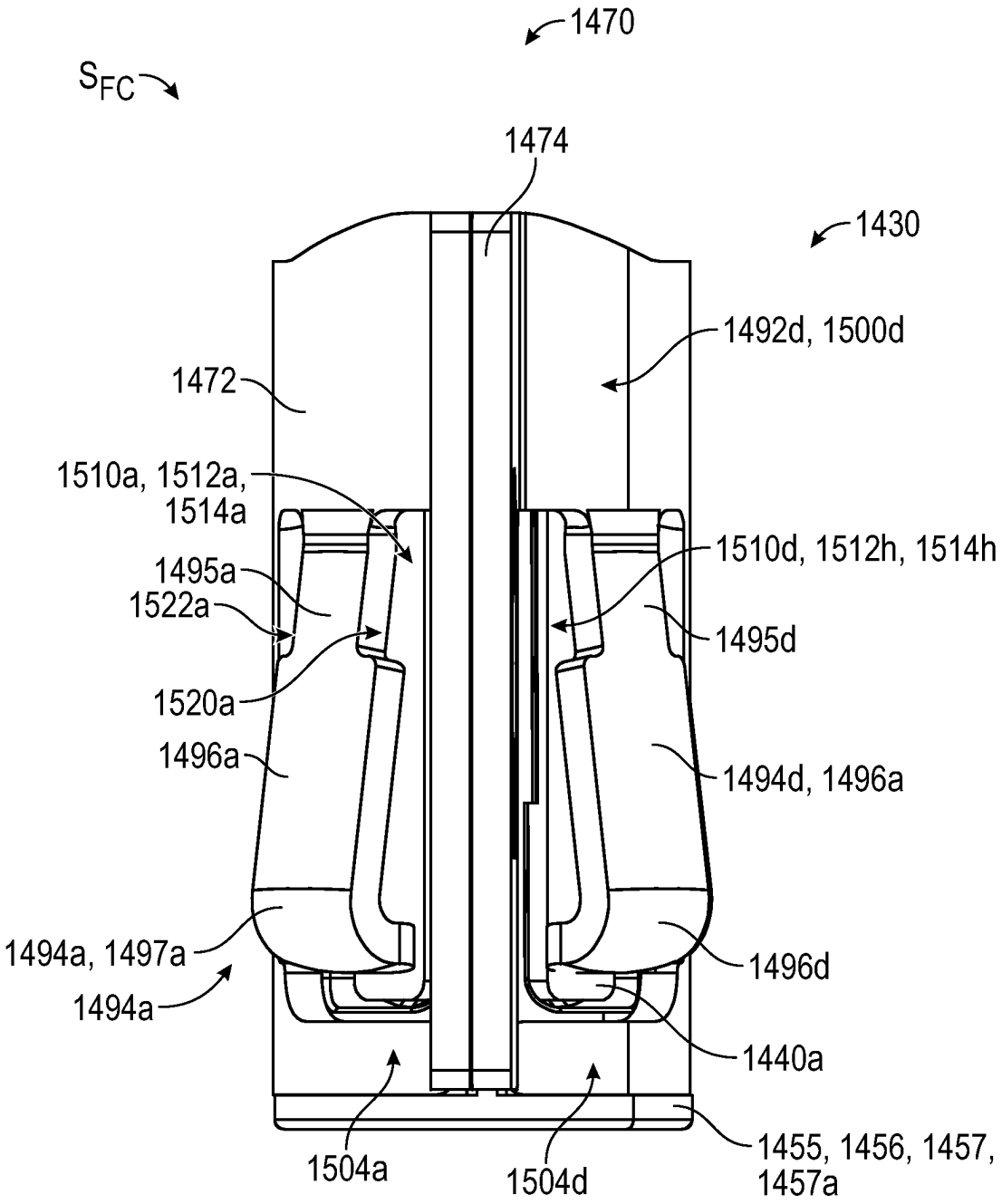
1470
S_{FC}
1474
1430
1492d, 1500d
1472
1510a, 1512a, 1514a
1510d, 1512h, 1514h
1495a
1522a
1495d
1520a
1496a
1494d, 1496a
1494a, 1497a
1496d
1494a
1440a
1504a
1504d
1455, 1456, 1457, 1457a

FIG. 10

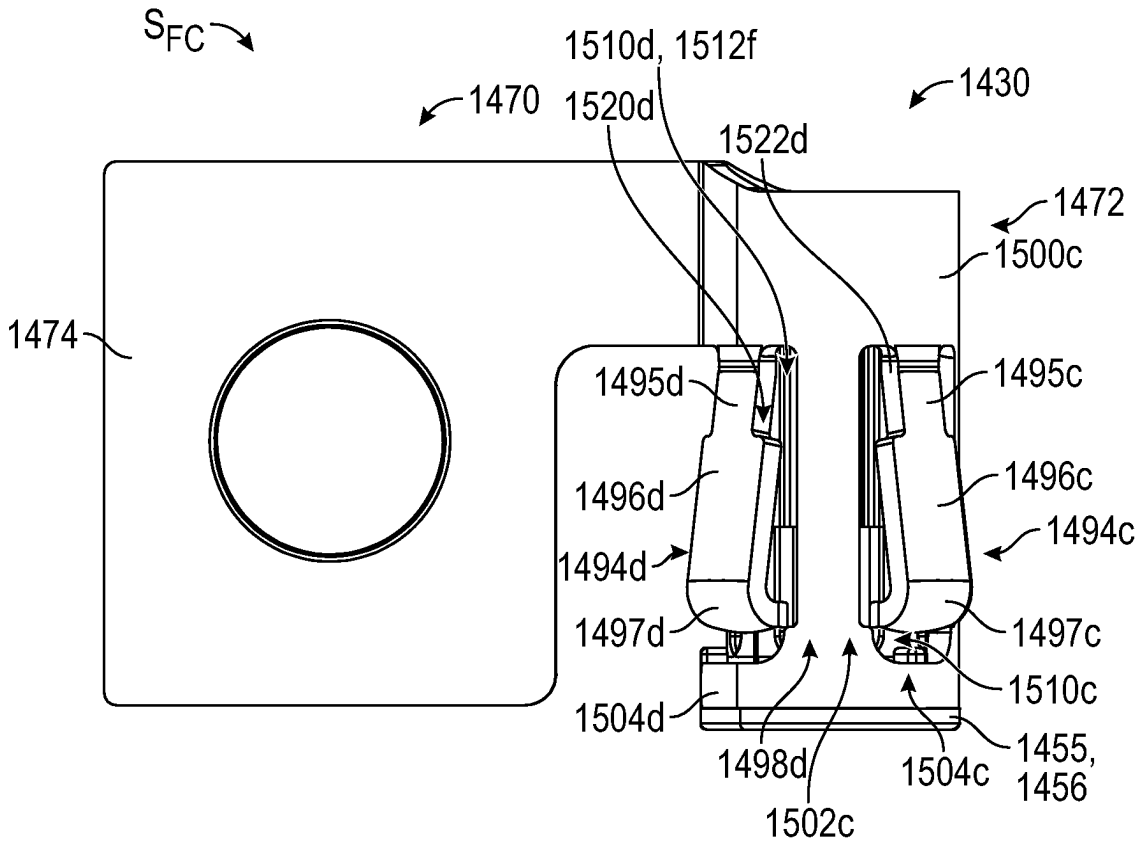
S_{FC}
1510d, 1512f
1470
1520d
1430
1522d
1472
1500c
1474
1495d
1495c
1496d
1496c
1494d
1494c
1497d
1497c
1510c
1504d
1455,
1456
1498d
1504c
1502c

FIG. 11

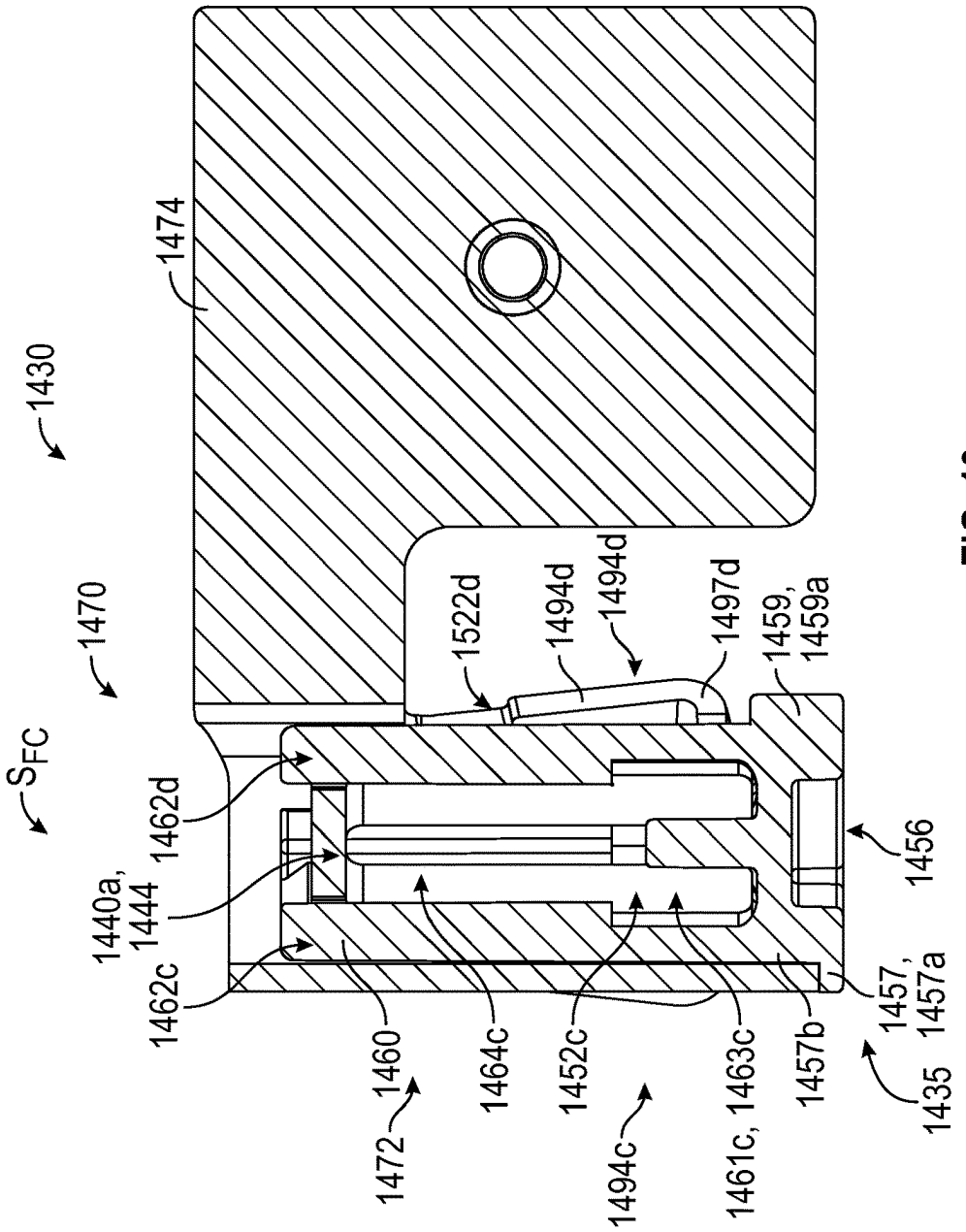
1474
1430
1470
S_{FC}
1462d
1440a,
1444
1462c
1460
1472
1464c
1452c
1494c
1461c, 1463c
1457b
1435
1457,
1457a
1456
1459,
1459a
1497d
1494d
1494d
1522d

FIG. 13

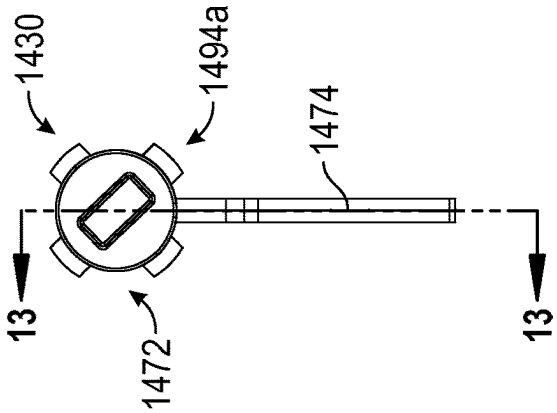
1430
1494a
1474
13
13
1472

FIG. 12

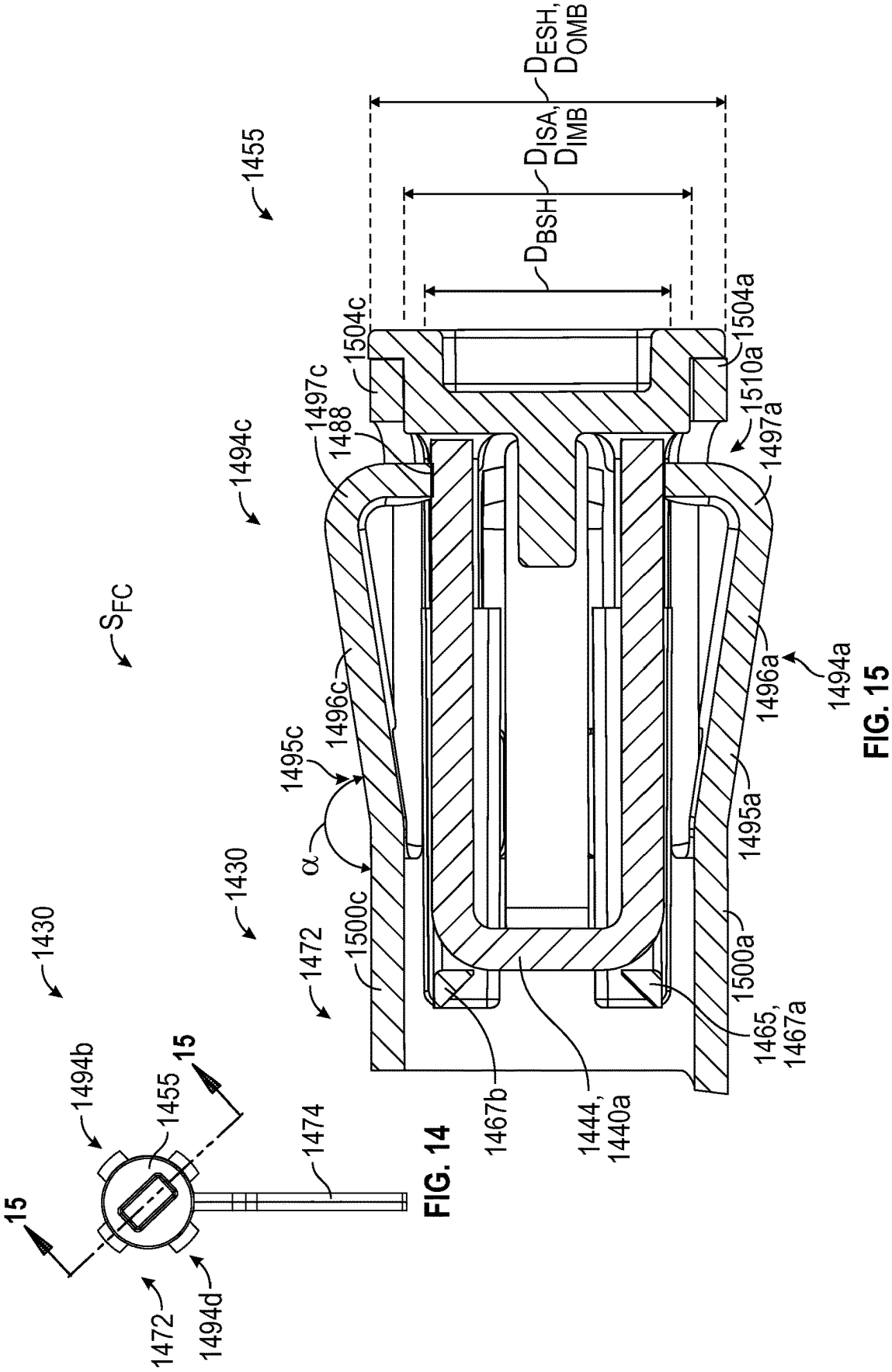

1455
D_{ESH}, D_{OMB}
D_{ISA}, D_{IMB}
D_{BSH}
1504c
1504a
1510a
1497c
1488
1497a
1494c
S_{FC}
1496c
1496a
1494a
1495c
1495a
α
1430
1472
1500c
1500a
1465, 1467a
1467b
1444, 1440a
1430
1494b
1455
15
15
1474
1472
1494d

FIG. 15

FIG. 14

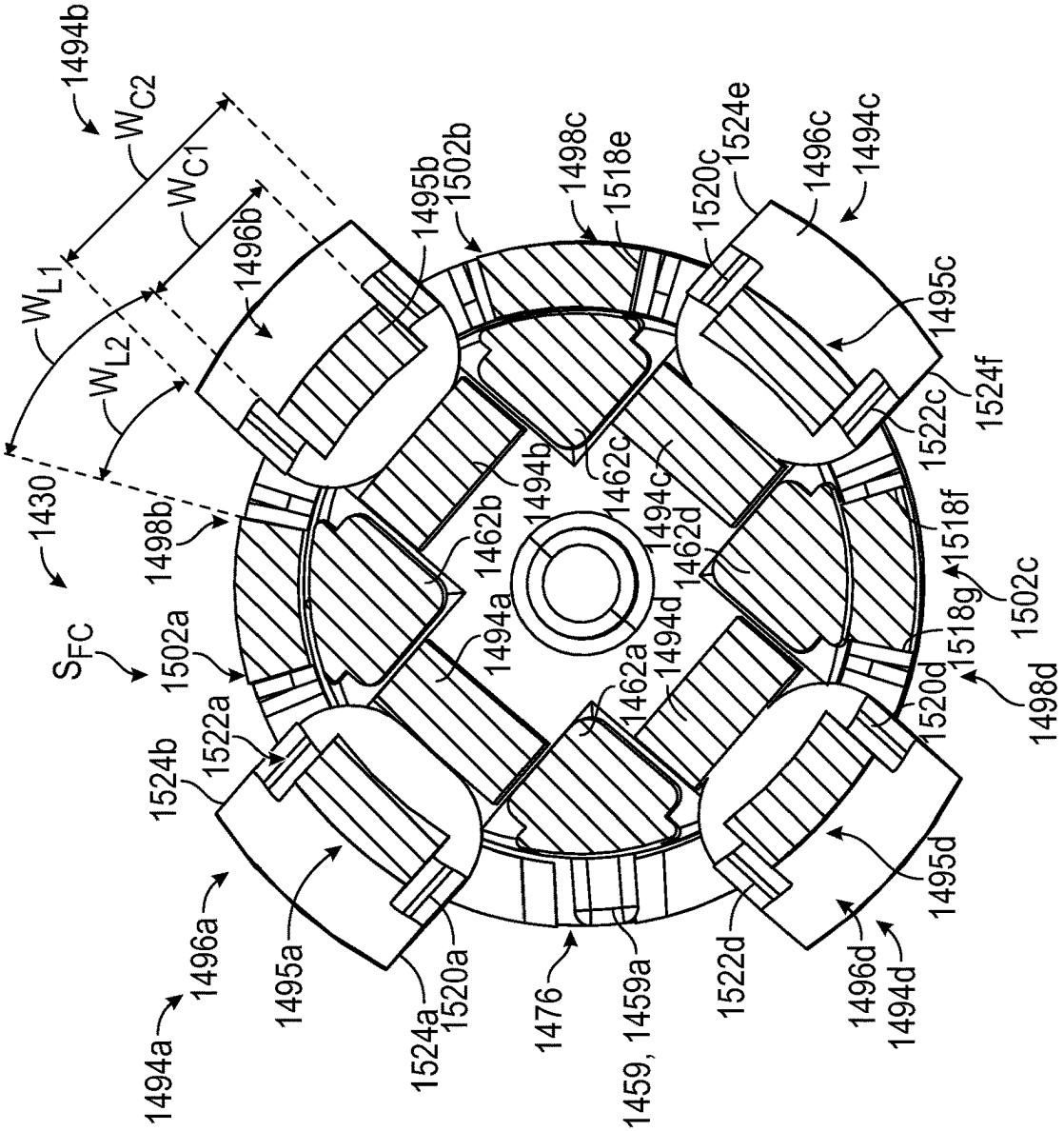
1494b
W_{C2}
W_{C1}
W_{L1}
W_{L2}
1496b
1430
1498b
S_{FC}
1502a
1522a
1524b
1496a
1494a
1495a
1524a
1520a
1476
1459, 1459a
1522d
1496d
1494d
1495d
1520d
1518g
1498d
1502c
1518f
1522c
1524f
1495c
1496c
1494c
1524e
1520c
1518e
1498c
1495b
1502b
1494b
1462c
1494c
1462d
1494d
1462a
1494a
1462b

FIG. 17

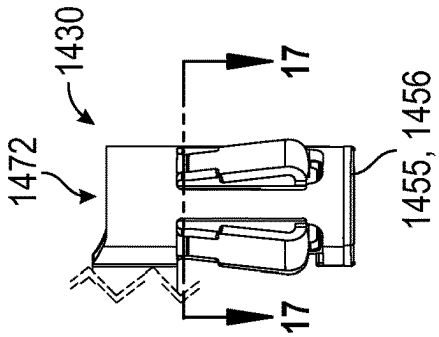
1430
1472
17
17
1455, 1456

FIG. 16

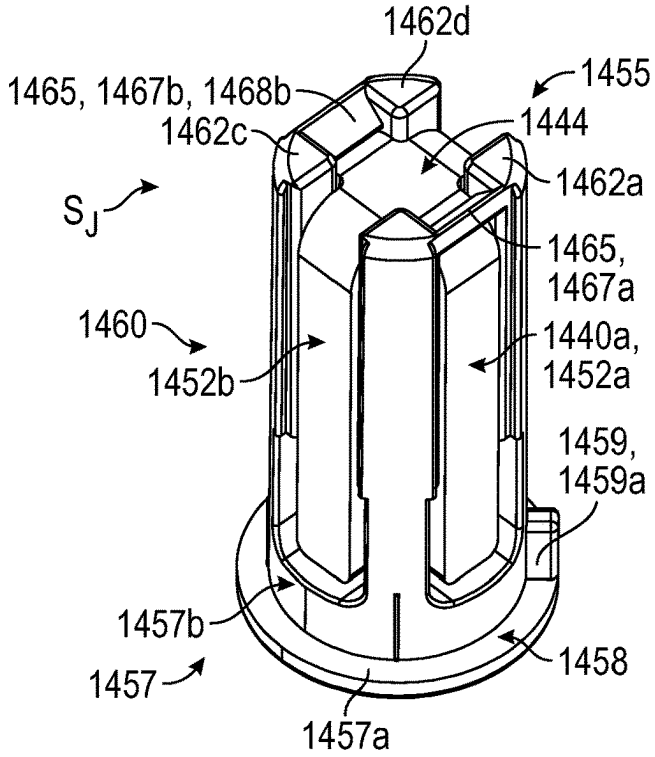

FIG. 18

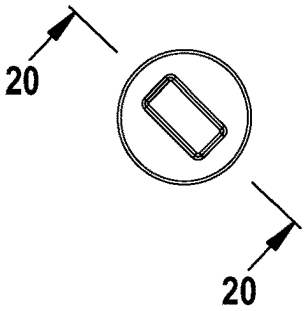

FIG. 19

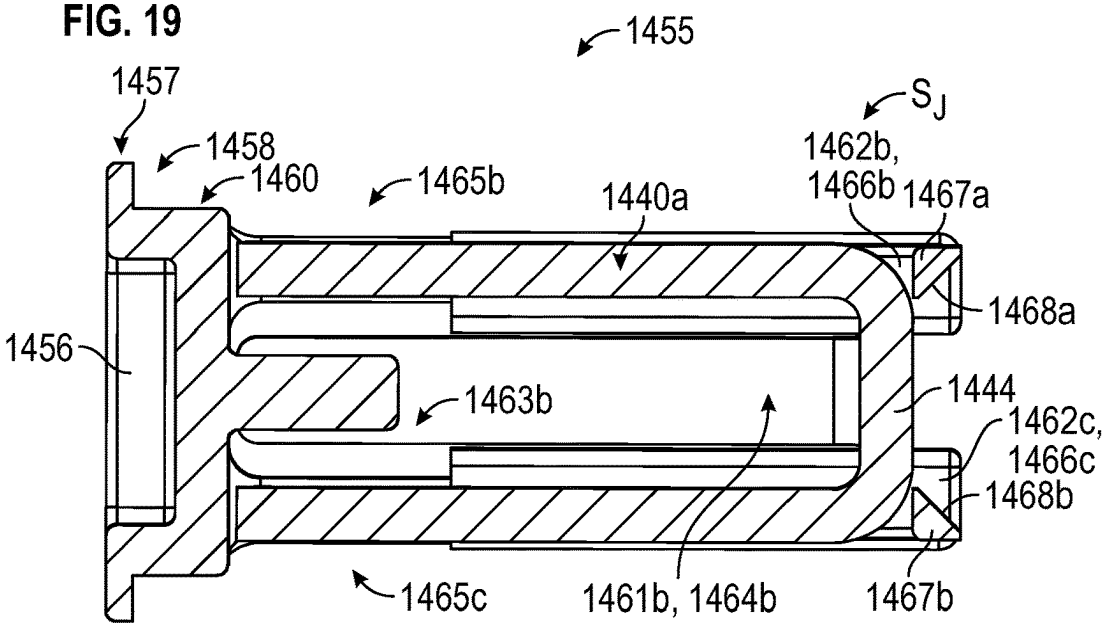

FIG. 20

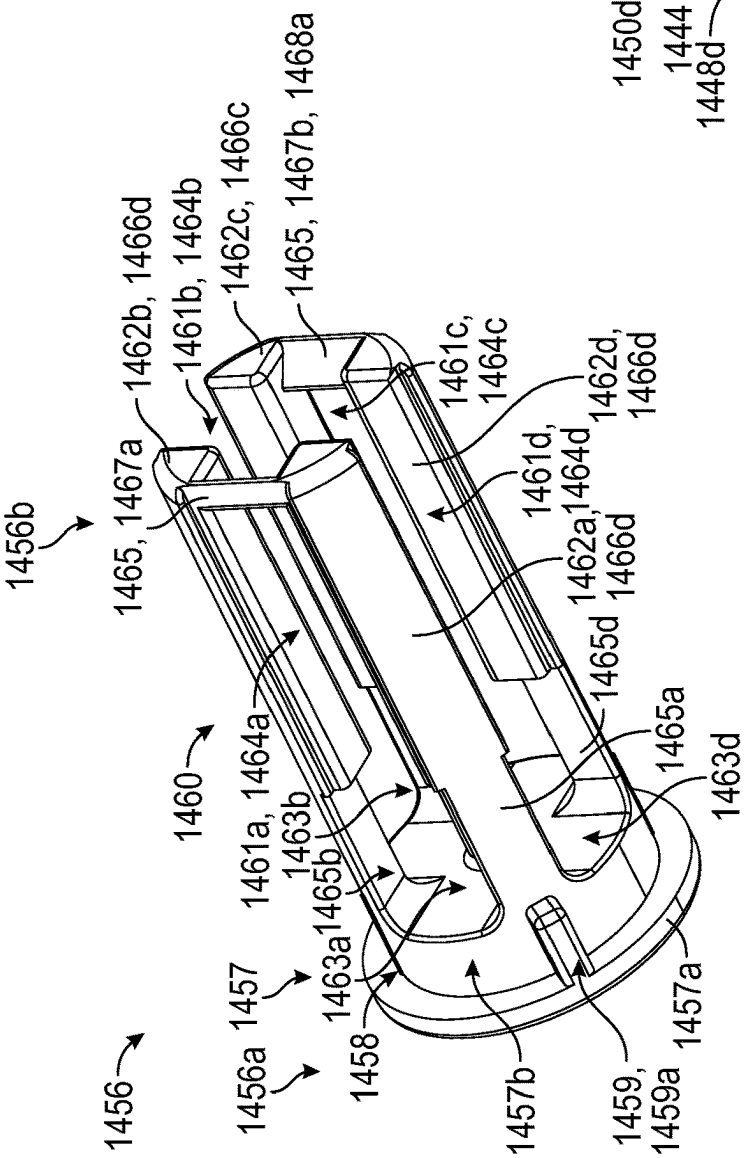

FIG. 21A

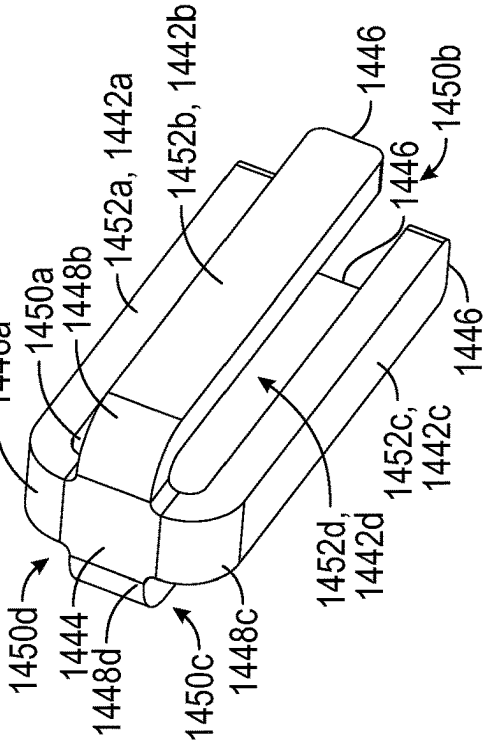

FIG. 21B

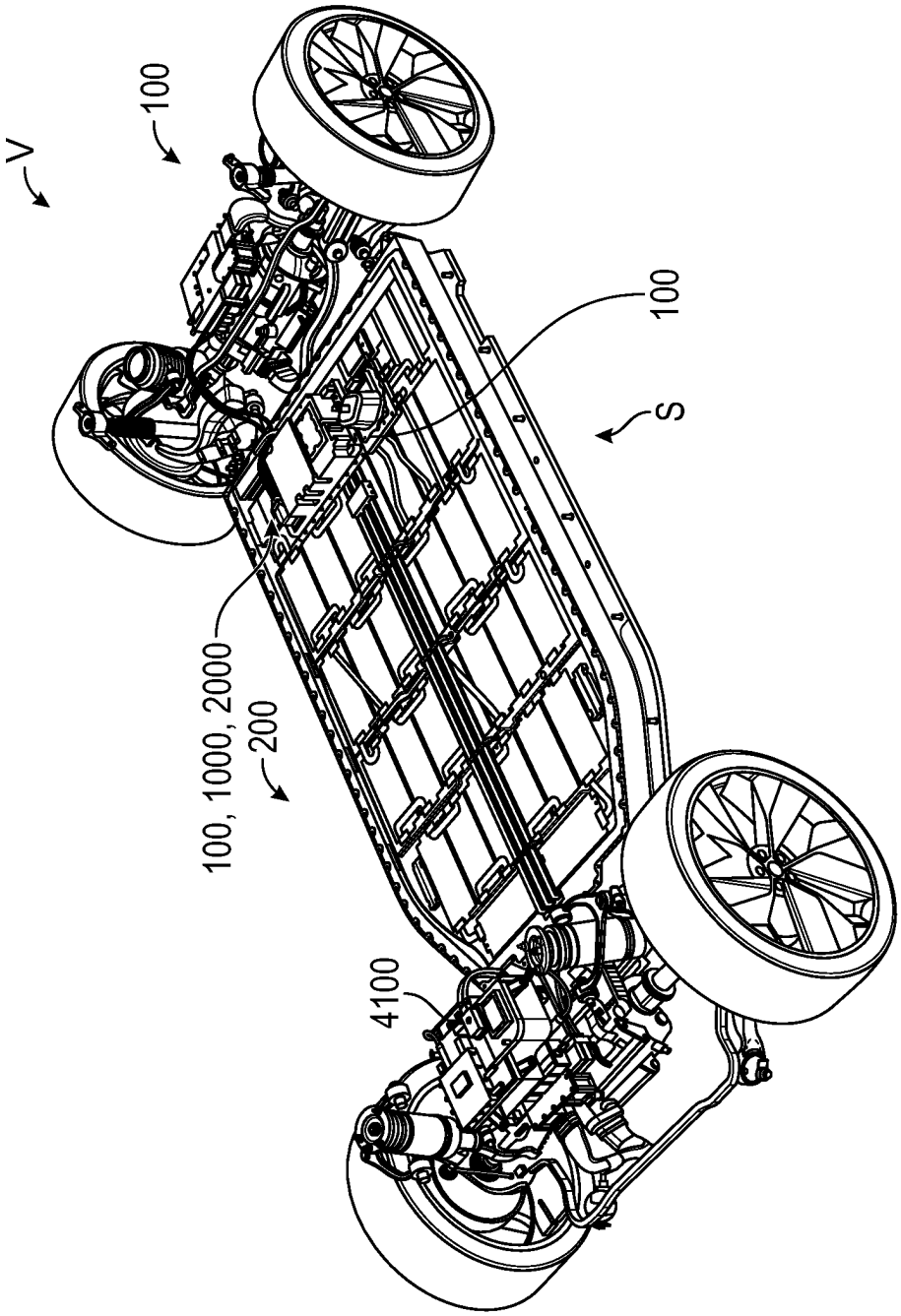

FIG. 22

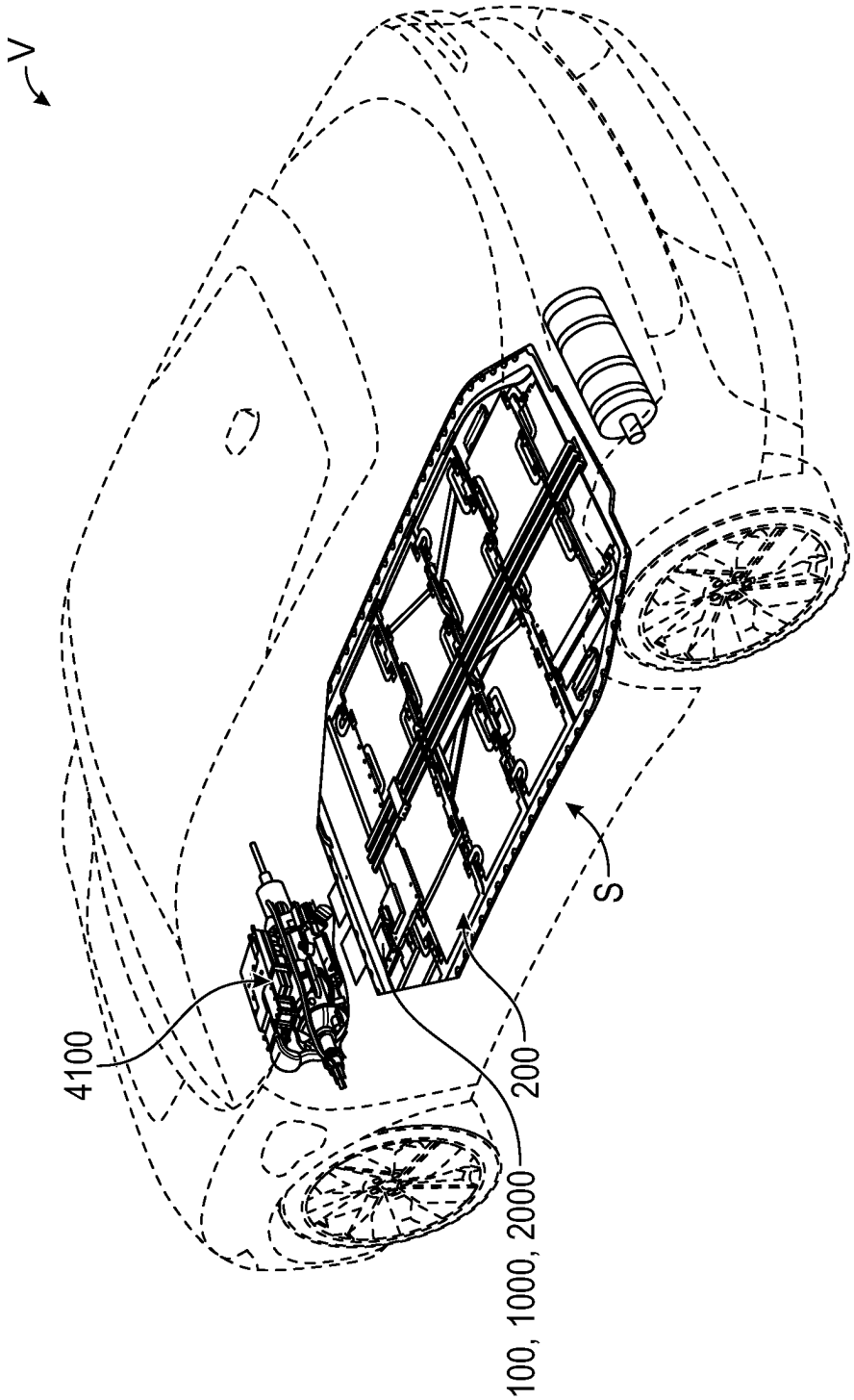

FIG. 23

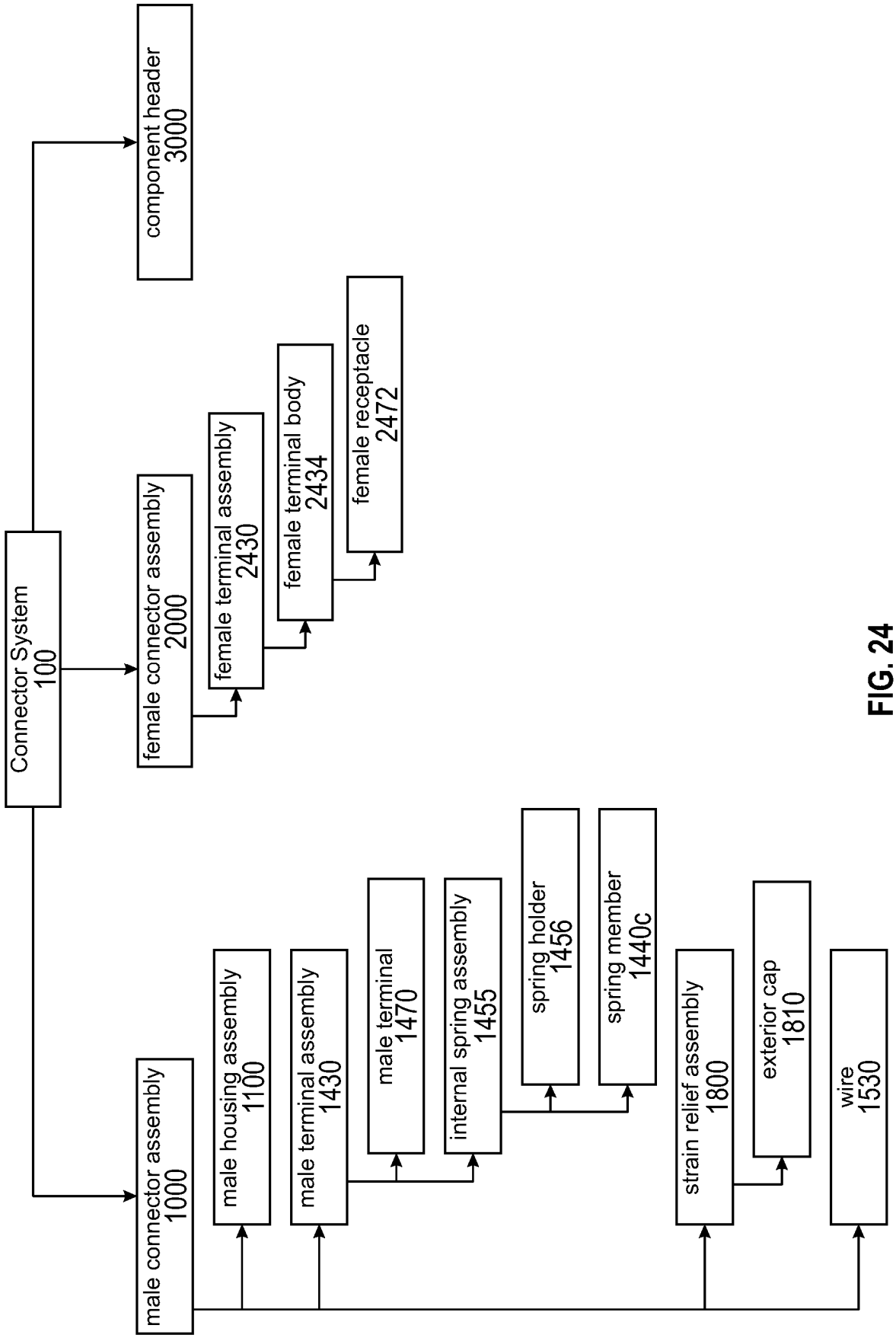
Connector System
100
component header
3000
female connector assembly
2000
female terminal assembly
2430
female terminal body
2434
female receptacle
2472
male connector assembly
1000
male housing assembly
1100
male terminal assembly
1430
male terminal
1470
internal spring assembly
1455
spring holder
1456
spring member
1440c
strain relief assembly
1800
exterior cap
1810
wire
1530

FIG. 24

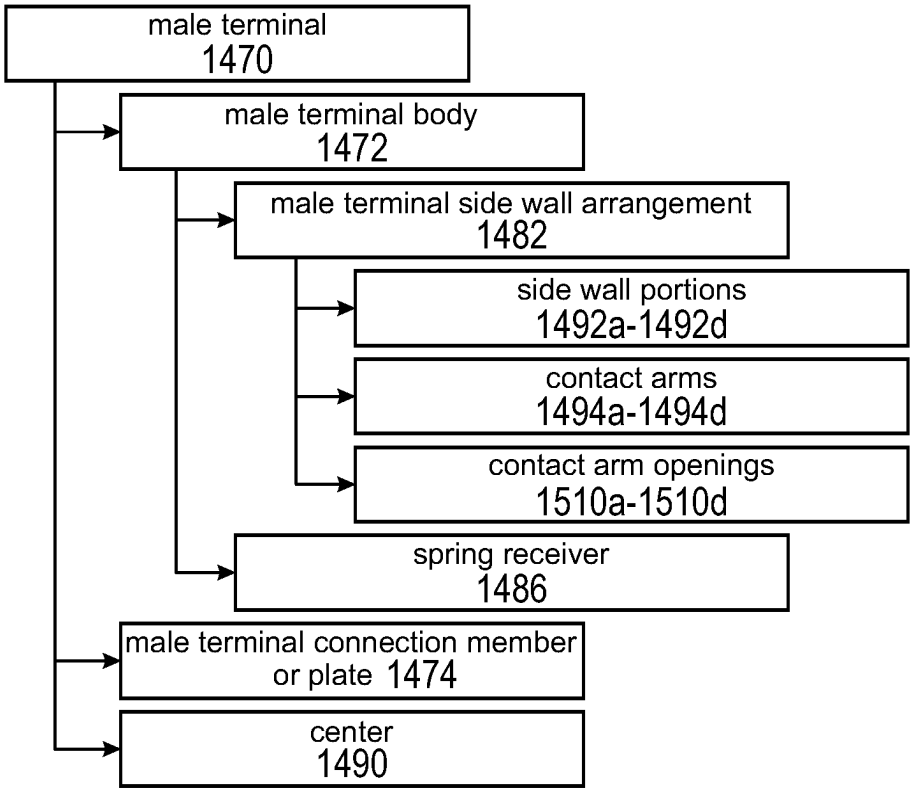

FIG. 25A

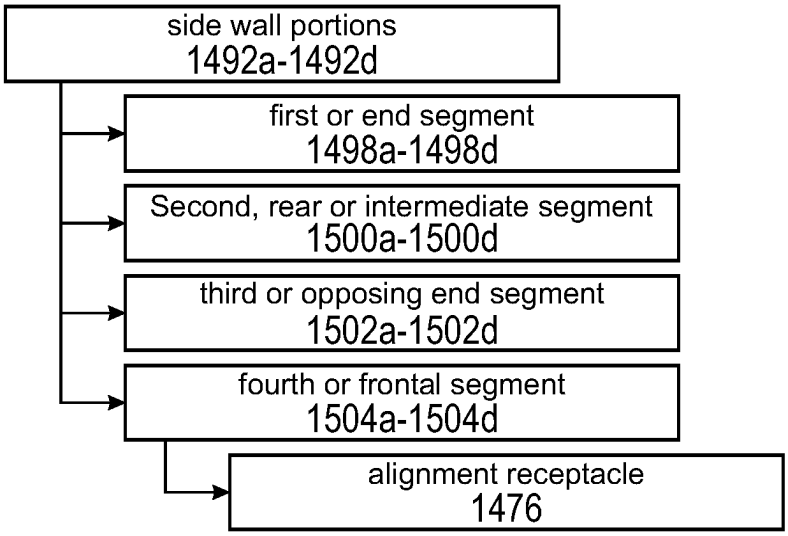

FIG. 25B

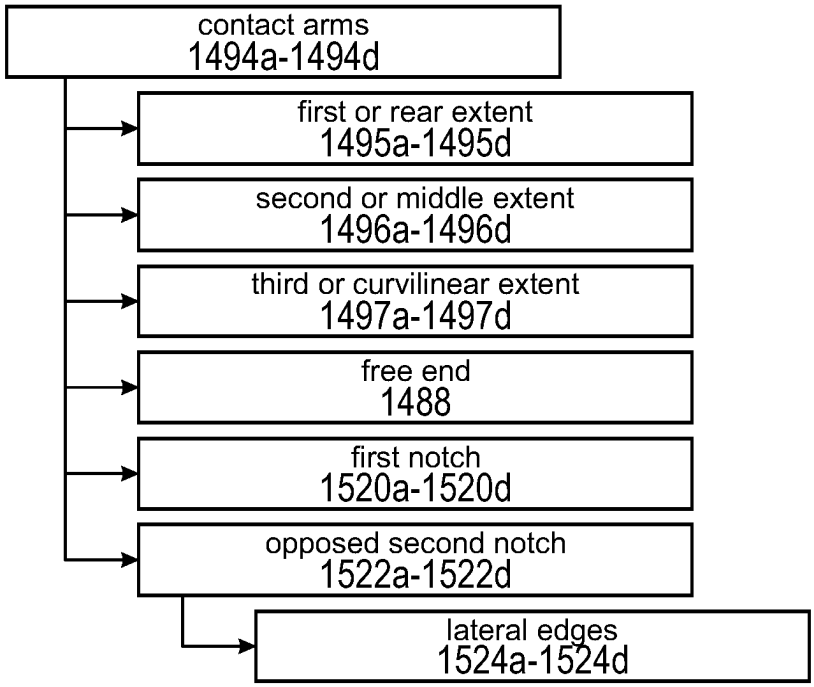

FIG. 25C

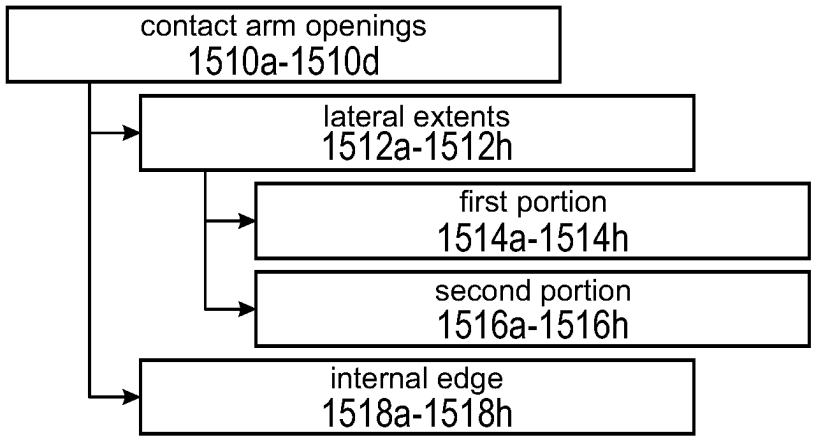

FIG. 25D

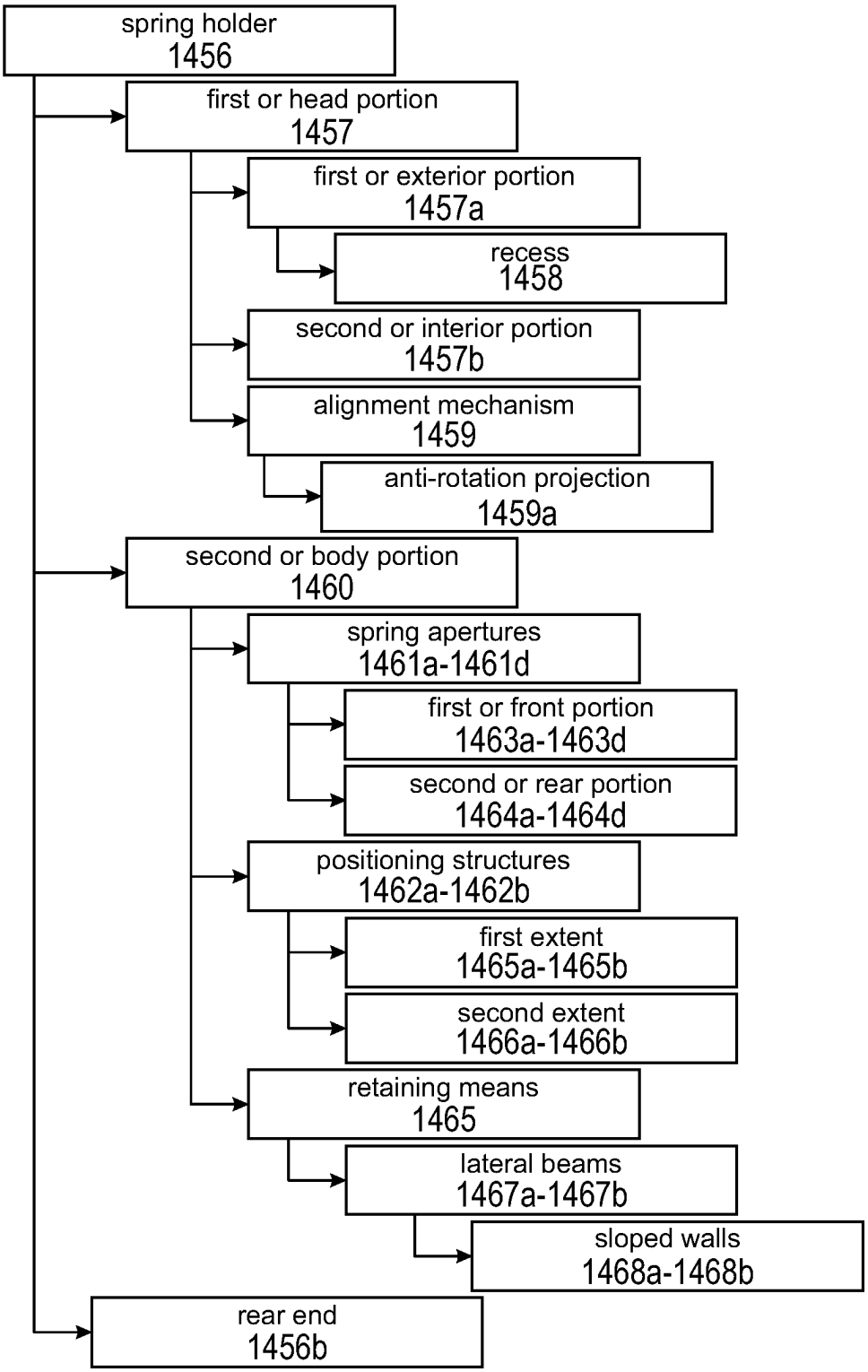
spring holder
1456
first or head portion
1457
first or exterior portion
1457a
recess
1458
second or interior portion
1457b
alignment mechanism
1459
anti-rotation projection
1459a
second or body portion
1460
spring apertures
1461a-1461d
first or front portion
1463a-1463d
second or rear portion
1464a-1464d
positioning structures
1462a-1462b
first extent
1465a-1465b
second extent
1466a-1466b
retaining means
1465
lateral beams
1467a-1467b
sloped walls
1468a-1468b
rear end
1456b

FIG. 26

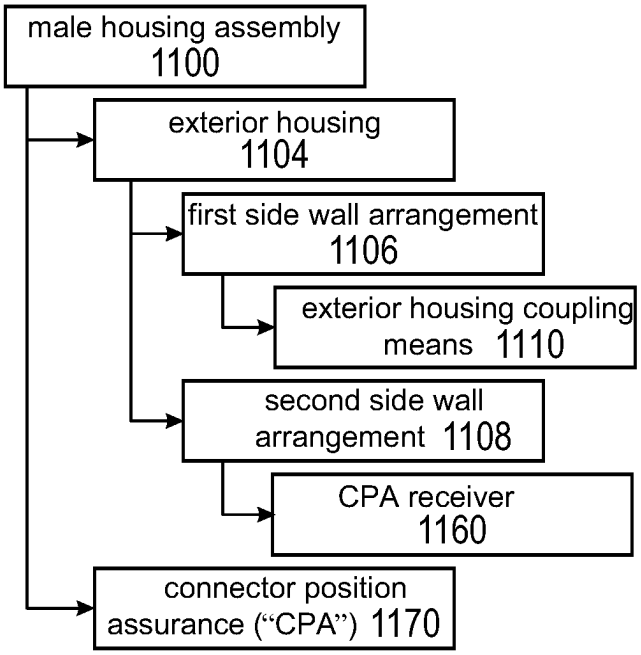
male housing assembly
1100
exterior housing
1104
first side wall arrangement
1106
exterior housing coupling means 1110
second side wall arrangement 1108
CPA receiver
1160
connector position assurance ("CPA") 1170

FIG. 27

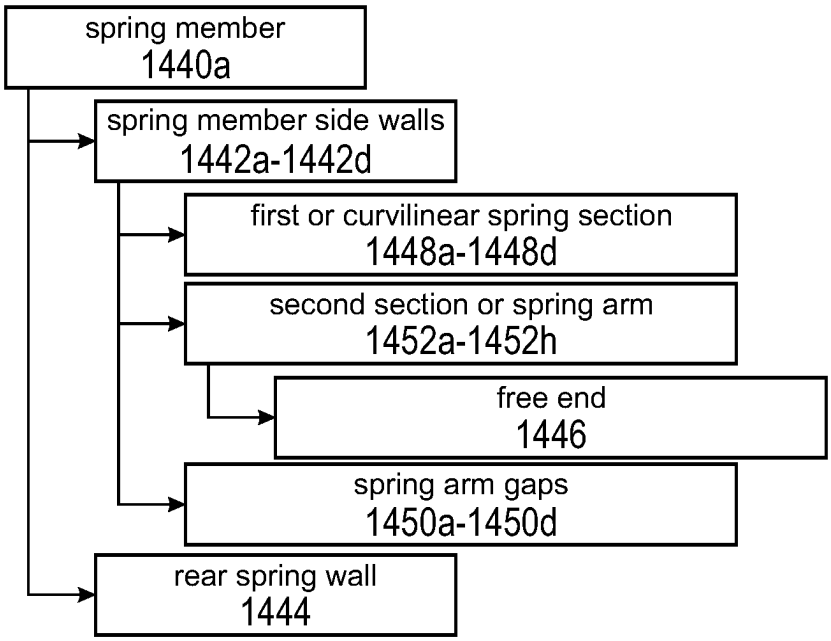
spring member
1440a
spring member side walls
1442a-1442d
first or curvilinear spring section
1448a-1448d
second section or spring arm
1452a-1452h
free end
1446
spring arm gaps
1450a-1450d
rear spring wall
1444

FIG. 28

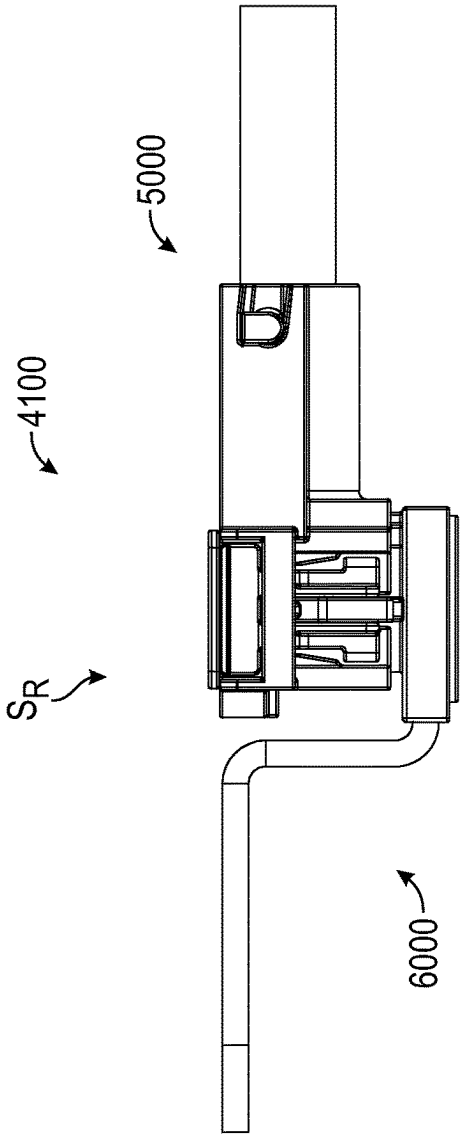

FIG. 30

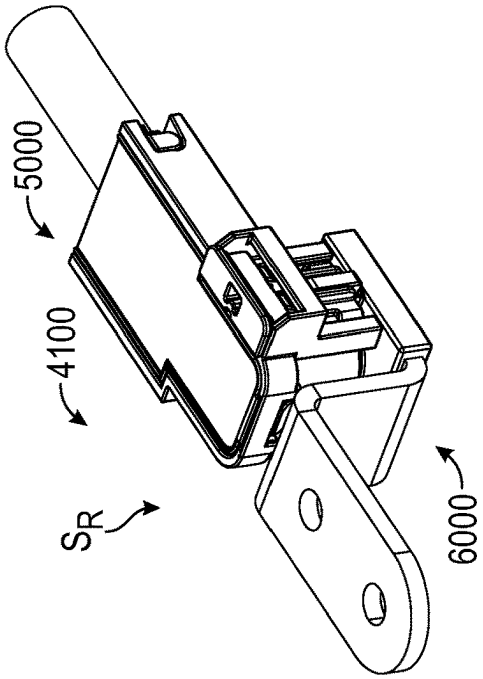

FIG. 29

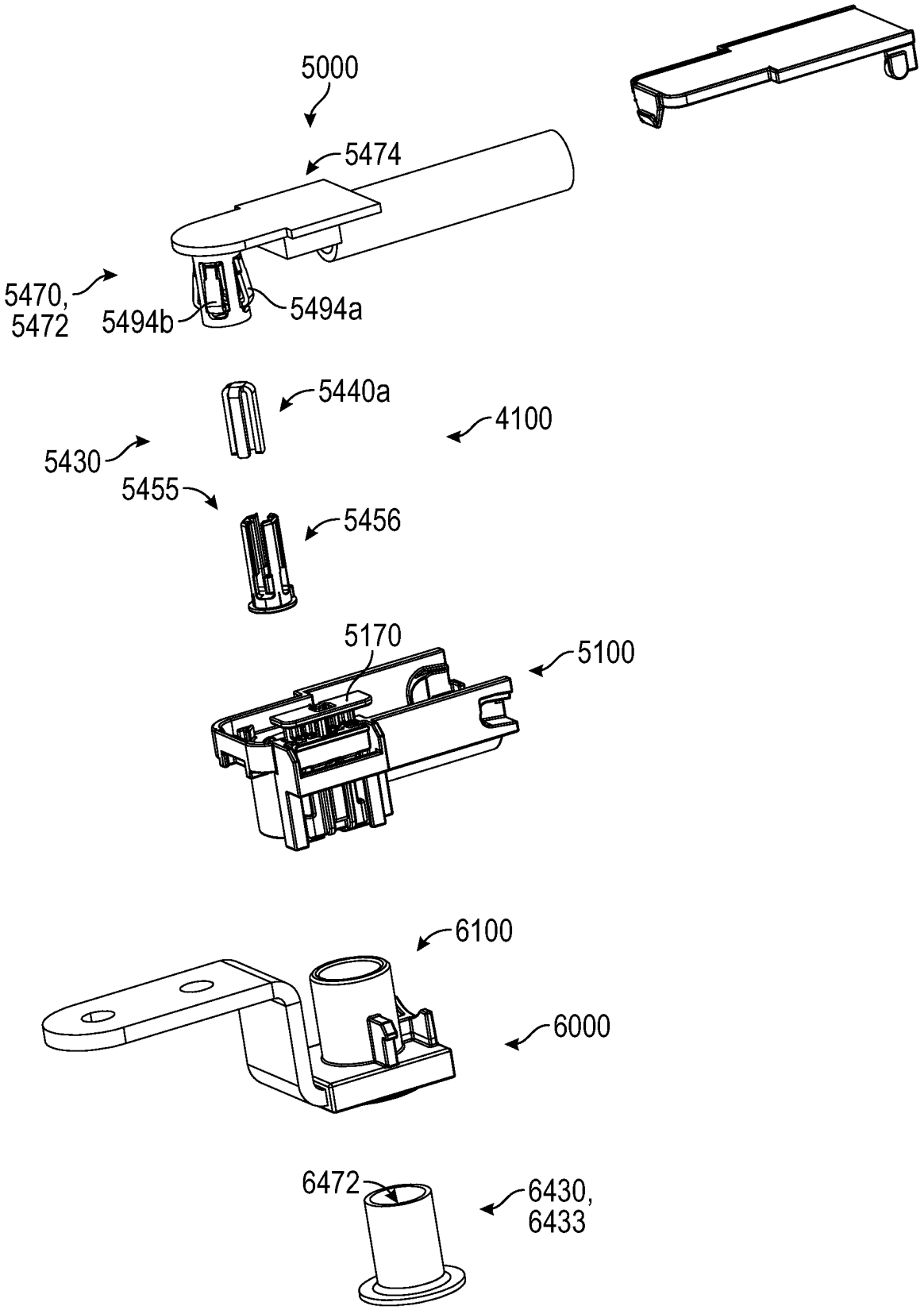
5000
5474
5470,
5472
5494b
5494a
5440a
4100
5430
5455
5456
5170
5100
6100
6000
6472
6430,
6433

FIG. 31

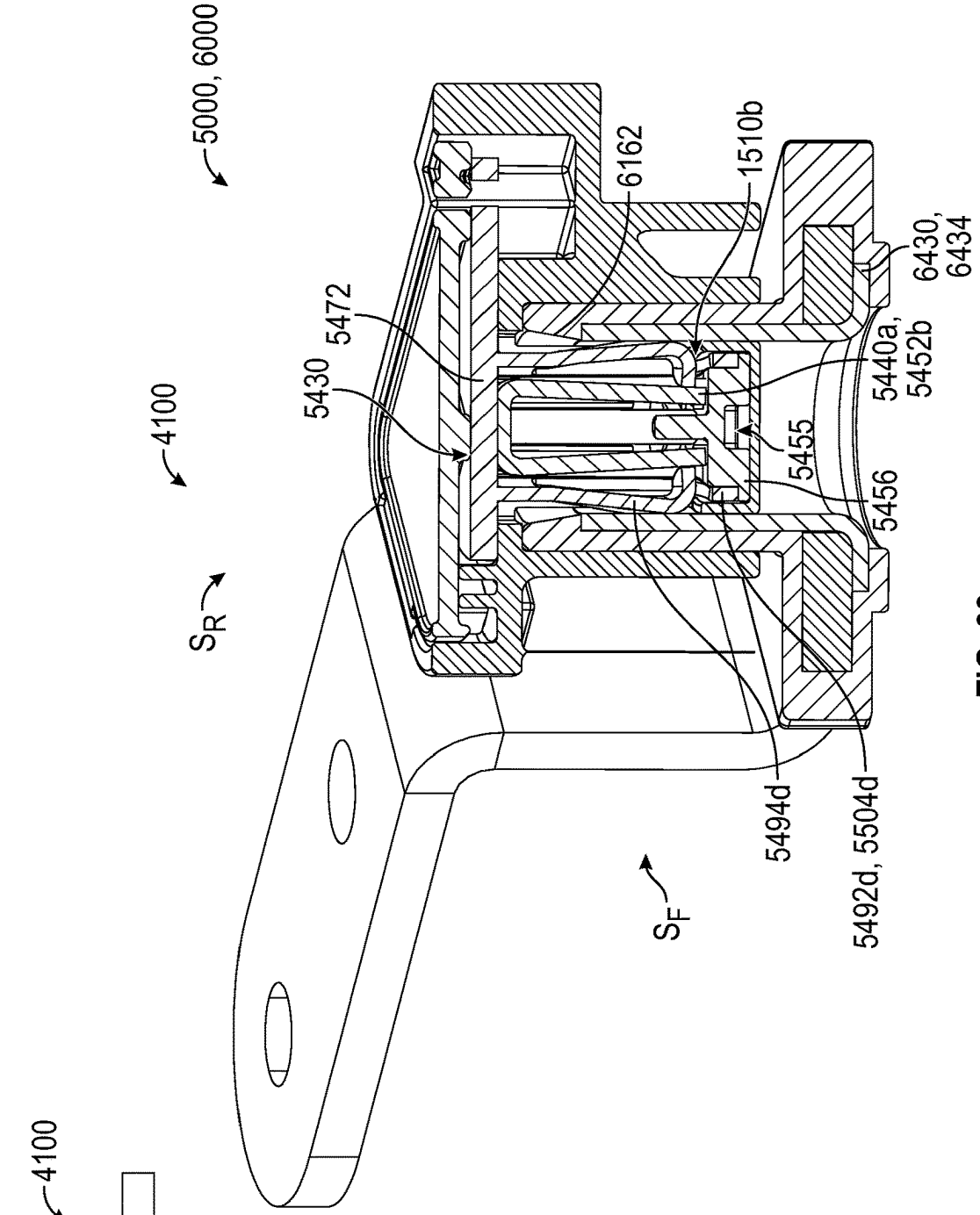
5000, 6000
4100
S_R
5472
5430
6162
1510b
6430,
6434
5440a,
5452b
5455
5456
5494d
5492d, 5504d
S_F

FIG. 33

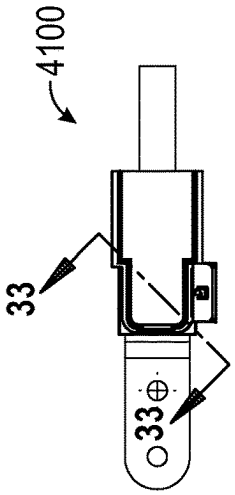
4100
33
33

FIG. 32

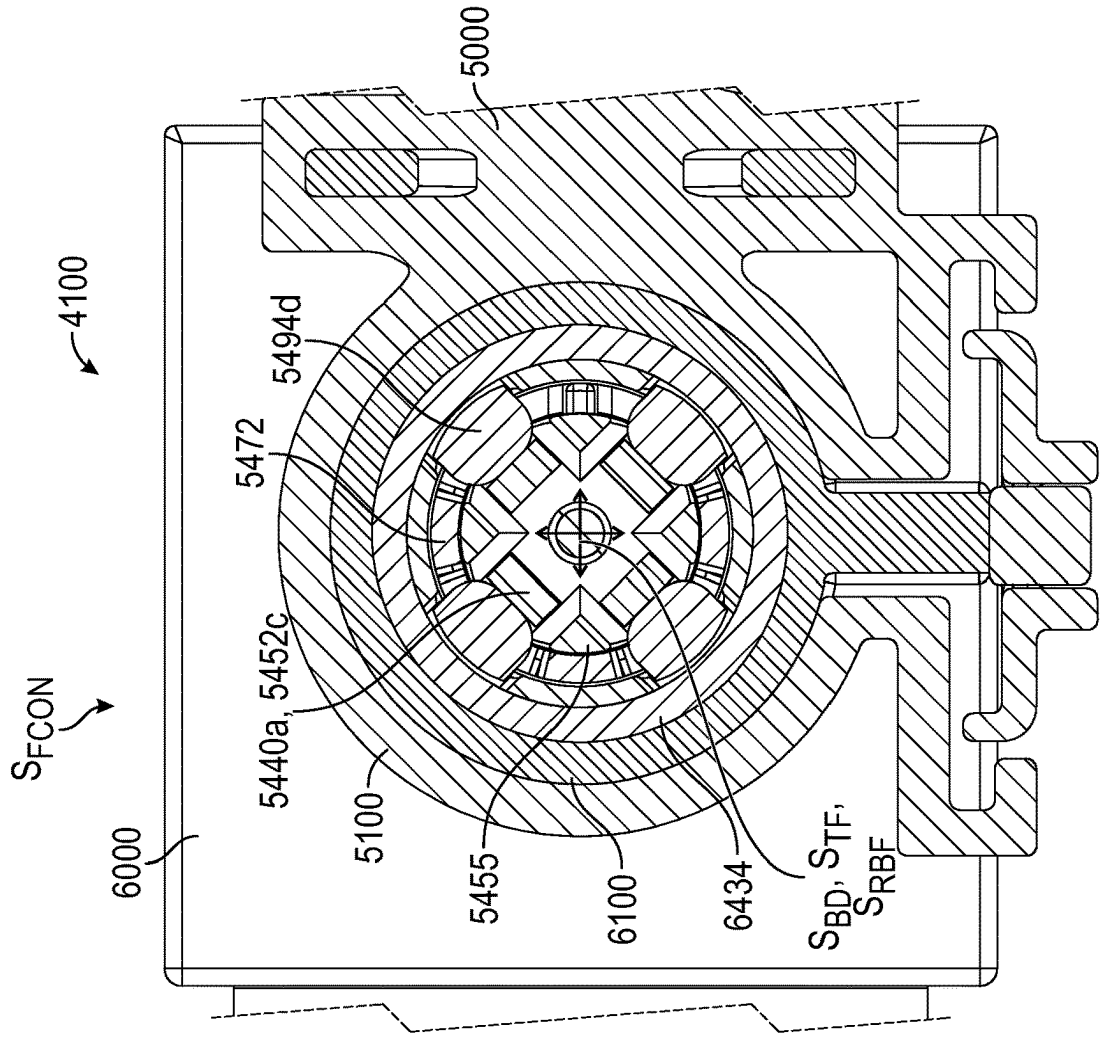
5000
4100
5494d
5472
5440a, 5452c
S_{FCON}
6000
5100
5455
6100
6434
S_{BD}, S_{TF}, S_{RBF}

FIG. 35

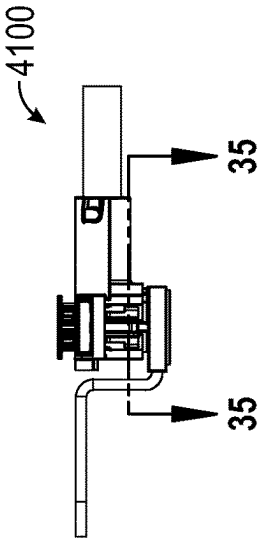
4100
35
35

FIG. 34

ELECTRICAL CONNECTOR SYSTEM WITH CYLINDRICAL TERMINAL BODY

RELATED APPLICATIONS

This application claims the benefit from PCT/US2021/043788, filed Jul. 29, 2021, which claims U.S. provisional patent application 63/058,061, filed Jul. 29, 2020, the disclosure of which are incorporated herein by this reference.

FIELD OF DISCLOSURE

The present disclosure relates to a connector system, more specifically a connector system including a cylindrical terminal body, and most specifically an electrical connector system including a cylindrical terminal body having an internal spring assembly.

BACKGROUND

Over the past several decades, the number of electrical components used in automobiles, and other on-road and off-road vehicles such as pick-up trucks, commercial vans and trucks, semi-trucks, motorcycles, all-terrain vehicles, and sports utility vehicles (collectively "motor vehicles") has increased dramatically. Electrical components are used in motor vehicles for a variety of reasons, including but not limited to, monitoring, improving and/or controlling vehicle performance, emissions, safety and creates comforts to the occupants of the motor vehicles. Considerable time, resources, and energy have been expended to develop power distribution components that meet the varied needs and complexities of the motor vehicle market; however, conventional power distribution components suffer from a variety of shortcomings.

Motor vehicles are challenging electrical environments for both the electrical components and the connector assemblies due to a number of conditions, including but not limited to, space constraints that make initial installation difficult, harsh operating conditions, large ambient temperature ranges, prolonged vibration, heat loads, and longevity, all of which can lead to component and/or connector failure. For example, incorrectly installed connectors, which typically occur in the assembly plant, and dislodged connectors, which typically occur in the field, are two significant failure modes for the electrical components and motor vehicles. Each of these failure modes leads to significant repair and warranty costs. For example, the combined annual accrual for warranty by all of the automotive manufacturers and their direct suppliers is estimated to be between $50 billion and $150 billion, worldwide. In light of these challenging electrical environments, considerable time, money, and energy have been expended to find power distribution components that meet the needs of the markets. This disclosure addresses the shortcomings of conventional power distribution components. A full discussion of the features and advantages of the present disclosure is deferred to the following detailed description, which proceeds with reference to the accompanying drawings.

SUMMARY

The present disclosure relates to a connector system for use in an airplane, motor vehicle, a military vehicle (e.g., tank, personnel carrier, heavy-duty truck, and troop transporter), a bus, a locomotive, a tractor, marine applications (e.g., cargo ship, tanker, pleasure boat, submarine and sailing yacht) telecommunications hardware (e.g., server), a battery pack, a 24-48 volt system, for a high-power application, for a high-current application, for a high-voltage application.

The invention that is discussed herein is a connector system, which can be used to electrically connect a power source to other power distribution components or assemblies. This connector system includes a male connector assembly with a male terminal assembly having a male terminal body. The male terminal body includes contact arms having irregular outer periphery, which is configured to reduce the insertion force associated with the male terminal body. This connector system also includes an innovative spring assembly that includes a spring member and a spring holder that ensures proper relative positioning of the components of the connector system, including the spring member and the male terminal. The connector system also includes a female connector assembly with a female terminal assembly that receives the male terminal assembly and the spring assembly, as discussed below.

In one embodiment of the electrical connector assembly for using in a power distribution assembly, the connector assembly includes an electrically conductive male terminal body having side wall defining a spring receiver. The side wall has a substantially cylindrical configuration and includes a first contact arm and a contact arm opening. The first contact arm having: (a) a first lateral edge, (b) a second lateral edge, (c) a first extent coupled to the side wall and having a first width that extends between the first and second lateral edges, and (d) a second extent coupled to the first extent of the contact arm and having a second width that extends between the first and second lateral edges, wherein the second width is greater than the first width. The contact arm opening having: (a) a first internal edge, (b) a second internal edge, (c) a first lateral extent extending between the first edge of the contact arm and a first internal edge and having a first width, (d) a second lateral extent extending between the first edge of the contact arm and a first internal edge and having a second width, and (e) wherein the first width and second width vary along the first and second lateral extents. The connector assembly also includes an internal spring member dimensioned to reside within the spring receiver of the male terminal body and having a first spring arm that is configured to underlie the first contact arm.

In another embodiment of the electrical connector assembly for using in a power distribution assembly, the connector assembly includes an electrically conductive male terminal body having: (i) a spring receiver, (ii) alignment receptacle, and (iii) a substantially cylindrical configuration. The connector assembly further includes an internal spring assembly having: (i) an internal spring member having a first spring arm and (ii) a spring holder dimensioned to reside within the spring receiver. Wherein the spring holder has: (a) an alignment mechanism configured to be positioned within the alignment receptacle in a joined state J_S, and wherein the alignment mechanism and alignment receptacle function together in order to properly align the internal spring member within the male terminal body and (b) a rear portion configured to receive and retain the internal spring member within the spring holder.

BRIEF DESCRIPTION OF THE DRAWINGS

The accompanying drawings, which are included to provide further understanding and are incorporated in and constitute a part of this specification, illustrate disclosed

embodiments and together with the description serve to explain the principles of the disclosed embodiments. In the drawings:

FIG. **1** is a perspective view of a component interface having a plurality of connector systems coupled thereto, each connector system including a male connector assembly and a female connector assembly;

FIG. **2** is a perspective view of the component interface and connector systems of FIG. **1**, showing: (i) one connector system in an exploded view, (ii) two connector systems in a disconnected state SD, where the male connector assembly is disconnected from the female connector assembly, and (iii) one connector system in a connected state Sc where the male connector assembly is connected to the female connector assembly, and where all of the female connector assemblies reside in the component interface;

FIG. **3** is a perspective view of the male connector assembly of the connector system of FIG. **1**, the male connector assembly being in a fully assembled state (SFA);

FIG. **4** is a side view of the male connector assembly of FIG. **3**;

FIG. **5** is a bottom view of the male connector assembly of FIG. **3**;

FIG. **6** is a top view of the male connector assembly of FIG. **3**;

FIG. **7** is an exploded view of the male connector assembly of FIG. **3**, the male connector assembly having a male housing and a male terminal assembly;

FIG. **8** is a perspective view of the male terminal assembly of the male connector assembly of FIG. **3**, showing the male terminal assembly in a fully coupled state SFC;

FIG. **9** is a partial top view of the male terminal assembly of FIG. **8** in the fully coupled state SFC;

FIG. **10** is a rear view of the male terminal assembly of FIG. **8**;

FIG. **11** is a side view of the male terminal assembly of FIG. **8**;

FIG. **12** is a bottom view of the male terminal assembly of FIG. **8**;

FIG. **13** is a cross-sectional view of the male terminal assembly taken along line **13-13** of FIG. **12**;

FIG. **14** is a bottom view of the male terminal assembly of FIG. **8**;

FIG. **15** is a cross-sectional view of the male terminal assembly taken along line **15-15** of FIG. **14**;

FIG. **16** is a partial side view of the male terminal assembly of FIG. **8**;

FIG. **17** is a cross-sectional view of the male terminal assembly taken along the **17-17** line of FIG. **16**;

FIG. **18** is a perspective view of the spring assembly of the male terminal assembly of FIG. **8**, showing the spring assembly in a joined state S_J;

FIG. **19** is a bottom view of the spring assembly of FIG. **18**;

FIG. **20** is a cross-sectional view of the spring assembly taken along line **20-20** of FIG. **19**;

FIG. **21**A is a perspective view of the spring holder of FIG. **18**;

FIG. **21**B is a perspective view of the spring member of FIG. **18**;

FIG. **22** is a perspective view of a vehicle skateboard chassis with a battery pack and wheels and tires, the vehicle skateboard including both the first and second embodiments of the connector system; and

FIG. **23** is a perspective view of a motor vehicle having the skateboard chassis and battery pack of FIG. **22**;

FIG. **24** is a block diagram showing components of the connector system;

FIG. **25**A is a block diagram showing components of the male terminal;

FIG. **25**B is a block diagram showing components of the side wall portions of the male terminal;

FIG. **25**C is a block diagram showing components of the contact arms of the male terminal;

FIG. **25**D is a block diagram showing components of the contact arm openings of the male terminal;

FIG. **26** is a block diagram showing components of the spring holder;

FIG. **27** is a block diagram showing components of the male housing; assembly;

FIG. **28** is a block diagram showing components of the spring member;

FIG. **29** is a perspective view of a second embodiment of a connector system, the connector system including a male connector assembly and a female connector assembly;

FIG. **30** is a side view of the connector system of FIG. **29**;

FIG. **31** is an exploded view of the connector system of FIG. **29**, showing the male connector assembly and the female connector assembly;

FIG. **32** is a top view of the connector system of FIG. **29**;

FIG. **33** is a cross-sectional view of the connector system taken along line **33-33** of FIG. **32**;

FIG. **34** is a side view of the connector system of FIG. **29**; and

FIG. **35** is a cross-sectional view of the connector system taken along line **35-35** of FIG. **34**.

DETAILED DESCRIPTION

In the following detailed description, numerous specific details are set forth by way of examples in order to provide a thorough understanding of the relevant teachings. However, it should be apparent to those skilled in the art that the present teachings may be practiced without such details. In other instances, well-known methods, procedures, components, and/or circuitry have been described at a relatively high-level, without detail, in order to avoid unnecessarily obscuring aspects of the present teachings.

While this disclosure includes a number of embodiments in many different forms, there is shown in the drawings and will herein be described in detail particular embodiments with the understanding that the present disclosure is to be considered as an exemplification of the principles of the disclosed methods and systems, and is not intended to limit the broad aspects of the disclosed concepts to the embodiments illustrated. As will be realized, the disclosed methods and systems are capable of other and different configurations and several details are capable of being modified all without departing from the scope of the disclosed methods and systems. For example, one or more of the following embodiments, in part or whole, may be combined consistently with the disclosed methods and systems. Accordingly, the drawings and detailed descriptions are to be regarded as illustrative in nature, not restrictive or limiting.

The Figures show two embodiments of connector systems **100**, **4100** which is designed to mechanically and electrically couple one device or component to another device or component within a power distribution system or environment. For example, a device or component may be a current supplying device or component (e.g., power source, such as an alternator or battery) and the other device or component may be current drawing device or component (e.g., radiator fan, heated seat, power distribution component, or another

current drawing component). Said power distribution system or environment that includes the connector systems **100**, **4100** may be installed within an airplane, motor vehicle, a military vehicle (e.g., tank, personnel carrier, heavy-duty truck, and troop transporter), a bus, a locomotive, a tractor, a boat, a submarine, a battery pack, a 24-48 volt system, for a high-power application, for a high-current application, for a high-voltage application.

An exemplary application of the connector system **100**, **4100** is shown in FIGS. **28-29**, wherein the connector system **100**, **4100** is used in connection with a battery pack **200** installed in a vehicle skateboard S, wherein the vehicle skateboard S is installed in vehicle V. The battery pack **200** (see FIGS. **22-23**) is configured to be positioned within the vehicle skateboard S (see FIG. **22**), both of which are configured to be positioned within a motor vehicle V (see FIG. **23**). In this and other applications, the power distribution components is essential to meet industry standards, production, and performance requirements of the power distribution system and the motor vehicle. It should be understood that multiple connector systems **100**, **4100** could be used in a single application. Other embodiments, configurations, and uses for the connector system **100**, **4100** is described within this application and are contemplated by this disclosure.

Various aspects of the first embodiment of the connector system **100** are disclosed herein. Specifically, the connector system **100** is comprised of: (i) a male connector assembly **1000**, (ii) a female connector assembly **2000**, and (iii) a component header **3000**. FIGS. **1-20** show various views and components of the male connector assembly **1000**. The male connector assembly **1000** is primarily composed of: (i) a male housing assembly **1100**, (ii) a male terminal assembly **1430** having a male terminal body **1472** and an internal spring assembly **1455**, and (iii) a strain relief assembly **1800**. FIGS. **1-2** show various views and components of the female connector assembly **2000** and the component header **3000**. The female connector assembly **2000** is primarily composed of a female terminal assembly **2430**, while the component header **3000** is primarily composed of a female housing assembly **3100**.

Various aspects of the first embodiment of the connector system **4100** are disclosed herein. Specifically, the connector system **4100** is comprised of: (i) a male connector assembly **5000** and (ii) a female connector assembly **6000**. FIGS. **29-35** show various views and components of the male connector assembly **5000**. The male connector assembly **5000** is primarily composed of: (i) an male housing assembly **5100**, (ii) a male terminal assembly **5430**, and (iii) a strain relief assembly **5800**. FIGS. **29-35** show various views and components of the female connector assembly **6000**. The female connector assembly **6000** is primarily composed of: (i) an female housing assembly **6100**, and (ii) a female terminal assembly **6430**.

First Embodiment

1) Male Connector Assembly

The male connector assembly **1000** is includes multiple components that are designed to be positioned external to a component or device (e.g., radiator fan, heated seat, power distribution component, or another current drawing component). The male connector assembly **1000** is primarily composed of: (i) the male housing assembly **1100**, (ii) the male terminal assembly **1430**, and (iii) the strain relief assembly **1800**.

The male housing assembly **1100** encases or surrounds a substantial extent of the other components contained within the male connector assembly **1000**. The male housing assembly **1100** generally includes: (i) an male housing **1104** and (ii) connector position assurance ("CPA") **1170**. The male housing **1104** includes two arrangements of walls, wherein: (i) the first side wall arrangement **1106** has a tubular configuration and is designed to receive an extent of the wire **1530** and (ii) the second side wall arrangement **1108** has a tubular configuration and is designed to receive a substantial extent of the male terminal assembly **1430**. The first arrangement of side walls **1106** includes a male housing coupling means **1110** that is designed to interact with an exterior cap **1810** that will be discussed below and is a part of the strain relief assembly **1800**. The second arrangement of walls **1108** includes a CPA receiver **1160** that extends from the side walls **1104***a*, **1108***a*, and is designed to receive an extent of the CPA **1170**. The two wall arrangements are typically formed from an insulating material that is designed to isolate the electrical current that flows through the male connector assembly **1000** from other components. Said CPA **1170** is generally designed to enable the connector system **100** to meet USCAR Specifications, including USCAR-12, USCAR-25, and USCAR-2. Additional details about the male housing assembly **1100**, including the CPA **1170**, are described within PCT/US2019/36070 and PCT/US20/49870, both of which are incorporated herein by reference.

In other embodiments, the housing assembly **1100** may be designed in a manner that permits mating from any direction. In other words, the male connector assembly **1000** is not keyed in a manner that only allows the connector assembly **1000** to mate with the female terminal **2430** when the male connector assembly **1000** is in a specific orientation. In this alternative configuration, the CPA **1170** may be omitted or may have a different structural configuration to permit this type of mating between the components. Additionally, the housing assembly **1100** may be shielded, may have additional layers of non-conductive and/or conductive materials, and/or may have a larger footprint in order to accept multiple male terminal assemblies **1430**.

FIGS. **2**, **5**, **7-20** provide various views of the male terminal assembly **1430**. Referring specifically to the first embodiment, the male terminal assembly **1430** includes a spring member **1440***a* and a male terminal **1470**. The male terminal **1470** includes a male terminal body **1472** and a male terminal connection member or plate **1474**. Said male terminal body **1472** includes a male terminal side wall arrangement **1482** configured to provide a spring receiver **1486** that is designed to receive the internal spring member or male spring member **1440***a*. Referring to FIGS. **7**, **9**, **13**, **15**, **17**, and **18-20**, the internal spring assembly or spring assembly **1455** includes an internal spring holder or spring holder **1456** and an internal spring member or spring member **1440***a*. The spring holder **1456** is configured to: (i) receive and retain an extent of the spring member **1440***a*, (ii) secure the spring member **1440***a* within the male terminal body **1472** in a joined state S_J, (iii) help ensure that the spring member **1440***a* is properly positioned, aligned, and/or centered within the male terminal body **1472**.

Referring to FIGS. **7**, **9**, **13**, **15**, **17**, and **18-20**, the spring holder **1456** is comprised of a first portion or head portion **1457** and a second portion or body portion **1460**. The head portion **1457** includes: (i) a first or exterior portion **1457***a*, which is configured to be positioned outside or exterior to the male terminal body **1472**, (ii) a second or interior portion **1457***b*, which is configured to be positioned within or interior to the male terminal body **1472**, and (iii) an align-

ment mechanism or a poka-yoke **1459**. Focusing first on the exterior portion **1457***a*, the diameter D_{ESH} of said exterior portion **1457***a* is larger than the interior diameter D_{IMB} of the male terminal body **1472**, while the diameter D_{ESH} of the exterior portion **1457***a* is approximately equal to the outer diameter D_{OMB} of the male terminal body **1472**. The diameter D_{ESH} of the exterior portion **1457***a*: (i) prevents the holder **1456** from being inserted too far into the male terminal body **1472** due to the interaction between the exterior portion **1457***a* and a frontal extent of the male terminal body **1472**, and (ii) helps prevent foreign objects from making contact with the male terminal **1430** because it is positioned in front of the male terminal body **1472**. Additionally, it should be understood that the diameter D_{ESH} of the exterior portion **1457***a* is preferably not larger than the outer diameter D_{OMB} of the male terminal body **1472** because a larger diameter D_{ESH} would likely prevent proper mating between the male terminal assembly **1430** and the female terminal assembly **2430**.

Now focusing on the interior portion **1457***b* of the spring holder **1456**, the diameter D_{ISH} of said interior portion **1457***a* is less than or substantially equal to the interior diameter D_{IMB} of the male terminal body **1472**. This smaller diameter D_{ISH} of the interior portion **1457***b* enables insertion of the holder **1456** within the male terminal body **1472**. Additionally, the diameter D_{ISH} of the interior portion **1457***b* is greater than the diameter D_{BSH} of body portion **1460** of the holder **1456**. This greater diameter allows an extent of the holder **1456** to fit snuggly within the terminal **1430**, while utilizing a smaller diameter to help ensure that the holder **1456** does not interfere with the movement of the spring **1440***a* during operation of the connector system **100**. It should be understood that other diameters and configurations of the holder **1456** are contemplated by this disclosure.

The configuration of the exterior portion **1457***a* and interior portion **1457***b* and their associated diameters D_{ESH}, D_{ISH}, form a recess **1458**, which is configured to receive an extent of the male terminal body **1472**, when the holder **1456** is coupled thereto in a fully coupled state. Positioned within said recess **1458** is the alignment mechanism **1459**. The alignment mechanism **1459** is designed to ensure that the holder **1456** is properly positioned within the male terminal body **1472**, whereby the proper positioning of the holder **1456** ensures that the spring member **1440***a* is properly positioned in the male terminal body **1472**. Properly aligning the spring member **1440***a* within the male terminal body **1472**, provides many advantages over terminals that do not have properly aligned spring members, wherein such advantages include: (i) ensuring that the spring member **1440***a* applies a proper biasing force on the male terminal body **1472** to provide a proper connection between the male terminal assembly **1430** and the female terminal assembly **2430**, (ii) helps improve the durability and useable life of the terminal assemblies **1430**, **2430**, and (iii) other beneficial features that are disclosed herein or can be inferred by one of ordinary skill in the art from this disclosure.

In this embodiment, the alignment mechanism **1459** is an anti-rotation projection **1459***a* configured to be received by a receptacle **1476** formed in a frontal extent of the male terminal body **1472**. The anti-rotation projection **1459***a* helps align or center the spring member **1440***a* by limiting the amount the spring member **1440***a* can rotate or be miss-positioned within the male terminal body **1472**. It should be understood that in other embodiments the alignment mechanism **1459** may take other forms, such as: (i) projections that extend inward from an extent of the male terminal body **1472**, (ii) projections that extend outward from the spring member **1440***a* and are received by recesses, detents, or openings in the male terminal body **1472**, (iii) projections that extend inward towards the center of the connector from the contact arms **1494***a*-**1494***d*, (iv) projections, tabs, grooves, recesses, or extents of other structures that are designed to help ensure that the spring member **1440***a* is aligned within the male terminal body **1472** and cannot rotate within the spring receiver **1486**.

It should further be understood that instead of utilizing a mechanical based alignment mechanism **1459**, the alignment mechanism **1459** may be force based, wherein such forces that may be utilized are magnetic forces or chemical forces. In this example, the holder **1456** may be welded to the male terminal body **1472**. In contrast to a mechanical or force based alignment mechanism **1459**, the alignment mechanism **1459** may be a method or process of forming the male terminal assembly **1430**. For example, the alignment mechanism **1459** may not be a structure, but instead may simultaneous printing of the spring member **1440***a* within the male terminal body **1472** in a way that does not require assembly. In other words, the alignment mechanism **1459** may take many forms (e.g., mechanical based, force based, or process based) to achieve the purpose of aligning the spring member **1440***a* within the male terminal body **1472**.

The second portion or body portion **1460** extends from the interior portion **1457***b* of the first or head portion **1456** and is integrally formed therewith. The body portion **1460** includes multiple features (e.g., apertures, members, and structures) that aid in the positioning and retention of the spring member **1440***a*. In particular, the body **1460** includes spring apertures **1461***a*-**1461***d* that form the positioning structures **1462***a*-**1462***d*. Said spring apertures **1461***a*-**1461***d* are designed to receive at least an extent of the spring arms **1494***a*-**1494***d* and preferably the entire spring arm **1494***a*-**1494***d*, when the spring member **1440***a* is positioned within the spring holder **1455** to form a joined state S_J. As such, the spring apertures **1461***a*-**1461***d* have a length and a width that is sufficient to receive at least an extent of the spring arms **1494***a*-**1494***d* and preferably the entire spring arm **1494***a*-**1494***d*. In other words, the length and width of the spring apertures **1461***a*-**1461***d* are preferably greater than the length and width of the spring arms **1494***a*-**1494***d*.

The spring apertures **1461***a*-**1461***d* have a first or front portion **1463***a*-**1463***d* and a second or rear portion **1464***a*-**1464***d*. The front portion **1463***a*-**1463***d* has a first width and extends rearward from the head portion **1457** of the holder **1456** and, while the second portion **1464***a*-**1464***d* has a second width and extends rearward from the first portion **1463***a*-**1463***d* to either: (i) the rear end **1456***b* of the holder **1456** or (ii) retaining means **1465**. The first width associated with the first portion **1463***a*-**1463***d* is larger than the second width associated with the second portion **1464***a*-**1464***d*. In other words, the extent of the positioning structures **1462***a*-**1462***d* that are positioned adjacent to the first portion **1463***a*-**1463***d* are smaller than the positioning structures **1462***a*-**1462***d* positioned adjacent to the second portion **1464***a*-**1464***d*. This enlarged extent of the spring apertures **1461***a*-**1461***d* or reduced extent of the positioning structures **1462***a*-**1462***d* helps ensure that the holder **1456** does not interfere with omnidirectional contraction/expansion of the spring member **1440***a* during insertion and operation of the connector system **100**. It should be understood that in other embodiments, changing width of the spring apertures **1461***a*-**1461***d* may be omitted, inverted, or differentiation between the first and second portions may be increased or decreased.

The positioning structures **1462***a*-**1462***d* are designed to align, position, and retain the spring member **1440***a* within the male terminal body **1472**. The positioning structures **1462***a*-**1462***d* extend along at least an extent of the spring arms **1494***a*-**1494***d* and preferably the entire length of the spring arm **1494***a*-**1494***d*. The positioning structures **1462***a*-**1462***d* have a cross-sectional shape that is substantially triangular, wherein the outermost extent of the triangular shape is curvilinear. In other words, the positioning structures **1462***a*-**1462***d* have two linear sides and one curvilinear side that connects the two linear sides. As described above, positioning structures **1462***a*-**1462***d* that are formed by the spring apertures **1461***a*-**1461***d* have: (i) a first extent **1465***a*-**1465***d* that extends along the first portion **1463***a*-**1463***d* of the spring apertures **1461***a*-**1461***d* and (ii) a second extent **1466***a*-**1466***d* that extends along the second portion **1464***a*-**1464***d* of the spring apertures **1461***a*-**1461***d*. The first extent **1465***a*-**1465***d* has a first cross-sectional area and a first depth (extending from the outer surface towards the center of the holder **1456**), while the second extent **1466***a*-**1466***d* has a second cross-sectional area and a second depth. Both the first cross-sectional area and a first depth are smaller than the second cross-sectional area and a second depth. It should be understood that in other embodiments, changing cross-sectional area and a depth of the positioning structures **1462***a*-**1462***d* may remain constant, have a larger variance, or have a smaller variance. It should also be understood that the cross-sectional shape of the positioning structures **1462***a*-**1462***d* may be different then what is shown in the figures and/or may vary across the positioning structures **1462***a*-**1462***d*.

The retaining means **1465** is designed and configured to retain the spring member **1440***a* within the holder **1456**. In the embodiment shown in the figures, said retaining means **1465** are lateral beams **1467***a*-**1467***b* that extent between the positioning structures **1462***a*-**1462***d*. In particular, lateral beam **1467***a* is positioned near the rear end **1456***b* of the holder **1456** and extends between positioning structures **1462***a*-**1462***b* and lateral beam **1467***b* is positioned near the rear end **1456***b* of the holder **1456** and extends between positioning structures **1462***c*-**1462***d*. The rearmost surface of the lateral beams **1467***a*-**1467***b* is sloped to aid in the coupling of the holder **1456** and spring member **1440***a*. Specifically, these sloped walls **1468***a*-**1468***b* help center the spring member **1440***a* and force the first pair of positioning structures **1462***a*-**1462***b* away from the second pair of positioning structures **1462***c*-**1462***d*. As such, the user or assembler must simply apply a forwardly directed force on the spring member **1440***a* in order to temporarily deform the positioning structures **1462***a*-**1462***d* in order to allow for insertion of the spring member **1440***a*. Once the spring member **1440***a* is positioned in the retainer **1456**, the positioning structures **1462***a*-**1462***d* can return to a normal or non-deformed position. In this non-deformed position, the lateral beams **1467***a*-**1467***b* are positioned rearward of the spring member **1440***a* to retain the spring member **1440***a* within the holder **1456**. It should be understood that uncoupling the spring member **1440***a* from the holder **1456** requires the user or installer to apply forces in opposite directions in order to deform the pairs of positioning structures **1462***a*-**1462***d* further enough to allow for extraction of the spring member **1440***a* from the holder **1456**. It should be understood that lateral beams are not coupled across each of the positioning structures **1462***a*-**1462***d* (e.g., between **1462***b* and **1462***c*) because deforming the positioning structures **1462***a*-**1462***d* to a necessary extent may be difficult, if not impossible.

It should be understood that in other embodiments the retaining means **1465** may take other forms, such as: (i) a locking rear wall, (ii) projections that extend from the spring member **1440***a* and are received by the holder **1456**, (iii) opening in the spring member **1440***a* that receives an extent of the holder **1456**, or (iv) any other way of retaining/coupling one structure to another structure, which may include the use of projections, tabs, grooves, recesses, or extents. It should further be understood that instead of utilizing a mechanical based retaining means **1465**, the retaining means **1465** may be force based, wherein such forces that may be utilized are magnetic forces or chemical forces. In this example, the holder **1456** may be welded to the male terminal body **1472**. In contrast to a mechanical or force based retaining means **1465**, the retaining means **1465** may be a method or process of forming the male terminal assembly **1430**. For example, the retaining means **1465** may not be a structure, but instead may simultaneous printing of the spring member **1440***a* within the holder **1456** in a way that does not require assembly. In other words, the retaining means **1465** may take many forms (e.g., mechanical based, force based, or process based) to achieve the purpose of securing the spring member **1440***a* to the holder **1456**.

The spring member **1440***a* includes an arrangement of spring member side walls **1442***a*-**1442***d* and a rear spring wall **1444**. Each spring member side wall **1442***a*-**1442***d* is comprised of: (i) a first or curvilinear spring section **1448***a*-**1448***d*, and (iii) a second section or spring arm **1452***a*-**1452***d*. The curvilinear spring section **1448***a*-**1448***d* extend between the rear spring wall **1444** and the spring arm **1452***a*-**1452***d* and position the spring arm **1452***a*-**1452***d* substantially perpendicular to the rear spring wall **1444**. In other words, the outer surface of the spring arm **1452***a*-**1452***d* is substantially perpendicular to the outer surface of the rear spring wall **1444**.

As shown in FIG. **21**B, the spring arms **1452***a*-**1452***d* extend from the first or curvilinear spring section **1448***a*-**1448***d* of the spring member **1440***a*, away from the rear spring wall **1444**, and terminate at a free end **1446**. The spring arms **1452***a*-**1452***d* are not connected to one another and thus spring arm gaps **1450***a*-**1450***d* are formed between the spring arms **1452***a*-**1452***d* of the spring member **1440***a*. The spring arm gaps **1450***a*-**1450***d* aid in omnidirectional expansion of the spring arms **1452***a*-**1452***d*, which facilitates the mechanical coupling between the male terminal **1470** and the female terminal assembly **2430**.

The spring arms **1452***a*-**1452***d* are generally planar and are positioned such that the outer surface of the spring arms **1452***a*-**1452***d* is substantially perpendicular to the outer surface of the rear wall **1444**. Unlike the spring arm **31** that is disclosed within FIGS. **4**-**8** of PCT/US2018/019787, the free end **1446** of the spring arms **1452***a*-**1452***d* do not have a curvilinear component. Instead, the spring arms **1452***a*-**1452***d* have a substantially planar outer surface. This configuration is beneficial because it ensures that the forces associated with the spring **1440***a* are applied substantially perpendicular to the free end **1488** of the male terminal body **1472**. In contrast, the curvilinear components of the spring arm **31** are disclosed within FIGS. **4**-**8** of PCT/US2018/019787 do not apply a force in this manner.

The internal spring member **1440***a* is typically formed from a single piece of material (e.g., metal); thus, the spring member **1440***a* is a one-piece spring member **1440***a* or has integrally formed features. In particular, the following features are integrally formed: (i) the curvilinear spring section **1448***a*-**1448***d*, and (ii) the spring arm **1452***a*-**1452***d*. To integrally form these features, the spring member **1440***a* is

typically formed using a die forming process. The die forming process mechanically forces the spring member **1440***a* into shape. As discussed in greater detail below and in PCT/US2019/036010, when the spring member **1440***a* is formed from a flat sheet of metal, installed within the male terminal **1472** and connected to the female receptacle **2472**, and is subjected to elevated temperatures, the spring member **1440***a* applies an outwardly directed spring thermal force STF on the contact arms **1494***a*-**1494***d* due in part to the fact that the spring member **1440***a* attempts to return to a flat sheet. However, it should be understood that other types of forming the spring member **1440***a* may be utilized, such as casting or using an additive manufacturing process (e.g., 3D printing). In other embodiments, the features of the spring member **1440***a* may not be formed from a one-piece or be integrally formed, but instead formed from separate pieces that are welded together.

In an alternative embodiment that is not shown, the spring member **1440***a* may include recesses and associated strengthening ribs. As discussed in PCT/US2019/036010, these changes to the configuration of the spring member **1440***a* alter the forces that are associated with the spring **1440***a*. In particular, the spring biasing force SBF is the amount of force that is applied by the spring member **1440***a* to resist the inward deflection of the free end **1446** of the spring member **1440***a* when the male terminal assembly **1430** is inserted within the female terminal assembly **2430**. Specifically, this inward deflection occurs during the insertion of the male terminal assembly **1430** due to the fact that an extent of an outer surface of the male terminal body **1472** is slightly larger than the interior of the female receptacle **2472**. Thus, when the male terminal assembly **1430** is inserted into the female terminal assembly **2430**, the extent of the outer surface is forced towards the center **1490** of the male terminal **1470**. This inward force on the outer surface displaces the free end **1446** of the spring member **1440***a* inward (i.e., towards the center **1490**). The spring member **1440***a* resists this inward displacement by providing a spring biasing force S_F. In other embodiments, the spring arms **1452***a*-**1452***d* may be coupled to other structures to restrict their omnidirectional expansion. The number and width of individual spring arms **1452***a*-**1452***d* and openings may vary. In addition, the width of the individual spring arms **1452***a*-**1452***d* is typically equal to one another; however, in other embodiments one of the spring arms **1452***a*-**1452***d* may be wider than other spring arms.

FIGS. **8**-**17** show a male terminal **1470** that includes the male terminal body **1472** and a male terminal connection plate **1474**. Specifically, the male terminal connection plate **1474** is coupled to the male terminal body **1472** and is configured to receive an extent of a structure (e.g., lead or wire) that connects the male terminal assembly **1430** to a device (e.g., an alternator) outside of the connector system **100**. The wire **1530** is typically welded to the connection plate **1474**; however, other methods (e.g., forming the wire **1530** as a part of the connection plate **1474**) of connecting the wire **1530** to the connection plate **1474** are contemplated by this disclosure. For example, a crimping connection may be utilized instead of the disclosed welding process.

As shown in FIGS. **8**-**17**, the terminal side wall arrangement **1482** provides the terminal body **1472** with a generally cylindrical terminal configuration. The male terminal side wall **1482** includes: (i) a side wall portions **1492***a*-**1492***d*, (ii) contact arms **1494***a*-**1494***d*, and (iii) a plurality of contact arm openings **1510***a*-**1510***d*. As best shown in FIGS. **9**-**17**, the side wall portions **1492***a*-**1492***d* are substantially curvilinear and include four segments **1498**, **1500**, **1502**, and **1504**. In particular, the four segments are: (i) a first or end segment **1498***a*-**1498***d*, (ii) a second, rear, or intermediate segment **1500***a*-**1500***d*, (iii) a third or opposing end segment **1502***a*-**1502***d*, and (iv) a fourth or front segment **1504***a*-**1504***d*. The second, rear or intermediate segment **1500***a*-**1500***d* and the fourth or front segment **1504***a*-**1504***d* are both coupled: (i) the first or end segment **1498***a*-**1498***d* and (ii) the third or opposing end segment **1502***a*-**1502***d*. It should be understood that the inclusion of more or less segments and/or other configures of the side wall portions **1492***a*-**1492***d* are contemplated by this disclosure.

The contact arm openings **1510***a*-**1510***d* are integrally formed with the side wall portions **1492***a*-**1492***d*, which in turn delineates the contact arms **1494***a*-**1494***d* and the four segments **1498**, **1500**, **1502**, **1504** of the side wall portions **1492***a*-**1492***d*. In other words, the contact arm openings **1510***a*-**1510***d* surround three sides of the contact arms **1494***a*-**1494***d* in order to create a configuration that permits the contact arms **1494***a*-**1494***d* not to be laterally connected to: (i) another contact arm **1494***a*-**1494***d* or (ii) a structure other than the second, rear or intermediate segment **1500***a*-**1500***d* to which the contact arms **1494***a*-**1494***d* are coupled thereto. As best shown in FIGS. **10**, **11** and **17**, contact arm openings **1510***a*-**1510***d* include lateral extents **1512***a*-**1512***h* that extend along each elongated edge of the contact arms **1494***a*-**1494***d*. For example, one contact arm opening **1510***a* includes: (i) a first lateral extent **1512***a* positioned between the contact arm **1494***a* and the first segment **1498***a* of the side wall portion **1492***a* and (ii) a second lateral extent **1512***b* positioned between the contact arm **1494***a* and the third segment **1502***a* of the side wall portion **1492***a*. In particular, the first lateral extent **1512***a* extends between a first lateral edge **1524***a* of the contact arm **1510***a* and a first internal edge **1518***a* of the contact arm opening **1510** and the second lateral extent **1512***b* extends between a second lateral edge **1524***b* of the contact arm **1510***a* and a second internal edge **1518***b* of the contact arm opening **1510**.

In light of the above configuration, said lateral extents **1512***a*-**1512***h* of the contact arm openings **1510***a*-**1510***d* that extend along the contact arm **1494***a*-**1494***d* do not have uniform widths. As such, said lateral extents **1512***a*-**1512***h* are comprised of: (i) a first portion **1514***a*-**1514***h* has a first lateral width Wu and is positioned adjacent to intermediate segment **1500***a*-**1500***d* of the side wall portions **1492***a*-**1492***d* and (ii) a second portion **1516***a*-**1516***h* has a second lateral width WL**2** and is positioned such that it abut the first portion **1514***a*-**1514***h* and terminate at the frontal segment **1504***a*-**1504***d* of the side wall portions **1492***a*-**1492***d*. The first width which is associated with the first portion **1514***a*-**1514***h* is different than the second width which is associated with the second portion **1516***a*-**1516***h*. In particular, the first lateral width Wu is larger than the second lateral width WL**2** in the embodiment displayed in the Figures. For example, the first width in the displayed embodiment is approximately 0.95 mm, where the second width is approximately 0.45 mm. With these varying widths, it should be understood that the first and second lateral edges **1524***a*, **1524***b* of the contact arm **1510***a* are not substantially linear. Additionally, an extent of the contact arm openings **1510***a*-**1510***d* are aligned with the spring arm gaps **1450***a*-**1450***d*, when the male terminal assembly **1430** is in the fully coupled state SFC. This configuration forms four spring arms **1452***a*-**1452***d* and four contact arms **1494***a*-**1494***d*. It should be understood that in other embodiments, the number of spring arms **1452***a*-**1452***d* may not match the number of contact arms **1494***a*-**1494***d*. For example, there may be fewer one spring arms **1452***a*-**1452***d*.

As best shown in FIGS. **10-11** and **15**, the contact arms **1494***a*-**1494***d* extend: (i) from an extent of the intermediate segment **1500***a*-**1500***d* of the side wall portion **1492***a*-**1492***d*, (ii) across an extent of the contact arm openings **1510***a*-**1510***d*, and (iii) terminate just short of the fourth or front segment **1504***a*-**1504***d*. This configuration is beneficial over the configuration of the terminals shown in FIGS. **9-15**, **18**, **21-31**, **32**, **41-42**, **45-46**, **48** and **50** in PCT/US2018/019787 because it allows for: (i) can be shorter in overall length, which means less metal material is needed for formation and the male terminal **1470** can be installed in narrower, restrictive spaces, (ii) has a higher current carrying capacity, (iii) is easier to assemble, (iv) improved structural rigidity because the contact arms **1494***a*-**1494***d* are positioned inside of the first male terminal side wall portion **1492***a*-**1492***d*, (iv) benefits that are disclosed in connection with PCT/US2019/036010, and (v) other beneficial features that are disclosed herein or can be inferred by one of ordinary skill in the art from this disclosure.

As best shown in FIGS. **15** and **17**, the contact arms **1494***a*-**1494***d* includes: (i) a first or rear extent **1495***a*-**1495***d* that extends from the second, rear or intermediate segment **1500***a*-**1500***d*, (ii) a second or middle extent **1496***a*-**1496***d* that extends between the first extent **1495***a*-**1495***d* and a third extent **1497***a*-**1497***d*, and (iii) the third or curvilinear extent **1497***a*-**1497***d* that extends between the second extent **1496***a*-**1496***d* and the free end **1488**. Said extents **1495***a*-**1495***d*, **1496***a*-**1496***d*, and **1497***a*-**1497***d* have non-uniform widths, wherein said widths include: (i) the first or rear extent **1495***a*-**1495***d* has a first contact arm width W_{C1} that extends between the first portion **1514***a*-**1514***h* of the lateral extents **1512***a*-**1512***h* of the contact arm openings **1510***a*-**1510***d*, and (ii) the second and third extents **1496***a*-**1496***d*, **1497***a*-**1497***d* have a second contact arm width W_{C2} that extends between the second portion **1516***a*-**1516***h* of the lateral extents **1512***a*-**1512***h* of the contact arm openings **1510***a*-**1510***d*. As described above, the widths of the portions **1514***a*-**1514***h*, **1516***a*-**1516***h* vary and as such the widths of the contact arms **1494***a*-**1494***d* vary.

In this embodiment, the first contact arm width W_{C1} that extends from the first lateral edge **1524***a* to the second lateral edge **1524***b* and is associated with the first extent **1495***a*-**1495***d* of the contact arm **1494***a*-**1494***d* is less than the second contact arm width W_{C2} that extends from the first lateral edge **1524***a* to the second lateral edge **1524***b* and is associated with the second and third extents **1496***a*-**1496***d*, **1497***a*-**1497***d* of the contact arm **1494***a*-**1494***d*. This reduction in the width of the first extent **1495***a*-**1495***d* forms a contact arm **1494***a*-**1494***d* with an irregular outer periphery, wherein a first notch **1520***a*-**1520***d* and an opposed second notch **1522***a*-**1522***d* are formed in the contact arm **1494***a*-**1494***d* and extend along the length of the first extent **1495***a*-**1494***d* of the contact arm **1494***a*-**1494***d*. The first width in one embodiment is approximately 1.9 mm, where the second width is approximately 2.9 mm. Thus, each notch **1520***a*-**1520***d*, **1522***a*-**1522***d* has a width that is approximately 0.5 mm. It should be understood that in other embodiment: (i) the width of the curvilinear extent **1497***a*-**1497***d* may not be equal to the width of the middle extent **1496***a*-**1496***d*, (ii) the variability in the widths of the extents **1495***a*-**1495***d*, **1496***a*-**1496***d*, **1497***a*-**1497***d* may be greater or less, (iii) there may be additional extents with additional differing widths (e.g., 10 extents, wherein each extent has a different width), (iv) the number, depth, or configuration of notches **1520***a*-**1520***d*, **1522***a*-**1522***d* may not be equal for each contact arm **1494***a*-**1494***d*, (v) the widths of each of the extents may be substantially equal.

The smaller first width of the contact arm **1494***a*-**1494***d*, namely—the rear extent **1495***a*-**1495***d* of the contact arm **1494***a*-**1494***d*—reduces the force that is required to deflected or displaced the contact arm **1494***a*-**1494***d* inward and towards the center **1490** of the male terminal **1470** when coupling the male terminal assembly **1430** to the female terminal assembly **2430**. This is beneficial because it reduces the insertion force that is associated with the male terminal body **1472** and increase the insertion force that is associated with the internal spring member **1440***a* in order to maintain the same combined insertion force level. In other words, the disclosed connector system **100** utilizes the same insertion force requirements that would be associated with a similar connector system that includes a contact arm that has linear edges. However, the forces associated with the components that contribute to the insertion force have been reallocated to place a heaver reliance on the spring member **1440***a* and less reliance on the male terminal body **1472**. This heavier reliance on the internal spring member **1440***a* is beneficial because the designer can easily change the properties of the connector system without requiring alterations to the terminal body **1472**. For example, the designer can insert a stiffer spring member **1440***a* within the spring receiver **1486** in order to increase the current capacity of the system **100**. Or if there are specific customer requirements setting forth a target insertion force, the designer can simply select a spring member **1440***a* that meets these requirements without the need to redesign the male terminal body **1472**. This modularity and flexibility of the connector system **100** is a substantial improvement over the prior art, as reduce the number of product skus, increases the ability to meet customer requirements without retooling or redesigning the connector, and/or limits testing and other steps that would be required to utilize new/different connectors. For these reasons and additional reasons that would be obvious to one of skill in the art based on this disclosure, the connector system **100**, and specifically the male terminal assembly **1430**, provide substantial advantages over the male terminal assembly **430** shown and disclosed within PCT/US19/36010.

The contact arms **1494***a*-**1494***d* extend away from a forward extent of the second, rear or intermediate segment **1500***a*-**1500***d* at an outward angle. In particular, the outward angle alpha, which may be between 179.9 degree and 172 degrees between the outer surface of the extent of the male terminal side wall **1492***a*-**1492***d* and the outer surface of the first extent of the contact arms **1494***a*-**1494***d*, preferably between 6 degrees and 12 degrees and most preferably between 8 degrees and 10 degrees. This outward angle is shown in multiple figures, but may be best visualized in connection with FIG. **15**. This configuration allows the contact arms **1494***a*-**1494***d* to be deflected or displaced inward and towards the center **1490** of the male terminal **1470** by the female receptacle **2472**, when the male terminal assembly **1430** is inserted into the female terminal assembly **2430**. This inward deflection is best shown in FIG. **25**. This inward deflection helps ensure that a proper mechanical and electrical connection is created by ensuring that the contact arms **1494***a*-**1494***d* are placed in contact with the female receptacle **2472**.

As shown in FIGS. **10-11** and **15**, the terminal ends of the contact arms **1494***a*-**1494***d* are positioned: (i) within the contact arm openings **1510***a*-**1510***d*, (ii) substantially parallel to the male terminal side wall **1492***a*-**1492***d*, and (iii) in contact the planar outer surface of the spring arms **1452***a*-**1452***d*, when the spring member **1440***a* is inserted into the spring receiver **1486**. This configuration is beneficial over

the configuration shown in FIGS. **3-8** in PCT/US2018/019787 because the assembler of the male terminal assembly **1430** does not have to apply a significant force in order to deform a majority of the contact arms **1494***a*-**1494***d* outward to accept the spring member **1440***a*. This required deformation can best be shown in FIG. **6** of PCT/US2018/019787 due to the slope of the contact arm **11** and the fact the outer surface of the spring arm **31** and the inner surface of the contact arm **11** are adjacent to one another without a gap formed therebetween. In contrast to FIGS. **3-8** in PCT/US2018/019787, FIG. **7** of the present application show a very small gap that is formed between the outer surfaces of the spring member **1440***a* and the inner surface of the contact arms **1494***a*-**1494***d*. Accordingly, very little force is required to insert the spring member **1440***a* into the spring receiver **1486** due to the fact the assembler does not have to force the contact arms **1494***a*-**1494***d* to significantly deform during the insertion of the spring **1440***a*.

The male terminal **1470** is typically formed from a single piece of material (e.g., metal); thus, the male terminal **1470** is a one-piece male terminal **1470** and has integrally formed features. To integrally form these features, the male terminal **1470** is typically formed using a die-cutting process. However, it should be understood that other types of forming the male terminal **1470** may be utilized, such as casting or using an additive manufacturing process (e.g., 3D printing). In other embodiments, the features of the male terminal **1470** may not be formed from a one-piece or be integrally formed, but instead formed from separate pieces that are welded together. In forming the male terminal **1470**, it should be understood that any number (e.g., between 1 and 100) of contact arms **1494***a*-**1494***d* may be formed within the male terminal **1470**.

Positioning the internal spring member **1440***a* within the male terminal assembly **1430** occurs across multiple steps or stages. FIG. **7** provides the first embodiment of the spring assembly **1455** in a un-joined state S_{UJ}, while FIG. **18-20** shows the first embodiment of the spring assembly in a joined state S_J. As described above, to move the spring assembly **1455** from the un-joined state S_{UJ} to the joined state S_J, the user or assembler aligns the spring member **1440***a*—namely, the spring arm **1452***a*-**1452***d*—with the spring arm apertures **1461***a*-**1461***d* of the spring holder **1456**. After these components are aligned, the user applies a compressive force on these components in order to temporally elastically deform the positioning structures **1462***a*-**1462***d* in order to allow the spring member **1440***a* to overcome the retaining means **1465**. Once the spring member **1440***a* is positioned within the holder **1456**, the positioning structures **1462***a*-**1462***d* will return to their undeformed/original state, whereby securing the spring member **1440***a* within the holder **1456** via the retaining means **1465**.

The joined S_J spring assembly **1455** is then inserted within the male terminal body **1472**. The is accomplished by positing the body portion **1460** within the spring receiver **1486** of the male terminal body **1472** and applying a insertion force, F_I that presses both of these components into one another. While the user or assembler is applying this insertion force, F_I, the user or assembler must align the alignment mechanism **1459** with the alignment receptacle **1476** in order to move the male terminal assembly from the un-coupled S_{UC} to the fully coupled state F_C. To align the alignment mechanism **1459** with the alignment receptacle **1476**, the assembler may have to twist the spring assembly **1455** within the male terminal body **1472**. Once the rear extent of the exterior portion **1457***a* is positioned adjacent to an end of male terminal body **1472**, the male terminal assembly **1430** is in the fully coupled state F_C.

A strain relief assembly **1800** includes multiple components, such as a strain relief cap **1810**, which are design to relieve the strain that is placed on the connection between the male terminal assembly **1430** and the wire **1530**. Additional details about this strain relief assembly are disclosed in connection PCT/US2019/36070, which is fully incorporated herein by reference.

2) Female Connector Assembly

The female connector assembly **2000** is primarily composed of the female terminal assembly **2430**. The female terminal assembly **2430** includes a side wall arrangement **2434** that form a female receptacle **2472** that is designed to receive an extent of the male terminal assembly **1430** in order to electrically and mechanically a device coupled to the male connector assembly **1000** to a device that is coupled to the component header **3000**. The cross-sectional shape of the female receptacle **2472** is substantially circular and its diameter is approximately 10.3 mm. As such, this diameter is approximately 5% smaller than the outside diameter of the male terminal assembly **1430** (measured at the widest extent of the contact arms **1494***a*-**1494***d*, which is approximately 10.8 mm). As discussed within PCT/US2019/36070, PCT/US2019/36010, this positional relationship compresses the spring member **1440***a* when the male terminal assembly **1430** is inserted into the female terminal assembly **2430** to ensure that the male terminal assembly **1430** make a proper electrical and mechanical connection with the female terminal assembly **2430**. Additional details about the female terminal assembly **2430** are generally discussed PCT Application Nos. PCT/US2019/36127, PCT/US2019/36070, PCT/US2019/36010 and as such these details will not be repeated here. However, generally the female terminal assembly **2430** may be made for a conductive material (e.g., copper) and may be stamped, pressed, drawn, model, cast, printed, or a similar method of manufacturing may be utilized.

3) Component Header

The component header **3000** is primarily composed of the female housing assembly, which is designed to protect and isolate the female terminal assembly **2430** from external structures. To accomplish this, the intermediate housing assembly **2100** receives the female terminal assembly **2430** within a receiver that is formed by a wall **2160**. Said wall **2160** includes ramped or sloped wall arrangement **2162** that extends reward from the front edge of the housing **2100** and are designed to compress the contact arms **1494** of the terminal assemblies **1430** during the mating of the male and female terminal assemblies **1430**, **2430**. The configuration and design of these ramped or sloped wall arrangement **2162** is described in detail with PCT/US2019/36070, which is incorporated herein. These ramped or sloped wall **2162** has a rear edge that is configured to abut the frontal edge of the female terminal assembly **2430**, when the female terminal assembly **2430** is properly positioned within the component header **3000**.

4) Connecting the Connector System

FIGS. **1-2** show how the high power connector system **100** can move from a disconnected state S_{DCON} to a fully connected state S_{FCON}. The high power connector system **100** can then move from this disconnected state S_{DCON} to a partially connected state, where the contact arms **1494***a*-**1494***d* of the male connector assembly **1000** are about to come into contact with the ramped or sloped surface **2162** of the female connector assembly **2000**. This ramped or sloped surface **2162** gently and smoothly compresses the contact

arms **1494***a*-**1494***p* until they can easily slide into and make contact with the inner surface of the female receptacle **2472**. This process is described in greater detail within PCT/US2019/36070 and is incorporated herein. Once the male connector assembly **1000** is fully connected to the female connector assembly **2000**, the high power connector system **100** has moved from the partially connected state S_{PCON} to the fully connected state S_{FCON}. Finally, a force is applied to the CPA **1170** that causes it to be interact with an extent of the component header **3000**. Once this occurs, the male connector assembly **1000** is locked to the female connector assembly **2000**. Finally, the installer can scan an extent of the CPA **1170** that is visible through the opening within the housing, as described within PCT/US20/49870.

Second Embodiment

As shown in FIGS. **29**-**35**, the second embodiment of the connector system **4100** includes multiple components that are designed to electrically and mechanically connect one device or component to another device or component within a power distribution environment. The second embodiment of the connector system **4100** is primarily composed of: (i) a male connector assembly **5000** and (ii) a female connector assembly **6000**. The male connector assembly **5000** includes: (i) housing assembly **5100**, (ii) a male terminal assembly **5430**, which includes a male terminal **5470**, an internal spring assembly **5455** that includes a spring holder **5456** and a spring member **5440***a*, (iii) a male interlock assembly **5600**, (iv) a strain relief assembly **5800**, and (v) a wire **5495**. The female connector assembly **6000** includes: (i) housing assembly **6100**, and (ii) a female terminal assembly **6430**, which includes a female terminal body **6434** that has a female receptacle **6472**. The only difference between the first and second embodiment of the connector systems **100**, **4100** is the configuration of: (i) housings **1100**, **5100**, **3000**, **6100** and (ii) male terminal connection plate **1474**, **5474**. Otherwise, the terminal assemblies **1430**, **2430**, **5430**, **6430** are identical across the embodiments **100**, **4100**.

Given the substantial overlap between these embodiments, it should be understood that reference numbers that are shown in the figures may be omitted from the specification for sake of brevity as like structures have like numbers. For example, the disclosure in connection with spring member **1440***a* is not repeated herein, but it applies to spring member **5440***a*, as if it were repeated herein. In other words, omitting reference numbers from the specification or specific disclosure of the functionality of that structure should not limit the disclosure of this application. Instead, one shall refer to the disclosure of similar structures that may be discussed within another section of this application or other applications that are incorporated herein by reference.

5) Terminal Properties and Functionality

FIG. **33**-**34** depicts a cross-section of the male connector assembly **5000** coupled to the female connector assembly **6000** in the fully connected state SFC. While the below disclosed is discussed in connection with said second embodiment of the system **4100**, it should be understood that this disclosure applies in equal force to the first embodiment of the system **100**. As best shown in FIG. **33**, shown in the one or more outer surfaces of the spring arms **5452***a*-**5452***d* contact the free ends **5488** of the respective contact arms **5494***a*-**5494***d*. As discussed above, the outermost extent of the contact arms **5494***a*-**5494***d* are slightly larger than the inner extent of the female terminal body **6434**. As such, when these components are mated with one another, the spring member **5440***a* is compressed. This compression of the spring member **5440***a* creates an outwardly directed biasing force SBF against the contact arms **5494***a*-**5494***d* and away from the interior of the spring member **5440***a*.

The male terminal body **5472**, including the contact arms **5494***a*-**5494***d*, may be formed from a first material such as copper, a highly-conductive copper alloy (e.g., C151 or C110), aluminum and/or another suitable electrically conductive material. The first material preferably has an electrical conductivity of more than 80% of IACS (International Annealed Copper Standard, i.e., the empirically derived standard value for the electrical conductivity of commercially available copper). For example, C151 typically has 95% of the conductivity of standard, pure copper compliant with IACS. Likewise, C110 has a conductivity of 101% of IACS. In certain operating environments or technical applications, it may be preferable to select C151 because it has anti-corrosive properties desirable for high-stress and/or harsh weather applications. The first material for the male terminal body **5472** is C151 and is reported, per ASTM B747 standard, to have a modulus of elasticity (Young's modulus) of approximately 115-125 gigapascals (GPa) at room temperature and a coefficient of terminal expansion (CTE) of 17.6 ppm/degree Celsius (from 20-300 degrees Celsius) and 17.0 ppm/degree Celsius (from 20-200 degrees Celsius).

The spring member **5440***a* may be formed from a second material such as spring steel, stainless steel (e.g., 301SS, ¼ hard), and/or another suitable material having greater stiffness (e.g., as measured by Young's modulus) and resilience than the first material of the male terminal body **5472**. The second material preferably has an electrical conductivity that is less than the electrical conductivity of the first material. The second material also has a Young's modulus that may be approximately 193 GPa at room temperature and a coefficient of terminal expansion (CTE) of 17.8 ppm/degree Celsius (from 0-315 degrees Celsius) and 16.9 ppm/degree Celsius (from 0-100 degrees Celsius). In contemplated high-voltage applications, the cross-sectional area of copper alloy forming the first connector is balanced with the conductivity of the selected copper alloy. For example, when a copper alloy having lower conductivity is selected, the contact arms **5494***a*-**5494***d* formed therefrom have a greater cross-sectional area so as to adequately conduct electricity. Likewise, selection of a first material having a higher conductivity may allow for contact arms **5494***a*-**5494***d* having a relatively smaller cross-sectional area while still meeting conductivity specifications.

In an example embodiment, the CTE of the second material may be greater than the CTE of the first material, i.e., the CTE of the spring member **5440***a* is greater than the CTE of the male terminal body **5472**. Therefore, when the assembly of the male terminal body **5472** and the spring member **5440***a* is subjected to the high-voltage and high-temperature environment typical for use of the electrical connector described in the present disclosure, the spring member **5440***a* expands relatively more than the male terminal body **5472**. Accordingly, the outward force SBF produced by the spring member **5440***a* on the contact arms **5494***a*-**5494***d* of the male terminal body **5472** is increased in accordance with the increased temperature, which is reference to below as a thermal spring force, S_{TF}.

An example application of the present disclosure, such as for use in a vehicle alternator, is suitable for deployment in a class 5 automotive environment, such as that found in passenger and commercial vehicles. Class 5 environments are often found under the hood of a vehicle, e.g., alternator,

and present 150° Celsius ambient temperatures and routinely reach 200° Celsius. When copper and/or highly conductive copper alloys are subjected to temperatures above approximately 150° Celsius said alloys become malleable and lose mechanical resilience, i.e., the copper material softens. However, the steel forming the spring member **5440***a* retains hardness and mechanical properties when subjected to similar conditions. Therefore, when the male terminal body **5472** and spring member **5440***a* are both subjected to high-temperature, the first material of the male terminal body **5472** softens and the structural integrity of the spring member **5440***a*, formed from the second material, is retained, such that the force applied to the softened contact arms **5494***a*-**5494***d* by the spring member **5440***a* more effectively displaces the softened contact arms **5494***a*-**5494***d* outward relative the interior of the male terminal body **5472**, in the fully connected position SFC.

The male terminal body **5472**, spring member **5440***a*, and female terminal body **6434**, are configured to maintain conductive and mechanical engagement while withstanding elevated temperatures and thermal cycling resulting from high-power, high-voltage applications to which the connector assembly is subjected. Further, the male terminal body **5472** and female terminal body **6434** may undergo thermal expansion as a result of the elevated temperatures and thermal cycling resulting from high-voltage, high-temperature applications, which increases the outwardly directed force applied by the male terminal body **5472** on the female terminal body **6434**. The configuration of the male terminal body **5472**, spring member **5440***a*, and the female terminal body **6434** increase the outwardly directed connective force therebetween while the connector system **4100** withstands thermal expansion resulting from thermal cycling in the connected position P_C.

Based on the above exemplary embodiment, the Young's modulus and the CTE of the spring member **5440***a* is greater than the Young's modulus and the CTE of the male terminal body **5472**. Thus, when the male terminal body **5472** is used in a high power application that subjects the connector system **4100** to repeated thermal cycling with elevated temperatures (e.g., approximately 150° Celsius) then: (i) the male terminal body **5472** become malleable and loses some mechanical resilience, i.e., the copper material in the male terminal body **5472** softens and (ii) the spring member **5440***a* does not become as malleable or lose as much mechanical stiffness in comparison to the male terminal body **5472**.

Thus, when utilizing a spring member **5440***a* that is mechanically cold forced into shape (e.g., utilizing a die forming process) and the spring member **5440***a* is subjected to elevated temperatures, the spring member **5440***a* will attempt to at least return to its uncompressed state, which occurs prior to insertion of the male terminals assembly **5430** within the female terminal assembly **6430**, and preferably to its original flat state, which occurs prior to the formation of the spring member **5440***a*. In doing so, the spring member **5440***a* will apply a generally outward directed thermal spring force, STF, (as depicted by the arrows labeled "STF" in FIG. **36**) on the free ends **5488** of the contact arms **5494***a*-**5494***d*. This thermal spring force, S_{TF}, is dependent upon local temperature conditions, including high and/or low temperatures, in the environment where the system **4100** is installed. Accordingly, the combination of the spring biasing force, S_{BF}, and the thermal spring force, S_{TF}, provides a resultant biasing force, S_{RBF}, that ensures that the outer surface of the contact arms **5494***a*-**5494***d* are forced into contact with the inner surface of the female terminal body **6434** when the male terminal assembly **2430** is inserted into the female terminal **6430** and during operation of the system **4100** to ensure an electrical and mechanical connection. Additionally, with repeated thermal cycling events, the male terminal assembly **5430** will develop an increase in the outwardly directed resultant spring forces, S_{RBF}, that are applied to the female terminal assembly **6430** during repeated operation of the system **4100**.

Further illustrated in FIGS. **33** and **35**, in the fully connected state S_{FC}, the male terminal assembly **5430** provides 360° compliance with the female terminal assembly **6430** to ensure that a sufficient amount of outwardly directed force F is applied by the male terminal assembly **5430** to the female terminal assembly **6430** for electrical and mechanical connectivity in all four primarily directions. This attribute allows for omission of a keying feature and/or another feature designed to ensure a desired orientation of the components during connection. The 360° compliance attribute of the system **4100** also aids in maintaining mechanical and electrical connection under strenuous mechanical conditions, e.g., vibration. In a traditional blade or fork-shaped connector with 180° compliance, i.e., connection on only two opposing sides, vibration may develop a harmonic resonance that causes the 180° compliant connector to oscillate with greater amplitude at specific frequencies. For example, subjecting a fork-shaped connector to harmonic resonance may cause the fork-shaped connector to open. Opening of the fork-shaped connector during electrical conduction is undesirable because momentary mechanical separation of the fork-shaped connector from an associated terminal may result in electrical arcing. Arcing may have significant negative effects on the 180° compliant terminal as well as the entire electrical system of which the 180° compliant terminal is a component. However, the 360° compliance feature of the present disclosure may prevent the possible catastrophic failures caused by strong vibration and electrical arcing.

6) Related Information for the Systems **100**, **4100**

The system **100**, **4100** is a T4/V4/S3/D2/M2, wherein the system **100**, **4100** meets and exceeds: (i) T4 is exposure of the system **100** to 150° C., (ii) V4 is severe vibration, (iii) S1 is sealed high-pressure spray, (iv) D2 is 200k mile durability, and (v) M2 is less than 45 Newtons of force is required to connect the male terminal assembly **1430**, **3430**, **5430** to the female terminal assembly **2430**, **6430**. In addition to being T4/V4/S3/D2/M2 compliant, the system **100**, **4100** is push, click, tug, scan (PCTS) compliant, wherein additional information about this standard is disclosed within PCT/US2020/049870.

It should be understood that the male terminal assemblies **1430**, **5430** and the female terminal assemblies **2430**, **6430** disclosed within this application having the following specifications regarding carrying at 55° C. rise over ambient (RoA) or 80° C. with a derating of 80%: (i) wherein the diameter of the male terminal assembly **1430** is 6 mm and its rated to carry 153 amps with a 16 mm^2 wire, (ii) wherein the diameter of the male terminal assembly **1430** is 8 mm and its rated to carry 225 amps with a 25 mm^2 wire, (iii) wherein the diameter of the male terminal assembly **1430** is 10 mm and its rated to carry 300 amps with a 50 mm^2 wire, and (iv) wherein the diameter of the male terminal assembly **1430** is 12 mm and its rated to carry 375 amps with a 75 mm^2 wire. In comparison, conventional round connectors sold by Amphenol have the following rating at 80° C. with a derating of 80%: (i) wherein the diameter of the male terminal is 6 mm and its rated to carry 90 amps with a 16

mm^2 wire, (ii) wherein the diameter of the male terminal is 8 mm and its rated to carry 130 amps with a 25 mm^2 wire, and (iii) wherein the diameter of the male terminal is 10 mm and its rated to carry 220 amps with a 50 mm^2 wire. As such, the disclosed connector system **100** provides current carrying capabilities that are substantially higher than the current carry capabilities of conventional round connectors sold by Amphenol. In particular, the disclosed connector system **100** can carry 41% more current with the 6 mm terminal, 42% more current with the 8 mm terminal, and 27% more current with the 10 mm terminal. These substantial increases in current carrying capacity, while meeting the USCAR specifications provides considerable advantages of the prior art connectors.

The spring member **1440***a*, **5440***a* disclosed herein may be replaced with the spring members shown in PCT/US2019/36010 or U.S. Provisional 63/058,061. Further, it should be understood that alternative configurations for connector assembles **1000**, **2000**, **5000**, **6000** are possible. For example, any number of male terminal assemblies **1430**, **5430** (e.g., between 2-30, preferably between 2-8, and most preferably between 2-4) may be positioned within a housing **1100**, **5100**. Additionally, alternative configurations for connector systems **100**, **4100** are possible. For example, the female connector assembly **2000**, **6000** may be reconfigured to accept these multiple male terminal assemblies **1430**, **5430** into a single female terminal assembly **2430**, **6430**.

It should also be understood that the male terminal assemblies may have any number of contact arms **1494**, **5494** (e.g., between 2-100, preferably between 2-50, and most preferably between 2-8) and any number of spring arms **1452**, **5452** (e.g., between 2-100, preferably between 2-50, and most preferably between 2-8). As discussed above, the number of contact arms **1494**, **5494** may not equal the number of spring arms. For example, there may be more contact arms **1494**, **5494** then spring arms **1452**, **5452**. Alternatively, there may be less contact arms **1494**, **5494** then spring arms **1452**, **5452**.

Materials and Disclosure that are Incorporated by Reference

PCT Application Nos. PCT/US21/43686, PCT/US2021/033446, PCT/US2020/050018, PCT/US2020/049870, PCT/US2020/014484, PCT/US2020/013757, PCT/US2019/036127, PCT/US2019/036070, PCT/US2019/036010, and PCT/US2018/019787, U.S. patent application Ser. No. 16/194,891 and U.S. Provisional Applications 62/681,973, 62/792,881, 62/795,015, 62/897,658 62/897,962, 62/988,972, 63/051,639, 63/058,061, 63/068,622, 63/109,135, 63/159,689, 63/222,859, each of which is fully incorporated herein by reference and made a part hereof.

SAE Specifications, including: J1742_201003 entitled, "Connections for High Voltage On-Board Vehicle Electrical Wiring Harnesses—Test Methods and General Performance Requirements," last revised in March 2010, each of which is fully incorporated herein by reference and made a part hereof.

ASTM Specifications, including: (i) D4935—18, entitled "Standard Test Method for Measuring the Electromagnetic Shielding Effectiveness of Planar Materials," and (ii) ASTM D257, entitled "Standard Test Methods for DC Resistance or Conductance of Insulating Materials," each of which are fully incorporated herein by reference and made a part hereof.

American National Standards Institute and/or EOS/ESD Association, Inc Specifications, including: ANSFESD STM11.11 Surface Resistance Measurements of Static Dissipative Planar Materials, each of which is fully incorporated herein by reference and made a part hereof.

DIN Specification, including Connectors for electronic equipment—Tests and measurements—Part 5-2: Current-carrying capacity tests; Test 5b: Current-temperature derating (IEC 60512-5-2:2002), each of which are fully incorporated herein by reference and made a part hereof.

USCAR Specifications, including: (i) SAE/USCAR-2, Revision 6, which was last revised in February 2013 and has ISBN: 978-0-7680-7998-2, (ii) SAE/USCAR-12, Revision 5, which was last revised in August 2017 and has ISBN: 978-0-7680-8446-7, (iii) SAE/USCAR-21, Revision 3, which was last revised in December 2014, (iv) SAE/USCAR-25, Revision 3, which was revised on March 2016 and has ISBN: 978-0-7680-8319-4, (v) SAE/USCAR-37, which was revised on August 2008 and has ISBN: 978-0-7680-2098-4, (vi) SAE/USCAR-38, Revision 1, which was revised on May 2016 and has ISBN: 978-0-7680-8350-7, each of which are fully incorporated herein by reference and made a part hereof.

Other standards, including Federal Test Standard 101C and 4046, each of which is fully incorporated herein by reference and made a part hereof. While some implementations have been illustrated and described, numerous modifications come to mind without significantly departing from the spirit of the disclosure; and the scope of protection is only limited by the scope of the accompanying claims. For example, the overall shape of the of the components described above may be changed to: a triangular prism, a pentagonal prism, a hexagonal prism, octagonal prism, sphere, a cone, a tetrahedron, a cuboid, a dodecahedron, an icosahedron, an octahedron, a ellipsoid, or any other similar shape.

It should be understood that the following terms used herein shall generally mean the following:

a. "High power" shall mean (i) voltage between 20 volts to 600 volts regardless of current or (ii) at any current greater than or equal to 80 amps regardless of voltage.
b. "High current" shall mean current greater than or equal to 80 amps regardless of voltage.
c. "High voltage" shall mean a voltage between 20 volts to 600 volts regardless of current.

Headings and subheadings, if any, are used for convenience only and are not limiting. The word exemplary is used to mean serving as an example or illustration. To the extent that the term includes, have, or the like is used, such term is intended to be inclusive in a manner similar to the term comprise as comprise is interpreted when employed as a transitional word in a claim. Relational terms such as first and second and the like may be used to distinguish one entity or action from another without necessarily requiring or implying any actual such relationship or order between such entities or actions.

Phrases such as an aspect, the aspect, another aspect, some aspects, one or more aspects, an implementation, the implementation, another implementation, some implementations, one or more implementations, an embodiment, the embodiment, another embodiment, some embodiments, one or more embodiments, a configuration, the configuration, another configuration, some configurations, one or more configurations, the subject technology, the disclosure, the present disclosure, other variations thereof and alike are for convenience and do not imply that a disclosure relating to such phrase(s) is essential to the subject technology or that such disclosure applies to all configurations of the subject technology. A disclosure relating to such phrase(s) may apply to all configurations, or one or more configurations. A disclosure relating to such phrase(s) may provide one or more examples. A phrase such as an aspect or some aspects

may refer to one or more aspects and vice versa, and this applies similarly to other foregoing phrases.

Numerous modifications to the present disclosure will be apparent to those skilled in the art in view of the foregoing description. Preferred embodiments of this disclosure are described herein, including the best mode known to the inventors for carrying out the disclosure. It should be understood that the illustrated embodiments are exemplary only, and should not be taken as limiting the scope of the disclosure.

The invention claimed is:

1. An electrical connector system for use in a power distribution assembly, the electrical connector system comprising:

an electrically conductive male terminal body having (i) a side wall arrangement with a substantially cylindrical configuration, the side wall arrangement defining a spring receiver, and (ii) a contact arm extending from a first side wall of the side wall arrangement, the contact arm having:

(a) a first lateral edge,

(b) a second lateral edge,

(c) a first contact arm extent coupled to the first side wall and having a first width that extends between the first and second lateral edges, and

(d) a second contact arm extent coupled to the first contact arm extent and having a second width that extends between the first and second lateral edges, and wherein the second width is greater than the first width; and

an internal spring member dimensioned to reside within the spring receiver of the male terminal body, the spring member comprising at least one spring arm having a radially outward bias,

wherein, when the spring member is inserted into the spring receiver, the at least one spring arm underlies at least a portion of the second contact arm extent of the contact arm and independently applies a radially outward force on the contact arm.

2. The electrical connector system according to claim **1**, wherein in a fully coupled state S_{FC}, the internal spring member is positioned within the spring receiver of the male terminal body and the contact arm includes a free-end that resides against an outer surface of the spring arm.

3. The electrical connector system according to claim **1**, further comprising a spring holder having (i) a first portion configured to abut an extent of a frontal segment of the male terminal body in a joined state J_S and (ii) a second portion configured to receive the internal spring member.

4. The electrical connector system of claim **3**, wherein the first portion of the spring holder includes an alignment mechanism that is received by an alignment receptacle formed in the frontal segment of the male terminal body; and

wherein the alignment mechanism and the alignment receptacle interact to maintain alignment of the internal spring member within the male terminal body.

5. The electrical connector system of claim **3**, wherein the second portion of the spring holder includes a retaining member configured to secure the internal spring member within the spring holder.

6. The electrical connector system of claim **5**, wherein the retaining member includes two lateral beams that are configured to be positioned rearward of a rear wall of the internal spring member when the internal spring member and the spring holder are in the joined state J_S.

7. The electrical connector system of claim **1**, further comprising a spring holder with a spring aperture positioned between a first positioning structure of the spring holder and a second positioning structure of the spring holder; and

wherein the first positioning structure is configured to be positioned on a first side of the spring arm and the second positioning structure is configured to be positioned on a second side of the spring arm opposite the first side of the spring arm when the internal spring member and the spring holder are in a joined state J_S.

8. The electrical connector system of claim **1**, further comprising a spring holder having a spring aperture with: (i) a frontal portion, and (ii) a rear portion that extends rearwardly from the frontal portion of the spring aperture; and

wherein the frontal portion of the spring aperture is larger than the rear portion of the spring aperture.

9. The electrical connector system of claim **1**, wherein the male terminal body has a 8 mm outer diameter, a current carrying capacity of 225 amps at a derating of 80% at 80° C., and does not include a lever assist.

10. The electrical connector system of claim **1**, wherein the male terminal body has a 10 mm outer diameter, a current carrying capacity of 300 amps at a derating of 80% at 80° C., and does not include a lever assist.

11. The electrical connector system of claim **1**, wherein the electrical connector system meets SAE/USCAR-2 Revision 6 specifications.

12. An electrical connector system in a power distribution assembly, the electrical connector system comprising:

an electrically conductive male terminal body having a spring receiver and a side wall, wherein the side wall includes a contact arm with:

(i) a first lateral edge with a first notch formed therein, wherein the first notch has a first portion and a second portion,

(ii) a second lateral edge with a second opposed notch formed therein, wherein the second notch has a first portion and a second portion,

(iii) a first contact arm extent that extends from the side wall to the first portions of the first and second notches, and wherein the first contact arm extent has a first width that extends between the first and second lateral edges,

(iv) a second contact arm extent that extends from the second portions of the first and second notches to a free-end, and wherein the second contact arm extent has a second width that extends between the first and second lateral edges; and

an internal spring member dimensioned to completely reside within the spring receiver of the male terminal body, the spring member having at least one spring arm having a radially outward bias,

wherein, when the spring member is inserted into the spring receiver, the at least one spring arm underlies an extent of the contact arm and independently applies a radially outward force on the contact arm.

13. The electrical connector system according to claim **12**, wherein a fully coupled state S_{FC}, the internal spring member is positioned within the spring receiver of the male terminal body and the free-end of the contact arm resides against an outer surface of the spring arm.

14. The electrical connector system according to claim **12**, wherein the side wall of the electrically conductive male terminal body includes a contact arm opening with:

(i) a first contact arm opening width extending between the first lateral edge of the first contact arm extent and a first internal edge of the side wall,

(ii) a second contact arm opening width extending between the first lateral edge of the second contact arm extent and the first internal edge of the side wall, and

(iii) wherein the first contact arm opening width is less than the second contact arm opening width.

15. The electrical connector system according to claim **14**, wherein the electrically conductive male terminal body includes a frontal segment coupled to the side wall and positioned forward of the contact arm opening.

16. The electrical connector system according to claim **15**, further comprising a spring holder having (i) a first portion configured to abut an extent of the frontal segment of the male terminal body in a joined state J_S and (ii) a second portion configured to receive the internal spring member.

17. The electrical connector system according to claim **12**, further comprising a spring holder with (i) a first portion configured to be positioned outside of the spring receiver in a joined state J_S and (ii) a second portion configured to be positioned inside of the spring receiver in the joined state J_S.

18. The electrical connector system of claim **17**, wherein the first portion of the spring holder includes an alignment mechanism that is received by an alignment receptacle formed in the male terminal body in the joined state J_S, and

wherein the alignment mechanism and the alignment receptacle function together in order to maintain alignment the internal spring member within the male terminal body in the joined state J_S.

19. The electrical connector system of claim **18**, wherein the second portion of the spring holder includes a retaining member configured to secure the internal spring member within the spring holder.

20. The electrical connector system of claim **12**, wherein the male terminal body has a 8 mm outer diameter, a current carrying capacity of 225 amps at a derating of 80% at 80° C., and does not include a lever assist.

21. The electrical connector system of claim **12**, wherein the electrical connector system meets SAE/USCAR-2 Revision 6 specification.

22. The electrical connector system of claim **12**, further including a male housing assembly configured to partially encase the electrically conductive male terminal body, and wherein the male housing assembly further includes a connector position assurance component.

23. An electrical connector system for use in a power distribution assembly, the electrical connector system comprising:

an electrically conductive male terminal body comprising a side wall with a contact arm, the male terminal body defining a spring receiver and an alignment receptacle, wherein the male terminal body has a substantially cylindrical configuration; and

an internal spring assembly including:

(i) an internal spring member having at least one spring arm having a radially outward bias, wherein, when the spring member is inserted into the spring receiver, the at least one spring arm underlies at least a portion of the contact arm and independently applies a radially outward force on the contact arm; and

(ii) a spring holder dimensioned to reside within the spring receiver, the spring holder having an alignment mechanism that is positioned within the alignment receptacle in a joined state J_S to ensure alignment of the internal spring member within the male terminal body.

24. The electrical connector system of claim **23**, wherein a rear portion of the spring holder includes a retaining member configured to secure the internal spring member within the spring holder.

25. The electrical connector system of claim **24**, wherein the retaining member includes two lateral beams that are configured to be positioned rearward of a rear wall of the internal spring member when the internal spring member and the spring holder are in the joined state J_S.

26. The electrical connector system of claim **23**, wherein the spring holder includes a spring aperture located between a first positioning structure of the spring holder and a second positioning structure of the spring holder; and

wherein the first positioning structure is configured to be positioned on a first side of the spring arm and the second positioning structure is configured to be positioned on a second side of the spring arm opposite of the first side of the spring arm when the internal spring member and the spring holder are in the joined state J_S.

27. The electrical connector system of claim **26**, wherein the spring aperture includes (i) a frontal portion that is positioned near the alignment mechanism and (ii) a rear portion that extends rearwardly from the frontal portion of the spring aperture; and

wherein the frontal portion of the spring aperture is larger than the rear portion of the spring aperture.

28. The electrical connector system according to claim **23**, wherein the contact arm of the male terminal body extends (i) away from a rear portion of the electrically conductive male terminal body, (ii) across an extent of a contact arm opening, and (iii) towards a front portion of the electrically conductive male terminal body.

29. The electrical connector system according to claim **28**, wherein the contact arm opening includes:

(i) a first contact arm opening width extending between a first lateral edge of the contact arm and a first internal edge of the side wall,

(ii) a second contact arm opening width extending between the first lateral edge of the contact arm and the first internal edge of the side wall, and

wherein the first contact arm opening width is less than the second contact arm opening width.

30. The electrical connector system according to claim **28**, wherein the contact arm includes:

(i) a first lateral edge with a first notch formed therein, wherein the first notch has a first portion and a second portion,

(ii) a second lateral edge with a second opposed notch formed therein, wherein the second notch has a first portion and a second portion,

(iii) a first contact arm extent that extends from the side wall to the first portions of the first and second notches, and wherein the first contact arm extent has a first width that extends between the first and second lateral edges, and

(iv) a second contact arm extent that extends from the second portions of the first and second notches to a free-end, and wherein the second contact arm extent has a second width that extends between the first and second lateral edges.

31. The electrical connector system of claim **23**, further including an electrically conductive female terminal body with a receptacle dimensioned to receive a portion of both the male terminal body and the internal spring member residing within the spring receiver of the male terminal body to define a fully connected state S_{FC}; and

wherein the electrically conductive male terminal body includes the side wall with the contact arm having a free end, wherein the free end of the contact arm is configured to be displaced inward from an original position when the electrical connector system is in the fully connected state S_{FC}.

32. The electrical connector system of claim **23**, wherein the male terminal body has a 8 mm outer diameter, a current carrying capacity of 225 amps at a derating of 80% at 80° C., and does not include a lever assist.

* * * * *