US 20250273507A1

(19) United States
(12) Patent Application Publication
ISHIKAWA et al.
(10) Pub. No.: US 2025/0273507 A1
(43) Pub. Date: Aug. 28, 2025

(54) **MEMBER FOR SEMICONDUCTOR MANUFACTURING EQUIPMENT**

(71) Applicant: **NGK INSULATORS, LTD.**, Nagoya-Shi (JP)

(72) Inventors: **Masaki ISHIKAWA**, Handa-Shi (JP); **Tatsuya KUNO**, Nagoya-Shi (JP); **Taro USAMI**, Ginan-Cho (JP); **Natsuki HIRATA**, Nagoya-Shi (JP); **Yusuke OGISO**, Nagakute-Shi (JP); **Hideaki HASHIMOTO**, Nisshin-Shi (JP)

(73) Assignee: **NGK INSULATORS, LTD.**, Nagoya-Shi (JP)

(21) Appl. No.: **18/814,783**

(22) Filed: **Aug. 26, 2024**

Related U.S. Application Data

(63) Continuation of application No. PCT/JP2024/006631, filed on Feb. 22, 2024.

Publication Classification

(51) **Int. Cl.**
H01L 21/687 (2006.01)

(52) **U.S. Cl.**
CPC .. ***H01L 21/68785*** (2013.01); ***H01L 21/68757*** (2013.01)

(57) **ABSTRACT**

A member for a semiconductor manufacturing equipment that uses a discharge suppression technology different from conventional ones is provided. A member for a semiconductor manufacturing equipment includes: a ceramic substrate having an upper surface on which a wafer is to be placed and a lower surface; a plug placement hole that vertically penetrates the ceramic substrate; and a plug embedded in the plug placement hole; wherein the plug is composed of a dense body, including an upper end surface exposed on a side of the upper surface, a lower end surface exposed on a side of the lower surface, and a gas passage; and wherein a maximum height D_1 in the vertical direction from the upper end opening to a surface of the gas passage, and a maximum height D_2 from the lower end opening to the surface of the gas passage satisfies a relationship: $D_1<D_2$.

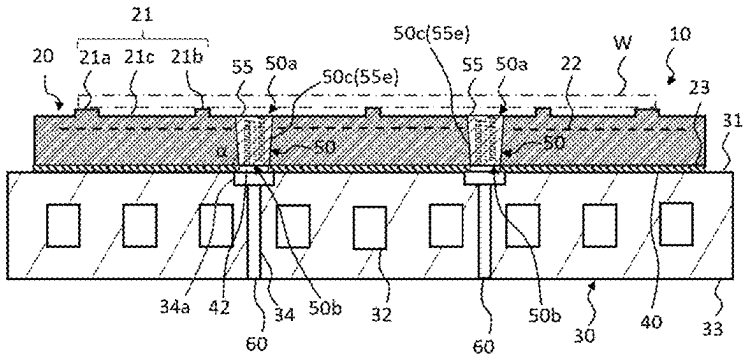

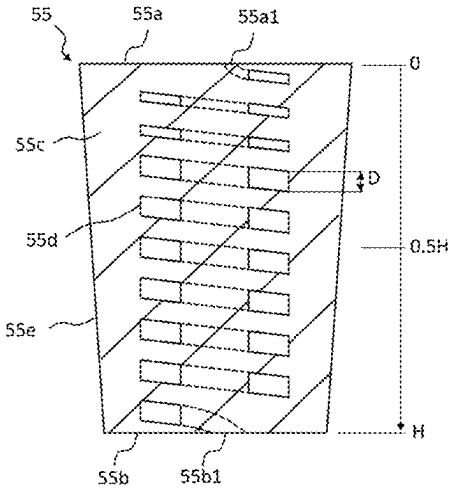

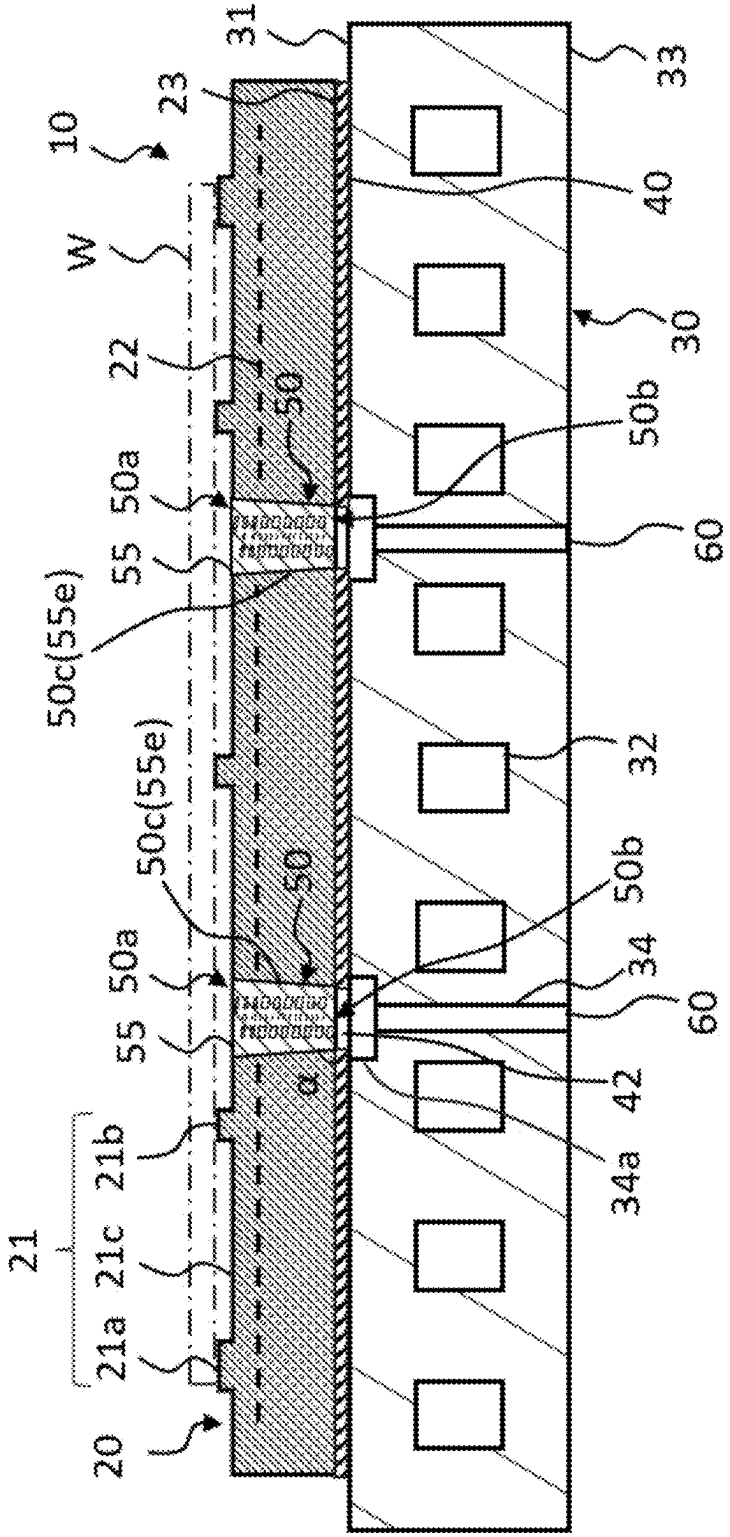
10
W
20
21
21a
21c
21b
55
50a
50c(55e)
50
22
23
31
α
42
34a
34
50b
60
32
40
30
33

FIG. 1-1

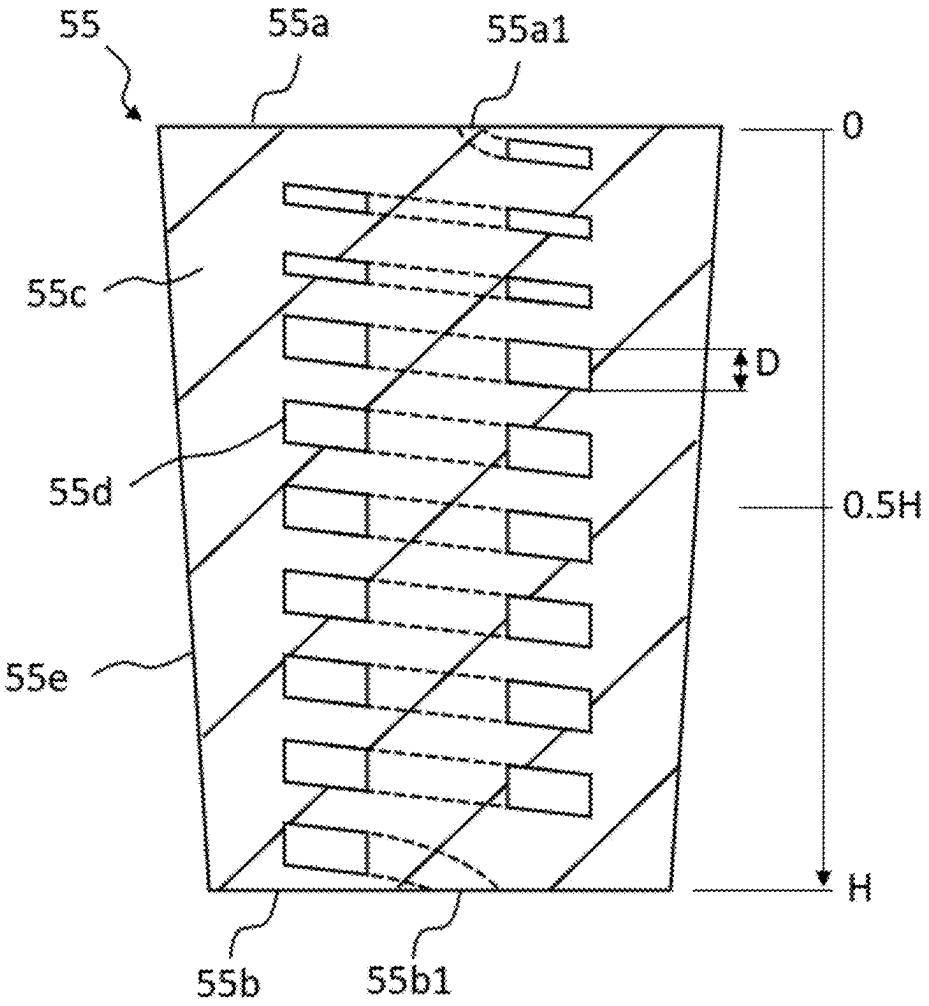

FIG. 1-2

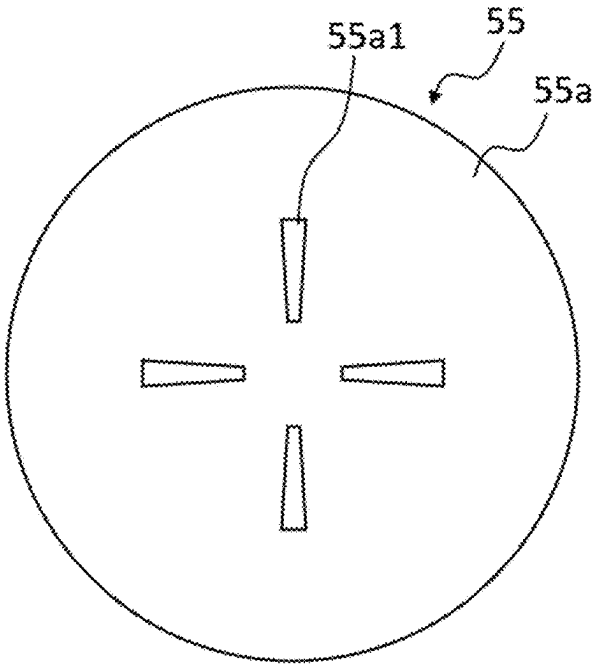

FIG. 1-3

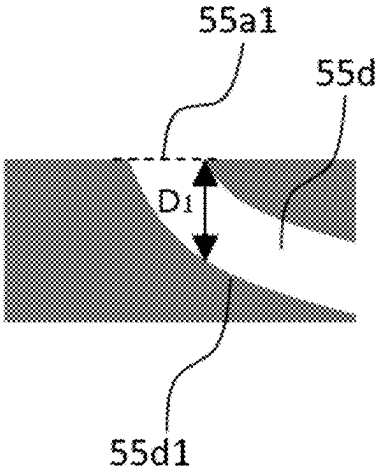

FIG. 1-4

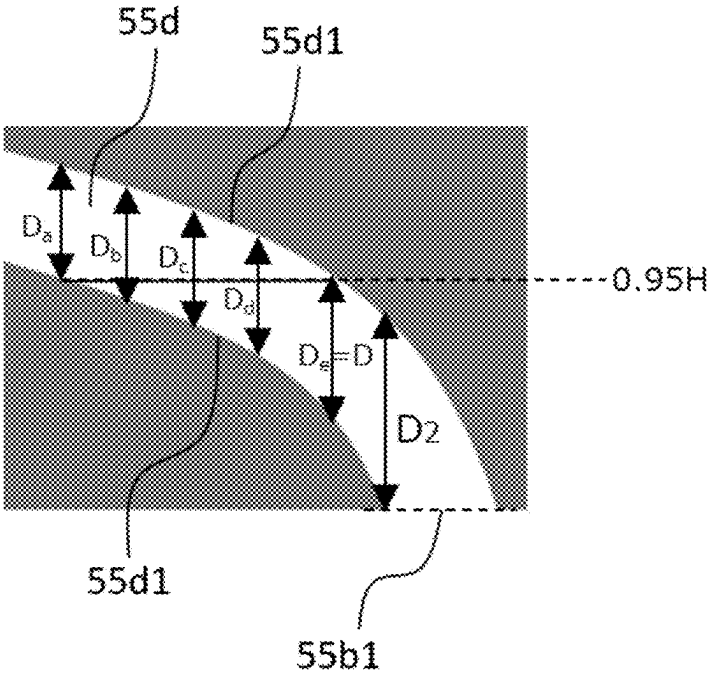

FIG. 1-5

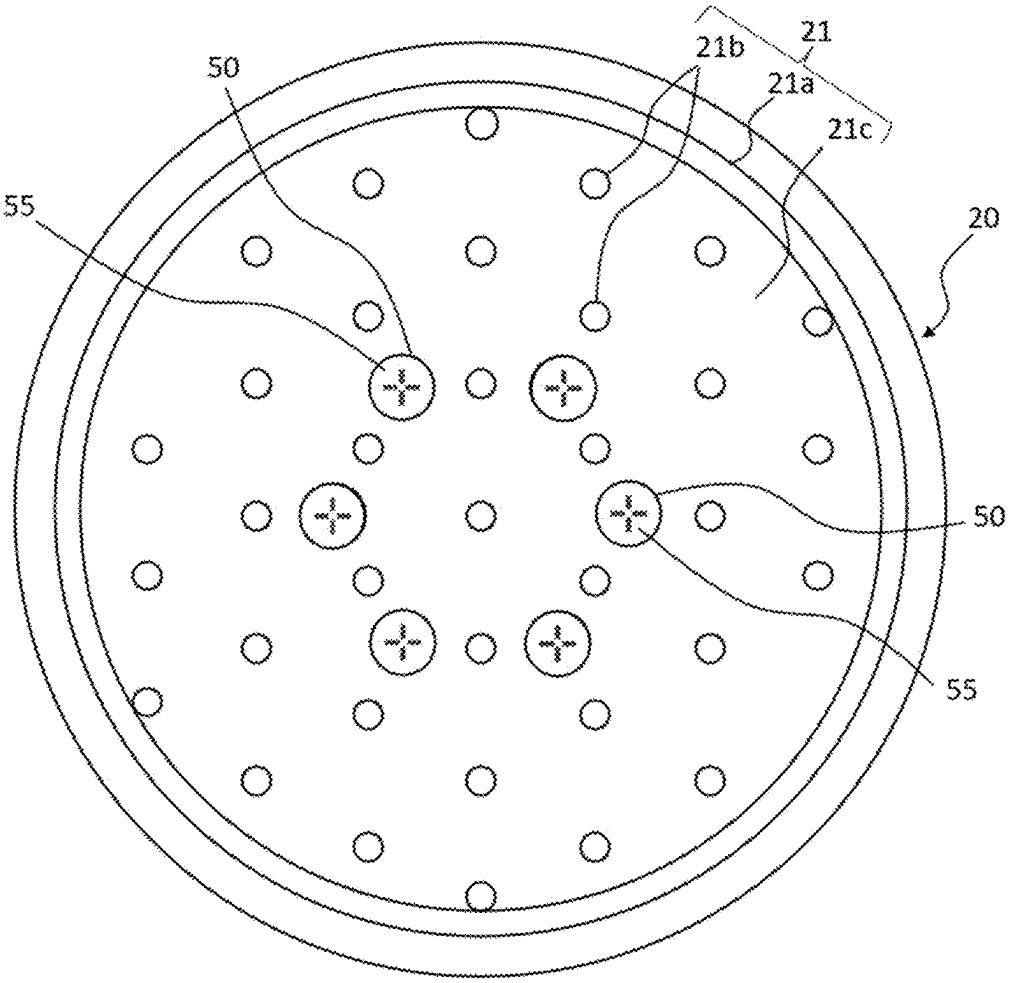

FIG. 1-6

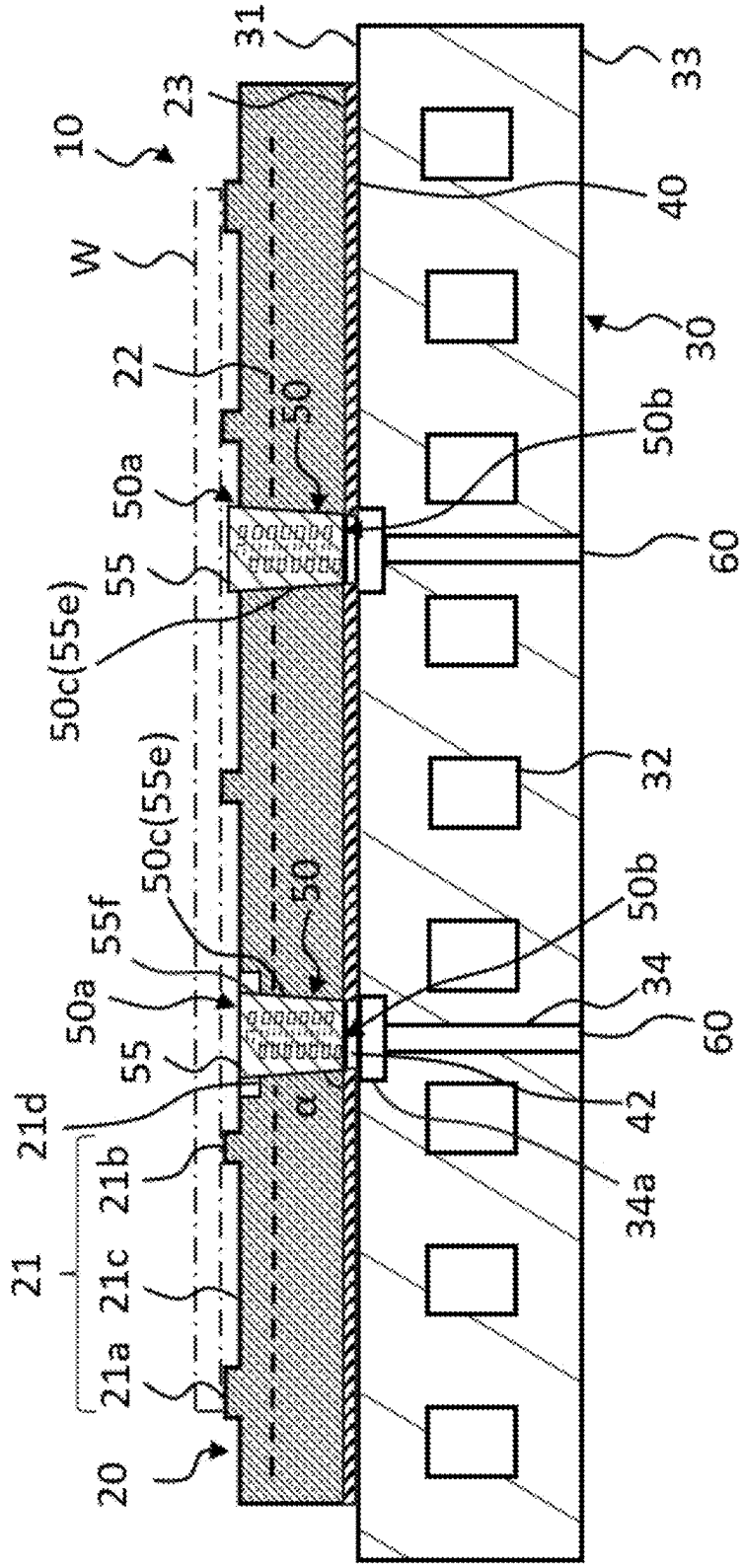
10
W
23
31
33
40
30
22
50
50a
50b
60
55
50c(55e)
32
50c(55e)
55f
50
50b
50a
34
60
55
α
42
21d
21b
34a
21
21c
21a
20

FIG. 2-1

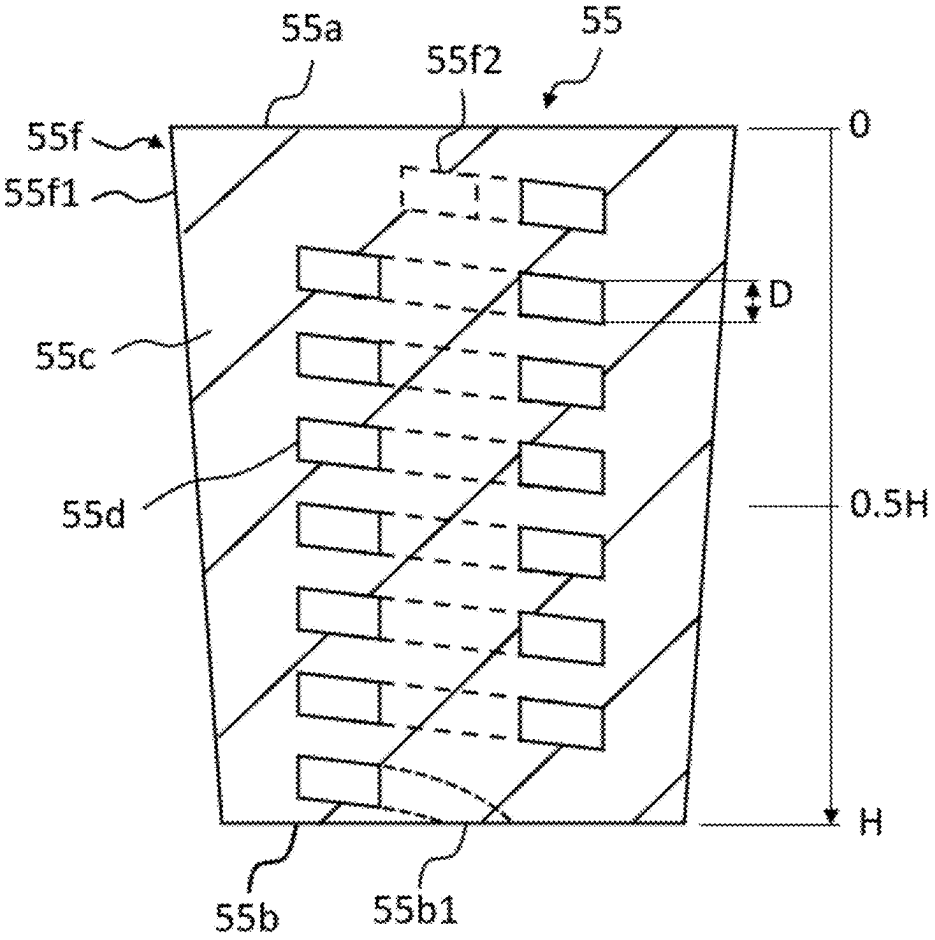

FIG. 2-2

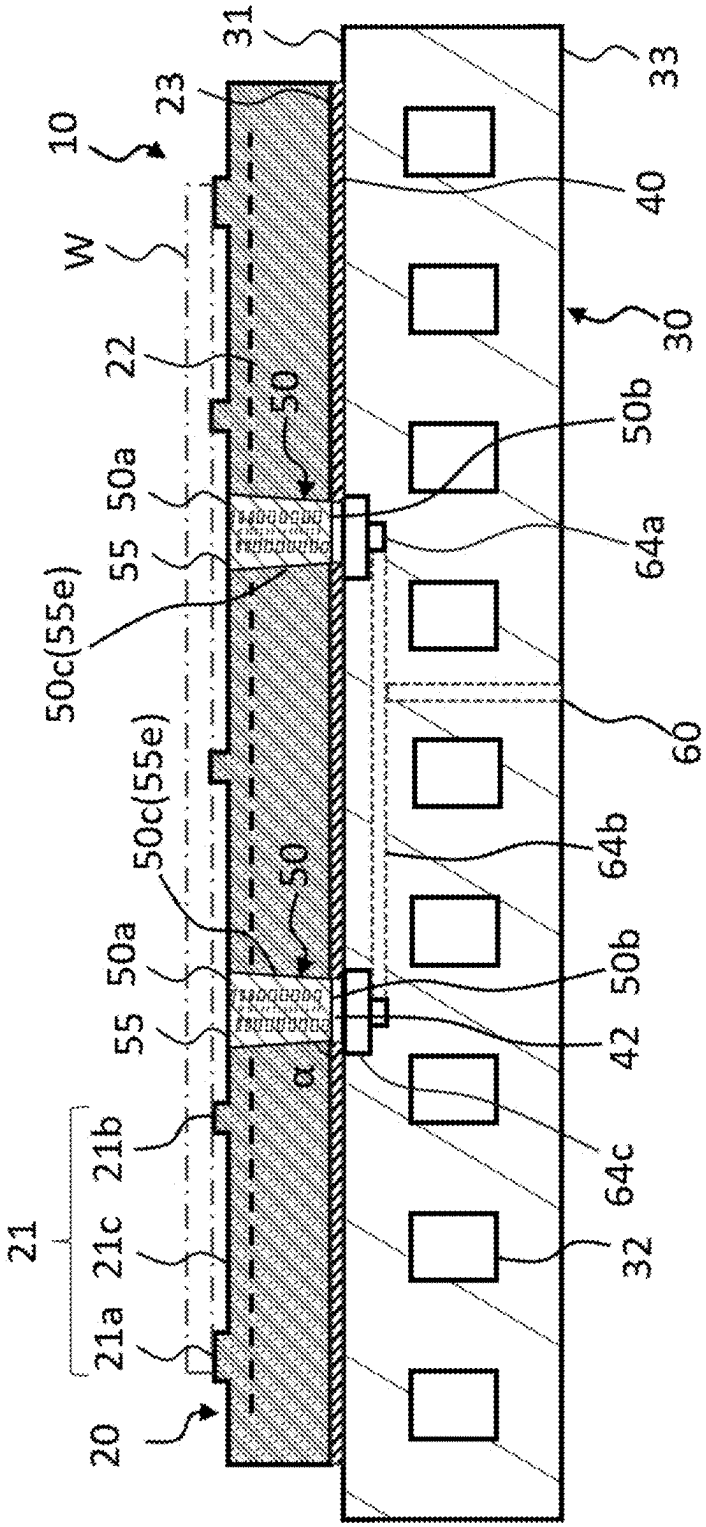
10
W
23
31
22
50
50a
55
50c(55e)
50c(55e)
50
50a
55
a
21b
21c
21
21a
20
33
40
30
50b
64a
60
64b
50b
42
64c
32

FIG. 3

FIG. 4A

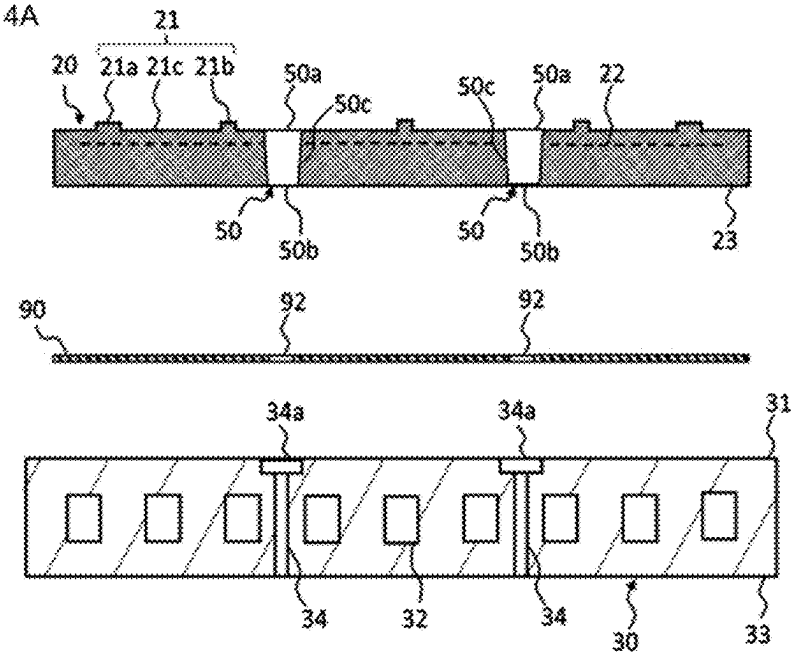

FIG. 4B

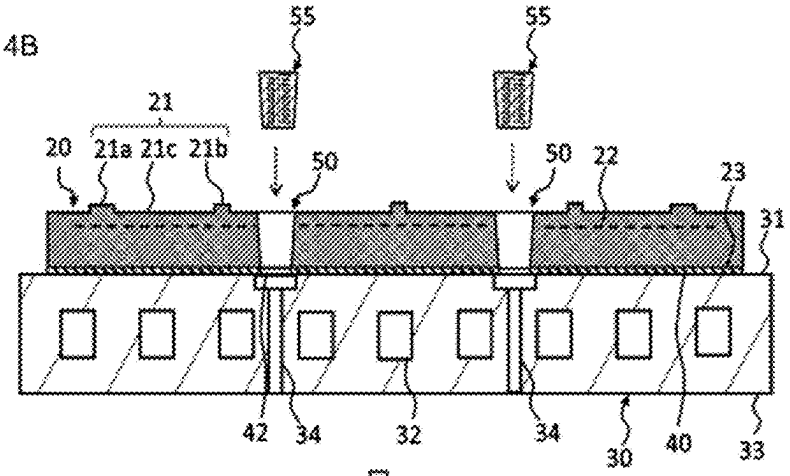

FIG. 4C

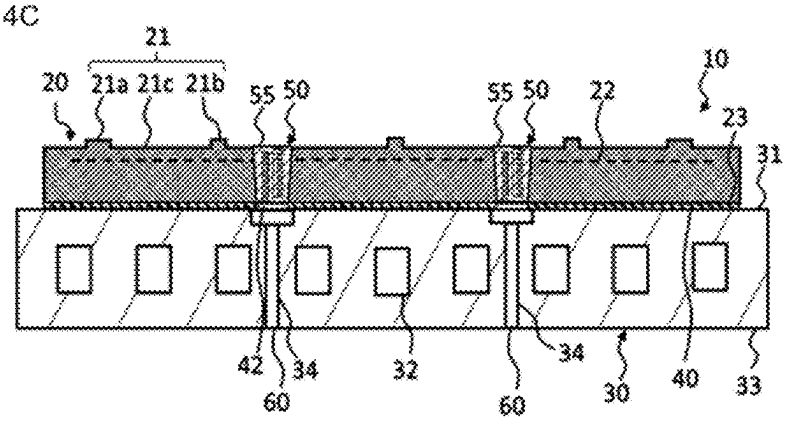

MEMBER FOR SEMICONDUCTOR MANUFACTURING EQUIPMENT

CROSS REFERENCE TO RELATED APPLICATIONS

[0001] The present invention claims the benefit of priority to International Patent Application PCT/JP2024/6631 filed on Feb. 22, 2024 with the Japanese Patent Office, the entire contents of which are incorporated herein by reference in its entirety.

FIELD OF THE INVENTION

[0002] The present invention relates to a member for a semiconductor manufacturing equipment.

BACKGROUND OF THE INVENTION

[0003] Conventionally, members for semiconductor manufacturing equipment used for holding, temperature control, transporting, or the like of wafers have been known. These types of members for semiconductor manufacturing equipment are also called a wafer placement table, an electrostatic chuck, a susceptor, or the like. Generally, they have the function of applying electrical power for electrostatic adsorption to an internal electrode and adsorbing a wafer using electrostatic force. Some members are known that have a function of controlling the temperature of the wafer by flowing gas between the wafer placement surface and the wafer, which is the object to be adsorbed.

[0004] An example of a known member for semiconductor manufacturing equipment includes a ceramic substrate having an upper surface on which a wafer is to be placed, a gas passage portion that vertically penetrates the ceramic substrate, and a conductive base plate bonded to the lower surface of the ceramic substrate. At the time of wafer processing, cooling gas such as helium gas is introduced into the back surface of the wafer through a gas passage portion.

[0005] In such a member for a semiconductor manufacturing equipment, a large potential difference the wafer may occur, and discharge (insulation breakdown) may occur between the wafer and the base plate via the gas passage portion. For this reason, various techniques for arranging plugs in a gas passage portion have been studied in order to suppress discharge. Plugs are often composed of porous materials. If there is no plug, for example, when gas molecules are ionized by the application of an RF voltage, the generated electrons are accelerated and collide with other gas molecules, causing a glow discharge and eventually an arc discharge. However, if there is a plug, it suppresses the discharge because the electrons hit the plug before colliding with other gas molecules.

[0006] Patent Literature 1 proposes a plug having a gas flow passage section that penetrates in flexion a dense main body portion in the thickness direction. It has also been proposed that at least a portion of the entire length of the gas flow passage section be made porous and insulating.

[0007] Patent Literature 2 discloses an electrostatic chuck, comprising a ceramic dielectric substrate having a first main surface on which an object to be attracted is placed and a second main surface opposite to the first main surface; a base plate that supports the ceramic dielectric substrate and has a gas introduction path; and a first porous portion provided between the base plate and the first main surface of the ceramic dielectric substrate and facing the gas introduction path; characterized in that the ceramic dielectric substrate has a first main surface and a first hole portion located between the first main surface and the first porous portion; the first porous portion has a porous portion having a plurality of pores, and a first dense portion that is denser than the porous portion; and configured such that when projected onto a plane perpendicular to a first direction from the base plate to the ceramic dielectric substrate, the first dense portion and the first hole portion overlap, but the porous portion and the first hole portion do not overlap.

[0008] Patent Literature 3 discloses an electrostatic chuck, comprising a ceramic dielectric substrate having a first main surface on which an object to be attracted is placed and a second main surface opposite to the first main surface; a base plate that supports the ceramic dielectric substrate and has a gas introduction path; and a first porous portion provided between the base plate and the first main surface of the ceramic dielectric substrate and facing the gas introduction path; characterized in that the first porous portion has a plurality of sparse portions having a plurality of pores, and a dense portion having a density higher than the density of the sparse portion; each of the plurality of sparse portions extends in a first direction from the base plate toward the ceramic dielectric substrate; the dense portion is located among the plurality of sparse portions; the sparse portion has the holes and a wall portion provided among the holes; and in a second direction substantially perpendicular to the first direction, the minimum dimension of the wall portion is smaller than the minimum dimension of the dense portion.

[0009] Patent Literature 4 describes an invention that aims to provide a holding device that can control the temperature of an object with high accuracy while reducing the occurrence of abnormal discharge. Specifically, it describes a holding device comprising a ceramic substrate having a first surface that holds an object and a second surface located on the opposite side of the first surface; a base member disposed on the second surface side of the ceramic substrate, the base member having a third surface located on the opposite side of the ceramic substrate; and a bonding material disposed between the ceramic substrate and the base member; wherein (1) a passage is formed in the ceramic substrate and the base member to allow fluid to communicate between an outflow hole provided on the first surface and an inflow hole provided on the third surface, or (2) a passage is formed in the ceramic substrate to enable fluid to communicate between an outflow hole provided on the first surface and an inflow hole provided on the second surface; wherein the passage is provided with a porous ceramic region and the porous ceramic region comprises a sparse region and a dense region having a lower porosity than the sparse region and disposed closer to the first surface than the sparse region.

[0010] Patent Literature 5 discloses a wafer placement table in which an insulating first porous portion disposed within the through hole of the ceramic plate, and an insulating second porous portion fitted into a recess provided on the ceramic plate side of the base plate so as to face the first porous portion are provided. The gas supplied to the gas introduction path passes through the second porous portion and the first porous portion, flows into the space between the wafer placement surface and the wafer, and is used to cool the object. It is described that due to the presence of the first porous portion and the second porous portion, it is possible to suppress the occurrence of electrical discharge (arc discharge) caused by plasma upon processing wafers while

ensuring the gas flow rate from the gas introduction passage to the wafer placement surface.

PRIOR ART

Patent Literature

[0011] [Patent Literature 1] Japanese Patent Application Publication No. 2022-119338

[0012] [Patent Literature 2] Japanese Patent Application Publication No. 2022-31333

[0013] [Patent Literature 3] Japanese Patent Application Publication No. 2019-165194

[0014] [Patent Literature 4] Japanese Patent Application Publication No. 2022-176701

[0015] [Patent Literature 5] Japanese Patent Application Publication No. 2020-72262

SUMMARY OF THE INVENTION

[0016] As described above, various techniques have been proposed for semiconductor manufacturing equipment members to improve the structure in the vicinity of a plug disposed in a gas passage portion that vertically penetrates a ceramic substrate in order to suppress the electrical discharge that occurs between the wafer and the base plate. However, discharge is likely to occur in wafer processing such as deep etching in which high-power plasma is used. For this reason, measures against discharge are required more than ever before.

[0017] Therefore, it is desirable to develop a new discharge suppression technology. By combining such a new discharge suppression technology with the conventional discharge suppression technology, a further discharge suppression effect can also be expected. Therefore, an object of an embodiment of the present invention is to provide a member for a semiconductor manufacturing equipment that uses a discharge suppression technology different from conventional ones.

[0018] The present inventor has made extensive studies to solve the above problems, and has created the present invention as exemplified below.

[Aspect 1]

[0019] A member for a semiconductor manufacturing equipment, comprising:

[0020] a ceramic substrate having an upper surface on which a wafer is to be placed and a lower surface; a plug placement hole that vertically penetrates the ceramic substrate; and a plug embedded in the plug placement hole;

[0021] wherein the plug is composed of a dense body, comprising an upper end surface exposed on a side of the upper surface, a lower end surface exposed on a side of the lower surface, and a gas passage that penetrates an inside of the dense body and extends from an upper end opening provided on the upper end surface to a lower end opening provided on the lower end surface; and

[0022] wherein a maximum height D_1 in the vertical direction from the upper end opening to a surface of the gas passage, and a maximum height D_2 in the vertical direction from the lower end opening to the surface of the gas passage satisfies a relationship: $D_1<D_2$.

[Aspect 2]

[0023] The member for a semiconductor manufacturing equipment according to aspect 1, wherein a relationship: $0.1 \leq D_1/D_2 \leq 0.9$ is satisfied.

[Aspect 3]

[0024] The member for a semiconductor manufacturing equipment according to aspect 1 or 2, wherein the maximum height D_1 is 10 to 300 μm.

[Aspect 4]

[0025] The member for a semiconductor manufacturing equipment according to any one of aspect 1 to 3, wherein the maximum height D_2 is 50 to 500 μm.

[Aspect 5]

[0026] The member for a semiconductor manufacturing equipment according to any one of aspect 1 to 4, wherein taking a coordinate axis in the vertical direction, and assuming a coordinate of the upper end surface of the plug is 0, and a coordinate value of the lower end surface is H, a height D of the gas passage in the vertical direction satisfies a relationship: $D \geq 1.5\ D_1$ at least within a range of coordinate value from 0.5×H to 1.0×H.

[Aspect 6]

[0027] The member for a semiconductor manufacturing equipment according to aspect 5, wherein the height D of the gas passage in the vertical direction satisfies a relationship: $D_1 \leq D < 1.5\ D_1$ at least within a range of coordinate value from 0 to less than 0.1×H.

[Aspect 7]

[0028] The member for a semiconductor manufacturing equipment according to any one of aspect 1 to 6, wherein the plug comprises a plurality of gas passages, and for all of the plurality of gas passages, the relationship $D_1<D_2$ is satisfied.

[Aspect 8]

[0029] The member for a semiconductor manufacturing equipment according to aspect 1 any one of aspect 1 to 7, wherein a fracture toughness (KIC) of a portion of the plug composed of the dense body is larger than a fracture toughness (KIC) of the ceramic substrate.

[Aspect 9]

[0030] A member for a semiconductor manufacturing equipment, comprising:

[0031] a ceramic substrate having an upper surface on which a wafer is to be placed and a lower surface; a plug placement hole that vertically penetrates the ceramic substrate; and a plug embedded in the plug placement hole;

[0032] wherein the plug is composed of a dense body, comprising an upper end portion having an upper end surface exposed on a side of the upper surface, a lower end surface exposed on a side of the lower surface, and a gas passage that penetrates an inside of the dense body and extends from a side surface opening provided on a side surface of the upper end portion to a lower end opening provided on the lower end surface.

[Aspect 10]

[0033] The member for a semiconductor manufacturing equipment according to aspect 9, wherein a concave portion is formed on the upper surface on which a wafer is to be placed, and the upper end portion of the plug protrudes from a bottom of the concave portion such that the side surface opening is exposed.

[Aspect 11]

[0034] The member for a semiconductor manufacturing equipment according to aspect 9 or 10, wherein a height D of the gas passage in the vertical direction is 10 to 300 μm.

[Aspect 12]

[0035] The member for a semiconductor manufacturing equipment according to any one of aspect 9 to 11, wherein a fracture toughness (KIC) of a portion of the plug composed of the dense body is larger than a fracture toughness (KIC) of the ceramic substrate.

[Aspect 13]

[0036] The member for a semiconductor manufacturing equipment according to any one of aspect 9 to 12, wherein the plug comprises a plurality of gas passages, and each of the plurality of gas passages is a gas passage that penetrates the inside of the dense body and extends from the side surface opening provided on the side surface of the upper end portion to the lower end opening provided on the lower end surface.

[0037] A member for a semiconductor manufacturing equipment according to an embodiment of the present invention is effective in suppressing the discharge generated between the wafer and the base plate.

BRIEF DESCRIPTION OF THE DRAWINGS

[0038] FIG. **1-1** is a schematic vertical cross-sectional view of the member for a semiconductor manufacturing equipment according to the first embodiment of the present invention.

[0039] FIG. **1-2** is a schematic vertical cross-sectional view through a center axis of a plug that the member for a semiconductor manufacturing equipment according to the first embodiment of the present invention has (where a single gas passage is provided).

[0040] FIG. **1-3** is a schematic plan view of the plug that the member for a semiconductor manufacturing equipment according to the first embodiment of the present invention has (when four gas passages are provided).

[0041] FIG. **1-4** is a schematic vertical cross-sectional view for explaining the structure of a gas passage near the upper end opening of the plug shown in FIG. **1-2**.

[0042] FIG. **1-5** is a schematic vertical cross-sectional view for explaining the structure of the gas passage near the lower end opening of the plug shown in FIG. **1-2**.

[0043] FIG. **1-6** is a formal plan view of a ceramic substrate that the member for a semiconductor manufacturing equipment according to the first embodiment of the present invention has.

[0044] FIG. **2-1** is a schematic vertical cross-sectional view of the member for a semiconductor manufacturing equipment according to the second embodiment of the present invention.

[0045] FIG. **2-2** is a schematic vertical cross-sectional view through a center axis of a plug that the member for a semiconductor manufacturing equipment according to the second embodiment of the present invention has (where a single gas passage is provided).

[0046] FIG. **3** is a schematic vertical cross-sectional view of the member for a semiconductor manufacturing equipment according to the third embodiment of the present invention.

[0047] FIG. **4**A to **4**C show a manufacturing process diagram of a member for a semiconductor manufacturing equipment according to an embodiment of the present invention.

DETAILED DESCRIPTION OF THE INVENTION

[0048] Hereinafter, embodiments of the present invention will now be described in detail with reference to the drawings. It should be understood that the present invention is not intended to be limited to the following embodiments, and any change, improvement or the like of the design may be appropriately added based on ordinary knowledge of those skilled in the art without departing from the spirit of the present invention. In addition, as used herein, "upper" and "lower" are used to conveniently express the relative positional relationship when a member for a semiconductor manufacturing equipment is placed on a horizontal surface with the upper surface for placing a wafer of the ceramic substrate facing upward, and they do not represent any absolute positional relationships. Therefore, depending on the orientation of the member for a semiconductor manufacturing equipment, "upper" and "lower" may become "lower" and "upper", or "left" and "right", or "front" and "rear".

1. Configuration of a Member for Semiconductor Manufacturing Equipment According to First Embodiment

[0049] Referring to FIG. **1**, a member **10** for a semiconductor manufacturing equipment according to the first embodiment of the present invention comprises a ceramic substrate **20** having an upper surface **21** on which a wafer W is to be placed and a lower surface **23** opposite to the upper surface **21**; a plug placement hole **50** that vertically penetrates the ceramic substrate **20**; and a plug **55** embedded in the plug placement hole **50**. Further, the member **10** for a semiconductor manufacturing equipment comprises a base plate **30** bonded to the lower surface **23** of the ceramic substrate **20** via a bonding layer **40**, and a gas supply path **60** that passes through the base plate **30** and the bonding layer **40** and supplies a gas to the plug **55**.

(**1-1**. Ceramic Substrate)

[0050] The upper surface **21** of the ceramic substrate **20** has a wafer placement surface on which the wafer W is to be placed. In addition, an electrode **22** is provided inside the dielectric substrate **20**. As shown in FIG. **1-1** and FIG. **1-6**, on the upper surface **21** of the ceramic substrate **20**, an annular seal band **21***a* is formed along the outer edge, and a plurality of protrusions **21***b* are formed on the entire surface inside the seal band **21***a*. Although the shape of the protrusion **21***b* is not limited, it can be, for example, a cylinder, a prism, or the like. It is preferable that the seal band **21***a* and

the small protrusions **21***b* have the same height, and the height is, for example, 5 to 100 μm, and typically 10 to 30 μm. The electrode **22** is a planar electrode used as an electrostatic electrode, and is connected to an external DC power source via a power supply member (not shown). A low-pass filter may be placed in the middle of the power supply member. The power supply member is electrically insulated from the bonding layer **40** and the base plate **30**. When a DC voltage is applied to this electrode **22**, the wafer W is adsorbed and fixed to the wafer placement surface (specifically, the upper surface of the seal band **21***a* and the upper surface of the protrusion **21***b*) by electrostatic attraction force, and when the application of the DC voltage is released, the adsorption and fixation of the wafer W to the wafer placement surface is released. In addition, the portion of the upper surface **21** of the ceramic substrate **20** where the seal band **21***a* and the projections **21***b* are not provided is referred to as the reference surface **21***c*.

[0051] As the electrode **22**, a heater electrode (resistance heating element) may be incorporated instead of or in addition to the electrostatic electrode. In that case, a heater power source is connected to the heater electrode. One layer of electrode may be provided inside the ceramic substrate **20**, or two or more layers which are spaced apart from each other r may be provided inside the ceramic substrate **20**.

[0052] The ceramic substrate **20** can be, for example, a circular plate (for example, 300 to 400 mm in diameter) made of ceramics such as alumina sintered body or aluminum nitride sintered body. Although the thickness of the ceramic substrate **20** is not limited, from the viewpoint of increasing the fixing strength of the plug **55**, it is preferable that the thickness from an upper opening **50***a* to a lower opening **50***b* is 1 mm or more. Further, from the viewpoint of reducing heat transfer of the ceramic substrate **20** and reducing manufacturing costs, the thickness is preferably 5 mm or less, more preferably 3 mm or less, and even more preferably 2 mm or less. Therefore, the thickness from the upper opening **50***a* to the lower opening **50***b* is preferably 1 to 5 mm, more preferably 1 to 3 mm, and even more preferably 1 to 2 mm. Here, the thickness from the upper opening **50***a* to the lower opening **50***b* means the distance from the center of gravity of the upper opening **50***a* to the center of gravity of the lower opening **50***b*. The height of the upper opening **50***a* is equal to the height of the reference surface **21***c* of the upper surface **21** of the ceramic substrate **20**. The height of the lower opening **50***b* is equal to the height of the lower surface **23** of the ceramic substrate **20**.

(**1-2**. Plug Arrangement Hole)

[0053] The plug-placed hole **50** is a hole which penetrates the ceramic substrate **20** in the vertical direction from the upper opening **50***a* to the lower opening **50***b* as shown in FIG. **1-1**. The plug placement hole **50** functions as a gas passage from the lower surface **23** of the ceramic substrate **20** to the reference surface **21***c* of the upper surface **21**. A single plug placement hole **50** may be provided, but it is preferable to provide a plurality of it. In FIG. **1-6**, it is shown that a plurality of plug placement holes **50** are provided (six herein), in each of which a plug **55** is embedded.

[0054] The opening diameter (if the cross section of the plug placement hole is not circular, it means the equivalent circle diameter) of the plug placement hole **50** in the horizontal direction is not limited, but may be within the range of 1 to 5 mm, typically within the range of 3 to 4 mm, at any height position. The diameter of the plug placement hole **50** may be constant or may vary from the lower surface **23** to the upper surface **21** of the ceramic substrate **20**. In one embodiment, the diameter of the plug placement hole **50** may decrease from top to bottom, and it may have a tapered inner peripheral surface **50***c* in which the area of the upper opening **50***a* is larger than the area of the lower opening **50***b*. Since the plug placement hole **50** has such a tapered inner peripheral surface **50***c*, when embedding the plug **55** into the plug placement hole **50**, the plug **55** can easily stop at a predetermined height position of the plug placement hole **50**. Therefore, it is possible obtain an effect that the plug **55** can be embedded in the plug placement hole **50** with high positioning accuracy. Further, while the plug **55** becomes difficult to come out downward, it becomes relatively easy to come out upward, so that the effect of making it easier to replace the plug **55** can be obtained. Furthermore, since the creepage distance becomes longer, an effect of suppressing discharge can also be obtained. The plug placement hole **50** can have, for example, a truncated conical or truncated pyramid space.

[0055] The inclination angle α of the inner peripheral surface **50***c* of the plug placement hole **50** with respect to the lower opening **50***b* is preferably 70° or more, and preferably 75° or more, from the viewpoint of increasing the fixing strength of the plug **55**, and from the viewpoint of suppressing the volume of the plug **55** from becoming excessively large and securing space for arranging the electrode around it. In addition, it is preferable that the inclination angle α be 87° or less, and more preferable that it is 85° or less, from the viewpoint of improving the positioning accuracy in the height direction of the plug when press-fitting the plug **55** downward into the plug placement hole **50**, from the viewpoint of making it easy to replace the plug **55**, and from the viewpoint of increasing the creepage distance to prevent discharge. Therefore, the inclination angle α is preferably, for example, 70° to 87°, and more preferably 75° to 85°.

(**1-3**. Plug)

[0056] The plug **55** is embedded in the plug placement hole **50**. FIG. **1-2** shows a schematic vertical cross-sectional view that passes through the center axis of the plug **55** (when one gas passage is provided). FIG. **1-3** shows a schematic plan view of the plug **55** (when four gas passages are provided). The plug **55** is composed of a dense body **55***c* and comprises an upper end surface **55***a* exposed on the side of the upper surface **21** of the ceramic substrate **20**, a lower end surface **55***b* exposed on the side of the lower surface **23** of the ceramic substrate **20**, and a gas passage **55***d* that penetrates the inside of the dense body **55***c* and extends from an upper end opening **55***a***1** provided on the upper end surface **55***a* to a lower end opening **55***b***1** of the lower end surface **55***b*.

[0057] As used herein, the dense body **55***c* refers to the portion constituting the plug **55** and having a porosity of 5% or less. The partial porosity of the plug **55** is measured by the following method. First, the ceramic plug **55** is cut such that a cross section passing through the center axis extending in the vertical direction of plug **55** is exposed. Next, in a cross section, the portion for which the porosity is to be measured is observed using a scanning electron microscope (SEM) at a magnification of 3000 times in approximately 2200 μm^2, and the area ratio of pores confirmed in the portion is calculated. Specifically, by analyzing the SEM image, a

threshold value is determined from the luminance distribution of luminance data of pixels in the image using a discriminant analysis method (Otsu's binarization). Thereafter, each pixel in the image is binarized into solid portions and pore portions based on the determined threshold value, and the area of the solid portions and the area of the pore portions are calculated. Then, the ratio of the area of the pore portions to the total area (total area of the solid portions and the pore portions) is determined, and this is taken as the porosity of the portion to be measured.

[0058] In the first embodiment, the gas flowing from the lower end opening **55***b***1** provided on the lower end surface **55***b* of the plug **55** may flow through the gas passage **55***d* provided inside the dense body **55***c* and may flow out from an upper end opening **55***a***1** provided on the upper end surface **55***a* of the plug **55**. In one plug **55**, only one gas passage **55***d* may be provided, or two or more gas passages **55***d* may be provided. From the viewpoint of ensuring a gas flow rate, one plug **55** is preferably provided with 1 to 10 gas passages **55***d*, and more preferably 4 to 10 gas passages **55***d*. For simplicity, one gas passage **55***d* is shown in FIG. **1-2**. FIG. **1-3** shows the upper end openings **55***a***1** that serve as the outlets of four gas passages **55***d*. The gas passage **55***d* may be constructed of a straight line, a curved line, or a combination of both, but from the viewpoint of suppressing discharge, it is preferable to have a shape such that the length of the passage is longer than the length of the plug **55** in the vertical direction, for example, a curved shape such as a spiral shape or a zigzag shape.

[0059] There is no particular restriction on the opening shape of the upper end opening **55***a***1**. For example, the opening shape can be formed by a straight line, a curved line, or a combination of both. Specifically, the opening shape can be rectangular. Among these, in order to secure the opening area and the area of the plug, the opening shape is preferably an elongated rectangular shape.

[0060] The gas passage **55***d* may be hollow, but at least a portion thereof may be porous as long as gas flow is allowed. When at least a portion of the gas passage **55***d* is porous, the gas flowing from the lower end opening **55***b***1** of the plug **55** flows through the gas passage **55***d* formed by a large number of continuous pores, and flows out from the upper end opening **55***a***1** of the plug **55**. The gas that has flowed out is supplied between the wafer W and the ceramic substrate **20**. Since the three-dimensional (for example, three-dimensional network) continuous pores that exist within the porous material serve as gas passages, the substantial passage length within the gas passage **55***d* becomes longer, and an effect that electric discharge is less likely to occur can be obtained, compared to the case where the gas passage **55***d* is hollow. It is also possible to further form one or more gas passages within the porous gas channel.

[0061] Therefore, the gas passage **55***d* may be hollow or porous. It is preferable that at least a portion of the gas passage **55***d* is porous. The fact that the gas passage **55***d* is hollow means that the porosity is 100%. The fact that the gas passage **55***d* is porous means that the porosity of the gas passage **55***d* is greater than 5% and less than 100%. When the gas passage **55***d* is porous, the porosity of the gas passage **55***d* is preferably large in order to reduce ventilation resistance. Therefore, the porosity of the gas passage **55***d* is preferably 10% or more, and more preferably 40% or more. On the other hand, the porosity of the gas passage **55***d* is preferably 50% or less in order to lengthen the passage length of the plug **55** and ensure structural strength. Therefore, the porosity of the gas passage **55***d* is, for example, preferably 10% or more and 50% or less, and more preferably 40% or more and 50% or less. The porosity of the gas passage **55***d* is measured, for example, by mercury porosimetry method (JIS R1655: 2003).

[0062] FIG. **1-4** schematically illustrates the structure of the gas passage **55***d* near the upper end opening **55***a***1** of the plug **55**. Further, FIG. **1-5** schematically illustrates the structure of the gas passage **55***d* near the lower end opening **55***b***1** of the plug **55**. During wafer processing, gas molecules present between the wafer W and the ceramic substrate **20** are ionized, and in some cases the electrons generated thereby accelerate toward the ceramic substrate **20** and collide with the upper surface **21** of the ceramic substrate **20**. Since the higher the gas velocity is, the more likely discharge is to occur, it is effective to shorten the distance between the wafer W and the ceramic substrate **20** in order to suppress the gas velocity.

[0063] However, when the upper end opening **55***a***1** of the plug **55** is exposed on the upper surface **21** of the ceramic substrate **20**, the electrons flowing from the upper end opening **55***a***1** are further accelerated before colliding with the surface **55***d***1** of the gas passage **55***d*. Therefore, the shorter the distance from the upper end opening **55***a***1** to the surface **55***d***1** of the gas passage **55***d* is, the more the acceleration time until the electrons flowing into the upper end opening **55***a***1** collide with the surface of the gas passage **55***d* can be suppressed, which is desirable. On the other hand, from the viewpoint of securing the necessary gas flow rate when supplying gas between the wafer W and the ceramic substrate **20**, it is advantageous that the distance from the lower end opening **55***b***1** of the gas passage **55***d* to the surface **55***d***1** of the gas passage **55***d* is longer.

[0064] Therefore, in one embodiment, for at least one gas passage **55***d* provided on the plug **55**, a maximum height D_1 in the vertical direction from the upper end opening **55***a***1** to the surface **55***d***1** of the gas passage **55***d*, and a maximum height D_2 in the vertical direction from the lower end opening **55***b***1** to the surface of the gas passage **55***d* satisfies a relationship: $D_1<D_2$. In cases where the plug **55** comprise a plurality of gas passages **55***d*, it is preferable that the relationship $D_1<D_2$ is satisfied for all of the plurality of gas passages **55***d*.

[0065] Regarding the preferred embodiment of the plug **55**, such as the maximum height D_1, the maximum height D_2 of the gas passage **55***d*, and the gas passage height D as described below, In cases where the plug **55** comprise a plurality of gas passages **55***d*, it is preferable that all of the plurality of gas passages **55***d* satisfy the conditions related to those preferred embodiments.

[0066] For at least one gas passage **55***d* provided on the plug **55**, it is preferable that the relationship $D_1/D_{2\leq 0.9}$ is satisfied, more preferably the relationship $D_1/D_{2\leq 0.7}$ is satisfied, and even more preferably the relationship $D_1/D_{2\leq 0.5}$ is satisfied. On the other hand, from the viewpoint of securing the necessary gas flow rate when supplying gas between the wafer W and the ceramic substrate **20**, It is preferable not to make D_1/D_2 excessively small. Accordingly, it is preferable that the relationship $0.1\leq D_1/D_2$ is satisfied, more preferably the relationship $0.3\leq D_1/D_2$ is satisfied, and even more preferably the relationship $0.5\leq D_1/D_2$ is satisfied. Therefore, for example, it is preferable to satisfy the relationship $0.1\leq D_1/D_{2\leq 0.9}$. Furthermore, the rela-

tionship $0.5 \leq D_1/D_{2 \leq 0.7}$ may be satisfied, or the relationship $0.3 \leq D_1/D_{2 \leq 0.5}$ may be satisfied.

[0067] It is preferable that the height D of the gas passage **55***d* in the vertical direction increases continuously or stepwise as the gas passage **55***d* proceeds downward.

[0068] The maximum height D_1 in the vertical direction from the upper end opening **55***a***1** to the surface **55***d***1** of the gas passage **55***d* means, as shown in FIG. **1-4**, the length of the longest straight line until it comes into contact with the surface **55***d***1** of the gas passage **55***d*, among the straight lines that can extend downward from the upper end opening **55***a***1** toward the surface **55***d***1** of the gas passage **55***d*. Similarly, the maximum height D_2 in the vertical direction from the lower end opening **55***b***1** to the surface **55***d***1** of the gas passage **55***d* means, as shown in FIG. **1-5**, the length of the longest straight line until it comes into contact with the surface **55***d***1** of the gas passage **55***d*, among the straight lines that can extend upward from the lower end opening **55***b***1** toward the surface **55***d***1** of the gas passage **55***d*.

[0069] The smaller the maximum height D_1 is, the more effective it is to suppress discharge. Also, if the maximum height D_1 is set with a margin on the safe side, the risk of discharge can be suppressed even when the distance in the height direction from the back surface of the wafer W to the surface **55***d***1** of the gas passage **55***d* exposed to the upper end opening **55***a***1** becomes longer due to some reason. Examples of "some reason" may be as follow: (a) chipping occurs near the upper end opening **55***a***1** of the plug **55** and the gas passage **55***d* is chipped; (b) when the plug **55** is embedded in the plug placement hole **50**, the plug **55** sinks below a predetermined position; (c) the machining accuracy of the plug **55** itself is low; or the like. On the other hand, from the viewpoint of ensuring the necessary gas flow rate when supplying gas between the wafer W and the ceramic substrate **20**, it is desirable that the maximum height D_1 is large. Therefore, considering the balance between the two, the maximum height D_1 is preferably 10 to 300 μm, more preferably 40 to 100 μm, and even more preferably 60 to 100 μm.

[0070] The maximum height D_2 is desirably large from the viewpoint of securing the gas flow rate necessary when supplying gas between the wafer W and the ceramic substrate **20**. On the other hand, from the viewpoint of ensuring the passage length and the plug strength, it is preferable not to make it excessively large. Therefore, considering the balance between these two factors, the maximum height D_2 is preferably 50 to 500 μm, more preferably 50 to 300 μm, and even more preferably 100 to 200 μm.

[0071] From the viewpoint of securing the necessary gas flow rate when supplying gas between the wafer W and the ceramic substrate **20**, it is preferable that the height D of the gas passage **55***d* in the vertical direction is large, except for the vicinity of the upper end surface **55***a* of the plug **55**, where the height D of the gas passage **55***d* in the vertical direction needs to be set small in order to suppress the risk of electrical discharge. Therefore, when taking a coordinate axis in the vertical direction (see FIG. **1-2**), and assuming the coordinate value of the upper end surface **55***a* of the plug **55** is 0, and the coordinate value of the lower end surface **55***b* is H, the height D of the gas passage **55***d* in the vertical direction preferably satisfies a relationship $D \geq 1.5\ D_1$, more preferably satisfies a relationship $D \geq 2D_1$, at least within the range of coordinate value from 0.5×H to 1.0×H, and more preferably the range of coordinate value from 0.1×H to 1.0×H. However, from the viewpoint of reducing the risk of discharge by ensuring the passage length and from the viewpoint of ensuring plug strength, it is preferable not to make the height D of the gas passage **55***d* in the vertical direction excessively large. Specifically, the height D of the gas passage **55***d* in the vertical direction preferably satisfies a relationship $30\ D_1$, more preferably satisfies a relationship $20\ D_1 \geq D$, and even more preferably satisfies a relationship $10\ D_1 \geq D$, at least within the range of coordinate value from 0.5×H to 1.0×H, and more preferably the range of coordinate value from 0.1×H to 1.0×H. Therefore, for example, the height D of the gas passage **55***d* in the vertical direction preferably satisfies a relationship $30\ D_1 \geq D \geq 1.5\ D_1$, more preferably satisfies a relationship $20\ D_1 \geq D \geq 2D_1$, and even more preferably satisfies a relationship $10\ D_1 \geq D \geq 2D_1$, at least within the range of coordinate value from 0.5×H to 1.0×H, and more preferably the range of coordinate value from 0.1×H to 1.0×H.

[0072] In order to suppress the risk of electrical discharge, in addition to the maximum height D_1 in the vertical direction from the upper end opening **55***a***1** of the plug **55** to the surface **55***d***1** of the gas passage **55***d*, in the vicinity of the upper end surface **55***a* of the plug **55**, it is preferable to set the height D of the gas passage **55***d* in the vertical direction small on the condition that it does not become less than the maximum height D_1. Specifically, the height D of the gas passage **55***d* in the vertical direction preferably satisfies a relationship $D_1 \leq D < 1.5\ D_1$ at least within the range of coordinate value from 0 to less than 0.1×H.

[0073] The height D of the gas passage **55***d* in the vertical direction at a specific coordinate value is the length of the longest straight line among straight lines extending in the vertical direction connecting the opposing surfaces **55***d***1** of the gas passage **55***d* and that can intersect or touch the horizontal plane passing the specific coordinate value. In order to explain this, the height D of the gas passage **55***d* at a coordinate value of 0.95H is schematically shown in FIG. **1-5**. As can be understood from FIG. **1-5**, there are many straight lines that extend in the vertical direction connecting the opposing surfaces **55***d***1** of the gas passage **55***d* and that can intersect or touch a horizontal plane (horizontal line in the figure) passing the coordinate value 0.95H. Here, for simplicity, five straight lines are drawn that satisfy the conditions. The lengths of the five straight lines are D_a, D_b, D_c, D_d, and D_e, respectively. Among these, the length of the longest straight line is D_e. Therefore, the height D of the gas passage **55***d* at the coordinate value 0.95H is D_e. The height D of the gas passage **55***d* in the vertical direction can be measured, for example, by obtaining three-dimensional shape information of the gas passage **55***d* using X-ray CT. In addition, regardless of the above definition, the height D of the gas passage **55***d* at the coordinate value 0 is set to D_1, and the height D of the gas passage **55***d* at the coordinate value H is set to D_2.

[0074] In order to suppress occurrence of chipping near the upper end opening **55***a***1** of the plug **55**, it is desirable that the plug **55** has a large fracture toughness value (KIC). Specifically, it is preferable that the fracture toughness value (KIC) of the portion of the plug **55** composed of the dense body **55***c* is larger than the fracture toughness value (KIC) of the ceramic substrate **20**. Since the processing conditions for components for semiconductor manufacturing equipment are often set based on the ceramic substrate **20**, when the fracture toughness value (KIC) of the portion of the plug

55 composed of the dense body **55***c* is larger than the fracture toughness value (KIC) of the ceramic substrate **20**, the risk of chipping occurring in the plug **55** is reduced.

[0075] The fracture toughness value (KIC) of the portion of the plug **55** composed of the dense body **55***c* is preferably 2 $MPa \cdot m^{1/2}$ or more, more preferably 3 $MPa \cdot m^{1/2}$ or more, and even more preferably 4 $MPa \cdot m^{1/2}$ or more. Although no particular upper limit is set for the fracture toughness value (KIC) of the portion of the plug **55** composed of the dense body **55***c*, from the viewpoint of ease of manufacture, it is preferably 13 $MPa \cdot m^{1/2}$ or less, more preferably 12 $MPa \cdot m^{1/2}$ or less, and even more preferably 11 $MPa \cdot m^{1/2}$ or less. Therefore, the fracture toughness value (KIC) of the portion of the plug **55** composed of the dense body **55***c* is preferably 2 to 13 $MPa \cdot m^{1/2}$, more preferably 3 to 12 $MPa \cdot m^{1/2}$, and even more preferably 4 to 11 $MPa \cdot m^{1/2}$.

[0076] The fracture toughness value (KIC) of the portion of the plug **55** composed of the dense body **55***c* and the ceramic substrate **20** is measured in accordance with the Single Edge Precracked Beam method (SEPB method) specified in JIS R1607: 2015.

[0077] As the material constituting the plug **55**, electrically insulating ceramics can be used, and for example, it may contain one or more selected from aluminum oxide, aluminum nitride, and silicon dioxide. It can also be composed of only one or two selected from aluminum oxide, aluminum nitride, and silicon dioxide, excluding impurities. Quartz is preferable as silicon dioxide. In particular, in order to control the fracture toughness value (KIC) of the portion of the plug **55** composed of the dense body **55***c* within the above range, it is preferable that the portion of the plug **55** composed of the dense body **55***c* be made of a ceramic material such as alumina (aluminum oxide) having high fracture toughness.

[0078] Further, in order to maintain the fixing strength of the plug **55** embedded in the plug placement hole **50**, it is preferable that the difference in thermal expansion coefficient between the plug **55** and the ceramic substrate **20** is small. Therefore, the material constituting the plug **55** and the material constituting the ceramic substrate **20** preferably both contain at least one selected from aluminum oxide and aluminum nitride, and it is more preferable that the material compositions are the same.

[0079] The height position of the upper end surface **55***a* of the plug **55** is not limited. Therefore, the height position of the upper end surface **55***a* of the plug **55** may be the same height as the reference surface **21***c* of the ceramic substrate **20**, or may be at a different height. When making the upper end surface **55***a* of the plug **55** lower than the reference surface **21***c*, in order to suppress the occurrence of discharge, it is preferable to arrange it at a lower position within the range of 0.5 mm or less (preferably 0.2 mm or less, and more preferably 0.1 mm or less). When the upper end surface **55***a* of the plug **55** is made higher than the reference surface **21***c*, there is no particular restriction as long as the upper end surface **55***a* of the plug **55** is made lower than the upper surface of the protrusion **21***b* and the outflow of gas from the plug **55** is not inhibited.

[0080] There is no particular restriction on the height position of the lower end surface **55***b* of the plug **55**. Therefore, the height position of the lower end surface **55***b* of the plug **55** may be the same height as the lower surface **23** of the ceramic substrate **20**, or may be at a different height. For example, the lower end surface **55***b* of the plug **55** may protrude below the lower surface **23** of the ceramic substrate **20**, or the lower end surface **55***b* of the plug **55** may be provided above the lower surface **23** of the ceramic substrate **20**.

[0081] The outer peripheral surface **55***e* of the plug **55** and the inner peripheral surface **50***c* of the plug placement hole **50** may be bonded together with an adhesive, but it is preferable that they fit directly together without using an adhesive. If the two are directly fitted, no gap will be created between the plug **55** and the plug placement hole **50** caused by deterioration due to corrosion or erosion of the adhesive. Therefore, there is an advantage that discharge and falling off of the plug **55** due to deterioration of the adhesive can be suppressed.

[0082] Furthermore, as shown in FIG. **1-1**, when observing a vertical cross section obtained by cutting the ceramic substrate **20** in the thickness direction, from the viewpoint of improving the fixing strength of the plug **55**, it is preferable that the inner peripheral surface **50***c* of the plug placement hole **50** be in contact with the outer peripheral surface **55***e* of the plug **55** in a parallel positional relationship. In other words, the outer peripheral surface **55***e* of the plug **55** has the same inclination angle as the inner peripheral surface **50***c* of the plug placement hole **50**. Therefore, in a preferred embodiment, the plug **55** has the same outer shape as the plug placement hole **50** (for example, a truncated cone shape or a truncated pyramid shape). Thereby, the area where the inner peripheral surface **50***c* of the plug **55** contacts the outer peripheral surface **55***e* of the plug **55** can be increased, and high fixing strength can be obtained.

[0083] An example of a direct fitting method is a method of embedding the plug **55** by press-fitting it into the plug placement hole **50**. In this case, in order to obtain the desired fixation strength, it is preferable that the cross-sectional diameter in the horizontal direction at any height position of the plug **55** before press-fitting is made slightly larger (for example, by about 5 to 20 μm in equivalent circle diameter) than the horizontal cross-sectional diameter of the plug placement hole **50** located at the same height position. Further, as a direct fitting method, there is also a method in which a male threaded portion provided on the outer peripheral surface **55***a* of the plug **55** is screwed into a female threaded portion provided on the inner peripheral surface **50***c* of the plug placement hole **50**.

[0084] As a method for manufacturing the plug **55** having such a dense body **55***c* and a gas passage **55***d* penetrating the inside thereof, mention may be made to a method of firing a molded body formed using an additive manufacturing technology such as a 3D printer, for example. Further, the plug **55** may be formed by mold casting. Details of mold casting are disclosed in, for example, Japanese Patent No. 5458050. In mold casting, a ceramic slurry containing ceramic powder, a solvent, a dispersant, and a gelling agent is injected into a molding space of a mold, and a molded body is formed in the mold by causing a chemical reaction with the gelling agent to gel the ceramic slurry. In the mold casting, a molded body may also be formed in a forming mold using an outer mold and a core (a mold having the same shape as the gas passage **55***d*) made of a material with a low melting point such as wax, and thereafter, a molded article may be produced by heating the forming mold to a temperature equal to or higher than the melting point of the mold to melt and remove the forming mold or to eliminate it by combustion. Next, a porous raw material is placed in

the cavity corresponding to the gas passage **55***d* in the obtained molded body. Specifically, for example, a raw material, in which pore-forming materials such as resin and wax have been added to aggregates such as ceramic powder, is filled into a cavity corresponding to the gas passage **55***d* of a molded body. A solvent can be added as necessary to make it into a slurry or paste. Finally, the entire material is fired. By this firing, the pore-forming material in the porous raw material disappears so that a porous portion is formed, and a plug **55** in which a dense body and the porous portion are integrated is obtained.

[0085] The porosity of the plugs **55** can be controlled, for example, by adjusting the content of the pore-forming material in the raw material composition before producing by firing the ceramics which they are made of. For example, in order to make the plug **55** denser, the amount of pore-forming material may be reduced or it may not be used.

(**1-4**. Base Plate)

[0086] The base plate **30** may be a circular plate (having a diameter equal to or larger than that of the ceramic substrate **20**) with good electrical conductivity and thermal conductivity, for example. Referring to FIG. **1-1**, inside the base plate **30**, a refrigerant passage **32** through which refrigerant circulates may be formed. The refrigerant flowing through the refrigerant passage **32** is preferably liquid and preferably electrically insulating. Examples of the electrically insulating liquid include fluorine-based inert liquids. The refrigerant passage **32** can be formed, for example, in a single stroke across the entire base plate **30** from one end (inlet) to the other end (outlet) in a plan view. A supply port and a recovery port of an external refrigerant device (not shown) are connected to the one end and the other end of the refrigerant passage **32**, respectively. The refrigerant supplied from the supply port of the external refrigerant device to the one end of the refrigerant passage **32** passes through the refrigerant passage **32** and then returns from the other end of the refrigerant passage **32** to a recovery port of the external refrigerant device, and after the temperature has been adjusted, the refrigerant is again supplied to the one end of the refrigerant passage **32** from the supply port. The base plate **30** is connected to a radio frequency (RF) power source and can also be used as an RF electrode.

[0087] Examples of the material constituting the base plate **30** include metal materials and composite materials of metal and ceramics. Examples of the metal material include Al, Ti, Mo, W, and alloys thereof. Examples of composite materials of metal and ceramics include metal matrix composites (MMC) and ceramic matrix composites (CMC). Specific examples of such composite materials include materials containing Si, SiC, and Ti (also referred to as SiSiCTi), materials in which porous SiC is impregnated with Al and/or Si, and composite materials of Al_2O_3 and TiC. A material in which a porous SiC body is impregnated with Al is called AlSiC, and a material in which a porous SiC body is impregnated with Si is called SiSiC. It is preferable to select a material for the base plate **30** that has a coefficient of thermal expansion close to that of the material for the ceramic substrate **20**. For example, when the ceramic substrate **20** is made of alumina, the base plate is preferably made of SiSiCTi or AlSiC.

(**1-5**. Bonding Layer)

[0088] As shown in FIG. **1-1**, the upper surface **31** of the base plate **30** is bonded to the lower surface **23** of the ceramic substrate **20** via a bonding layer **40**. The bonding layer **40** is formed by, for example, TCB (thermal compression bonding). TCB is a known method in which a metal bonding material is sandwiched between two members to be bonded, and the two members are pressure bonded while being heated to a temperature below the solidus temperature of the metal bonding material. The bonding layer **40** can be composed of a metal bonding layer using, for example, an Al—Mg-based bonding material or an Al—Si—Mg-based bonding material. The bonding layer **40** may be a layer formed of solder or a metal brazing material. Furthermore, the bonding layer **40** may be composed of a resin adhesive layer instead of the metal bonding layer. Examples of the material for the resin adhesive layer include silicone resin-based adhesives, epoxy resin-based adhesives, and acrylic resin-based adhesives. In order to improve the uniformity of the thickness of the resin adhesive layer, a spacer (not shown) may be placed between the upper surface **31** of the base plate **30** and the lower surface **23** of the ceramic substrate **20**.

[0089] The bonding layer **40** has a through hole **42**. The through hole **42** is provided at a position facing a large diameter portion **34***a* of a gas hole **34**. The through hole **42** may be provided coaxially with the large diameter portion **34***a*, and the diameter of the through hole **42** may be made to match the diameter of the large diameter portion **34***a*. As used herein, "match" includes not only a complete match but also a substantially match (for example, within a tolerance range) (the same applies hereinafter). A plurality of through-holes **42** may be provided for one plug **55**, and in this case, it is preferable that a plurality of through-holes **42** be provided point-symmetrically with respect to the central axis of the plug **55** extending in the vertical direction. The size of each through hole **42** can be made smaller by providing a plurality of through holes **42** rather than using one large through hole **42**. Thereby, the risk of electric discharge can be reduced. Further, by providing a plurality of through holes **42**, a necessary gas flow rate can be ensured.

(**1-6**. Gas Supply Path)

[0090] Referring to FIG. **1-1**, the gas supply path **60** for supplying gas to the plug **55** through the base plate **30** and the bonding layer **40** has, for example, a through hole **42** that vertically penetrates the bonding layer **40** and a gas hole **34** that communicates with the through hole **42** and penetrates the base plate **30** from the upper surface **31** to the lower surface **33**. The upper surface **31** of the base plate **30** may further comprise a large diameter portion **34***a* provided at a position facing the through hole **42**. By having the through hole **42** and furthermore the large diameter portion **34***a*, when placing the plug **55** in the plug placement hole **50**, even if there is a manufacturing error in the plug placement hole **50** and/or the plug **55**, such a manufacturing error can be absorbed because a space is created that allows the plug **55** to enter.

[0091] There are no particular restrictions on the configuration of the gas supply path **60**. For example, like a member **10** for a semiconductor manufacturing equipment according to another embodiment of the present invention shown in FIG. **3**, the base plate **30** may be provided with one or more ring portions **64***a* having a passage extending concentrically with the base plate **30** in a plan view, one or more gas introduction portions **64***b* that supply the gas introduced from the lower surface **33** of the base plate **30** to the ring

portions **64***a*, and a distribution portion **64***c* that distributes gas from the ring portions **64***a* to each plug **55**. In the present embodiment, the upper end of the distribution portion **64***c* communicates with the through hole **42** of the bonding layer **40**. In FIG. **3**, the same components as those in the embodiment shown in FIG. **1-1** are given the same reference numerals. The number of gas introduction portions **64***b* may be smaller than the number of distribution portions **64***c*, and may be one, for example. In this way, the number of gas pipes connected to the base plate **30** can be made smaller than the number of plugs **55**. Other auxiliary passages not shown may also be provided.

(**1-7**. Others)

[0092] A lift pin hole may be provided that penetrates the member **10** for semiconductor manufacturing equipment. The lift pin hole is a hole through which a lift pin for moving the wafer W up and down with respect to the upper surface **21** of the ceramic substrate **20** is inserted. Lift pin holes are provided at three locations when the wafer W is supported by, for example, three lift pins.

2. Configuration of a Member for Semiconductor Manufacturing Equipment According to Second Embodiment

[0093] Referring to FIG. **2-1**, a member **10** for a semiconductor manufacturing equipment according to the second embodiment of the present invention comprises a ceramic substrate **20** having an upper surface **21** on which a wafer W is to be placed and a lower surface **23** opposite to the upper surface **21**; a plug placement hole **50** that vertically penetrates the ceramic substrate **20**; and a plug **55** embedded in the plug placement hole **50**. Further, the member **10** for a semiconductor manufacturing equipment comprises a base plate **30** bonded to the lower surface **23** of the ceramic substrate **20** via a bonding layer **40**, and a gas supply path **60** that passes through the base plate **30** and the bonding layer **40** and supplies a gas to the plug **55**.

[0094] A schematic vertical cross-sectional view of the plug **55** is shown in FIG. **2-2**. The plug **55** is composed of a dense body **55***c* and comprises an upper end portion **55***f* having an upper end surface **55***a* exposed on the side of the upper surface **21** of the ceramic substrate **20**, a lower end surface **55***b* exposed on the side of the lower surface **23** of the ceramic substrate **20**, and a gas passage **55***d* that penetrates the inside of the dense body **55***c* and extends from the side surface opening **55***f***2** provided on the side surface **55***f***1** of the upper end portion **55***f* to the lower end opening **55***b***1** of the lower end surface **55***b*. Therefore, the plug **55** does not have an opening for the gas passage **55***d* on the upper end surface **55***a*. Thereby, there is no risk that accelerated electrons will flow into the upper end surface **55***a* and collide with the gas passage **55***d* during wafer processing, so that the risk of electric discharge can be suppressed.

[0095] As mentioned above, as used herein, the dense body **55***c* refers to a portion of the plug **55** that has a porosity of 5% or less. The partial porosity of the plug **55** is measured by the method described above.

[0096] In the second embodiment, the gas flowing from the lower end opening **55***b***1** provided on the lower end surface **55***b* of the plug **55** may flow through the gas passage **55***d* provided inside the dense body **55***c*, and may flow out from the side surface opening **55***f***2** provided on the side surface **55***f***1** of the upper end portion **55***f* of the plug **55**. In one plug **55**, only one gas passage **55***d* may be provided, or two or more gas passages **55***d* may be provided. The gas passage **55***d* may be constructed of a straight line, a curved line, or a combination of both, but from the viewpoint of suppressing discharge, it is preferable to have a shape in which the length of the passage is longer than the length of the plug **55** in the vertical direction, for example, a curved shape such as a spiral shape or a zigzag shape.

[0097] When the plug **55** has a plurality of gas passages **55***d*, it is preferable that each of the plurality of gas passages **55***d* extend from the side surface opening **55***f***2** provided on the side surface **55***f***1** of the upper end portion **55***f*, through the inside of the dense body **55***c*, to the lower end opening **55***b***1** provided on the lower end surface **55***b*.

[0098] When taking the coordinate axis in the vertical direction (see FIG. **2-2**), and assuming the coordinate value at the upper end surface **55***a* of the plug **55** is 0, and the coordinate value at the lower end surface **55***b* is H, the upper end portion **55***f* of the plug **55** refers to a range of coordinate value from 0 to 0.1×H. In order to ensure the passage length and to suppress the height from the wafer placement surface to the side surface opening **55***f***2** and suppress electric discharge, the side surface opening **55***f***2** at the upper end portion **55***f* of the plug **55** is preferably provided within a range of coordinate value from 0.01×H to 0.06×H, more preferably provided within a range of coordinate value from 0.01×H to 0.05×H, and even more preferably provided within a range of coordinate value of 0.01×H to 0.04×H.

[0099] The gas passage **55***d* may be hollow, but at least a portion thereof may be porous as long as gas flow is allowed. When at least a portion of the gas passage **55***d* is porous, the gas flowing in from the lower end opening **55***b***1** of the plug **55** flows through the gas passage **55***d* formed by a large number of continuous pores, and flows out from the side surface opening **55***f***2** at the upper end portion **55***f* of the plug **55**. The gas that has flowed out is supplied between the wafer W and the ceramic substrate **20**. Since the three-dimensional (for example, three-dimensional network) continuous pores that exist within the porous material serve as gas passages, the substantial passage length within the gas passage **55***d* becomes longer, and an effect that electric discharge is less likely to occur can be obtained, compared to the case where the gas passage **55***d* is hollow. It is also possible to further form one or more gas passages within the porous gas channel.

[0100] Therefore, the gas passage **55***d* may be hollow or porous. It is preferable that at least a portion of the gas passage **55***d* is porous. The fact that the gas passage **55***d* is hollow means that the porosity is 100%. The fact that the gas passage **55***d* is porous means that the porosity of the gas passage **55***d* is greater than 5% and less than 100%. When the gas passage **55***d* is porous, the porosity of the gas passage **55***d* is preferably large in order to reduce ventilation resistance. Therefore, the porosity of the gas passage **55***d* is preferably 10% or more, and more preferably 40% or more. On the other hand, the porosity of the gas passage **55***d* is preferably 50% or less in order to lengthen the passage length of the plug **55** and ensure structural strength. Therefore, the porosity of the gas passage **55***d* is, for example, preferably 10% or more and 50% or less, and more preferably 40% or more and 50% or less. The porosity of the gas passage **55***d* is measured, for example, by mercury porosimetry method (JIS R1655: 2003).

[0101] In the second embodiment, the gas flows out from the side surface opening **55*f*2** provided on the side surface **55*f*1** of the upper end portion **55*f*** of the plug **55**. Therefore, it is necessary to ensure a gas passage such that the gas flowing out from the side surface opening **55*f*2** is supplied between the wafer W and the ceramic substrate **20**. Therefore, in one embodiment, a recess **21*d*** is formed in the upper surface **21** of the ceramic substrate **20** on which a wafer W is to be placed, and the upper end portion **55*f*** of the plug **55** protrudes from the bottom surface of the recess **21*d*** such that the side surface opening **55*f*2** is exposed (see the plug **55** on the left side of FIG. **2-1**). The recess **21*d*** can be formed below the reference surface **21*c***. In this case, even if accelerated electrons collide with the recess **21*d***, the risk of electrical discharge is low because the ceramic is an insulator and does not have a conductive path. In another embodiment, the upper end portion **55*f*** of the plug **55** protrudes from the reference surface **21*c*** of the ceramic substrate **20** such that the side surface opening **55*f*2** is exposed (see the plug **55** on the right side of FIG. **2-1**).

[0102] The height position of the upper end surface **55*a*** of the plug **55** is not limited. Therefore, the height position of the upper end surface **55*a*** of the plug **55** may be the same height as the reference surface **21*c*** of the ceramic substrate **20**, or may be at a different height. When making the upper end surface **55*a*** of the plug **55** lower than the reference surface **21*c***, in order to suppress the occurrence of discharge, it is preferable to arrange it at a lower position within the range of 0.5 mm or less (preferably 0.2 mm or less, and more preferably 0.1 mm or less). When the upper end surface **55*a*** of the plug **55** is made higher than the reference surface **21*c***, there is no particular restriction as long as the upper end surface **55*a*** of the plug **55** is made lower than the upper surface of the protrusion **21*b*** and the outflow of gas from the plug **55** is not inhibited.

[0103] There is no particular restriction on the height position of the lower end surface **55*b*** of the plug **55**. Therefore, the height position of the lower end surface **55*b*** of the plug **55** may be the same height as the lower surface **23** of the ceramic substrate **20**, or may be at a different height. For example, the lower end surface **55*b*** of the plug **55** may protrude below the lower surface **23** of the ceramic substrate **20**, or the lower end surface **55*b*** of the plug **55** may be provided above the lower surface **23** of the ceramic substrate **20**.

[0104] In the second embodiment, there is no restriction regarding the height D of the gas passage in the vertical direction, as described in the first embodiment. Therefore, the height D of the gas passage **55*d*** in the vertical direction may be constant or may be changed midway. However, from the viewpoint of ensuring a necessary gas flow rate when supplying gas between the wafer W and the ceramic substrate **20**, the height D of the gas passage in the vertical direction **55*d*** is preferably large. Specifically, the height D of the gas passage **55*d*** in the vertical direction is preferably 10 μm or more, more preferably 50 μm or more, and even more preferably 100 μm or more, over the entire length of the gas passage **55*d***. On the other hand, from the viewpoint of reducing the risk of discharge by ensuring the passage length and ensuring the strength of the plug, the height D of the gas passage **55*d*** in the vertical direction is preferably 300 μm or less, more preferably 200 μm or less, over the entire length of the gas passage **55*d***. The height D of the gas passage **55*d*** in the vertical direction is, for example, preferably 10 to 300 μm, more preferably 50 to 200 μm, and even more preferably 100 to 200 μm, over the entire length of the gas passage **55*d***. When a coordinate axis is taken in the vertical direction, the definition of the height D of the gas passage **55*d*** in the vertical direction at a specific coordinate value is as described above.

[0105] From the viewpoint of suppressing the growth of microscopic cracks that may occur in the plug, it is desirable that the plug **55** has a large fracture toughness value (KIC). Specifically, it is preferable that the fracture toughness value (KIC) of the portion of the plug **55** composed of the dense body **55*c*** is larger than the fracture toughness value (KIC) of the ceramic substrate **20**. Since the processing conditions for components for semiconductor manufacturing equipment are often set based on the ceramic substrate **20**, when the fracture toughness value (KIC) of the portion of the plug **55** composed of the dense body **55*c*** is larger than the fracture toughness value (KIC) of the ceramic substrate **20**, the risk of chipping occurring in the plug **55** is reduced.

[0106] The fracture toughness value (KIC) of the portion of the plug **55** composed of the dense body **55*c*** is preferably 2 $MPa \cdot m^{1/2}$ or more, more preferably 3 $MPa \cdot m^{1/2}$ or more, and even more preferably 4 $MPa \cdot m^{1/2}$ or more. Although no particular upper limit is set for the fracture toughness value (KIC) of the portion of the plug **55** composed of the dense body **55*c***, from the viewpoint of ease of manufacture, it is preferably 13 $MPa \cdot m^{1/2}$ or less, more preferably 12 $MPa \cdot m^{1/2}$ or less, and even more preferably 11 $MPa \cdot m^{1/2}$ or less. Therefore, the fracture toughness value (KIC) of the portion of the plug **55** composed of the dense body **55*c*** is preferably 2 to 13 $MPa \cdot m^{1/2}$, more preferably 3 to 12 $MPa \cdot m^{1/2}$, and even more preferably 4 to 11 $MPa \cdot m^{1/2}$.

[0107] The fracture toughness value (KIC) of the portion of the plug **55** composed of the dense body **55*c*** and the ceramic substrate **20** is measured in accordance with the Single Edge Precracked Beam method (SEPB method) specified in JIS R1607: 2015.

[0108] As the material constituting the plug **55**, electrically insulating ceramics can be used, and for example, it may contain one or more selected from aluminum oxide, aluminum nitride, and silicon dioxide. It can also be composed of only one or two selected from aluminum oxide, aluminum nitride, and silicon dioxide, excluding impurities. Quartz is preferable as silicon dioxide. In particular, in order to control the fracture toughness value (KIC) of the portion of the plug **55** composed of the dense body **55*c*** within the above range, it is preferable that the portion of the plug **55** composed of the dense body **55*c*** be made of a ceramic material such as alumina (aluminum oxide) having high fracture toughness.

[0109] Further, in order to maintain the fixing strength of the plug **55** embedded in the plug placement hole **50**, it is preferable that the difference in thermal expansion coefficient between the plug **55** and the ceramic substrate **20** is small. Therefore, the material constituting the plug **55** and the material constituting the ceramic substrate **20** preferably both contain at least one selected from aluminum oxide and aluminum nitride, and it is more preferable that the material compositions are the same.

[0110] The outer peripheral surface **55*e*** of the plug **55** and the inner peripheral surface **50*c*** of the plug placement hole **50** may be bonded together with an adhesive, but it is preferable that they fit directly together without using an adhesive. By directly fitting the two, no gap is created

between the plug **55** and the plug placement hole **50** due to deterioration as a result of corrosion or erosion of the adhesive. Therefore, there is an advantage that discharge and falling off of the plug **55** due to deterioration of the adhesive can be suppressed.

[0111] Furthermore, as shown in FIG. **2-1**, when observing a vertical cross section obtained by cutting the ceramic substrate **20** in the thickness direction, from the viewpoint of improving the fixing strength of the plug **55**, it is preferable that the inner peripheral surface **50***c* of the plug placement hole **50** be in contact with the outer peripheral surface **55***e* of the plug **55** in a parallel positional relationship. In other words, the outer peripheral surface **55***e* of the plug **55** has the same inclination angle as the inner peripheral surface **50***c* of the plug placement hole **50**. Therefore, in a preferred embodiment, the plug **55** has the same outer shape as the plug placement hole **50** (for example, a truncated cone shape or a truncated pyramid shape). Thereby, the area where the inner peripheral surface **50***c* of the plug **55** contacts the outer peripheral surface **55***e* of the plug **55** can be increased, and high fixing strength can be obtained.

[0112] An example of a direct fitting method is a method of embedding the plug **55** by press-fitting it into the plug placement hole **50**. In this case, in order to obtain the desired fixation strength, it is preferable that the cross-sectional diameter in the horizontal direction at any height position of the plug **55** before press-fitting is made slightly larger (for example, by about 5 to 20 μm in equivalent circle diameter) than the horizontal cross-sectional diameter of the plug placement hole **50** located at the same height position. Further, as a direct fitting method, there is also a method in which a male threaded portion provided on the outer peripheral surface **55***a* of the plug **55** is screwed into a female threaded portion provided on the inner peripheral surface **50***c* of the plug placement hole **50**.

[0113] As a method for manufacturing the plug **55** having such a dense body and a gas passage penetrating the inside thereof, mention may be made to a method of firing a molded body formed using an additive manufacturing technology such as a 3D printer, for example. Alternatively, it may be formed by mold casting. The details of mold casting are as described above.

[0114] The porosity of the plug can be controlled, for example, by adjusting the content of the pore-forming material in the raw material composition before producing the ceramic material that constitutes the plug by firing. For example, in order to make the plug denser, the amount of pore-forming material may be reduced or it may not be used.

[0115] Other configurations of the member **10** for a semiconductor manufacturing equipment according to the second embodiment are the same as those described for the member **10** for a semiconductor manufacturing equipment according to the first embodiment, so duplicate description will be omitted.

<3. How to Use a Member for Semiconductor Manufacturing Equipment>

[0116] Next, a method of using the member **10** for a semiconductor manufacturing equipment configured in this way will be exemplified. First, a wafer W is placed on the upper surface **21** of the ceramic substrate **20** with the member **10** for a semiconductor manufacturing equipment installed in a chamber (not shown). Then, the pressure inside the chamber is reduced with a vacuum pump and adjusted to the desired degree of vacuum, and a voltage is applied to the electrodes **22** of the ceramic substrate **20** to generate electrostatic adsorption force, and the wafer W is adsorbed and fixed to the wafer placement surface (specifically, the upper surface of the seal band **21***a* or the upper surface of the protrusion **21***b*).

[0117] Next, the inside of the chamber is set to a reaction gas atmosphere at a predetermined pressure (for example, several tens to several hundreds of Pa), and in this state, a high frequency voltage such as an RF voltage is applied between an upper electrode (not shown) provided on the ceiling of the chamber and the base plate **30** of the member **10** for a semiconductor manufacturing equipment to generate plasma. The surface of the wafer W is processed by the generated plasma. A refrigerant circulates in the refrigerant passage **32** of the base plate **30**. The backside gas for cooling or the like is introduced into the gas supply path **60** from a gas cylinder (not shown) between the wafer W and the ceramic substrate **20** for the purpose of increasing the heat transfer efficiency and promoting cooling. A thermally conductive gas (for example, He gas) can be used as the backside gas. The backside gas is supplied to the plurality of the plug placement holes **50** through the gas supply path **60**, and is supplied and sealed in the space between the back surface of the wafer W and the reference surface **21***c* of the wafer placement surface. The presence of this backside gas allows efficient heat conduction between the wafer W and the ceramic substrate **20**.

[0118] Further, by providing the plug **55** in the plug placement hole **50**, electric discharge within the plug placement hole **50** can be suppressed. If there is no plug **55**, electrons generated as gas molecules are ionized by the application of RF voltage are accelerated and collide with other gas molecules, causing glow discharge and eventually arc discharge. However, when the plug **55** is present, the electrons hit the plug **55** before colliding with the other gas molecules, so that discharge is suppressed.

<4. Method for Manufacturing a Member for Semiconductor Manufacturing Equipment>

[0119] Next, a method for manufacturing the member **10** for a semiconductor manufacturing equipment will be exemplarily described based on FIG. **4**. First, a ceramic substrate **20**, a base plate **30**, and a metal bonding material **90** are prepared (FIG. **4**A). The ceramic substrate **20** can be prepared by the following procedure. A disk-shaped sintered ceramic plate, which is the precursor of the ceramic substrate **20**, is prepared by hot-press firing a molded body of ceramic powder. The molded body may be prepared by laminating a plurality of tape molded bodies, or may be prepared by a mold casting method, or may be prepared by compacting ceramic powder. The ceramic sintered plate has an electrode **22** therein. Next, a plug placement hole **50** is formed to vertically penetrate the ceramic sintered plate while avoiding the electrode **22**. The plug placement hole **50** can be formed by machining. Further, a plurality of protrusions **21***b* and a seal band **21***a* are formed on the upper surface of the ceramic sintered plate by laser processing or the like. The plurality of protrusions **21***b* and the seal band **21***a* may be formed after the ceramic substrate **20** and the base plate **30** are joined.

[0120] The base plate **30** includes a coolant passage **32** and a gas hole **34**. The gas hole **34** has a large diameter portion **34***a* facing the upper surface **31**. The base plate **30**

including the refrigerant passage **32** can be manufactured by, for example, joining a plurality of MMC plate members, in which grooves or holes corresponding to the refrigerant passage **32** are formed, by machining using a method such as TCB (Thermal Compression Bonding). The gas holes **34** can be formed by machining the base plate **30** after the refrigerant passages **32** have been formed. The metal bonding material **90** includes a through hole **92** at a position facing the large diameter portion **34***a* of the gas hole **34**. The through hole **92** can be formed by machining.

[0121] Subsequently, a metal bonding material **90** is sandwiched between the lower surface **23** of the ceramic substrate **20** and the upper surface **31** of the base plate **30** to form a laminate. At this time, it is preferable to laminate them such that the plug placement hole **50** of the ceramic substrate **20**, the through hole **92** of the metal bonding material **90**, and the gas hole **34** of the base plate **30** are coaxial. Then, the laminate is pressurized and bonded at a temperature no higher than the solidus temperature of the metal bonding material **90** (for example, the temperature 20° C. lower than the solidus temperature or more and no higher than the solidus temperature), and then returned to room temperature (TCB). Thereby, the metal bonding material **90** and the through hole **92** become the bonding layer **40** and the through hole **42**, respectively, and a bonded body **94** in which the ceramic substrate **20** and the base plate **30** are bonded by the bonding layer **40** is obtained (FIG. **6**B). The metal bonding material **90** preferably has a thickness of approximately 100 μm (for example, 80 to 240 μm).

[0122] Next, a plug **55** having a size and shape that can fit into the plug placement hole **50** is prepared (FIG. **4**B). The height of the plug **55** is the same as the depth of the plug placement hole **50**. Next, the plug **55** is press-fitted into the plug placement hole **50** from the upper opening **50***a* of the ceramic substrate **20** toward the lower opening **50***b*. Alternatively, a male threaded portion is formed on the outer peripheral surface **55***e* of the plug **55**, which has been formed in advance by firing or the like, and a female threaded portion is formed on the inner peripheral surface **50***c* of the plug placement hole **50**, and the plug **55** may be installed by screwing and inserting the plug **55** into the plug placement hole **50** so that the male threaded portion of the plug **55** and the female threaded portion of the plug placement hole **50** are screw fitted together. Thereafter, the member **10** for a semiconductor manufacturing equipment is completed by appropriately going through processes such as adjusting the overall shape (FIG. **4**C).

DESCRIPTION OF REFERENCE NUMERALS

[0123] **10**: Member for semiconductor manufacturing equipment
[0124] **20**: Ceramic substrate
[0125] **21**: Upper surface
[0126] **21***a*: Seal band
[0127] **21***b*: Protrusion
[0128] **21***c*: Reference surface
[0129] **21***d*: Recess
[0130] **22**: Electrode
[0131] **23**: Lower surface
[0132] **30**: Base plate
[0133] **31**: Upper surface
[0134] **32**: Refrigerant passage
[0135] **33**: Lower surface
[0136] **34**: Gas hole
[0137] **34***a*: Large diameter portion
[0138] **40**: Bonding layer
[0139] **42**: Through hole
[0140] **50**: Plug placement hole
[0141] **50***a*: Upper opening
[0142] **50***b*: Lower opening
[0143] **50***c*: Inner peripheral surface
[0144] **55**: Plug
[0145] **55***a*: Upper end surface
[0146] **55***a***1**: Upper end opening
[0147] **55***b*: Lower end surface
[0148] **55***b***1**: Lower end opening
[0149] **55***c*: Dense body
[0150] **55***d*: Gas passage
[0151] **55***d***1**: Surface
[0152] **55***e*: Outer peripheral surface
[0153] **55***f*: Upper end portion
[0154] **55***f***1**: Side surface
[0155] **55***f***2**: Side surface opening
[0156] **60**: Gas supply path
[0157] **64***a*: Ring portion
[0158] **64***b*: Gas introduction portion
[0159] **64***c*: Distribution section
[0160] **90**: Metal bonding material
[0161] **92**: Through hole

1. A member for a semiconductor manufacturing equipment, comprising:

a ceramic substrate having an upper surface on which a wafer is to be placed and a lower surface; a plug placement hole that vertically penetrates the ceramic substrate; and a plug embedded in the plug placement hole;

wherein the plug is composed of a dense body, comprising an upper end surface exposed on a side of the upper surface, a lower end surface exposed on a side of the lower surface, and a gas passage that penetrates an inside of the dense body and extends from an upper end opening provided on the upper end surface to a lower end opening provided on the lower end surface; and

wherein a maximum height D_1 in the vertical direction from the upper end opening to a surface of the gas passage, and a maximum height D_2 in the vertical direction from the lower end opening to the surface of the gas passage satisfies a relationship: $D_1<D_2$.

2. The member for a semiconductor manufacturing equipment according to claim **1**, wherein a relationship: $0.1 \leq D_1/D_{2 \leq 0.9}$ is satisfied.

3. The member for a semiconductor manufacturing equipment according to claim **1**, wherein the maximum height D_1 is 10 to 300 μm.

4. The member for a semiconductor manufacturing equipment according to claim **1**, wherein the maximum height D_2 is 50 to 500 μm.

5. The member for a semiconductor manufacturing equipment according to claim **1**, wherein taking a coordinate axis in the vertical direction, and assuming a coordinate value of the upper end surface of the plug is 0, and a coordinate value of the lower end surface is H, a height D of the gas passage in the vertical direction satisfies a relationship: $D \geq 1.5\ D_1$ at least within a range of coordinate value from 0.5×H to 1.0×H.

6. The member for a semiconductor manufacturing equipment according to claim **5**, wherein the height D of the gas

passage in the vertical direction satisfies a relationship: $D_1 \leq D < 1.5\ D_1$ at least within a range of coordinate value from 0 to less than 0.1×H.

7. The member for a semiconductor manufacturing equipment according to claim **1**, wherein the plug comprises a plurality of gas passages, and for all of the plurality of gas passages, the relationship $D_1 < D_2$ is satisfied.

8. The member for a semiconductor manufacturing equipment according to claim **1**, wherein a fracture toughness (KIC) of a part of the plug composed of the dense body is larger than a fracture toughness (KIC) of the ceramic substrate.

9. A member for a semiconductor manufacturing equipment, comprising:

a ceramic substrate having an upper surface on which a wafer is to be placed and a lower surface; a plug placement hole that vertically penetrates the ceramic substrate; and a plug embedded in the plug placement hole;

wherein the plug is composed of a dense body, comprising an upper end portion having an upper end surface exposed on a side of the upper surface, a lower end surface exposed on a side of the lower surface, and a gas passage that penetrates an inside of the dense body and extends from a side surface opening provided on a side surface of the upper end portion to a lower end opening provided on the lower end surface.

10. The member for a semiconductor manufacturing equipment according to claim **9**, wherein a concave portion is formed on the upper surface on which a wafer is to be placed, and the upper end portion of the plug protrudes from a bottom of the concave portion such that the side surface opening is exposed.

11. The member for a semiconductor manufacturing equipment according to claim **9**, wherein a height D of the gas passage in the vertical direction is 10 to 300 μm.

12. The member for a semiconductor manufacturing equipment according to claim **9**, wherein a fracture toughness (KIC) of a part of the plug composed of the dense body is larger than a fracture toughness (KIC) of the ceramic substrate.

13. The member for a semiconductor manufacturing equipment according to claim **9**, wherein the plug comprises a plurality of gas passages, and each of the plurality of gas passages is a gas passage that penetrates the inside of the dense body and extends from the side surface opening provided on the side surface of the upper end portion to the lower end opening provided on the lower end surface.

* * * * *