US 20250277934A1

(19) United States
(12) Patent Application Publication
KAMATA et al.
(10) Pub. No.: US 2025/0277934 A1
(43) Pub. Date: Sep. 4, 2025

(54) **OPTICAL WAVEGUIDE STRUCTURE**

(71) Applicants: **DENSO CORPORATION**, Kariya-city (JP); **TOYOTA JIDOSHA KABUSHIKI KAISHA**, Toyota-shi (JP); **MIRISE Technologies Corporation**, Nisshin-shi (JP)

(72) Inventors: **Yuki KAMATA**, Nisshin-shi (JP); **Masashige SATO**, Nisshin-shi (JP); **Koichi OYAMA**, Nisshin-shi (JP)

(21) Appl. No.: **19/032,642**

(22) Filed: **Jan. 21, 2025**

(30) **Foreign Application Priority Data**

Mar. 1, 2024 (JP) 2024-031380

Publication Classification

(51) **Int. Cl.**
G02B 6/12 (2006.01)
G01M 11/02 (2006.01)

(52) **U.S. Cl.**
CPC *G02B 6/12011* (2013.01); *G01M 11/0207* (2013.01); *G02B 6/12021* (2013.01)

(57) **ABSTRACT**

In an optical waveguide structure, light emitting portions are respectively disposed on waveguides extending in a first direction on a substrate. The light emitting portions are configured to emit a part of lights that have passed through phase adjusters and propagate through the waveguides as emitted lights in a direction different from a direction in which optical antenna units emit the lights. A photoelectric converter is disposed on the substrate, and is disposed on one side, the other side, or both sides in a second direction that is perpendicular to the first direction with respect to all of the light emitting portions. A position of the photoelectric converter is set so that an emitted beam formed by the emitted lights from the light emitting portions is incident on the photoelectric converter when phases of the emitted lights are matched with each other.

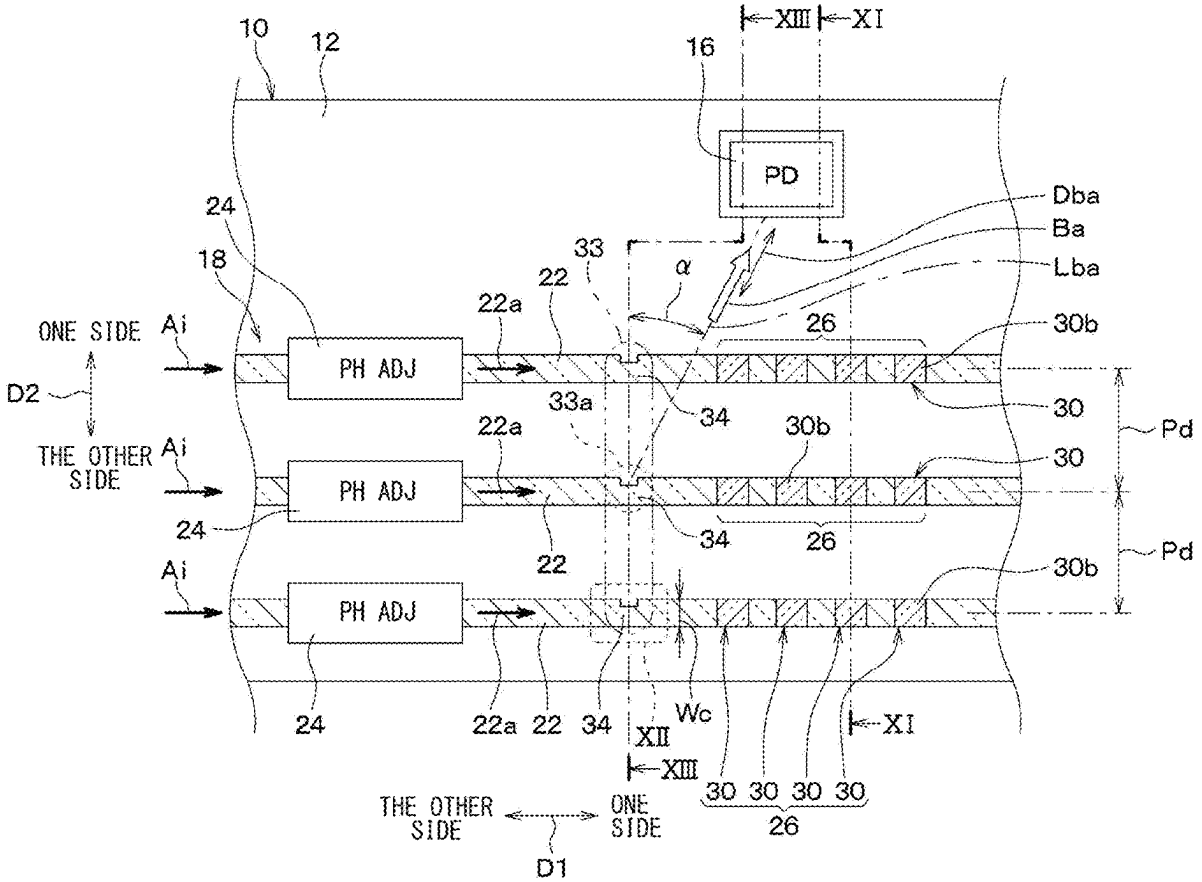

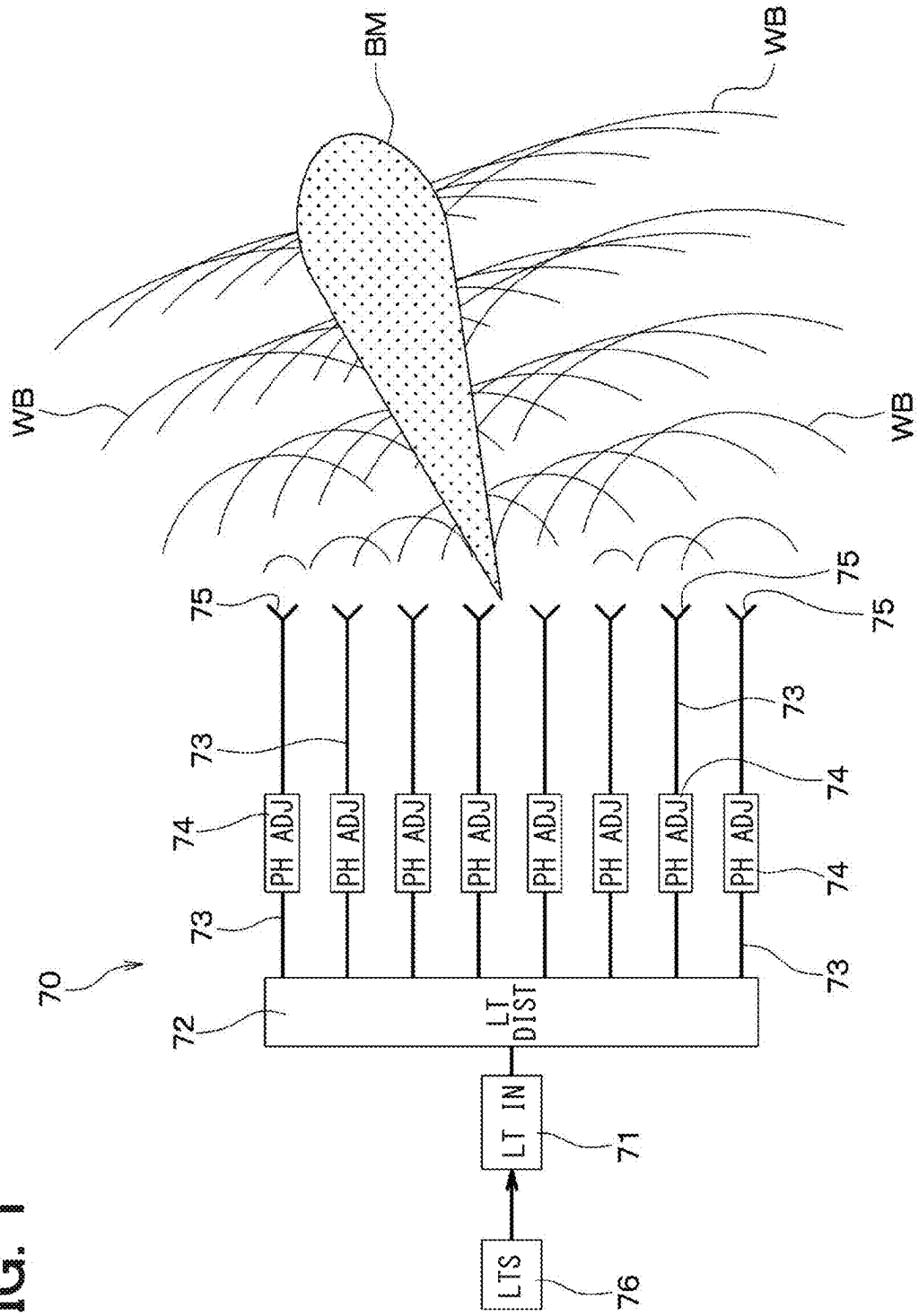
BM
WB
WB
WB
75
75
75
73
73
73
74
74
74
PH ADJ
PH ADJ
PH ADJ
PH ADJ
PH ADJ
PH ADJ
PH ADJ
PH ADJ
70
72
LT DIST
LT IN
71
LTS
76

FIG. 1

FIG. 2

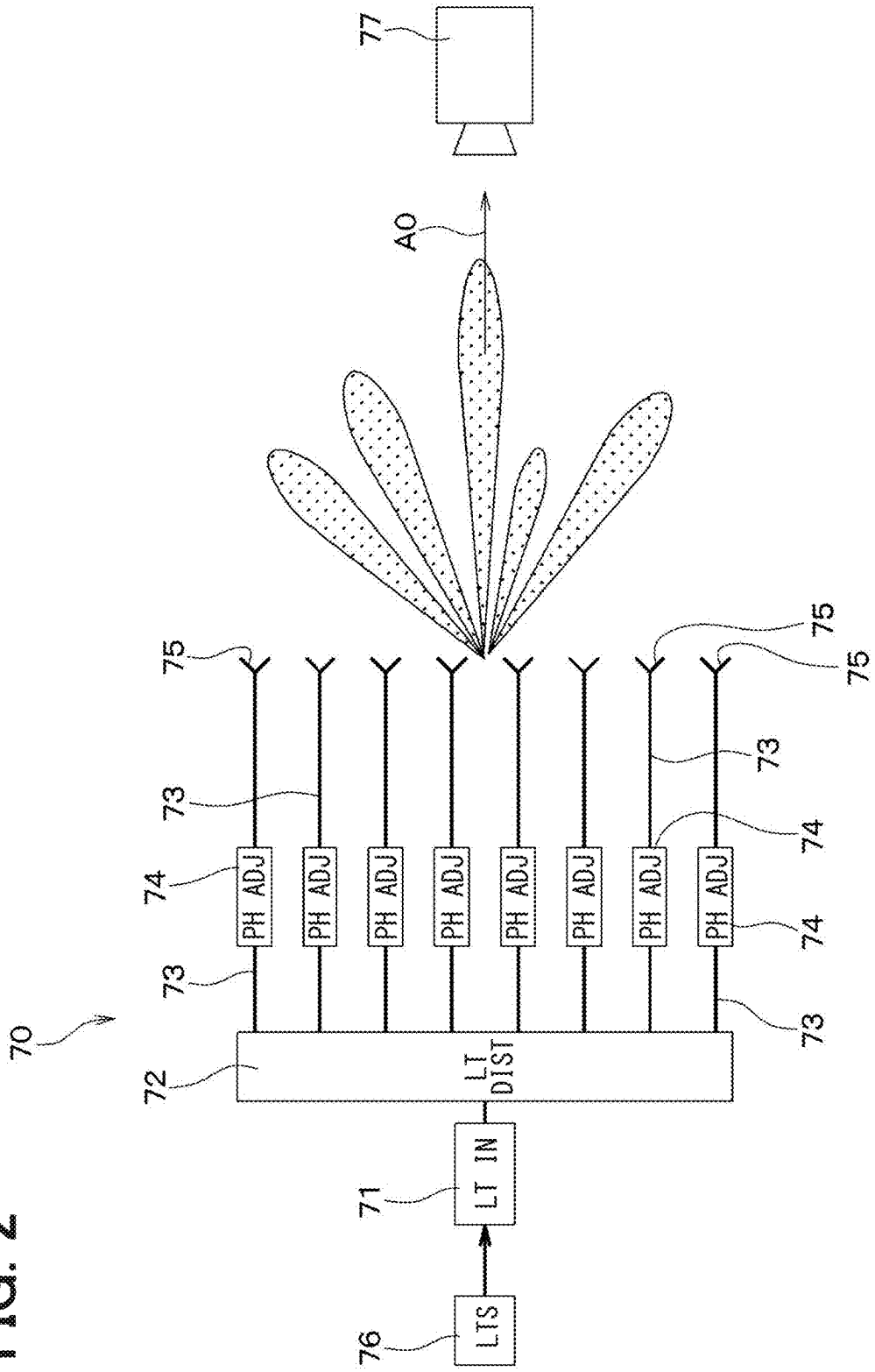
77
AO
75
75
75
73
73
74
74
74
PH ADJ
PH ADJ
PH ADJ
PH ADJ
PH ADJ
PH ADJ
PH ADJ
PH ADJ
73
73
70
72
LT DIST
71
LT IN
76
LTS

FIG. 3

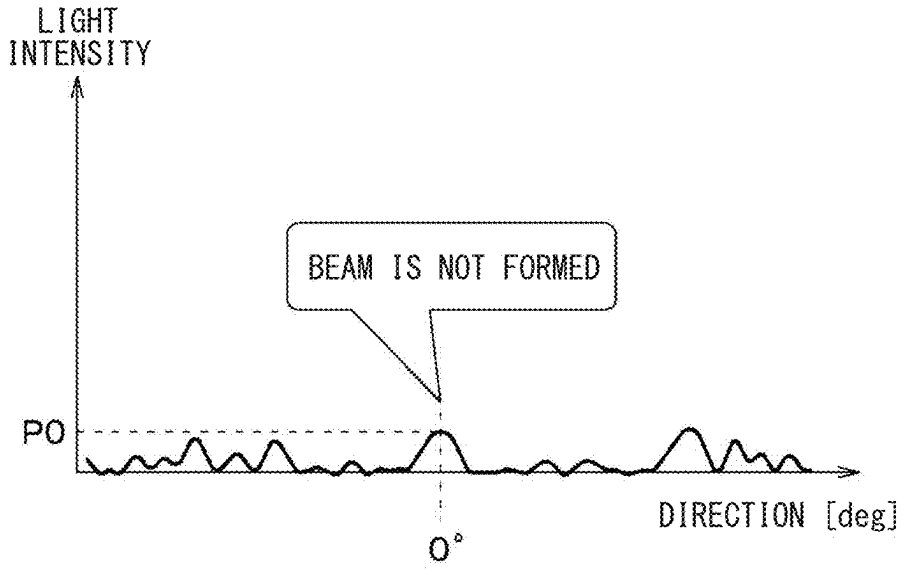

FIG. 4

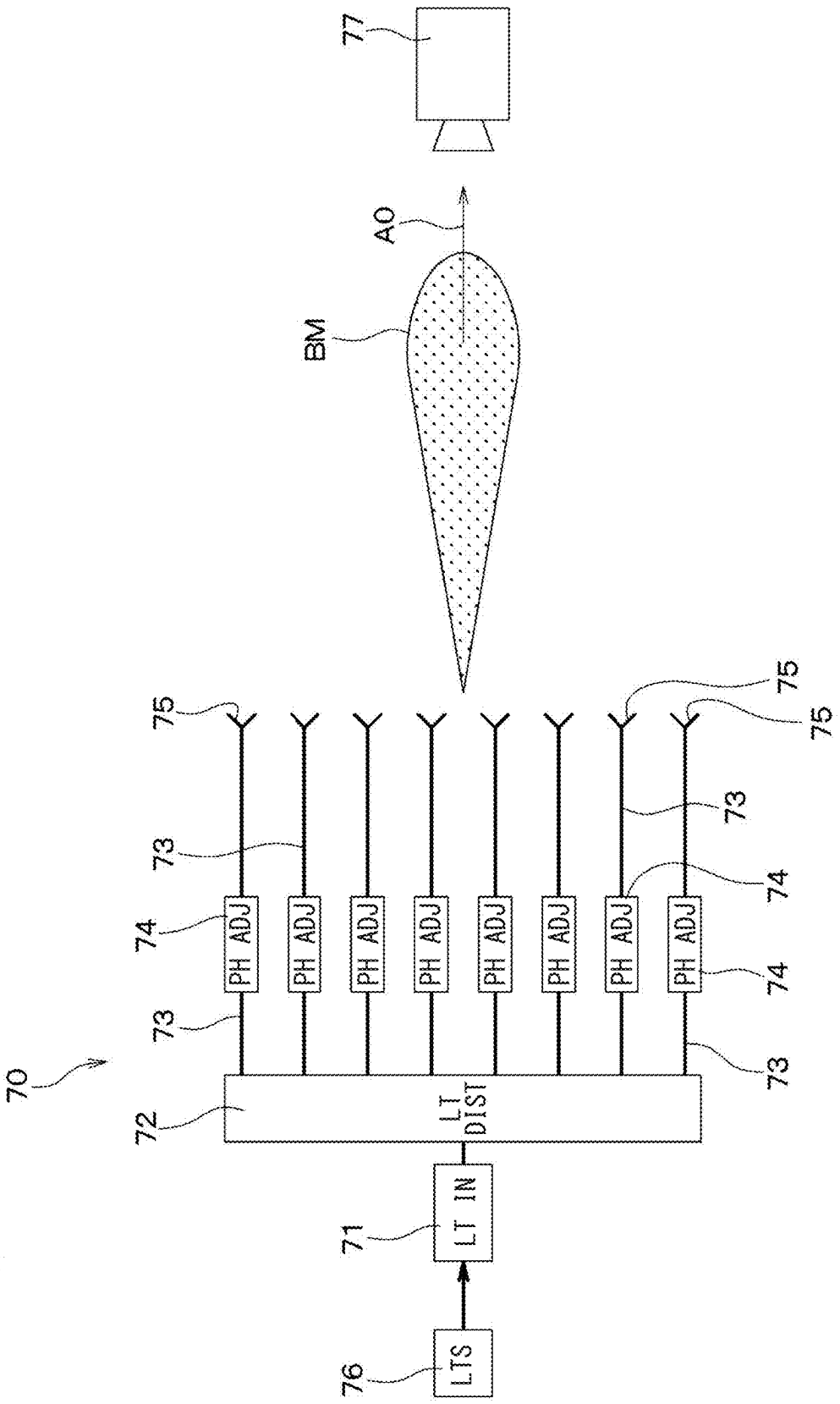
77
A0
BM
75
75
75
73
73
73
74
74
74
PH ADJ
PH ADJ
PH ADJ
PH ADJ
PH ADJ
PH ADJ
PH ADJ
PH ADJ
70
72
LT DIST
71
LT IN
76
LTS

FIG. 5

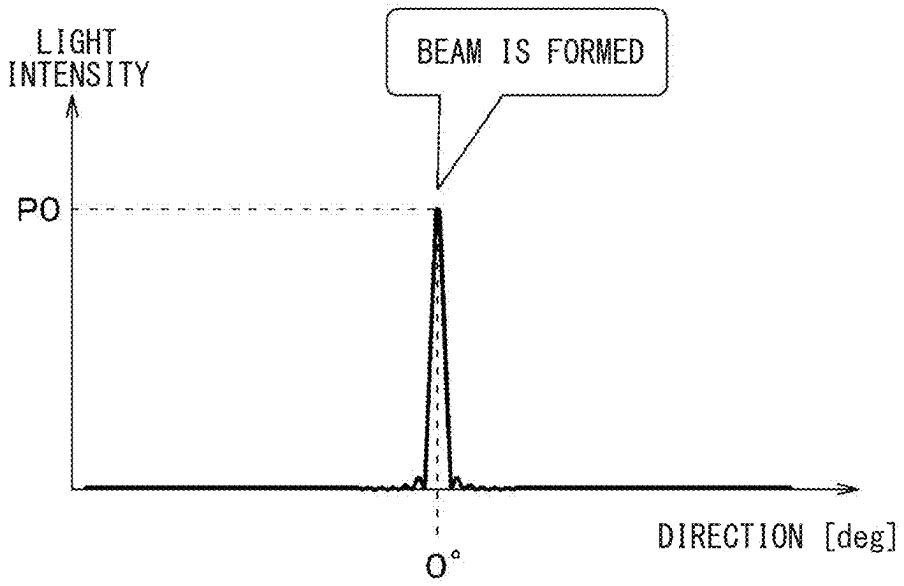

FIG. 6

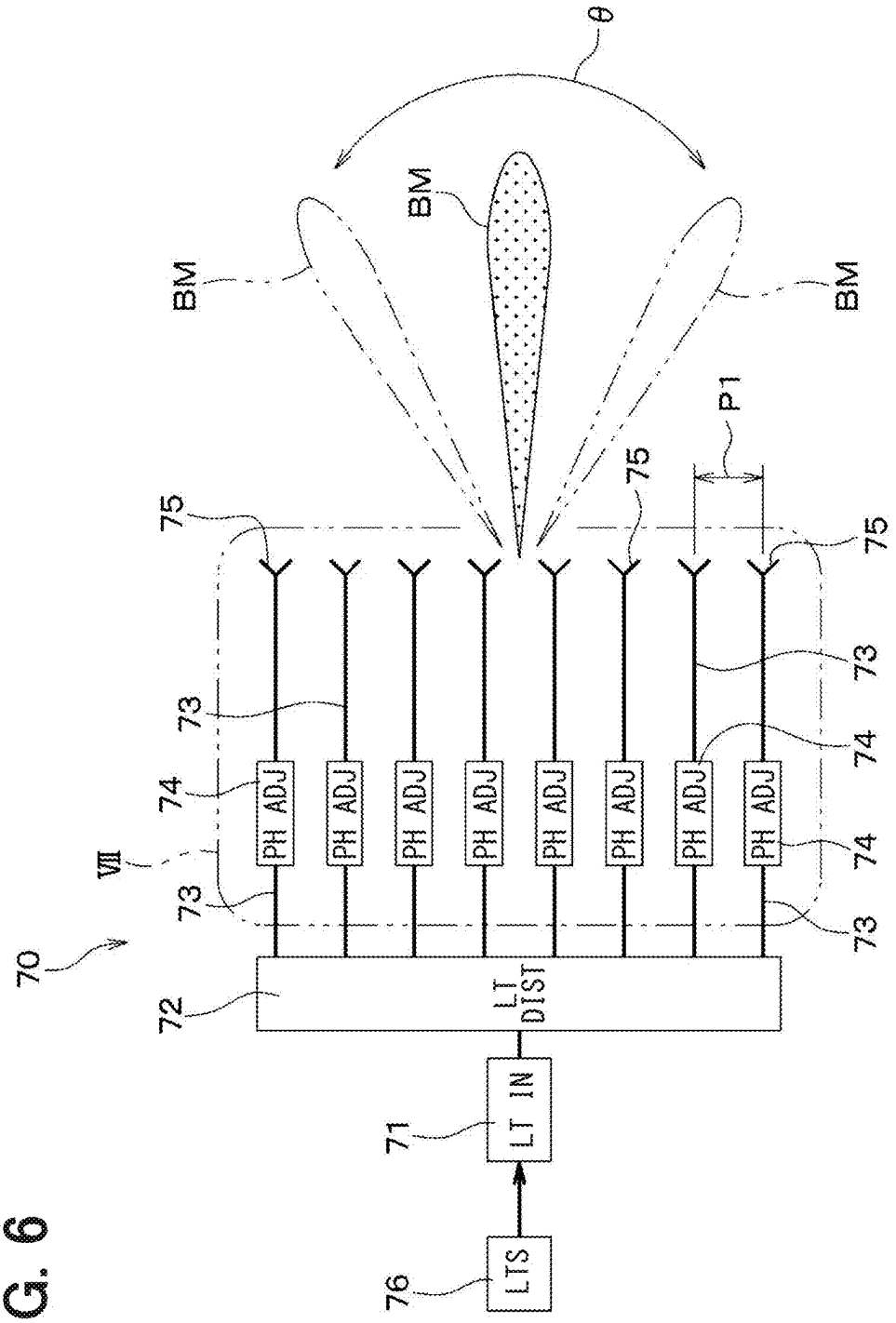
θ
BM
BM
BM
P1
75
75
75
73
73
73
73
74
74
74
PH ADJ
PH ADJ
PH ADJ
PH ADJ
PH ADJ
PH ADJ
PH ADJ
PH ADJ
VII
70
72
LT DIST
71
LT IN
76
LTS

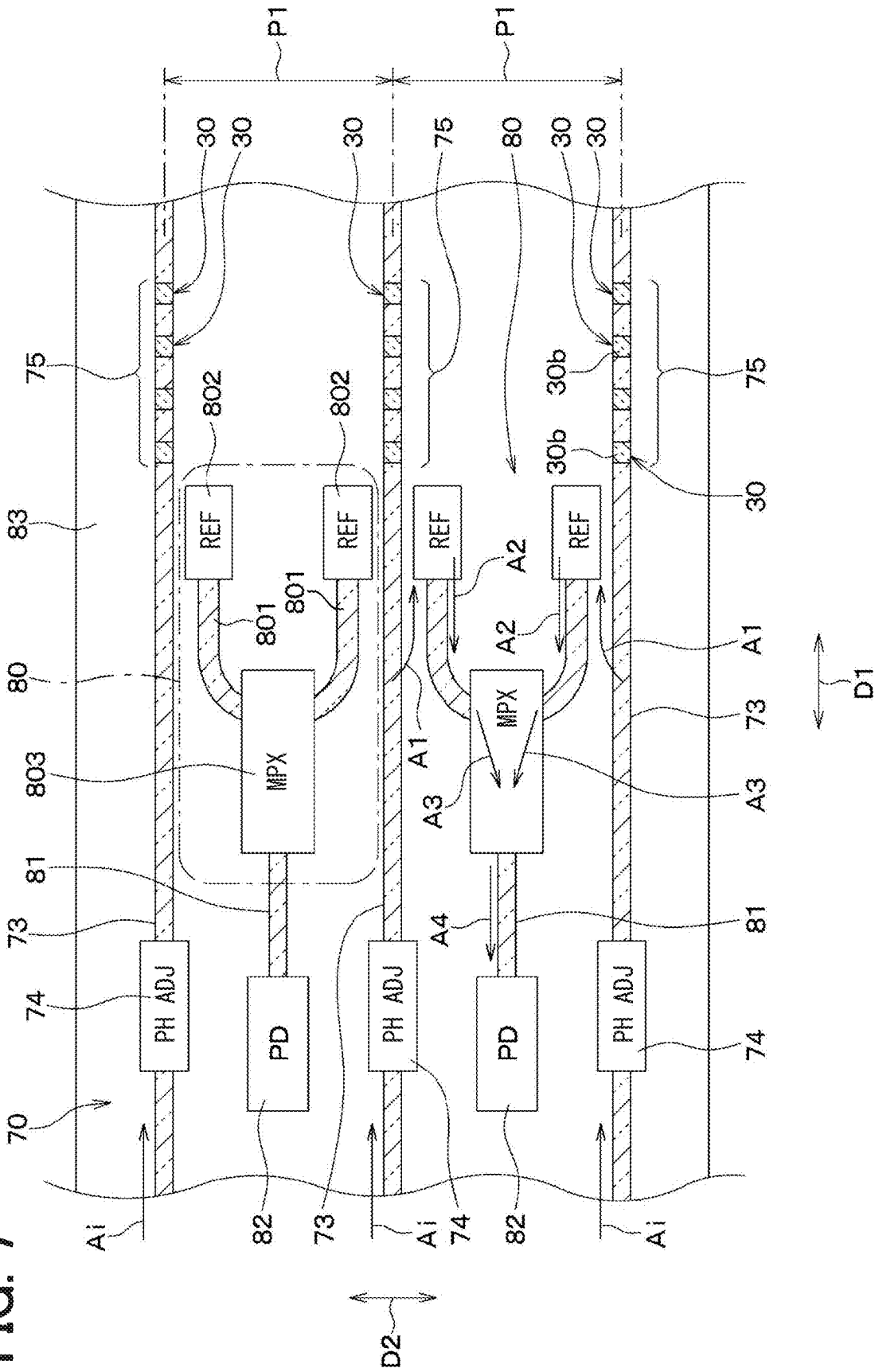
P1
P1
30
30
30
75
80
30
30
75
802
802
30b
30b
30
75
83
REF
REF
REF
REF
A2
801
801
A2
A1
80
MPX
MPX
73
A1
803
A3
A3
81
A4
81
73
74
PH ADJ
PD
PH ADJ
PD
PH ADJ
74
70
Ai
82
73
Ai
74
82
Ai
D1
D2

FIG. 7

FIG. 8

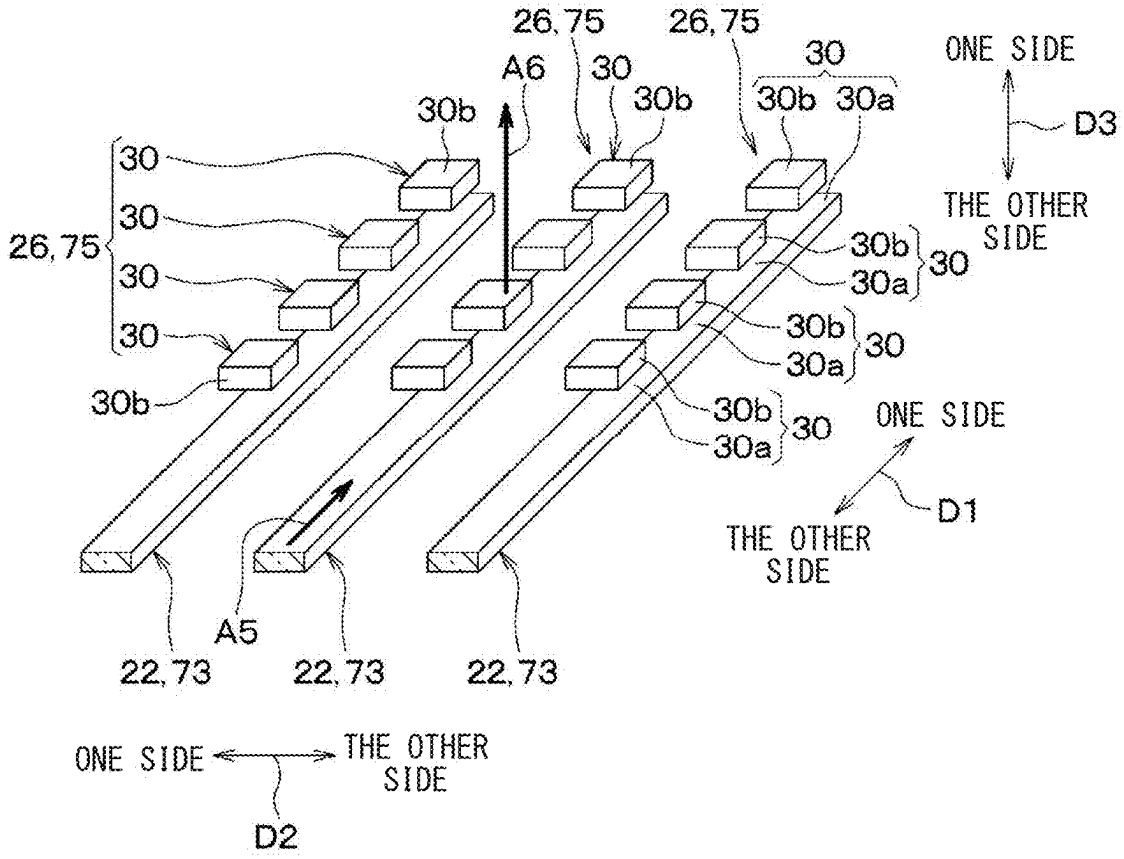
26,75
26,75
A6
30
30b
30
30b
30a
ONE SIDE
D3
THE OTHER SIDE
26,75
30
30
30
30
30b
30b
30a
30
30b
30a
30
30b
30a
30
ONE SIDE
D1
THE OTHER SIDE
A5
22,73
22,73
22,73
ONE SIDE
THE OTHER SIDE
D2

FIG. 9

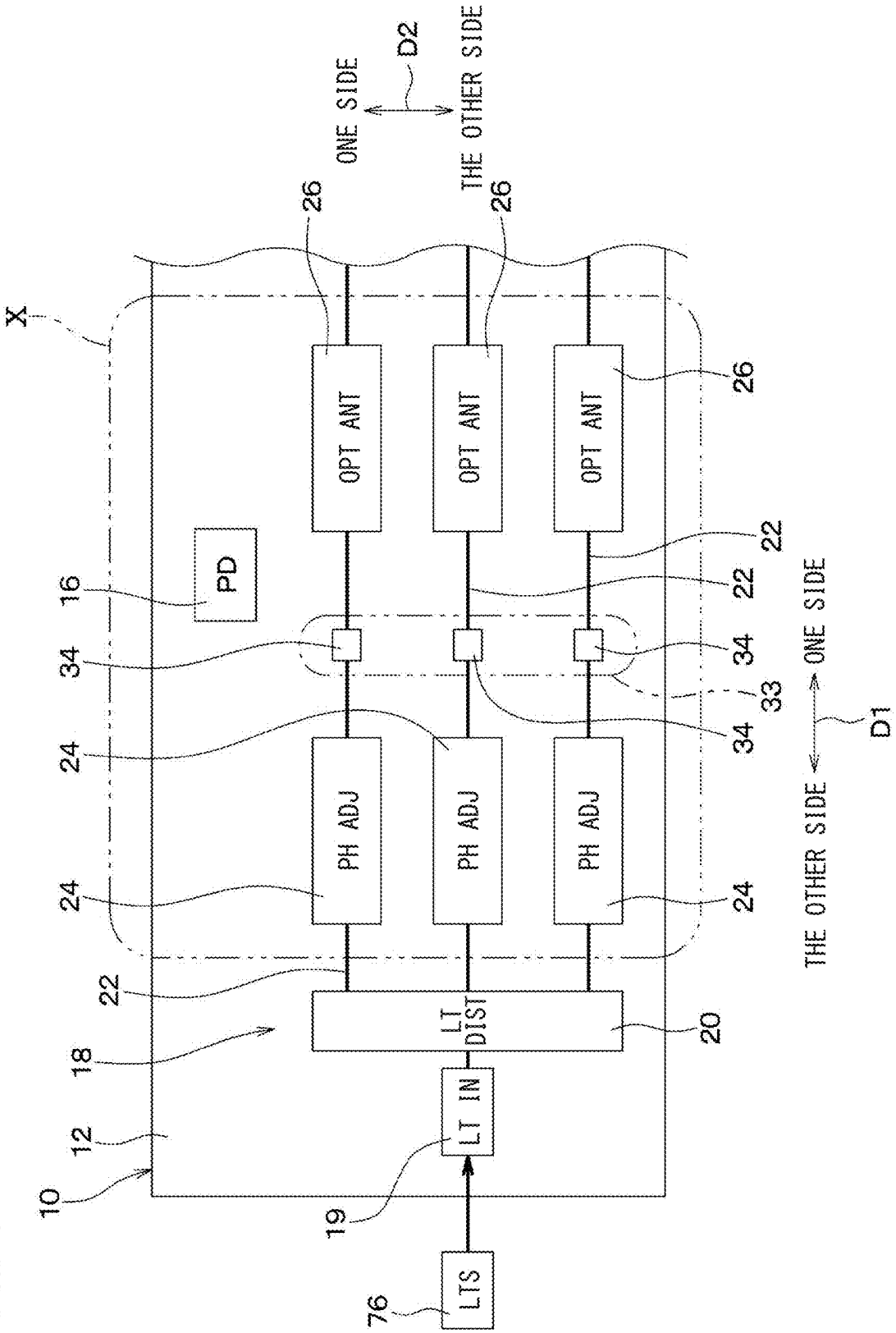
X
ONE SIDE
D2
THE OTHER SIDE
26
26
26
OPT ANT
OPT ANT
OPT ANT
PD
16
22
22
34
34
34
33
24
PH ADJ
PH ADJ
PH ADJ
24
24
22
LT DIST
20
18
LT IN
12
10
19
LTS
76
THE OTHER SIDE
ONE SIDE
D1

FIG. 10

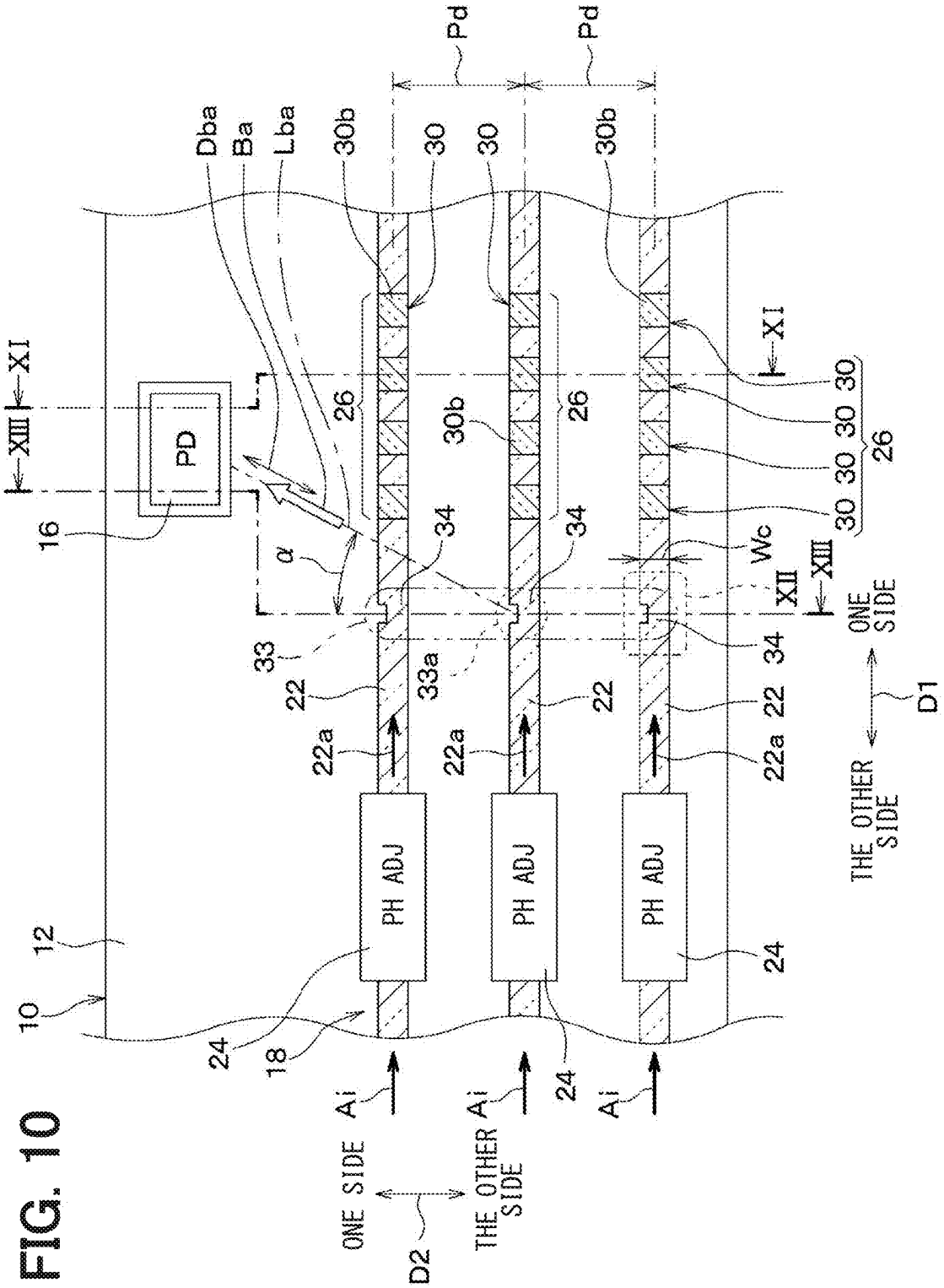
Pd
Pd
Dba
Ba
Lba
30b
30
30
30b
XI
XI
XIII
XIII
PD
16
26
30b
26
30
30
30
30
26
α
34
34
Wc
XII
33
33a
34
22
22
22
22a
22a
22a
PH ADJ
PH ADJ
PH ADJ
24
24
24
12
10
18
Ai
Ai
Ai
ONE SIDE
THE OTHER SIDE
D2
ONE SIDE
THE OTHER SIDE
D1

FIG. 11

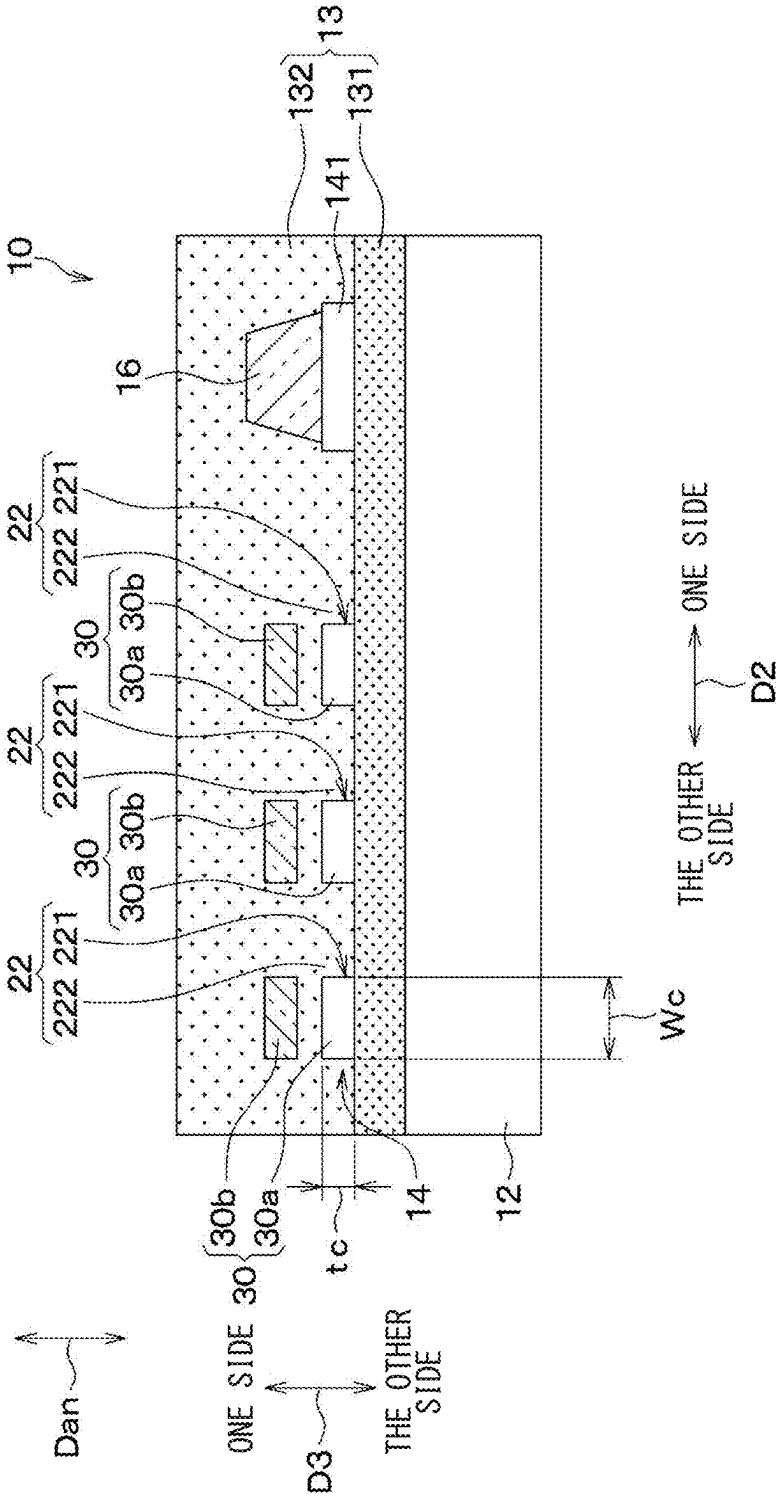
10
13
132
131
141
16
22
221
222
30
30a
30b
Wc
ONE SIDE
THE OTHER SIDE
D2
12
14
tc
Dan
D3

FIG. 12

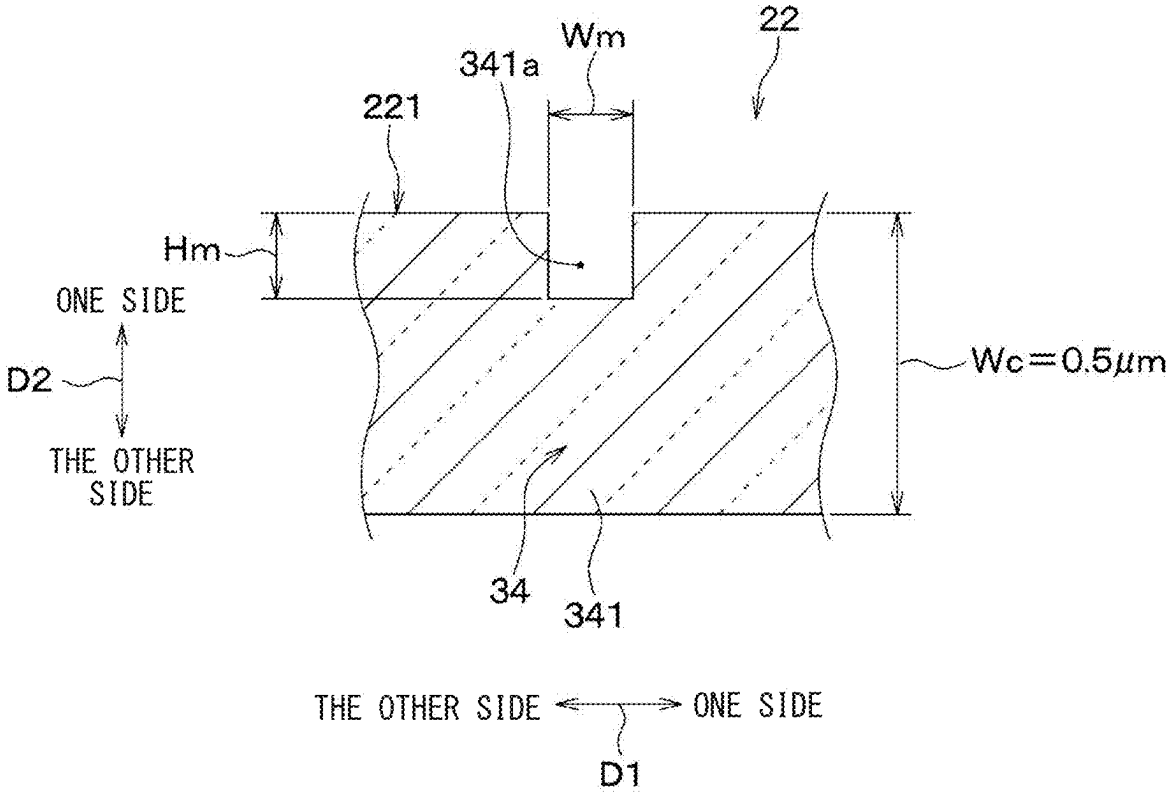
22
Wm
341a
221
Hm
ONE SIDE
D2
THE OTHER SIDE
Wc=0.5μm
34
341
THE OTHER SIDE
ONE SIDE
D1

FIG. 13

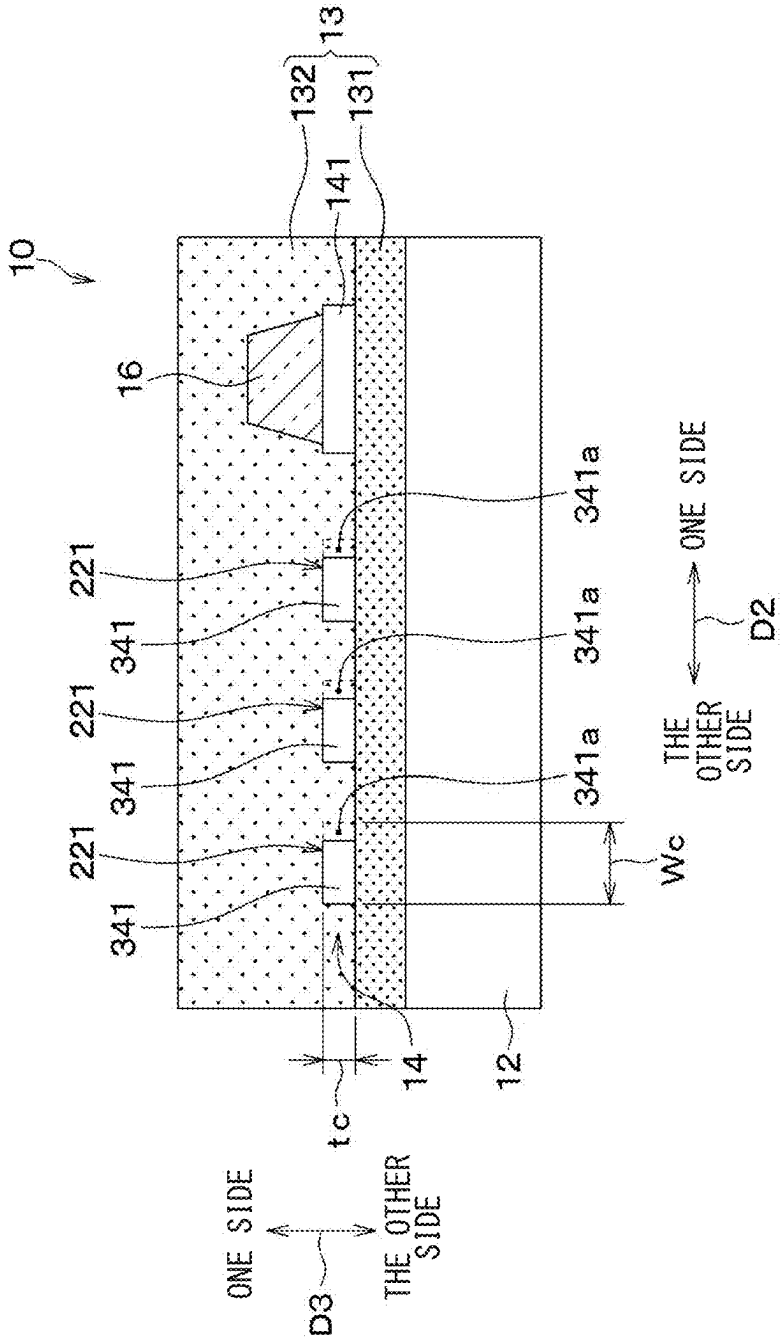
10
13
132
131
141
16
221
341
341a
Wc
ONE SIDE
THE OTHER SIDE
D2
14
12
tc
D3

FIG. 14

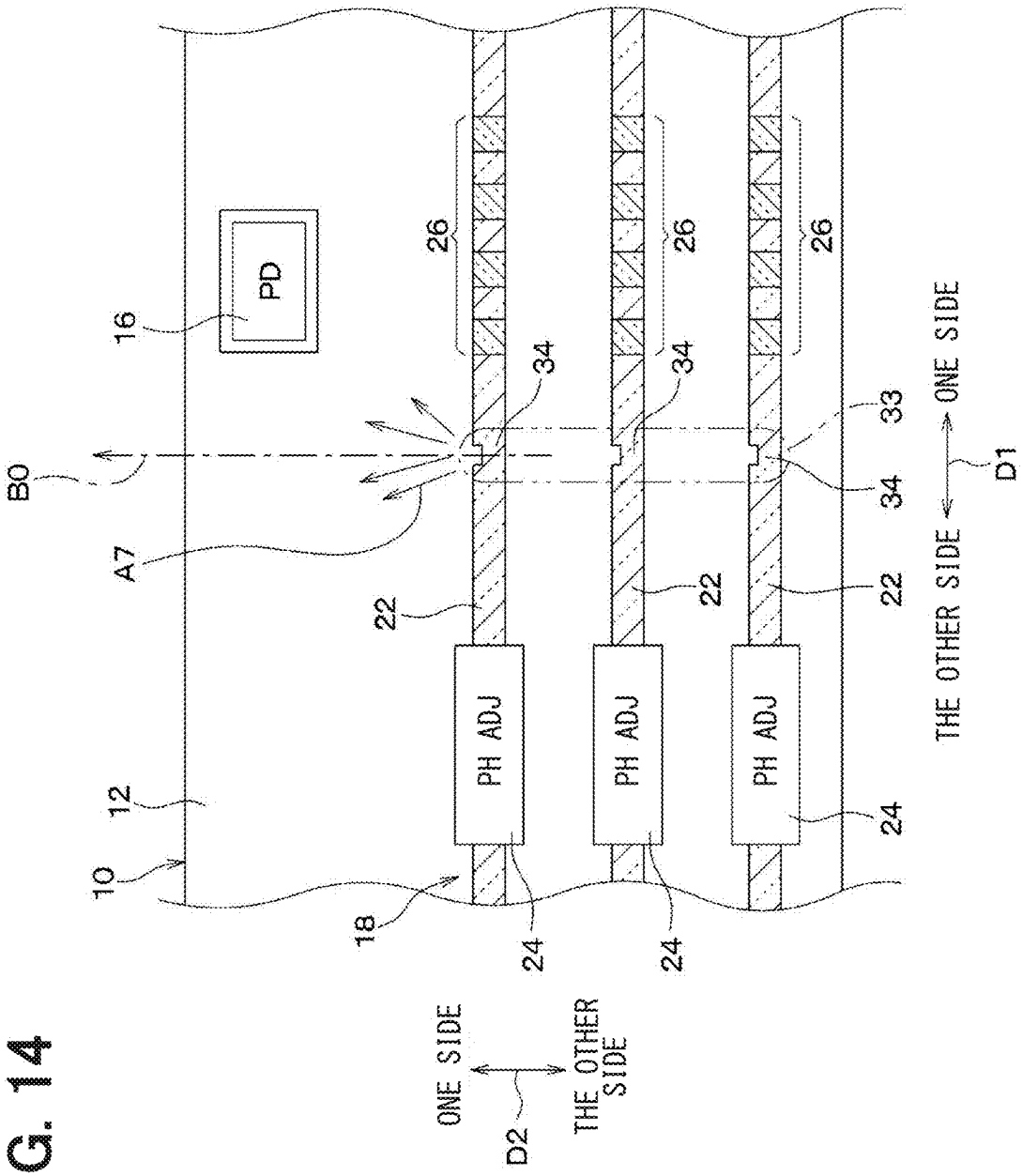
PD
16
B0
A7
26
34
22
PH ADJ
12
10
18
24
33
ONE SIDE
THE OTHER SIDE
D1
D2

FIG. 15

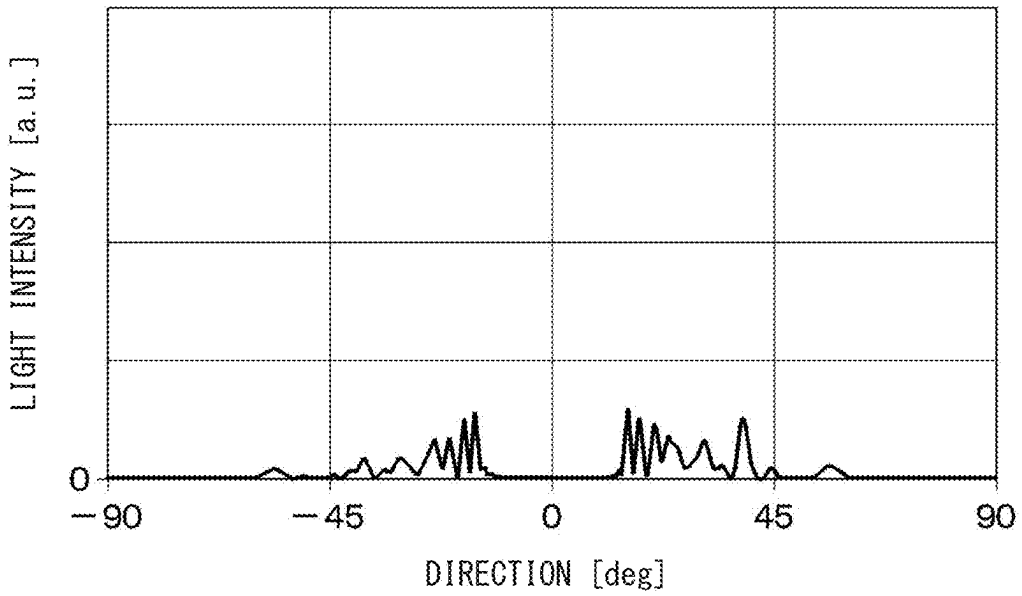

FIG. 16

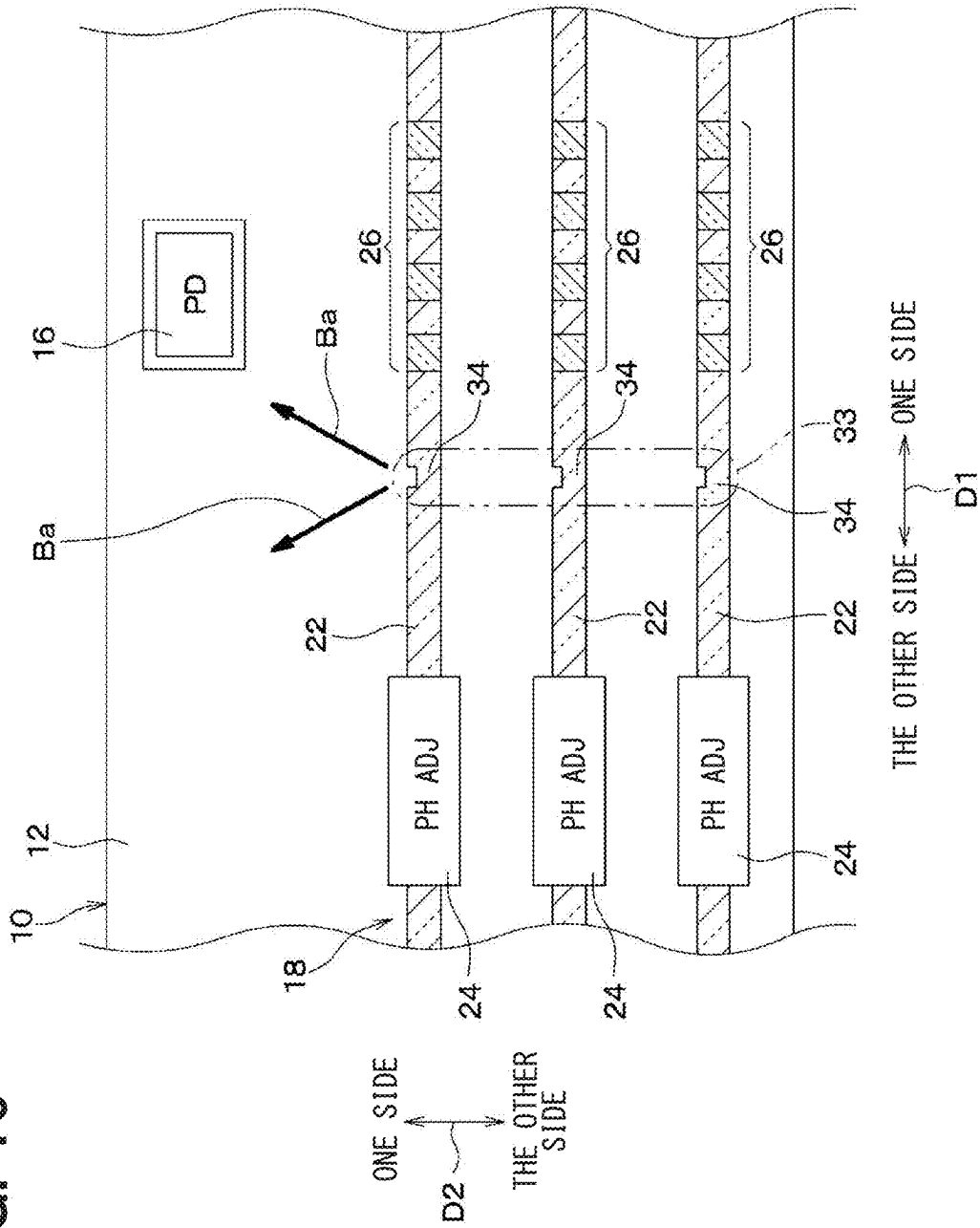
10
12
16
PD
18
Ba
Ba
26
26
26
34
34
34
33
22
22
22
PH ADJ
PH ADJ
PH ADJ
24
24
24
ONE SIDE
THE OTHER SIDE
D1
ONE SIDE
THE OTHER SIDE
D2

FIG. 17

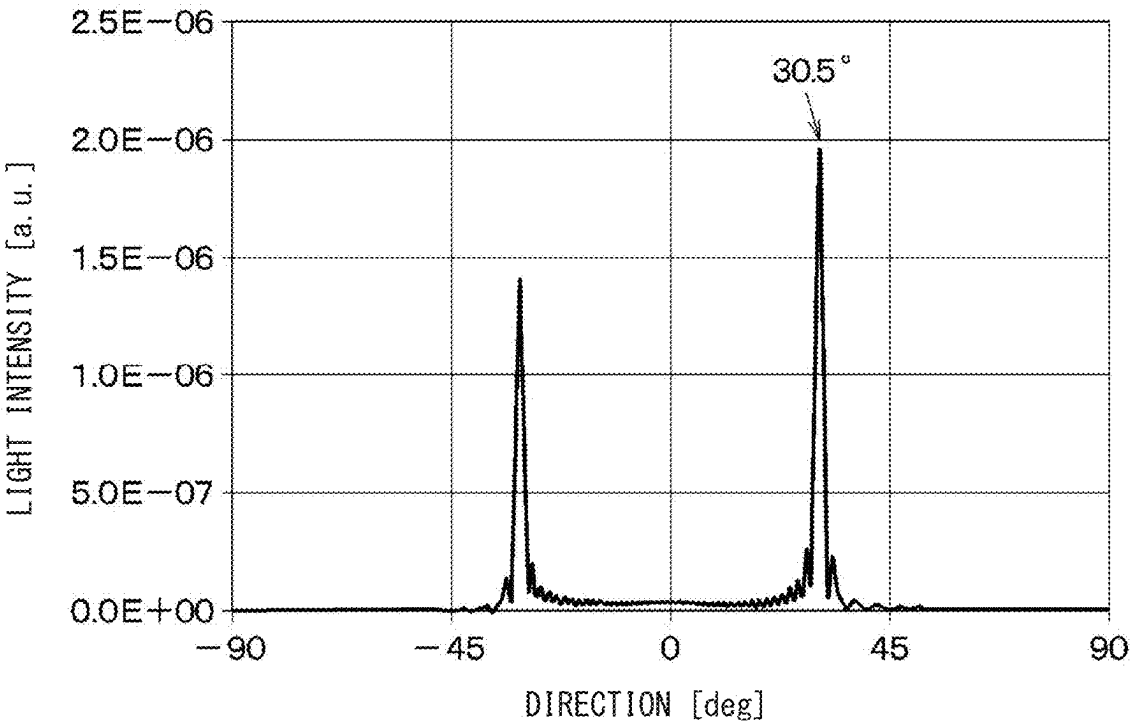
2.5E−06
2.0E−06
1.5E−06
1.0E−06
5.0E−07
0.0E+00
LIGHT INTENSITY [a.u.]
30.5°
−90
−45
0
45
90
DIRECTION [deg]

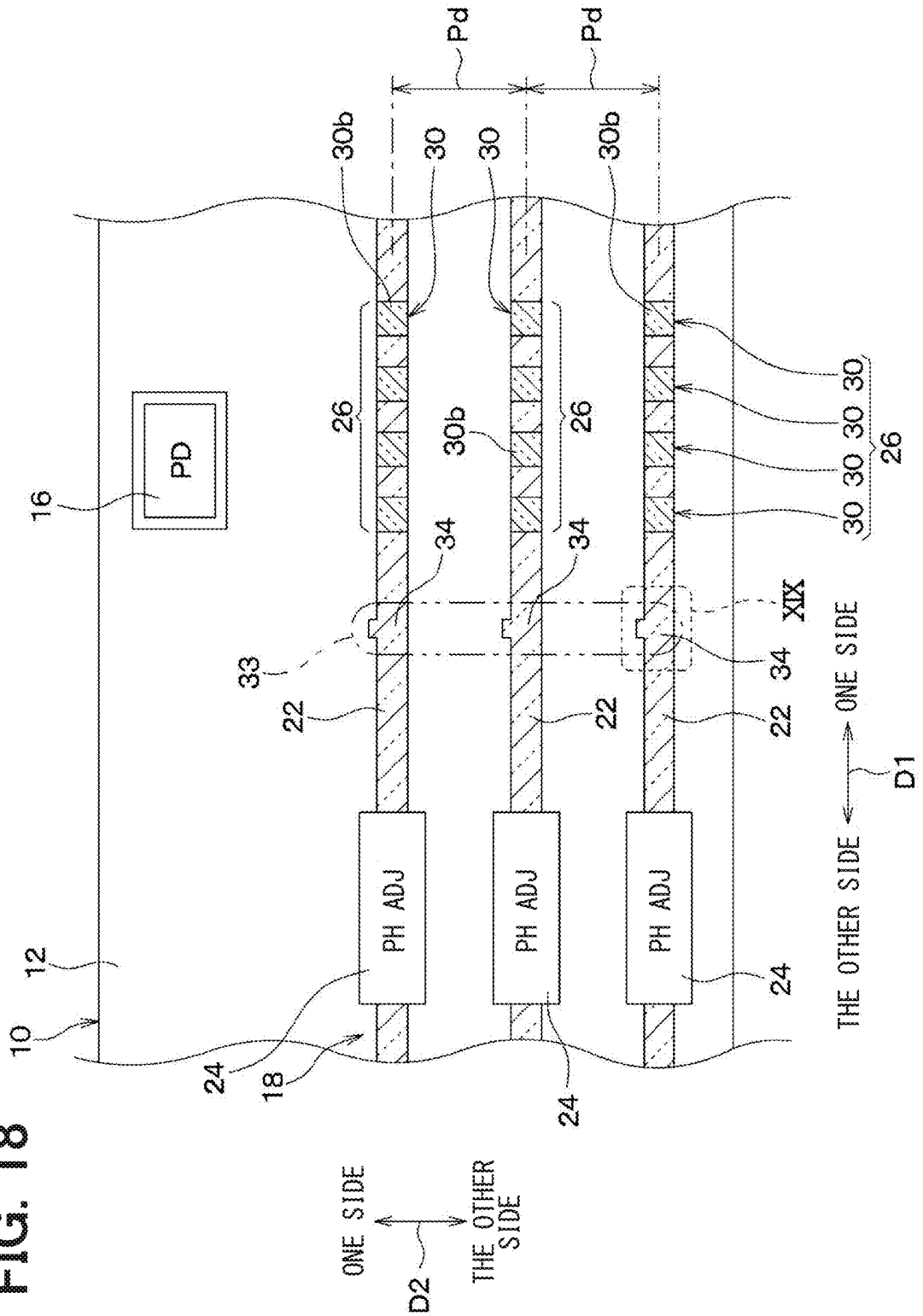
Pd
Pd
30b
30
30
30b
30
30
30
30
26
26
26
PD
16
30b
34
34
34
XIX
33
22
22
22
PH ADJ
PH ADJ
PH ADJ
24
24
24
12
10
18
ONE SIDE
THE OTHER SIDE
D1
ONE SIDE
THE OTHER SIDE
D2

FIG. 18

FIG. 19

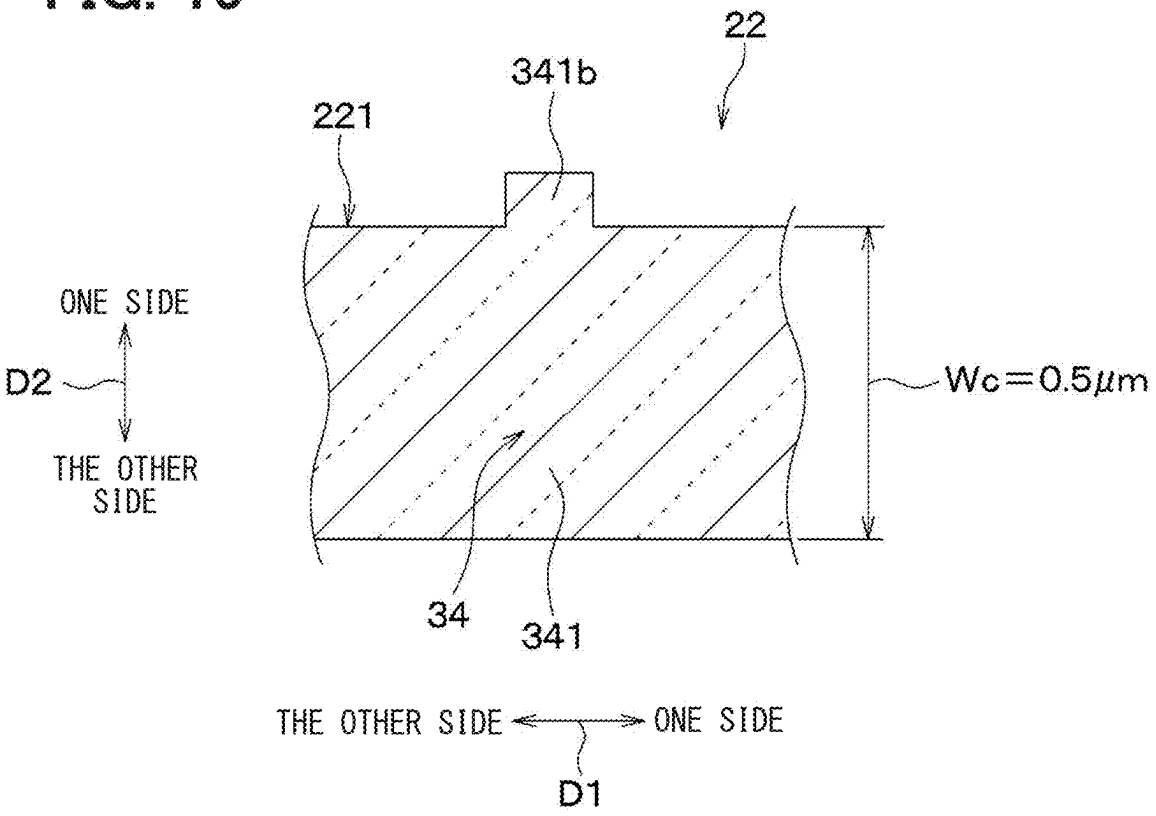
22
341b
221
ONE SIDE
D2
THE OTHER SIDE
Wc=0.5μm
34
341
THE OTHER SIDE
ONE SIDE
D1

FIG. 20

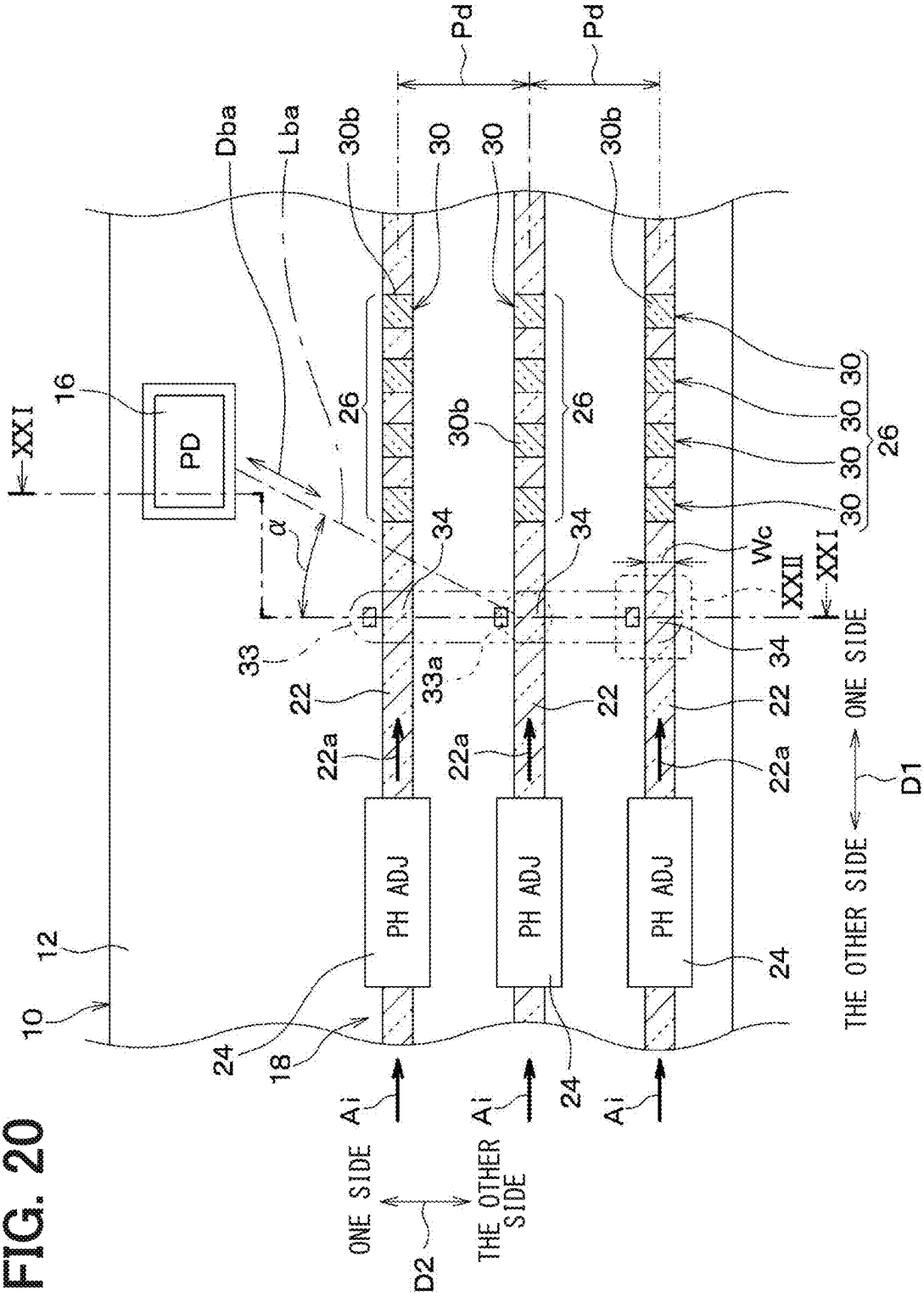
Pd
Pd
Dba
Lba
30b
30
30
30b
16
PD
XXI
26
30b
26
30
30
30
30
26
α
34
34
Wc
XXII
XXI
33
33a
34
22
22
22
22a
22a
22a
PH ADJ
PH ADJ
PH ADJ
24
24
24
12
10
18
Ai
Ai
Ai
ONE SIDE
THE OTHER SIDE
D2
ONE SIDE
THE OTHER SIDE
D1

FIG. 21

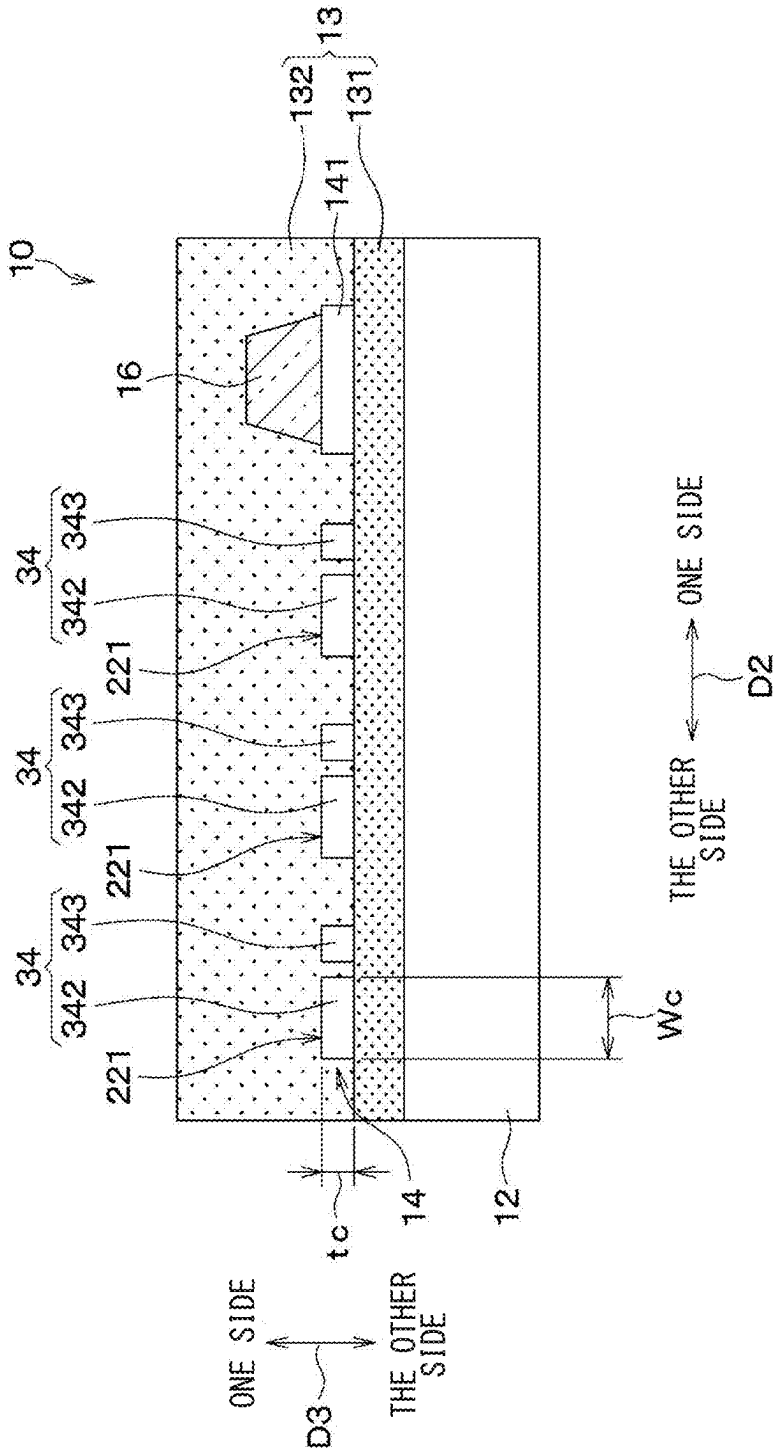
10
16
132
13
131
141
34
343
342
221
34
343
342
221
34
343
342
221
ONE SIDE
THE OTHER SIDE
D2
Wc
12
14
tc
ONE SIDE
THE OTHER SIDE
D3

FIG. 22

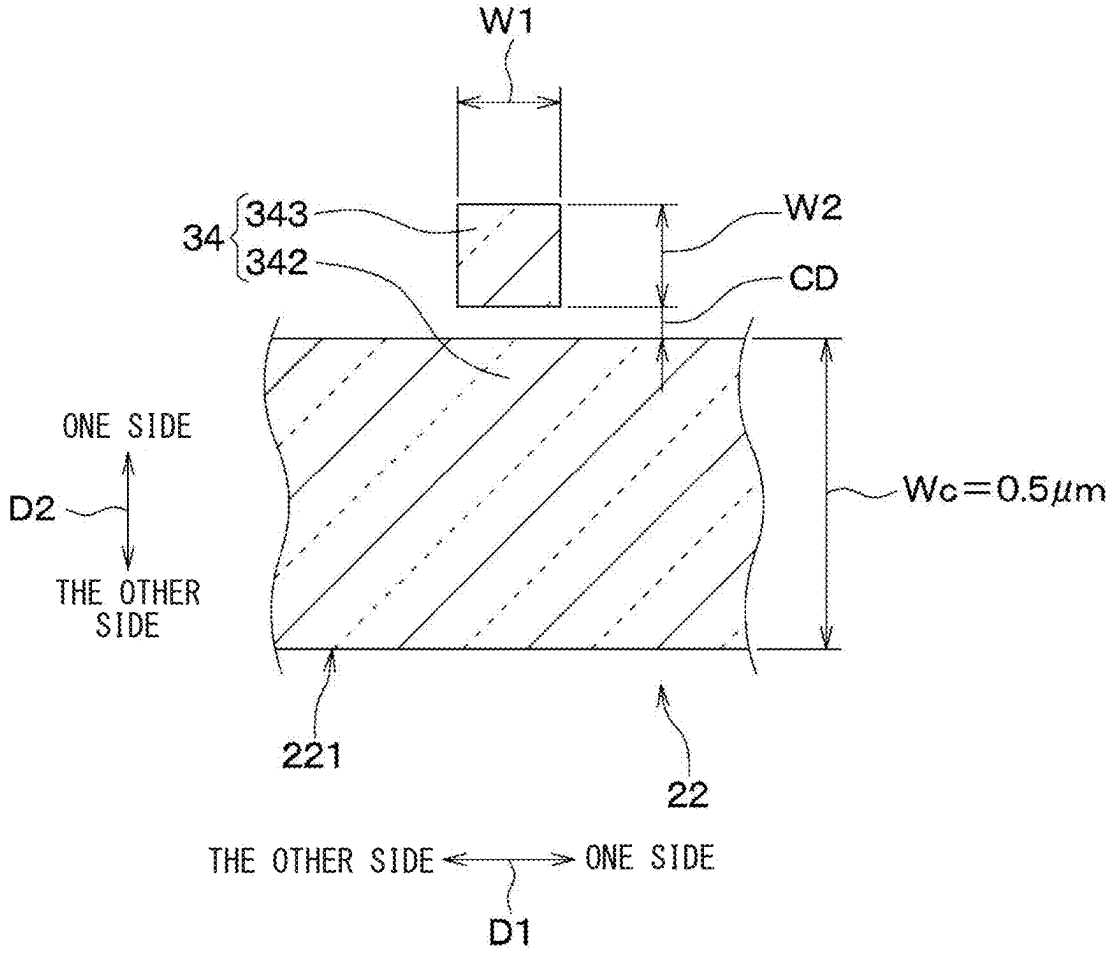
W1
34
343
342
W2
CD
ONE SIDE
D2
THE OTHER SIDE
Wc=0.5μm
221
22
THE OTHER SIDE
ONE SIDE
D1

FIG. 23

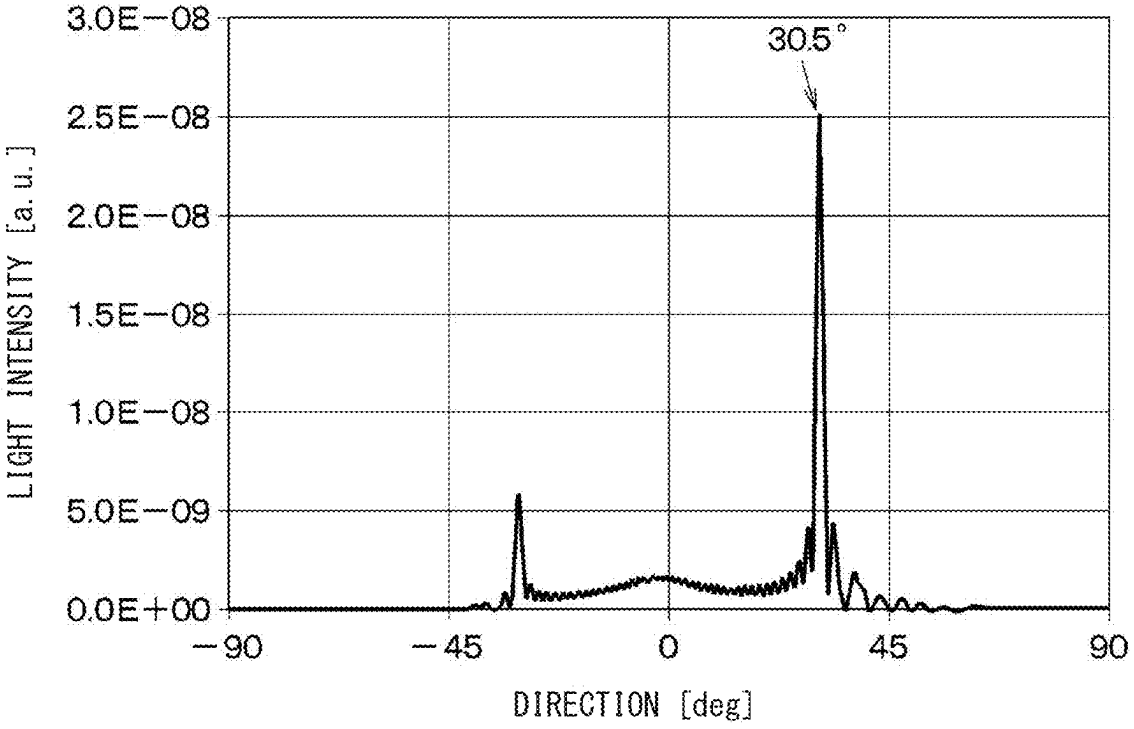
3.0E−08
2.5E−08
2.0E−08
1.5E−08
1.0E−08
5.0E−09
0.0E+00
LIGHT INTENSITY [a.u.]
30.5°
−90
−45
0
45
90
DIRECTION [deg]

FIG. 24

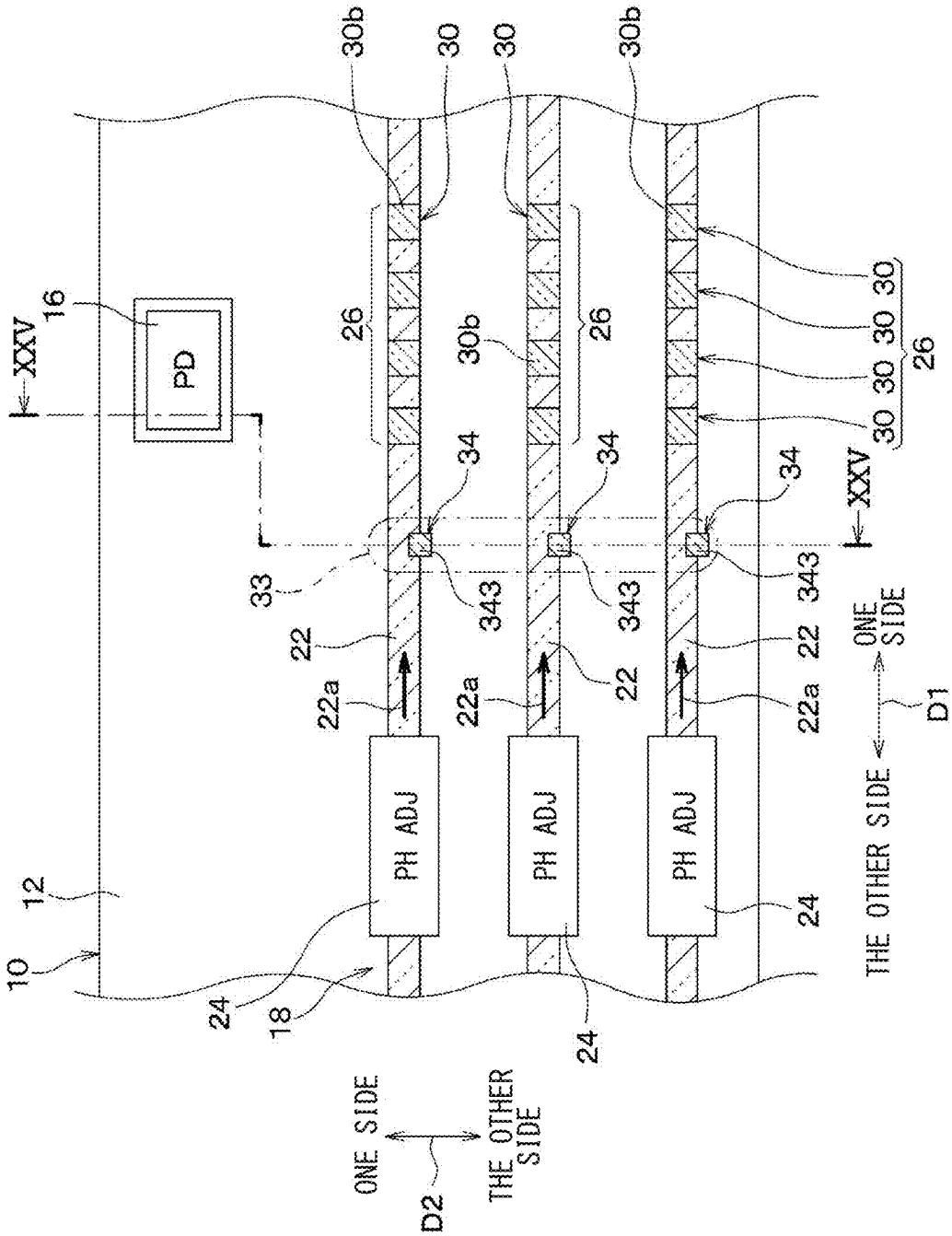
XXV
16
PD
10
12
18
24
PH ADJ
22a
22
33
26
30b
30
34
343
ONE SIDE
THE OTHER SIDE
D1
D2

FIG. 25

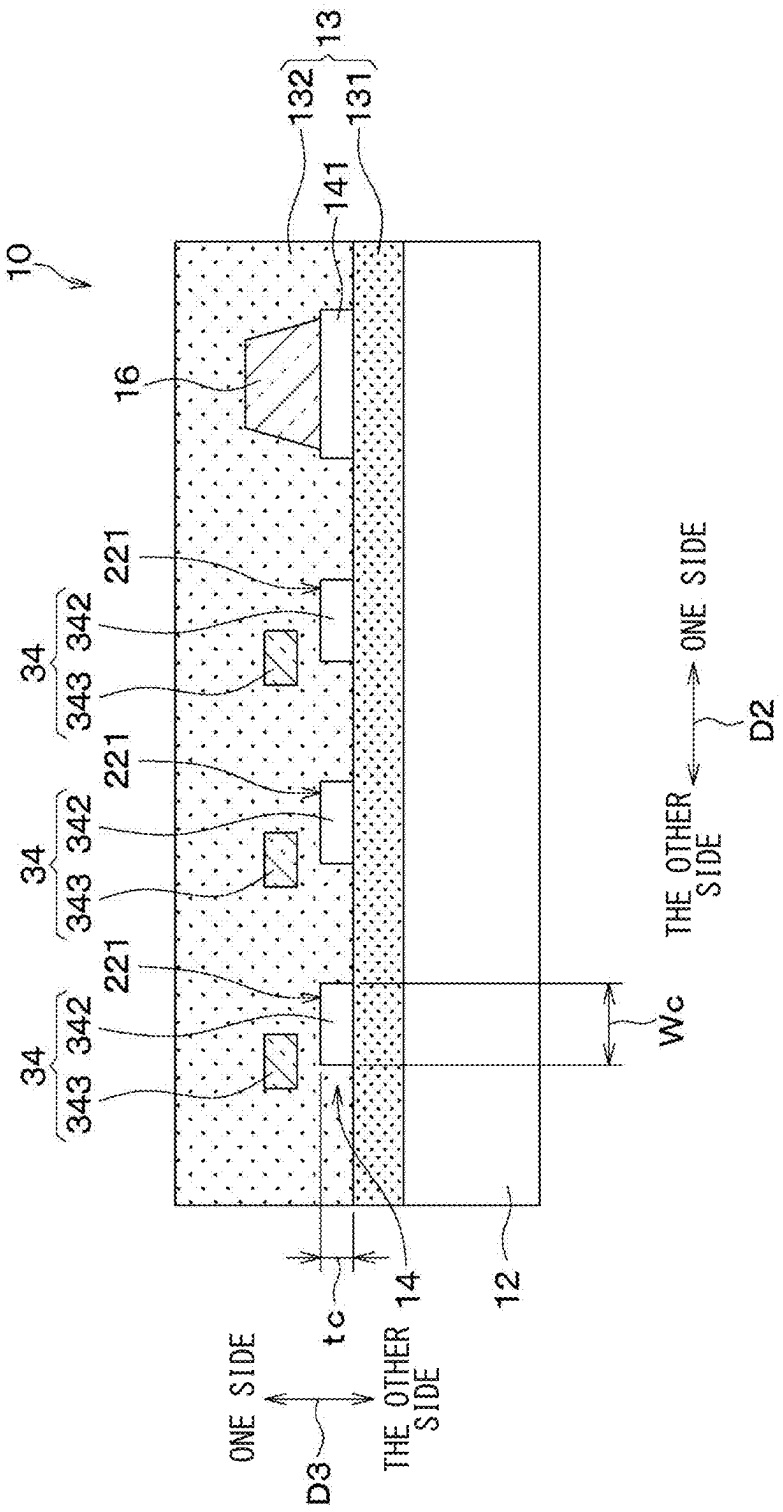
10
13
132
131
141
16
221
342
343
34
221
342
343
34
221
342
343
34
ONE SIDE
D2
THE OTHER SIDE
Wc
ONE SIDE
D3
THE OTHER SIDE
tc
14
12

FIG. 26

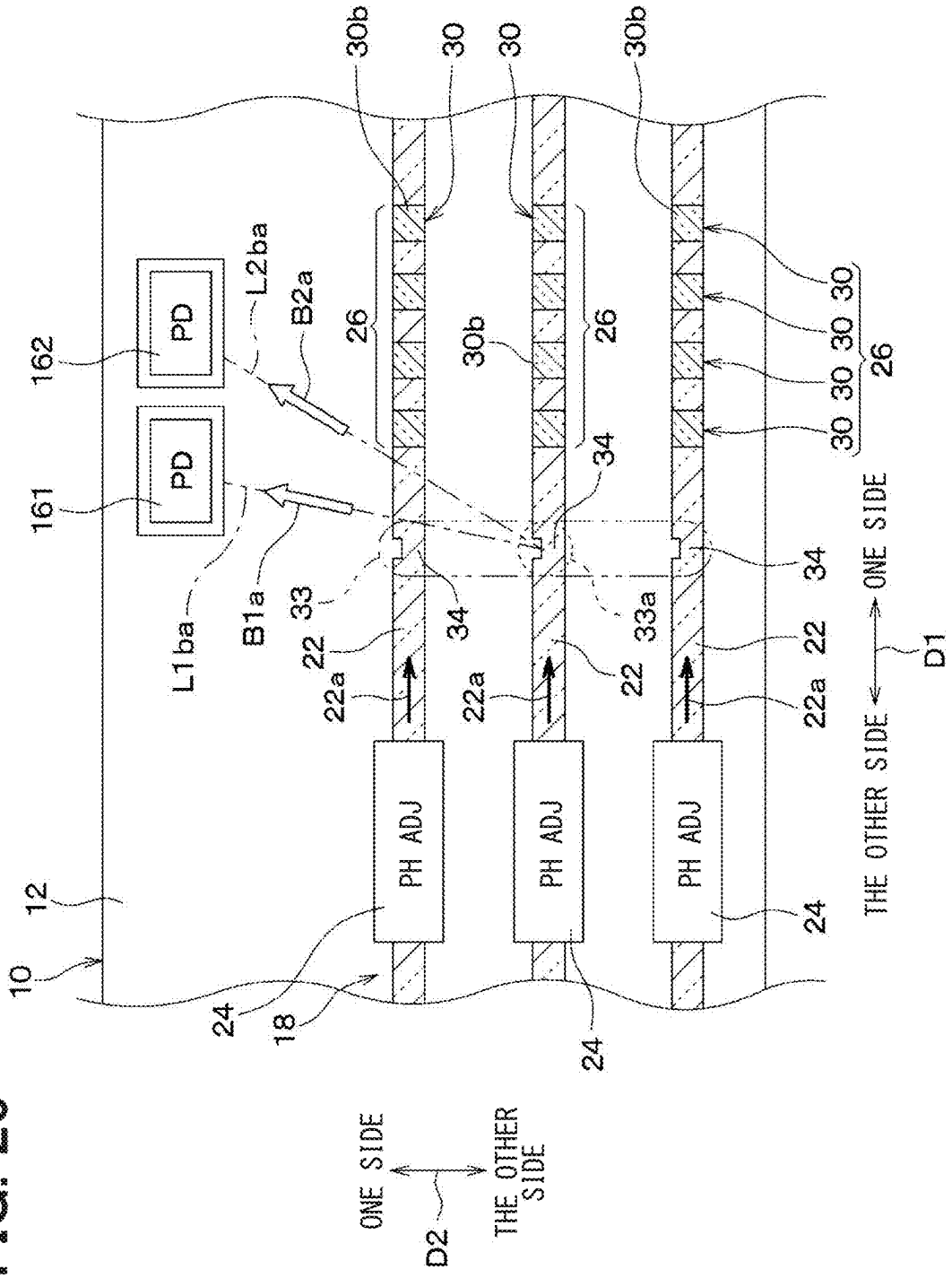
10
12
162
161
PD
PD
L2ba
B2a
L1ba
B1a
33
33a
34
34
34
22
22
22
22a
22a
22a
PH ADJ
PH ADJ
PH ADJ
24
24
24
18
26
26
26
30
30
30
30
30
30
30
30b
30b
30b
THE OTHER SIDE
ONE SIDE
D1
ONE SIDE
THE OTHER SIDE
D2

FIG. 27

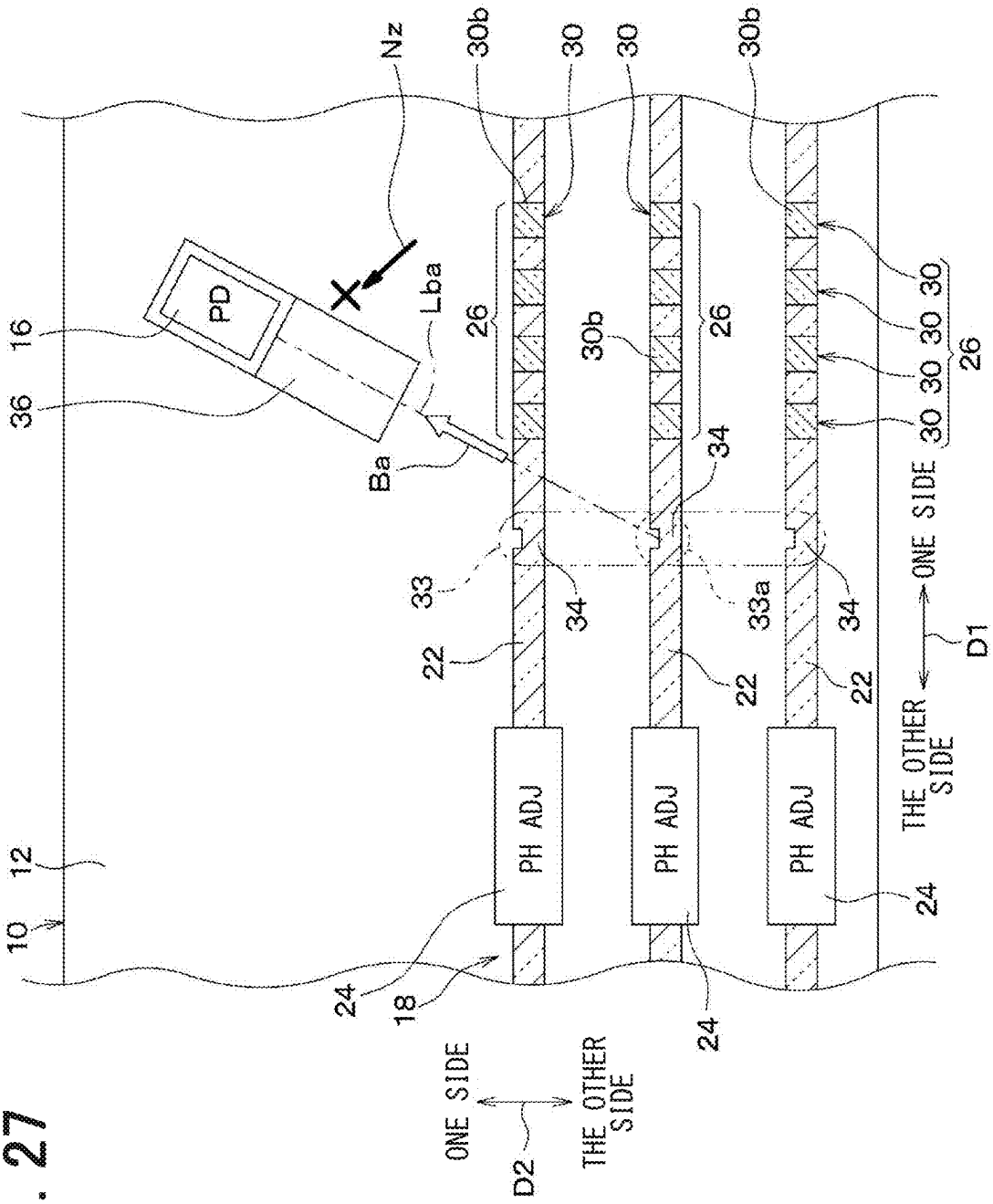
Nz
30b
30
30
30b
PD
16
36
Lba
Ba
26
30b
26
30
30
30
30
26
34
33
34
33a
34
22
22
22
ONE SIDE
D1
THE OTHER SIDE
PH ADJ
PH ADJ
PH ADJ
12
10
24
18
24
24
ONE SIDE
D2
THE OTHER SIDE

FIG. 28

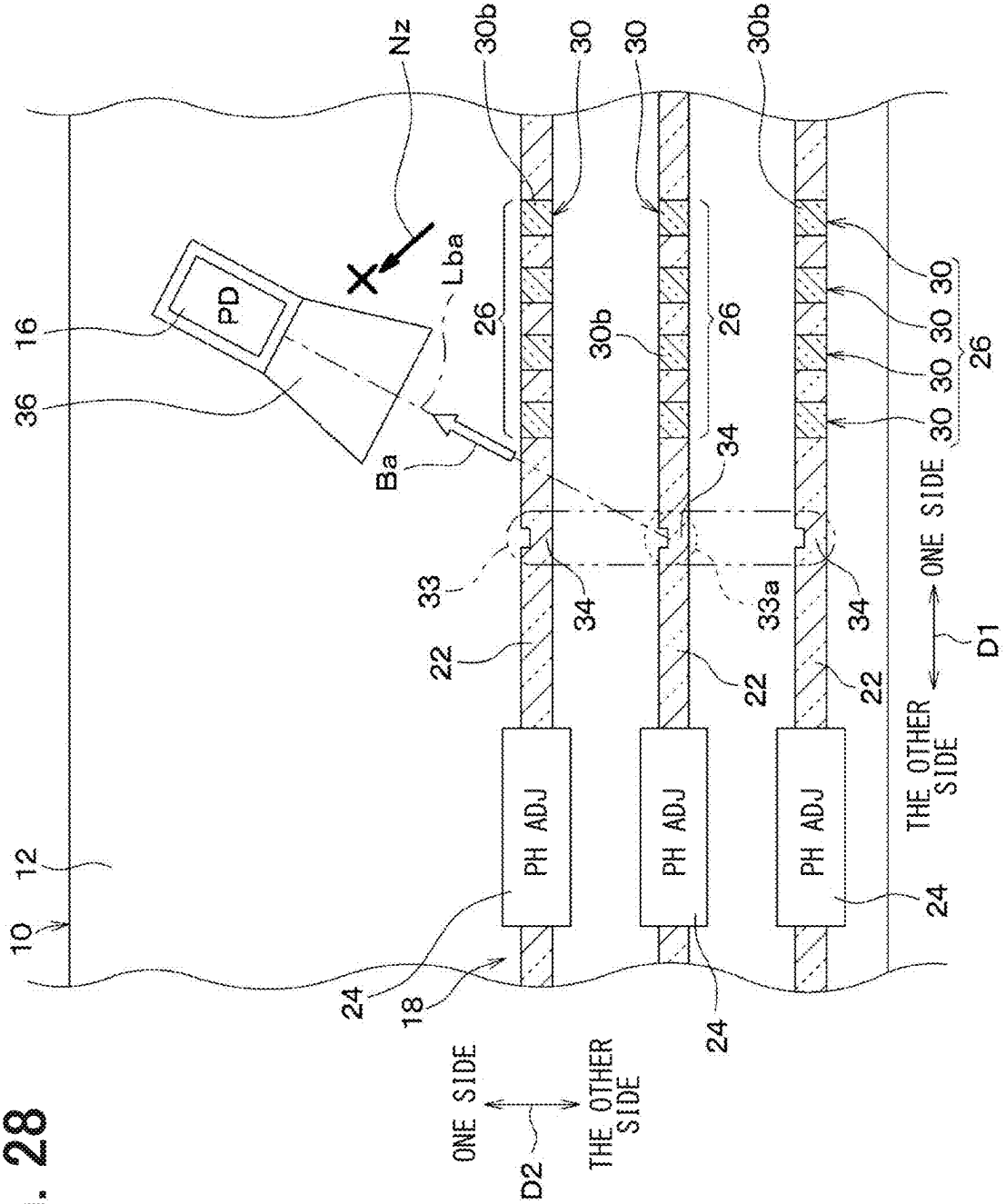
Nz
30b
30
30
30b
16
PD
36
Lba
Ba
26
30b
26
30
30
30
30
30
26
34
33
34
33a
34
22
22
22
ONE SIDE
D1
THE OTHER SIDE
PH ADJ
PH ADJ
PH ADJ
24
24
24
12
10
18
ONE SIDE
D2
THE OTHER SIDE

FIG. 29

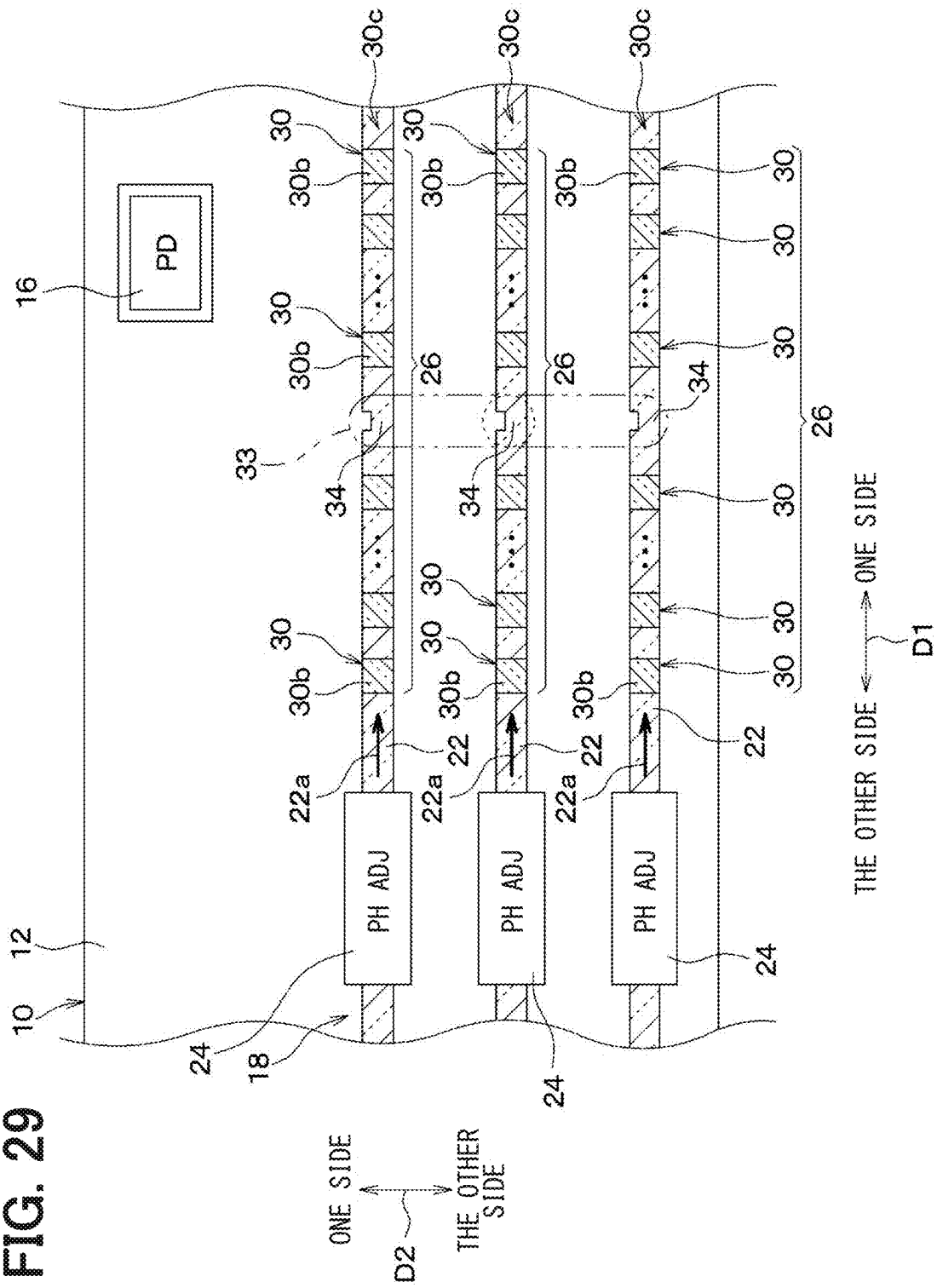
PD
16
12
10
18
24
PH ADJ
PH ADJ
PH ADJ
22a
22
30b
30
30c
26
33
34
ONE SIDE
THE OTHER SIDE
D1
ONE SIDE
THE OTHER SIDE
D2

FIG. 30

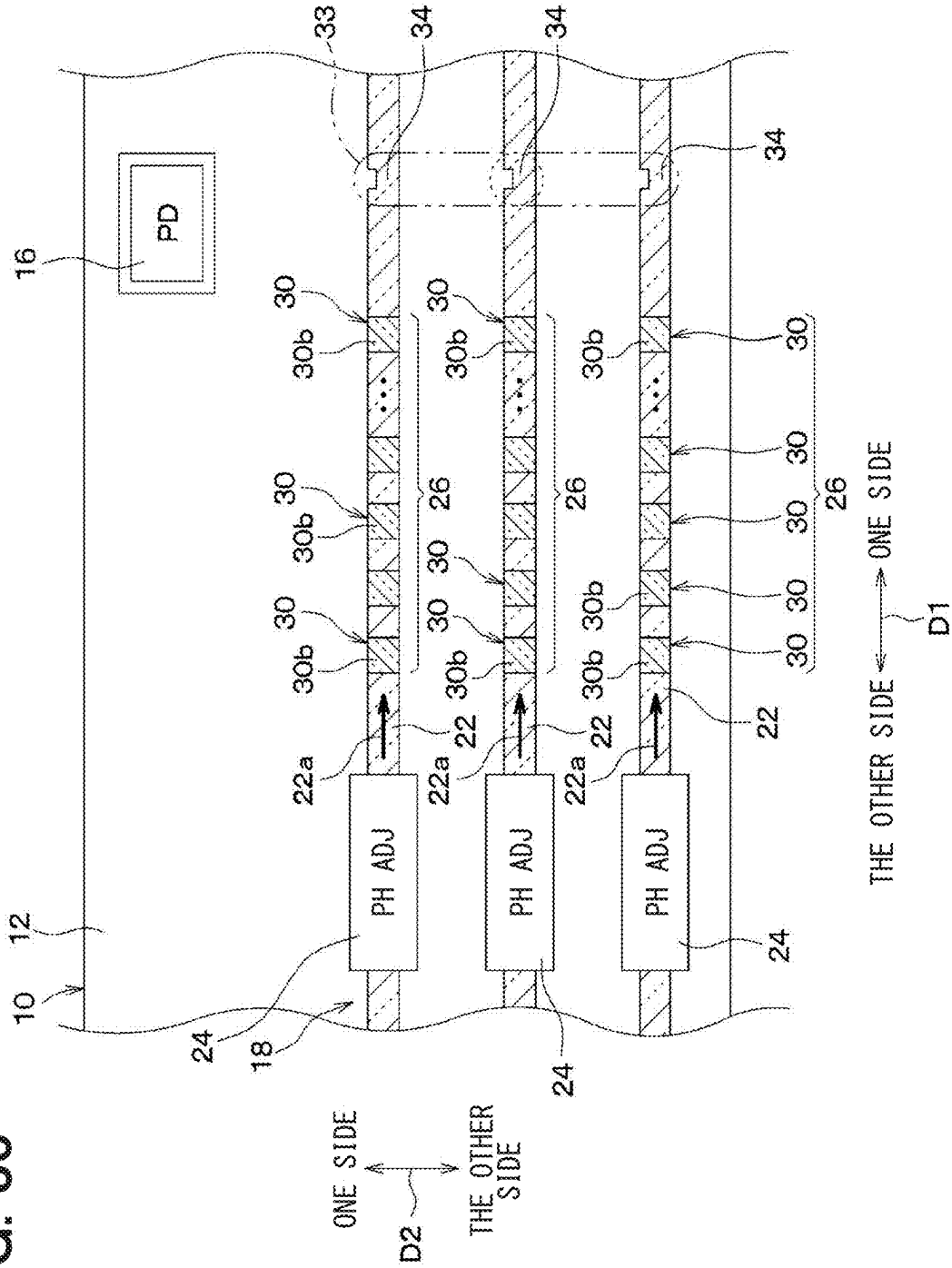
PD
16
33
34
34
34
30
30b
26
22a
22
PH ADJ
24
18
12
10
THE OTHER SIDE
ONE SIDE
D1
ONE SIDE
THE OTHER SIDE
D2

FIG. 31

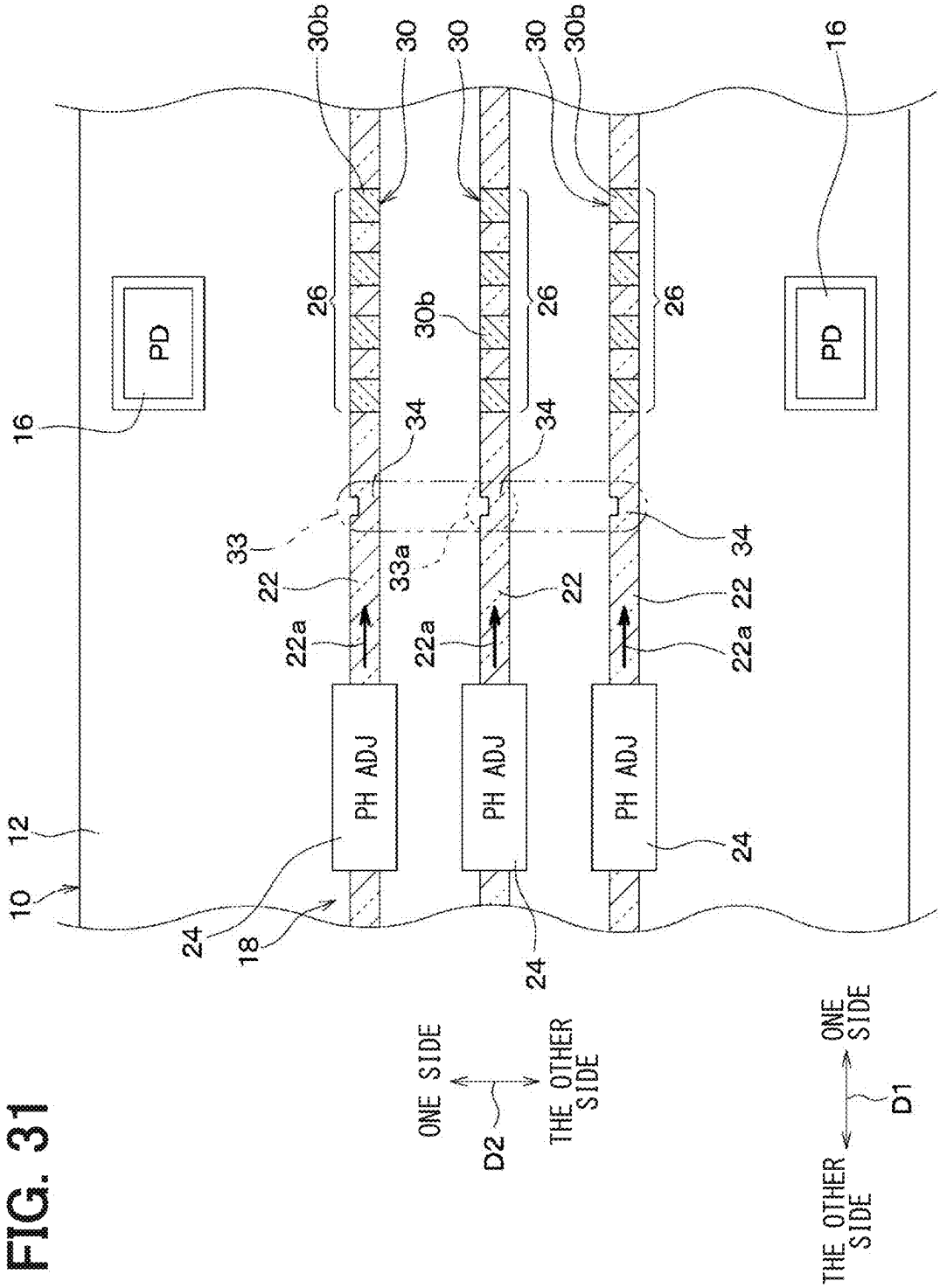
PD
PD
16
16
12
10
18
24
24
24
PH ADJ
PH ADJ
PH ADJ
22a
22a
22a
22
22
22
33
33a
34
34
34
26
26
26
30b
30
30
30
30b
ONE SIDE
THE OTHER SIDE
D2
ONE SIDE
THE OTHER SIDE
D1

OPTICAL WAVEGUIDE STRUCTURE

CROSS REFERENCE TO RELATED APPLICATION

[0001] The present application claims the benefit of priority from Japanese Patent Application No. 2024-031380 filed on Mar. 1, 2024. The entire disclosure of the above application is incorporated herein by reference.

TECHNICAL FIELD

[0002] The present disclosure relates to an optical waveguide structure including a plurality of waveguides.

BACKGROUND

[0003] There has been known a phase measurement device that acquires lights emitted from a plurality of waveguides and measures a phase variation that occurs in the waveguides.

SUMMARY

[0004] The present disclosure provides an optical waveguide structure including a substrate, a plurality of waveguides, a plurality of phase adjusters, a plurality of optical antenna units, a plurality of light emitting portions, and a photoelectric converter. The waveguides are disposed on the substrate, extend in a first direction, and are arranged at a uniform pitch in a second direction that is perpendicular to the first direction. The phase adjusters, the optical antenna units, and the light emitting portions are respectively disposed on the waveguides on the substrate. The light emitting portions are configured to emit a part of respective lights that have passed through the phase adjusters and propagate through the waveguides as emitted lights in a direction different from a direction in which the optical antenna units emit the respective lights from the waveguides. The photoelectric converter is disposed on the substrate, and is disposed on one side, the other side, or both sides in the second direction with respect to all of the light emitting portions. A position of the photoelectric converter is set so that an emitted beam formed by the emitted lights from the light emitting portions is incident on the photoelectric converter when phases of the emitted lights are matched with each other.

BRIEF DESCRIPTION OF DRAWINGS

[0005] Objects, features and advantages of the present disclosure will become apparent from the following detailed description made with reference to the accompanying drawings. In the drawings:

[0006] FIG. **1** is a conceptual diagram illustrating a schematic configuration of a general optical phased array;

[0007] FIG. **2** is a schematic diagram illustrating a configuration of a first reference example in a state in which phases of guided lights propagating through a plurality of waveguides vary and are not matched;

[0008] FIG. **3** is a diagram showing a distribution of light intensities of emitted lights with respect to a direction from optical antenna units of an optical phased array in the state shown in FIG. **2**;

[0009] FIG. **4** is a schematic diagram illustrating the configuration of the first reference example in a state in which the phases of the guided lights propagating through the plurality of waveguides are matched;

[0010] FIG. **5** is a diagram showing a distribution of light intensities of emitted lights with respect to a direction from optical antenna units of an optical phased array in the state shown in FIG. **4**;

[0011] FIG. **6** is a first diagram illustrating a schematic configuration of a second reference example using a conceptual diagram similar to that of FIG. **1**;

[0012] FIG. **7** is a second diagram illustrating a schematic configuration of the second reference example, which is a top view in which a portion VII in FIG. **6** is extracted and the number of waveguides is reduced;

[0013] FIG. **8** is a perspective view schematically illustrating optical antenna units disposed on waveguides in the second reference example and a first embodiment;

[0014] FIG. **9** is a conceptual diagram showing a schematic configuration of an optical waveguide structure according to the first embodiment;

[0015] FIG. **10** is a diagram illustrating a portion X in FIG. **9** and is a top view illustrating a part of an optical phased array and a photoelectric converter disposed on a substrate in the optical waveguide structure according to the first embodiment;

[0016] FIG. **11** is a cross-sectional view taken along line XI-XI in FIG. **10** in the first embodiment;

[0017] FIG. **12** is an enlarged cross-sectional view illustrating a portion XII in FIG. **10** in the first embodiment;

[0018] FIG. **13** is a cross-sectional view taken along line XIII-XIII in FIG. **10** in the first embodiment;

[0019] FIG. **14** is a top view similar to FIG. **10**, illustrating a state in which phases of emitted lights emitted from respective light emitting portions of the optical phased array vary and are not matched;

[0020] FIG. **15** is a light intensity distribution diagram showing the relationship between a direction from a center of a light emitting portion group in a planar view along a third direction and a light intensity of the emitted lights in the state shown in FIG. **14**;

[0021] FIG. **16** is a top view similar to FIG. **10**, illustrating a state in which the phases of the emitted lights emitted from the respective light emitting portions of the optical phased array are matched;

[0022] FIG. **17** is a light intensity distribution diagram showing the relationship between the direction from the center of the light emitting portion group in the planar view and the light intensity of the emitted lights in the state shown in FIG. **16**;

[0023] FIG. **18** is a top view illustrating a part of an optical phased array and a photoelectric converter disposed on a substrate in an optical waveguide structure according to a second embodiment;

[0024] FIG. **19** is an enlarged cross-sectional view illustrating a portion XIX in FIG. **18** in the second embodiment;

[0025] FIG. **20** is a top view illustrating a part of an optical phased array and a photoelectric converter disposed on a substrate in an optical waveguide structure according to a third embodiment;

[0026] FIG. **21** is a cross-sectional view taken along line XXI-XXI in FIG. **20** in the third embodiment;

[0027] FIG. **22** is an enlarged cross-sectional view illustrating a portion XXII in FIG. **20** in the third embodiment;

[0028] FIG. **23** is a light intensity distribution diagram showing the relationship between the direction from the

center of the light emitting portion group in the planar view and the light intensity of the emitted lights in the state in which the phases of the emitted lights emitted from the respective light emitting portions are matched;

[0029] FIG. **24** is a top view illustrating a part of an optical phased array and a photoelectric converter disposed on a substrate in an optical waveguide structure according to a fourth embodiment;

[0030] FIG. **25** is a cross-sectional view taken along line XXV-XXV in FIG. **24** in the fourth embodiment;

[0031] FIG. **26** is a top view illustrating a part of an optical phased array and photoelectric converters disposed on a substrate in an optical waveguide structure according to a fifth embodiment;

[0032] FIG. **27** is a top view illustrating a part of an optical phased array and a photoelectric converter disposed on a substrate in an optical waveguide structure according to a sixth embodiment;

[0033] FIG. **28** is a top view illustrating a part of an optical phased array and a photoelectric converter disposed on a substrate in an optical waveguide structure according to a seventh embodiment;

[0034] FIG. **29** is a top view illustrating a part of an optical phased array and a photoelectric converter disposed on a substrate in an optical waveguide structure according to an eighth embodiment;

[0035] FIG. **30** is a top view illustrating a part of an optical phased array and a photoelectric converters disposed on a substrate in an optical waveguide structure according to a ninth embodiment; and

[0036] FIG. **31** is a top view illustrating a part of an optical phased array and photoelectric converters disposed on a substrate in an optical waveguide structure according to another embodiment.

DETAILED DESCRIPTION

[0037] Next, a relevant technology is described only for understanding the following embodiments. In an optical phased array composed of a plurality of waveguides, phases of guided lights propagating through the waveguides vary due to processing errors during manufacturing, component variations, and other factors. Therefore, it is necessary to perform a correction for restricting the phase variation of the guided lights in the waveguides. In order to perform correction to restrict the phase variation of the guided lights, it is conceivable to use a phase measurement device.

[0038] The phase measurement device acquires emitted lights emitted from the waveguides and measures the phase variation that occurs in the waveguides. The phase measurement device may include a camera, separate from the optical phased array, as an emitted light acquisition unit that acquires the emitted lights emitted from the optical phased array, and may calculate the phase variation that occurs in the waveguides based on image information obtained from the camera.

[0039] However, the phase measurement device described above requires the camera for acquiring the emitted lights in addition to a chip including the optical phased array, which makes the device as a whole large and complex. Therefore, it is considered preferable to equip a chip with an optical phased array with a function of acquiring guided lights from waveguides included in the optical phased array.

[0040] In order to enable a chip with an optical phased array to acquire guided lights from waveguides, it is conceivable to provide light-coupling waveguides for acquiring the guided lights, which are optically coupled to each waveguide, between the waveguides of the optical phased array. However, this configuration has the following disadvantages. In the above-described configuration, the light-coupling waveguides and various elements connected to the light-coupling waveguides are disposed between the waveguides that propagate the guided lights, resulting in limitations on the reduction of the pitch between the waveguides. Consequently, if the reduction of the pitch between the waveguides is limited, a scanning range of a beam formed by the emitted lights from the optical phased array is also limited. As a result of detailed studies by the present inventors, the above findings were discovered.

[0041] An optical waveguide structure according to an aspect of the present disclosure includes a substrate, a plurality of waveguides, a plurality of phase adjusters, a plurality of optical antenna units, a plurality of light emitting portions, and a photoelectric converter. The waveguides are disposed on the substrate, extend in a first direction, are arranged at a uniform pitch in a second direction that is perpendicular to the first direction, and are configured to propagate respective lights. The phase adjusters are respectively disposed on the waveguides on the substrate, and are configured to control phases of the respective lights propagating through the waveguides. The optical antenna units are respectively disposed on the waveguides on the substrate, and are configured to emit the respective lights that have passed through the phase adjusters and propagate through the waveguides in an antenna unit emitting direction. The light emitting portions are respectively disposed on the waveguides on the substrate, and are configured to emit a part of the respective lights that have passed through the phase adjusters and propagate through the waveguides as emitted lights in a direction different from the antenna unit emitting direction. The photoelectric converter is disposed on the substrate, is disposed on one side, the other side, or both sides in the second direction with respect to all of the light emitting portions, and is configured to output an electrical signal corresponding to an intensity of a light incident on the photoelectric converter. A position of the photoelectric converter is set so that an emitted beam formed by the emitted lights from the light emitting portions is incident on the photoelectric converter when phases of the emitted lights are matched with each other.

[0042] In this way, a part of the lights propagating through the waveguides are emitted as the emitted lights from the light emitting portions, and when the phases of the emitted lights are matched with each other, the emitted beam formed by the emitted lights is incident on the photoelectric converter. Therefore, the photoelectric converter can provide a function of acquiring the lights propagating through the waveguides in order to perform correction for restricting the phase variation of the lights. Since the photoelectric converter is disposed on the same substrate as the waveguides, it is possible to provide a chip having the waveguides with the function of acquiring the lights propagating through the waveguides.

[0043] Furthermore, since the photoelectric converter is disposed on the one side, the other side, or both sides in the second direction with respect to all of the of light emitting portions, the arrangement of the waveguides is not hindered from narrowing the pitch. For example, compared to a case where various elements such as photoelectric converters are

disposed between waveguides that propagate guided lights, it can be said that the arrangement of the waveguides is less likely to be hindered from having a narrow pitch.

Explanation of Optical Phased Array

[0044] Since an optical waveguide structure **10** described in each embodiment below includes an optical phased array, a general optical phased array **70** will be described. The optical phased array may be abbreviated as OPA.

[0045] As shown in FIG. **1**, the optical phased array **70** is a device capable of controlling a direction and a shape of a beam BM emitted from the optical phased array **70** without using a mechanical mechanism. The optical phased array **70** includes a light incident unit (LT IN) **71**, a light distribution unit (LT DIST) **72** connected to the light incident unit **71**, a plurality of waveguides **73** connected to the light distribution unit **72** and arranged in parallel with each other, a plurality of phase adjusters (PH ADJ) **74**, and a plurality of optical antenna units **75**. The phase adjusters **74** are respectively disposed midway on the waveguides **73**, and configured to adjust phases of respective guided lights propagating through the waveguides **73**. The optical antenna units **75** are respectively disposed at end portions of the waveguides **73** and configured to respectively emit the guided lights from the waveguides **73**.

[0046] The light incident unit **71**, the light distribution unit **72**, the plurality of waveguides **73**, the plurality of phase adjusters **74**, and the plurality of optical antenna units **75** are formed, for example, by being laminated on a silicon (Si) substrate (not shown).

[0047] For example, a light emitted from a light source (LTS) **76** such as an infrared laser light source is incident on the light incident unit **71** of the optical phased array **70**, and the incident light is distributed to the waveguides **73** by the light distribution unit **72**. The phases of guided lights, which are lights distributed by the light distribution unit **72** and propagate through the respective waveguides **73**, are respectively adjusted by the phase adjusters **74**, and the guided lights after the phase adjustment travel in the waveguides **73** toward the optical antenna units **75** and are emitted from the optical antenna units **75** to the outside of the optical phased array **70**.

[0048] The optical phased array **70** can form the beam BM from light waves WB emitted from the optical antenna units **75** in any direction by regularly controlling the phases of the guided lights propagating through the waveguides **73** with the phase adjusters **74**.

[0049] For example, if the phases of the guided lights are not controlled at all by the phase adjusters **74** and the guided lights are emitted from the optical antenna units **75**, a concentrated beam BM is not formed as shown in FIG. **2** and FIG. **3**. This is because the phases of the guided lights propagating through the waveguides vary irregularly due to processing errors and component variations during the manufacture of the optical phased array **70**. An arrow A**0** in FIG. **2** and FIG. **4** described later indicates a direction of 0 degrees indicated on the horizontal axis in FIG. **3** and FIG. **5** described later.

[0050] Therefore, as a prerequisite for using the optical phased array **70**, phase correction is required to eliminate variations in initial phases of the guided lights caused by processing errors, component variations, and the like during the manufacture of the optical phased array **70**. The initial phases of the guided lights are the phases of the guided lights before being adjusted by the phase adjusters **74**. When the phase correction is performed and the phases of the emitted lights respectively emitted from the optical antenna units **75** are matched, a single unified beam BM is formed in the direction of 0 degrees, as shown in FIG. **4** and FIG. **5**.

[0051] For example, as a configuration for performing the phase correction, a first reference example described below can be considered. In the first reference example, as shown in FIG. **2** and FIG. **4**, an infrared camera **77** is provided separately from a chip including the optical phased array **70**. The infrared camera **77** is disposed at a direction of 0 degrees relative to the optical phased array **70** and is configured so as to be able to detect the emitted lights from the optical antenna units **75** from the direction of 0 degrees. Then, while the emitted lights from the optical antenna units **75** are monitored by the infrared camera **77**, the phases of the guided lights are adjusted by the respective phase adjusters **74** so that the light intensity P**0** at the direction of 0 degrees is maximized, as shown in FIG. **5**. As a result of this adjustment, as shown in FIG. **4**, one beam BM is formed in the direction of 0 degrees, completing the phase correction.

[0052] In the above-described first reference example, although it is possible to perform the phase correction, it is necessary to provide the infrared camera **77** separately from the chip including the optical phased array **70**, and therefore the entire device performing the phase correction becomes large-scale. Therefore, there is a demand for a technique that can monitor the phases of the guided lights in the respective waveguides **73** within the chip including the optical phased array **70**. As a technique that meets this demand, the following second reference example can be considered.

[0053] In the second reference example, as shown in FIG. **6** and FIG. **7**, guided light acquiring units **80**, relay waveguides **81**, and photodiodes (PD) **82** are respectively provided between the waveguides **73** of the optical phased array **70**. The guided light acquiring units **80**, the relay waveguides **81**, the photodiodes **82**, and the optical phased array **70** are formed on a common Si substrate **83**. Light is incident on each of the waveguides **73** of the optical phased array **70** from the light distribution unit **72** as indicated by arrows Ai.

[0054] In FIG. **7** and FIG. **8** described later, only core portions of the waveguides **73** are shown, and a cladding layer around the core portions is omitted. The method of omitting the cladding layer is also used for illustrating the relay waveguides **81** and optical coupled waveguides **801** described below.

[0055] Each of the guided light acquiring units **80** includes a pair of optical coupled waveguides **801**, a pair of reflectors (REF) **802**, and a multiplexer (MPX) **803**. The pair of optical coupled waveguides **801** are disposed so as to be optically coupled to one and the other of a pair of waveguides **73** that sandwich the guided light acquiring unit **80**. Therefore, portions of the guided lights that pass through the phase adjusters **74** in the pair of waveguides **73** and immediately before reaching the optical antenna units **75** move from the pair of waveguides **73** to the optical coupled waveguide **801** as indicated by arrows A**1**.

[0056] The guided lights transferred to the optical coupled waveguide **801** are reflected by the reflector **802** as indicated by arrows A**2**, and are multiplexed by the multiplexer **803** as indicated by arrows A**3**. Furthermore, the light multiplexed by the multiplexer **803** is input from the multiplexer **803** to the photodiode **82** through the relay waveguide **81** as indicated by an arrow A**4**. In phase correction of the guided

lights, phases of the guided lights are adjusted by the respective phase adjusters **74** so that outputs of the respective photodiodes **82**, which correspond to light intensities of the lights input to the respective photodiode **82**, become maximum at the respective photodiodes **82**. As a result of this adjustment, one beam BM is formed in the direction of 0 degrees as shown by a solid line in FIG. **6**, and the phase correction is completed.

[0057] In the second reference example, since the guided light acquiring units **80** and the like are disposed between the waveguides **73** as shown in FIG. **7**, a pitch P**1** of the waveguides **73** is larger than the size of the guided light acquiring unit **80**. Since the guided light acquiring unit **80** includes the reflectors **802** and the multiplexer **803**, the size of the guided light acquiring unit **80** is large.

[0058] Therefore, in the second reference example, the guided light acquiring unit **80** hinders narrowing of the pitch P**1** of the waveguides **73**. In other words, the second reference example has a disadvantage that the narrowing of the pitch of the waveguides **73** is limited. A beam scanning range θ in which the beam BM can be scanned becomes wider as the pitch of the optical antenna units **75**, which is the same as the pitch P**1** of the waveguides **73**, becomes smaller. Therefore, in the second reference example in which the narrowing of the pitch of the waveguides **73** is limited, the beam scanning range θ is limited due to the guided light acquiring units **80** and the like disposed between the waveguides **73**.

[0059] Note that, the beam BM indicated by two-dot chain lines in FIG. **6** represent the beam BM scanned in a direction other than the direction of 0 degrees. In addition, in FIG. **7**, for the sake of simplicity, the number of waveguides **73** shown in FIG. **6** is reduced to three.

[0060] As shown in FIG. **8**, the optical antenna unit **75** in the second reference example has a plurality of light exit sections **30** arranged along each of the waveguides **73** so that light is output from the waveguides **73**. Each of the light exit sections **30** is composed of a first light exit component **30***a* that constitutes a part of the core portion of the waveguide **73** in the longitudinal direction of the waveguide **73**, and a second light exit component **30***b* that is a diffraction grating adjacent to the first light exit component **30***a*.

[0061] Therefore, the first light exit component **30***a* and the second light exit component **30***b* form a pair to constitute the light exit section **30**, and the second light exit components **30***b* are arranged along the waveguide **73** in which the light exit sections **30** to which they belong are provided. In detail, each of the second light exit components **30***b* is disposed adjacent to the first light exit component **30***a* so as to diffract and emit the light that has leaked out from the first light exit component **30***a*. Therefore, the guided light propagating in the waveguide **73** as indicated by an arrow A**5** is emitted from each of the light exit sections **30** to the outside of the waveguide **73** as indicated by an arrow A**6**. Therefore, the direction of 0 degrees is on the front side of the paper in FIG. **7**.

[0062] The first light exit components **30***a* may be made of, for example, Si, and the second light exit components **30***b*, which are diffraction gratings, may be made of, for example, silicon nitride (SIN). In FIG. **7**, the waveguides **73**, **801**, and **81** and the second light exit components **30***b* are hatched for ease of understanding. The longitudinal direction of the waveguides **73** coincide with the first direction D**1** in FIG. **7** and FIG. **8**.

[0063] An optical waveguide structure **10** including an optical phased array **18** of each embodiment described below in the present disclosure is configured in consideration of the above-described disadvantage of the second reference example in that narrowing the pitch of the waveguides **73** is limited.

[0064] Hereinafter, embodiments will be described with reference to the drawings. In the following embodiments, identical or equivalent elements are denoted by the same reference numerals as each other in the drawings.

First Embodiment

[0065] As shown in FIG. **9** and FIG. **10**, an optical waveguide structure **10** of the present embodiment includes a substrate **12**, a photoelectric converter (PD) **16**, an optical phased array **18**, and the like. The photoelectric converter **16** and optical phased array **18** are formed on the substrate **12** by silicon photonics technology, and the optical waveguide structure **10** is configured as a single optical integrated chip.

[0066] In the description of the present embodiment, a first direction D**1**, a second direction D**2**, and a third direction D**3** shown in FIGS. **9** to **11** may be used to indicate directions in the optical waveguide structure **10**. The first direction D**1**, the second direction D**2**, and the third direction D**3** intersect with each other, or more precisely, are perpendicular to each other. In addition, in FIG. **10** and subsequent figures corresponding to FIG. **10**, a cladding layer **13** shown in FIG. **11**, for example, is omitted, and therefore a plurality of waveguides **22** of the optical phased array **18** are illustrated only by core portions **221** included in the waveguides **22**.

[0067] The substrate **12** is made of, for example, silicon (Si), and is formed in a rectangular plate shape extending in the first direction D**1** and the second direction D**2**. The photoelectric converter **16** and the optical phased array **18** are formed on the substrate **12**. In other words, the photoelectric converter **16** and the optical phased array **18** are arranged on one side of the substrate **12** in the third direction D**3** and are configured to be integrated with the substrate **12**.

[0068] Specifically, the optical waveguide structure **10** has a laminated structure, which includes the substrate **12**, a lower cladding layer **131**, an upper cladding layer **132**, and a core layer **14**, as shown in FIG. **11**. The lower cladding layer **131** and the upper cladding layer **132** are made of, for example, silicon oxide (SiO_2), and the core layer **14** is made of, for example, Si. Therefore, for example, the waveguides **22** included in the optical phased array **18** are made of the same material.

[0069] In the laminated structure of the optical waveguide structure **10**, the lower cladding layer **131** is laminated on the one side of the substrate **12** in the third direction D**3**, and the core layer **14** is laminated on one side of a portion of the lower cladding layer **131** in the third direction D**3**. In addition, the upper cladding layer **132** is laminated on one side of the lower cladding layer **131** in the third direction D**3**, and is also laminated on one side of the core layer **14** in the third direction D**3** so as to sandwich the core layer **14** between the upper cladding layer **132** and the lower cladding layer **131**. In the description of the present embodiment, the lower cladding layer **131** and the upper cladding layer **132** may be collectively referred to as the cladding layer **13**.

[0070] As shown in FIG. **9** and FIG. **10**, the optical phased array **18** includes a light incident unit (LT IN) **19**, a light distribution unit (LT DIST) **20**, the plurality of waveguides

22, a plurality of phase adjusters (PH ADJ) **24**, a plurality of optical antenna units (OPT ANT) **26**, and a plurality of light emitting portions **34**.

[0071] The light incident unit **19**, the light distribution unit **20**, and the plurality of waveguides **22** are formed by the core layer **14** and a portion of the cladding layer **13** surrounding the core layer **14** in FIG. **11**. For example, as shown in FIG. **11**, each of the plurality of waveguides **22** includes the core portion **221** that is formed corresponding to each of the waveguides **22** within the core layer **14**, and a cladding portion **222** surrounding the core portion **221** within the cladding layer **13**.

[0072] As shown in FIGS. **9** to **11**, the light incident unit **19** is a portion of the optical phased array **18** on which a light emitted from a light source (LTS) **76**, such as an infrared laser light source, is incident. The light distribution unit **20** is disposed on one side of the light incident unit **19** in the first direction D**1**, and is disposed on the other side in the first direction D**1** with respect to each of the plurality of waveguides **22**. In short, the light distribution unit **20** is disposed between the light incident unit **19** and the plurality of waveguides **22**. The light incident unit **19** and the plurality of waveguides **22** are each connected to the light distribution unit **20**. Due to this connection relationship, the light distribution unit **20** distributes the incident light incident on the light incident unit **19** to each of the plurality of waveguides **22** as indicated by arrows Ai.

[0073] Each of the waveguides **22** propagates the light incident from the light distribution unit **20**. The light propagating through each of the waveguides **22** may be referred to as a guided light **22***a*. Each of the waveguides **22** extends in the first direction D**1**. In detail, each of the waveguides **22** extends linearly along the first direction D**1** in parallel with one another. For example, in the present embodiment, the waveguides **22** are formed to have the same shape.

[0074] A cross-sectional shape of the core portion **221** of the waveguide **22** in a cross section perpendicular to the first direction D**1**, for example, a cross-sectional shape of the core portion **221** shown in FIG. **11**, is rectangular. For example, a thickness dimension tc in the third direction D**3** of the cross-sectional shape of the core portion **221** is "tc=0.21 μm", and a width dimension Wc in the second direction D**2** is "Wc=0.5 μm" except for a core width changed portion **341** described later.

[0075] The waveguides **22** are arranged at a uniform pitch Pd in the second direction D**2**. In other words, the pitch Pd of the waveguides **22** is uniform, and intervals between any of the waveguides **22** are the same. For example, the pitch Pd of the waveguide **22** in the present embodiment is set to "Pd=1.5 μm".

[0076] The phase adjusters **24** are respectively disposed on the waveguides **22** on the substrate **12**. In detail, the phase adjusters **24** are provided one for each waveguide **22**. Therefore, the optical phased array **18** has the same number of phase adjusters **24** as the waveguides **22**.

[0077] Each of the phase adjusters **24** controls the phase of the guided light **22***a* propagating through the waveguide **22** in which each of the phase adjuster **24** is disposed. For example, the phase adjuster **24** changes a refractive index of a material constituting a adjusted portion of the waveguide **22** on which the phase adjuster **24** is disposed, by using an electro-optical effect or a thermo-optical effect, and changes the phase of the guided light **22***a* passing through the adjusted portion due to the change in refractive index.

[0078] When the phase adjuster **24** is configured to utilize the electro-optic effect, the phase adjuster **24** has a pair of electrodes arranged on either side of the waveguide **22**, and the phase of the guided light **22***a* is changed by applying a voltage between the pair of electrodes. In addition, when the phase adjuster **24** is configured to utilize the thermo-optical effect, the phase adjuster **24** has a heater that can heat the adjusted portion of the waveguide **22** by passing an electric current through it, and the phase of the guided light **22***a* is changed by heating the adjusted portion by the heater.

[0079] The optical antenna units **26** are respectively disposed on the waveguides **22** on the substrate **12**. In detail, the optical antenna units **26** are provided one for each of the waveguides **22**. Therefore, the optical phased array **18** has the same number of optical antenna units **26** as the waveguides **22**.

[0080] Each of the optical antenna units **26** emits the guided light **22***a* propagating through the waveguide **22** in which each of the optical antenna unit **26** is disposed, from that waveguide **22**. In detail, the optical antenna unit **26** is arranged on the opposite side of the phase adjuster **24** from the light distribution unit **20**, in other words, on the one side of the first direction D**1** from the phase adjuster **24**, so that the guided light **22***a* that has passed through the phase adjuster **24** and propagates through the waveguide **22** is emitted from the waveguide **22**.

[0081] Specifically, each of the optical antenna units **26** is configured as shown in FIG. **8** and FIG. **10**. In other words, in the present embodiment, as in the second reference example described above, each of the optical antenna units **26** has a plurality of light exit sections **30** arranged along each of the waveguides **22** and emits light from each of the waveguides **22**.

[0082] Each of the light exit sections **30** includes a first light exit component **30***a* that constitutes a portion of the core portion **221** of the waveguide **22** in the first direction D**1**, and a second light exit component **30***b* that is a diffraction grating adjacent to the first light exit component **30***a*. The second light exit component **30***b* is made of, for example, silicon nitride (SIN). As shown in FIG. **8**, FIG. **10**, and FIG. **11**, the second light exit component **30***b* is disposed on the one side in the third direction D**3** with respect to the first light exit component **30***a*, and is included in the upper cladding layer **132**.

[0083] Therefore, the first light exit component **30***a* and the second light exit component **30***b* form a pair to constitute the light exit section **30**, and the second light exit components **30***b* are arranged along the waveguide **22** in which the light exit sections **30** to which they belong are provided. In detail, each of the second light exit components **30***b* is disposed adjacent to one side of the first light exit component **30***a* in the third direction D**3** so as to diffract and emit the light that has leaked out from the first light exit component **30***a*. In other words, each of the second light exit components **30***b* is disposed adjacent to the first light exit component **30***a* so as to emit the guided light **22***a* from the first light exit component **30***a* to the outside of the waveguide **22**.

[0084] Therefore, the guided light **22***a* propagating through the waveguide **22** is emitted to the outside from each of the light exit sections **30** as indicated by the arrow A**6** in FIG. **8**. In other words, in the present embodiment, an antenna unit emitting direction Dan, which is a direction in which the optical antenna unit **26** emits the guided light **22***a*

propagating through the waveguide **22** to the outside, is a direction along the third direction D**3** as shown in FIG. **11**. In FIG. **10** and subsequent figures corresponding to FIG. **10**, the waveguides **22** and the second light exit components **30***b* are hatched for ease of understanding.

[0085] The light emitting portions **34** are respectively disposed on the waveguides **22** on the substrate **12**. In detail, the light emitting portions **34** are provided one for each of the waveguides **22**. Therefore, the optical phased array **18** has the same number of optical emitting portions **34** as the waveguides **22**. In the description of the present embodiment, all of the light emitting portions **34** of the optical phased array **18** may be collectively referred to as a light emitting portion group **33**. For example, the light emitting portions **34** are disposed at positions that are aligned with each other in the first direction D**1**.

[0086] Each of the light emitting portions **34** is disposed between the phase adjuster **24** and the optical antenna unit **26**. With this arrangement, the light emitting portion **34** emits a part of the guided light **22***a*, which has passed through the phase adjuster **24** and propagates through the waveguide **22**, from the waveguide **22** in a direction different from the antenna unit emitting direction Dan in FIG. **11** before the guided light **22***a* reaches the optical antenna unit **26**. For example, in the present embodiment, each of the light emitting portions **34** emits a part of the guided light **22***a* as an emitted light from each of the light emitting portions **34** to one side and the other side in the second direction D**2**.

[0087] Specifically, as shown in FIG. **10**, FIG. **12**, and FIG. **13**, each of the waveguides **22** has the core width changed portion **341** in which the width dimension Wc, which is the core width of the core portion **221** of the waveguide **22** in the second direction D**2**, is locally changed. In the present embodiment, the core width of the core portion **221** of the waveguide **22** is locally narrowed at the core width changed portion **341**. Each of the light emitting portions **34** is formed by the core width changed portion **341**.

[0088] In detail, the core width changed portion **341** of the waveguide **22** has a groove **341***a* formed so as to be cut into the core portion **221** from the one side in the second direction D**2** and extend through to the third direction D**3**. By forming the groove **341***a*, the width dimension Wc of the core portion **221** at the core width changed portion **341** is smaller than the width dimension Wc of the core portion **221** at a portion of the waveguide **22** adjacent to the core width changed portion **341**.

[0089] In the present embodiment, the groove **341***a* has a rectangular cross-sectional shape as shown in FIG. **12**, a groove width Wm of the groove **341***a* in the first direction D**1** is "Wm=0.1 μm", and a groove depth Hm of the groove **341***a* in the second direction D**2** is also "Hm=0.1 μm". The amount of light emitted from the light emitting portion **34** increases with increase in the size of the groove **341***a*. Thus, the amount of light emitted from the light emitting portion **34** is adjusted by the size of the groove **341***a*.

[0090] In the optical phased array **18** configured as described above, if the phases of the emitted lights, which are the guided lights **22***a* emitted from the light emitting portions **34**, are not matched, the emitted lights from the light emitting portions **34** will be dispersed as indicated by arrows A**7**, as shown in FIGS. **14** and **15**, and no beam will be formed. In contrast, when the phases of the emitted lights from the light emitting portions **34** are matched with each other, for example when the phases of the emitted lights are the same with each other, an emitted beam Ba composed of the emitted lights from the light emitting portions **34** is formed in a certain direction, as shown in FIG. **16** and FIG. **17**.

[0091] A direction of the emitted beam Ba, that is, a beam formation direction Dba (see FIG. **10**), varies depending on, for example, the wavelength of the guided lights **22***a* propagating through the waveguides **22**. The beam formation direction Dba, that is, the direction of the emitted beam Ba, is information necessary for determining the relative arrangement of the photoelectric converter **16** with respect to the light emitting portion group **33**, as will be described later. Therefore, in the present embodiment, the wavelength of the light emitted by the light source **76** is determined in advance, and the beam formation direction Dba is calculated by computer simulation.

[0092] In addition, in FIG. **16**, two emitted beams Ba traveling from the light emitting portion group **33** to the one side of the second direction D**2** are represented by arrows, but two emitted beams Ba are also formed on the other side of the second direction D**2** relative to the light emitting portion group **33**, similar to the one side. An arrow B**0** in FIG. **14** indicates the direction of 0 degrees shown on the horizontal axis in FIG. **15** and FIG. **17**.

[0093] For example, in the present embodiment, as shown in FIG. **10** and FIG. **17**, one of the emitted beams Ba is formed to be oriented along the beam axis Lba in FIG. **10** when viewed in a direction along the third direction D**3**. In other words, when viewed in the direction along the third direction D**3**, one of the emitted beams Ba is formed at an angle a of 30.5 degrees with respect to the second direction D**2** so as to be positioned on the one side of the first direction D**1** toward the one side of the second direction D**2** based on the center **33***a* of the light emitting portion group **33**.

[0094] Note that, the emitted lights emitted from the light emitting portion **34** disposed on each of the waveguides **22** passes through the other waveguides **22** arranged side by side with respect to the waveguide **22** from which the emitted lights are emitted, and proceed to the one side and the other side in the second direction D**2**. When the phases of the emitted lights emitted from the light emitting portions **34** are matched with each other, the emitted lights that have passed through the other waveguides **22** and the emitted lights that have not passed through the other waveguides **22** will combine to form the emitted beams Ba.

[0095] As shown in FIG. **10** and FIG. **13**, the photoelectric converter **16** is arranged on the one side in the second direction D**2** with respect to all of the waveguides **22** of the optical phased array **18**. In other words, the photoelectric converter **16** is arranged on the one side in the second direction D**2** with respect to all of the plurality of light emitting portions **34** of the optical phased array **18**.

[0096] The photoelectric converter **16** is a photodetector that outputs an electrical signal according to the intensity of light incident on the photoelectric converter **16**. The electrical signal output from the photoelectric converter **16** is guided to the outside of the optical waveguide structure **10** by a connection terminal (not shown) provided on the substrate **12**. The photoelectric converter **16** is laminated on the one side in the third direction D**3** with respect to a base portion **141** which is a part of the core layer **14**, and is surrounded by the base portion **141** and the upper cladding layer **132**. Specifically, the photoelectric converter **16** in the

present embodiment is a photodiode made of germanium (Ge). The output of the photoelectric converter **16** as an electrical signal increases with increase in the intensity of light incident on the photoelectric converter **16**.

[0097] As shown in FIG. **10**, the position of the photoelectric converter **16** is set so that the emitted beam Ba is incident on the photoelectric converter **16** when the phases of the emitted light emitted from the light emitting portions **34** are matched with each other. More specifically, since a plurality of emitted beams Ba are formed, the position of the photoelectric converter **16** is determined so that at least one of the plurality of emitted beams Ba is incident on the photoelectric converter **16**.

[0098] For example, in the present embodiment, one of the plurality of emitted beams Ba is formed so as to extend along a beam axis Lba in FIG. **10** when viewed in the direction along the third direction D**3**, as described above. Therefore, when viewed in the direction along the third direction D**3**, the photoelectric converter **16** is disposed on an extended line of the beam axis Lba. For example, the photoelectric converter **16** is disposed on the one side in the first direction D**1** and on the one side in the second direction D**2** with respect to the center **33***a* of the light emitting portion group **33**. In addition, the beam axis Lba in FIG. **10** extends through the center **33***a* of the light emitting portion group **33** in the beam formation direction Dba that is inclined at an angle a with respect to the second direction D**2** so that it shifts toward the one side of the first direction D**1** as it proceeds toward the one side of the second direction D**2**.

[0099] In the optical waveguide structure **10** configured as described above, as shown in FIG. **9** and FIG. **10**, the light emitted from the light source **76** is incident on the light incident unit **19** of the optical phased array **18**, and the incident light is distributed to each of the waveguides **22** by the light distribution unit **20**. The phases of the guided lights **22***a*, which are the lights distributed by the light distribution unit **20** and propagate through the respective waveguides **22**, are respectively adjusted by the phase adjusters **24**, and the guided lights **22***a* after the phase adjustment travel toward the optical antenna units **26** in the waveguides **22** and are emitted from the optical antenna units **26** to the outside of the optical waveguide structure **10**.

[0100] However, since the optical phased array **18** of the present embodiment includes the light emitting portions **34**. Thus, in each of the waveguides **22**, a part of the guided light **22***a* after the phase adjustment is emitted as the emitted light from the light emitting portion **34** before reaching the optical antenna unit **26**. For example, in the present embodiment, the amount of the emitted light emitted from the light emitting portion **34** is about 3% of the amount of the guided light **22***a* outputted from the phase adjuster **24**.

[0101] Moreover, the optical phased array **18** of the present embodiment can scan the beam BM in the same manner as the optical phased array **70** of FIG. **1**. In other words, in the optical phased array **18** of the present embodiment, the beam BM formed by the lights emitted from the optical antenna units **26** can be formed in any direction by regularly controlling the phases of the guided lights **22***a* propagating through the respective waveguides **22** with the phase adjusters **24**.

[0102] In the present embodiment, the emitted lights emitted from the light emitting portions **34** are used to perform phase correction for eliminating variations in the initial phases of the guided lights **22***a* in the waveguides **22**. Specifically, in the phase correction for the guided lights **22***a*, the phases of the guided lights **22***a* are respectively adjusted by the phase adjusters **24** so that the output of the photoelectric converter **16** becomes maximum within an adjustable range.

[0103] As described above, according to the present embodiment, the light emitting portions **34** are respectively disposed on the waveguides **22** on the substrate **12**, as shown in FIG. **10** and FIG. **11**. Each of the light emitting portions **34** emits, as the emitted light, a part of the guided light **22***a* that has passed through the phase adjuster **24** and propagates trough the waveguide **22**, from the waveguide **22** in the direction different from the antenna unit emitting direction Dan in FIG. **11**. In addition, the photoelectric converter **16** is disposed on the substrate **12** and is arranged on the one side in the second direction D**2** with respect to all of the light emitting portions **34** of the optical phased array **18**. Furthermore, the position of the photoelectric converter **16** is set so that the emitted beam Ba is incident on the photoelectric converter **16** when the phases of the emitted lights emitted from the light emitting portions **34** of the waveguides **22** are matched with each other.

[0104] As a result, a part of the guided light **22***a* propagating through each of the waveguides **22** is emitted as the emitted light from each of the light emitting portions **34**, and when the phases of the emitted lights are matched with each other, the emitted beam Ba formed by the emitted light is incident on the photoelectric converter **16**. Therefore, the photoelectric converter **16** can obtain the function of acquiring the guided lights **22***a* in order to perform the phase correction for restricting the phase variation of the guided lights **22***a* in the waveguides **22**. Furthermore, since the photoelectric converter **16** is disposed on the same substrate **12** as the waveguides **22**, it is possible to provide a chip having the waveguides **22** with the function of acquiring the guided lights **22***a* for the phase correction.

[0105] Furthermore, since the photoelectric converter **16** is disposed on the one side of the second direction D**2** with respect to all of the light emitting portions **34** of the optical phased array **18**, the arrangement of the waveguides **22** is not hindered from being arranged with a narrow pitch due to the arrangement of the photoelectric converter **16**. For example, compared to a configuration in which various elements such as photoelectric converters **16** are arranged between waveguides **22** that propagate guided lights **22***a*, specifically, the configuration of the second reference example described above, it can be said that the arrangement of the waveguides **22** is less likely to be hindered from having a narrow pitch.

[0106] Furthermore, according to the present embodiment, as shown in FIG. **10** and FIG. **12**, each of the plurality waveguides **22** has the core width changed portion **341** in which the width dimension Wc, which is the core width of the core portion **221** in the second direction D**2**, is locally changed. Each of the plurality of light emitting portions **34** is formed by the core width changed portion **341**. The plurality of light emitting portion **34** can be formed depending on the shapes of the plurality of waveguides **22**. Therefore, there is an advantage in that it is easy to provide the plurality of light emitting portion **34** in the manufacture of the optical waveguide structure **10**.

[0107] Furthermore, according to the present embodiment, the core width changed portion **341** included in each of the

plurality of waveguides **22** is a portion where the core width of the core portion **221** is locally narrowed. Therefore, compared to a case where, for example, a core width changed portion **341** is constituted of a portion of each of the plurality of waveguides **22** where the core width locally expands in the second direction D**2**, there is an advantage in that it is easier to achieve a narrower pitch for arranging the plurality of waveguides **22**.

Second Embodiment

[0108] Next, a second embodiment will be described. The present embodiment is explained mainly with respect to points different from those of the first embodiment. In addition, explanations of the same or equivalent portions as those in the above embodiment is omitted or simplified. The same is also true for the description of the later-described embodiments.

[0109] As shown in FIG. **18** and FIG. **19**, in the present embodiment, similarly to the first embodiment, the core width changed portion **341** included in each of the plurality of waveguides **22** is a portion where the width dimension Wc, which is the core width of each of the plurality of waveguides **22**, is locally changed. Each of the light emitting portions **34** is formed by the core width changed portion **341**.

[0110] However, in the present embodiment, no groove **341***a* (see FIG. **12**) is formed in the core width changed portion **341**. Instead, in the present embodiment, the core width changed portion **341** is formed with a protrusion **341***b* that protrudes to the one side in the second direction D**2**. Therefore, the core width changed portion **341** included in each of the plurality of waveguides **22** is a portion where the core width of each of the plurality of waveguides **22** is locally expanded.

[0111] The present embodiment is similar to the first embodiment, except for the above described aspects. Thus, the present embodiment can achieve the advantages obtained by the configuration common to the first embodiment described above in a similar manner as in the first embodiment.

Third Embodiment

[0112] Next, a third embodiment will be described. The present embodiment is explained mainly with respect to points different from those of the first embodiment.

[0113] As shown in FIG. **20**, FIG. **21** and FIG. **22**, in the present embodiment, the structure of the light emitting portion **34** is different from that in the first embodiment, and the groove **341***a* shown in FIG. **12** is not provided in each of the plurality of waveguides **22**. Therefore, each of the plurality of light emitting portion **34** of the present embodiment does not have the core width changed portion **341** shown in FIG. **12**.

[0114] Specifically, each of the plurality of light emitting portions **34** in the present embodiment includes an emitting component **342** and a closely arranged portion **343**. The emitting component **342** constitutes a portion of the core portion **221** in each of the plurality of waveguides **22** in the first direction D**1**. The closely arranged portion **343** is shifted to the one side in the second direction D**2** with respect to the emitting component **342**. Specifically, the closely arranged portion **343** is arranged next to the emitting portion **342** at a small interval on the one side in the second direction D**2**.

[0115] In detail, the closely arranged portions **343** respectively provided for the waveguides **22** are formed so as to be laminated on the one side of the substrate **12** in the third direction D**3**, similar to the plurality of waveguide **22**. The closely arranged portions **343** are made of the same material as the core portions **221** of the plurality of waveguides **22**, and are included in the same core layer **14** as the core portions **221** of the waveguides **22** in the laminated structure of the optical waveguide structure **10**. In other words, the closely arranged portions **343** are made of the same Si as the core portions **221**, and has the same thickness dimension tc as the core portions **221**.

[0116] Furthermore, in each of the light emitting portions **34**, the closely arranged portion **343** is arranged adjacent to the one side of the emitting component **342** in the second direction D**2** so as to diffract and emit a light that leaks out from the emitting component **342**. In other words, in each of the light emitting portions **34**, the closely arranged portion **343** is arranged adjacent to the emitting component **342** so as to emit a part of the guided light **22***a* from the emitting portion **342** to the outside of each of the plurality of waveguides **22**.

[0117] Each of the closely arranged portions **343** has a rectangular parallelepiped shape. For example, a first width W**1**, which is a width in the first direction D**1** of the closely arranged portion **343**, and a second width W**2**, which is a width in the second direction D**2** of the closely arranged portion **343**, are "W**1**=W**2**=0.3 μm", and a distance CD between the closely arranged portion **343** and the emitting component **342** in the second direction D**2** is "CD=0.1 μm".

[0118] As described above, the closely arranged portion **343** of each of the light emitting portions **34** is shifted in the second direction D**2** with respect to the emitting component **342**, so that in the present embodiment, each of the light emitting portions **34** emits a part of the guided light **22***a* to the one side and the other side of the second direction D**2**.

[0119] As described above, according to the present embodiment, each of the light emitting portions **34** includes the emitting component **342** included in the core portion **221** of each of the waveguides **22**, and the closely arranged portion **343**. The closely arranged portion **343** is arranged adjacent to the emitting component **342** so as to emit a part of the guided light **22***a* from the emitting component **342**, and is shifted in the second direction D**2** with respect to the emitting component **342**.

[0120] Accordingly, it is possible to form a diffraction structure for emitting a part of the guided light **22***a* from each of the waveguides **22** to the one side and the other side in the second direction D**2**, away from each of the waveguides **22**, rather than directly on each of the waveguides **22**. Therefore, even if a dimensional processing precision of the core layer **14** is low, it is possible to design the amount of lights used for phase correction to be smaller than that in the first embodiment, for example. If the amount of lights used for the phase correction is reduced, the amount of lights emitted from the optical antenna units **26** can be increased accordingly.

[0121] As shown in FIG. **23**, in the present embodiment, an emitted beam Ba composed of the emitted lights from the light emitting portions **34** is formed in the same manner as in the first embodiment, and the beam formation direction

Dba, which is the direction of the emitted beam Ba, is, for example, the same as in the first embodiment. Therefore, in the present embodiment as well, the relative arrangement of the photoelectric converter **16** with respect to the light emitting portion group **33** is the same as in the first embodiment. However, the light intensity of the emitted beam Ba in the present embodiment is lower than that in the first embodiment. The direction constituting the horizontal axis in the coordinate system of FIG. **23** is the same as the direction constituting the horizontal axis in the coordinate system of FIG. **17**.

[0122] Furthermore, according to the present embodiment, each of the closely arranged portions **343** is made of the same material as the core portions **221** of the waveguides **22**, and is included in the same core layer **14** as the core portions **221** of the waveguides **22** in the layered structure of the optical waveguide structure **10**. Therefore, it is possible to easily form the closely arranged portions **343** while restricting an increase in the number of manufacturing processes caused by providing the plurality of closely arranged portions **343**.

[0123] The present embodiment is similar to the first embodiment, except for the above described aspects. Thus, the present embodiment can achieve the advantages obtained by the configuration common to the first embodiment described above in a similar manner as in the first embodiment.

Fourth Embodiment

[0124] A fourth embodiment is described next. The present embodiment will be explained mainly with respect to portions different from those of the third embodiment.

[0125] As shown in FIG. **24** and FIG. **25**, in the present embodiment, each of the plurality of light emitting portions **34** includes the emitting component **342** and the closely arranged portion **343**, but the arrangement of the closely arranged portion **343** is different from that in the third embodiment.

[0126] Specifically, in the present embodiment, in each of the plurality of light emitting portions **34**, the closely arranged portion **343** is arranged to be shifted to the other side in the second direction D**2** with respect to the emitting component **342**. The closely arranged portion **343** is not included in the core layer **14**, and is arranged away from the emitting component **342** on the one side of the third direction D**3** with a small gap therebetween, and a portion of the closely arranged portion **343** overlaps a portion of the emitting component **342** on the one side of the third direction D**3**.

[0127] The closely arranged portion **343** may be made of the same material as the core portion **221** of each of the waveguides **22**. However, in the present embodiment, the closely arranged portion **343** is made of a material different from that of the core portion **221**, for example, SiN.

[0128] Also in the present embodiment, the closely arranged portion **343** of each of the light emitting portions **34** is shifted in the second direction D**2** with respect to the emitting component **342**, so that each of the light emitting portions **34** emits a part of the guided light **22***a* from each of the light emitting portions **34** to the one side and the other side of the second direction D**2**.

[0129] Aside from the above described aspects, the present embodiment is the same as the third embodiment. Thus, the present embodiment can achieve the advantages obtained by the configuration common to the third embodiment described above in a similar manner as in the third embodiment.

Fifth Embodiment

[0130] A fifth embodiment is described next. The present embodiment is explained mainly with respect to points different from those of the first embodiment.

[0131] As shown in FIG. **26**, in the present embodiment, two photoelectric converters **16** are disposed on the substrate **12**. One of the two photoelectric converters **16** is referred to as a first photoelectric converter **161** and the other is referred to as a second photoelectric converter **162**. The first and second photoelectric converters **161**, **162** are each a photodetector identical to the photoelectric converter **16** of the first embodiment, and the arrangement of the first and second photoelectric converters **161**, **162** in the third direction D**3** is the same as that of the photoelectric converter **16** of the first embodiment.

[0132] The first photoelectric converter **161** is arranged in a direction different from a direction in which the second photoelectric converter **162** is arranged, based on the center **33***a* of the light emitting portion group **33**, when viewed in the direction along the third direction D**3**.

[0133] Specifically, the first photoelectric converter **161** is disposed so as to overlap a first beam axis L**1***ba* that extends through the center **33***a* of the light emitting portion group **33** when viewed in the direction along the third direction D**3**. The first beam axis L**1***ba* is a straight line along a first emitted beam B**1***a* indicated by an arrow in FIG. **26**. The first emitted beam B**1***a* is one of a plurality of emitted beams Ba formed by the emitted lights when the wavelength of the light emitted by the light source **76** is a predetermined first wavelength λ1 and the phases of the emitted lights from the plurality of light emitting portions **34** are matched with each other. In this manner, the arrangement of the first photoelectric converter **161** is set so as to correspond to the case where the wavelength of the light emitted by the light source **76** is the first wavelength λ1.

[0134] The second photoelectric converter **162** is disposed so as to overlap with a second beam axis L**2***ba* that extends through the center **33***a* of the light emitting portion group **33** when viewed in the direction along the third direction D**3**. The second beam axis L**2***ba* intersects with the first beam axis L**1***ba* and is a straight line along the second emitted beam B**2***a* indicated by an arrow in FIG. **26**. The second emitted beam B**2***a* is one of the plurality of emitted beams Ba formed by the emitted lights when the wavelength of the light emitted by the light source **76** is a predetermined second wavelength λ2 different from the first wavelength λ1 and the phases of the emitted lights from the plurality of light emitting portions **34** are matched with each other. In this manner, the arrangement of the second photoelectric converter **162** is set so as to correspond to the case where the wavelength of the light emitted by the light source **76** is the second wavelength λ2.

[0135] The direction and arrangement of the first beam axis L**1***ba* along the first emitted beam B**1***a* can be obtained by computer simulation, with the wavelength of the light emitted by the light source **76** being determined as the first wavelength λ1 in advance. Similarly, the direction and arrangement of the second beam axis L**2***ba* along the second emitted beam B**2***a* can be determined by computer simula-

tion, with the wavelength of the light emitted by the light source **76** being determined as the second wavelength λ2 in advance.

[0136] As described above, according to the present embodiment, the first photoelectric converter **161** is arranged in the direction different from the direction in which the second photoelectric converter **162** is arranged, based on the center **33***a* of the light emitting portion group **33**, when viewed in the direction along the third direction D**3**.

[0137] If the wavelength of the light emitted by the light source **76** is different, then the directions of the emitted beams B**1***a*, B**2***a* formed by the emitted lights will differ depending on the wavelength when the phases of the emitted lights from the light emitting portions **34** are matched with each other. Therefore, the optical waveguide structure **10** can be provided with a function of acquiring the guided lights **22***a* of the waveguides **22** so as to correspond to cases in which the light emitted by the light source **76** is switched between a plurality of different wavelengths and to perform phase correction at each of the wavelengths.

[0138] The present embodiment is similar to the first embodiment, except for the above described aspects. Thus, the present embodiment can achieve the advantages obtained by the configuration common to the first embodiment described above in a similar manner as in the first embodiment.

[0139] The present embodiment is a modification based on the first embodiment and can also be combined with any of the second to the fourth embodiments described above.

Sixth Embodiment

[0140] A sixth embodiment is described next. The present embodiment is explained mainly with respect to points different from those of the first embodiment.

[0141] As shown in FIG. **27**, the optical waveguide structure **10** includes a light receiving waveguide **36** connected to the photoelectric converter **16**. The light receiving waveguide **36** is a waveguide that guides, to the photoelectric converter **16**, the emitted beam Ba formed by the emitted lights emitted from the light emitting portion group **33** when the phases of the emitted lights from the light emitting portions **34** are matched with each other. Therefore, when viewed in the direction along the third direction D**3**, the light receiving waveguide **36** extends from the photoelectric converter **16** toward the center **33***a* of the light emitting portion group **33**.

[0142] For example, the light receiving waveguide **36** includes a core portion formed at the same laminated position as the photoelectric converter **16** in the third direction D**3** in the laminated structure of the optical waveguide structure **10**, and a cladding portion surrounding the core portion in the cladding layer **13** in FIG. **13**. The core portion of the light receiving waveguide **36** is made of, for example, Si.

[0143] As described above, according to the present embodiment, the light receiving waveguide **36** extends from the photoelectric converter **16** toward the center **33***a* of the light emitting portion group **33** when viewed in the direction along the third direction D**3**. Thus, the light receiving waveguide **36** is disposed so as to be parallel or approximately parallel to the emitted beam Ba emitted from the light emitting portion group **33**.

[0144] Therefore, the emitted beam Ba is guided to the photoelectric converter **16** through the light receiving waveguide **36**, while the light receiving waveguide **36** prevents disturbance light Nz, which is oriented in a direction intersecting the emitted beam Ba, from being incident on the photoelectric converter **16**. As a result, the phase correction using the emitted beam Ba incident on the photoelectric converter **16** can be performed with high accuracy.

[0145] The present embodiment is similar to the first embodiment, except for the above described aspects. Thus, the present embodiment can achieve the advantages obtained by the configuration common to the first embodiment described above in a similar manner as in the first embodiment.

[0146] Although the present embodiment is a modification based on the first embodiment, the present embodiment can be combined with any of second to fifth embodiments described above.

Seventh Embodiment

[0147] A seventh embodiment is described next. The present embodiment will be explained primarily with respect to portions different from those of the sixth embodiment.

[0148] As shown in FIG. **28**, when viewed in the direction along the third direction D**3**, a width of the light receiving waveguide **36** increases with increase in distance from the photoelectric converter **16** along the extension direction of the receiving waveguide **36**, that is, the extension direction of the beam axis Lba. In other words, a tip end of the light receiving waveguide **36** that is close to the light emitting portion group **33** is wider than a base end of the light receiving waveguide **36** that is close to the photoelectric converter **16**.

[0149] As described above, according to the present embodiment, when viewed in the direction along the third direction D**3**, the width of the light receiving waveguide **36** increases with increase in distance from the photoelectric converter **16** along the direction in which the light receiving waveguide **36** extends. Therefore, a light receiving angle at which the light receiving waveguide **36** can receive lights from the light emitting portion group **33** becomes narrower. In other words, the directivity of the light receiving waveguide **36** when receiving the lights from the light emitting portion group **33** becomes high. As a result, the phase correction can be performed with high accuracy, as compared with the case where the light receiving waveguide **36** has a shape elongated with a constant width, for example.

[0150] Aside from the above described aspects, the present embodiment is the same as the sixth embodiment. Further, in the present embodiment, effects similar to those of the sixth embodiment described above can be obtained in the same manner as in the sixth embodiment.

Eighth Embodiment

[0151] An eighth embodiment is described next. The present embodiment is explained mainly with respect to points different from those of the first embodiment.

[0152] As shown in FIG. **29**, in the present embodiment, the position of the light emitting portion **34** in each of the waveguides **22** is different from that in the first embodiment. In addition, in FIG. **29** and FIG. **30** described later, " . . . " shown between adjacent light exit sections **30** means that a plurality of light exit sections **30** are not shown.

[0153] Specifically, each of the light emitting portions **34** in the present embodiment is disposed in the middle of a light exit section row **30***c* formed by a plurality of light exit sections **30** for each of the plurality of waveguides **22**. For example, in each of the waveguides **22**, some light exit sections **30** are disposed on the one side of the light emitting portion **34** in the first direction D**1**, and the other light exit sections **30** are disposed on the other side of the light emitting portion **34** in the first direction D**1**.

[0154] Since each of the waveguides **22** is actually formed with some tolerance during manufacturing, the guided light **22***a* travels through each of the waveguides **22** with a slight change in the phase of the guided light **22***a*.

[0155] According to the present embodiment, each of the light emitting portions **34** is disposed in the middle of the light exit section row **30***c* formed by the plurality of light exit sections **30** for each of the waveguides **22**, as described above. Accordingly, the emitted beam Ba incident on the photoelectric converter **16** from the light emitting portion group **33** is composed of lights emitted from portions of the waveguides **22** that overlap with the optical antenna units **26**.

[0156] Therefore, compared to the case where the light emitting portions **34** are disposed on the one side or the other side of the optical antenna units **26** in the first direction D**1** on the waveguides **22**, the phase correction can be performed so that the phases of the emitted lights from the optical antenna units **26** are matched with high precision. As a result, it becomes possible to perform scanning with the beam BM formed by the lights emitted from the optical antenna units **26** with high accuracy.

[0157] The present embodiment is similar to the first embodiment, except for the above described aspects. Thus, the present embodiment can achieve the advantages obtained by the configuration common to the first embodiment described above in a similar manner as in the first embodiment.

[0158] The present embodiment is a modification based on the first embodiment and can also be combined with any of the second to the seventh embodiments described above.

Ninth Embodiment

[0159] A ninth embodiment is described next. The present embodiment is explained mainly with respect to points different from those of the first embodiment.

[0160] As shown in FIG. **30**, in the present embodiment, the position of the light emitting portion **34** in each of the waveguides **22** is different from that in the first embodiment.

[0161] Specifically, in the present embodiment, the light emitting portion **34** is disposed on the opposite side to the phase adjuster **24** with respect to the optical antenna unit **26** in each of the plurality of waveguides **22**. In other words, in each of the plurality of waveguides **22**, the light emitting portion **34** is disposed on the one side of the optical antenna unit **26** in the first direction D**1**.

[0162] Therefore, the emitted beam Ba for phase correction can be formed using the light that remains without being emitted from the optical antenna unit **26**, so that phase correction can be performed without wasting energy.

[0163] The present embodiment is similar to the first embodiment, except for the above described aspects. Thus, the present embodiment can achieve the advantages obtained by the configuration common to the first embodiment described above in a similar manner as in the first embodiment.

[0164] The present embodiment is a modification based on the first embodiment and can also be combined with any of the second to the seventh embodiments described above.

Other Embodiments

[0165] In each of the above-described embodiments, three waveguides **22** are provided as shown in FIG. **10**, for example. However, the number of waveguides **22** may be two, or four or more.

[0166] In the first embodiment described above, as shown in FIG. **10**, the photoelectric converter **16** is disposed on the one side of the second direction D**2** with respect to all of the light emitting portions **34** of the optical phased array **18**. However, this arrangement is just one example. For example, the photoelectric converter **16** may be disposed on the other side of the second direction D**2** with respect to all of the light emitting portions **34**, that is on the opposite side of the plurality of waveguides **22** from the side on which the grooves **341***a* of the light emitting portions **34** are formed. Furthermore, as shown in FIG. **31**, the photoelectric converters **16** may be disposed on both the one side and the other side of all of the plurality of light emitting portions **34** in the second direction D**2**. This is because each of the plurality of light emitting portions **34** emits a part of the guided light **22***a* to both the one side and the other side in the second direction D**2**. Even if the photoelectric converter **16** is disposed on the other side of the second direction D**2** with respect to all of the plurality of light emitting portions **34** as described above, the photoelectric converter **16** does not hinder the plurality of waveguides **22** being arranged at a narrow pitch, as in the first embodiment. This is also true in the case where the photoelectric converters **16** are disposed on both sides of all the plurality of light emitting portions **34** in the second direction D**2** as described above.

[0167] In each of the above-described embodiments, for example, the substrate **12** shown in FIG. **11** is made of Si, the cladding layer **13** is made of SiO_2, the core layer **14** is made of Si, and the second light exit components **30***b* are made of SiN. However, these materials are just examples. Each of these components may be made of other materials.

[0168] For example, the cladding layer **13** may be made of any one of SiN, SiON, LN, InGaAsP, and InP. It is also assumed that the core layer **14** is made of any one of SiO_2, SiN, SiON, LN, InGaAsP, and InP doped with impurities. However, the refractive index of the core layer **14** needs to be higher than the refractive index of the cladding layer **13**, and the second light exit components **30***b* need to have a different refractive index from that of the cladding layer **13**.

[0169] In each of the above-described embodiments, the photoelectric converter **16** shown in FIG. **11** is made of Ge, for example. However, the photoelectric converter **16** may be made of a material other than Ge. For example, the material of the photoelectric converter **16** is appropriately selected depending on the wavelength of the guided light **22***a* propagating through each of the plurality of waveguides **22**.

[0170] In each of the above-described embodiments, as shown in FIG. **11**, the antenna unit emitting direction Dan in which each of the plurality of optical antenna units **26** emits light to the outside is the direction along the third direction D**3**. However, this is merely an example. For example, each

of the optical antenna units **26** may have a structure different from that shown in FIG. **8** and may be configured to emit light to the one side in the first direction D**1**.

[0171] The present disclosure is not limited to the above-described embodiments, and can be implemented in various modifications. The above-described embodiments are not independent of each other, and can be appropriately combined except when the combination is obviously impossible.

[0172] The constituent element(s) of each of the above embodiments is/are not necessarily essential unless it is specifically stated that the constituent element(s) is/are essential in the above embodiment, or unless the constituent element(s) is/are obviously essential in principle. Further, in each of the above-described embodiments, when numerical values such as the number, quantity, range, and the like of the constituent elements of the embodiment are referred to, except in the case where the numerical values are expressly indispensable in particular, the case where the numerical values are obviously limited to a specific number in principle, and the like, the present disclosure is not limited to the specific number. Furthermore, a material, a shape, a positional relationship, or the like, if specified in the above-described embodiments, is not necessarily limited to the specific material, shape, positional relationship, or the like unless it is specifically stated that the material, shape, positional relationship, or the like is necessarily the specific material, shape, positional relationship, or the like, or unless the material, shape, positional relationship, or the like is obviously necessary to be the specific material, shape, positional relationship, or the like in principle.

What is claimed is:

1. An optical waveguide structure comprising:

a substrate;

a plurality of waveguides disposed on the substrate, extending in a first direction, arranged at a uniform pitch in a second direction that is perpendicular to the first direction, and configured to propagate respective lights;

a plurality of phase adjusters respectively disposed on the plurality of waveguides on the substrate, and configured to control phases of the respective lights propagating through the plurality of waveguides;

a plurality of optical antenna units respectively disposed on the plurality of waveguides on the substrate, and configured to emit the respective lights that have passed through the plurality of phase adjusters and propagate through the plurality of waveguides in an antenna unit emitting direction;

a plurality of light emitting portions respectively disposed on the plurality of waveguides on the substrate, and configured to emit a part of the respective lights that have passed through the plurality of phase adjusters and propagate through the plurality of waveguides as emitted lights in a direction different from the antenna unit emitting direction; and

a photoelectric converter disposed on the substrate, disposed on one side, another side, or both sides in the second direction with respect to all of the plurality of light emitting portions, and configured to output an electrical signal corresponding to an intensity of a light incident on the photoelectric converter, wherein

a position of the photoelectric converter is set so that an emitted beam formed by the emitted lights emitted from the plurality of light emitting portions is incident on the photoelectric converter when phases of the emitted lights are matched with each other.

2. The optical waveguide structure according to claim **1**, wherein

each of the plurality of waveguides includes a core portion,

each of the plurality of waveguides has a core width changed portion in which a core width of the core portion in the second direction is locally changed, and

each of the plurality of light emitting portions is formed by the core width changed portion.

3. The optical waveguide structure according to claim **1**, wherein

each of the plurality of waveguides includes a core portion,

each of the plurality of waveguides has a core width changed portion in which a core width of the core portion in the second direction is locally narrowed, and

each of the plurality of light emitting portions is formed by the core width changed portion.

4. The optical waveguide structure according to claim **1**, wherein

each of the plurality of waveguides includes a core portion,

each of the plurality of light emitting portions includes an emitting component and a closely arranged portion,

the emitting component is included in the core portion, and

the closely arranged portion is disposed adjacent to the emitting component and shifted in the second direction with respect to the emitting component so as to emit a part of a light from the emitting component.

5. The optical waveguide structure according to claim **4**, wherein

the closely arranged portion that is included in each of the plurality of light emitting portions and the plurality of waveguides are laminated on the substrate, and

the closely arranged portion is made of a same material as the core portion, and is included in a same layer as the core portion.

6. The optical waveguide structure according to claim **1**, wherein

the photoelectric converter includes a first photoelectric converter and a second photoelectric converter, and

when viewed in a direction along a third direction that is perpendicular to the first direction and the second direction, the first photoelectric converter is disposed in a direction different from a direction in which the second photoelectric converter is disposed, based on a center of a light emitting portion group composed of the plurality of light emitting portions.

7. The optical waveguide structure according to claim **1**, further comprising

a light receiving waveguide configured to guide the emitted beam to the photoelectric converter, wherein

when viewed in a direction along a third direction that is perpendicular to the first direction and the second direction, the light receiving waveguide extends from the photoelectric converter toward a center of a light emitting portion group composed of the plurality of light emitting portions.

8. The optical waveguide structure according to claim **7**, wherein

when viewed in the direction along the third direction, a width of the light receiving waveguide increases with increase in distance from the photoelectric converter along an extending direction of the light receiving waveguide.

9. The optical waveguide structure according to claim **1**, wherein

each of the plurality of optical antenna units has a plurality of light exit sections arranged along each of the plurality of waveguides to form a light exit section row and configured to emit lights from each of plurality of waveguides, and

each of the plurality of light emitting portions is disposed in a middle of the light exit section row in each of the plurality of waveguides.

10. The optical waveguide structure according to claim **1**, wherein

in each of the plurality of waveguides, each of the plurality of light emitting portions is disposed on an opposite side to each of the plurality of phase adjusters with respect to each of the plurality of optical antenna units.

* * * * *