US012383444B2

(12) United States Patent
Oya et al.

(10) Patent No.: US 12,383,444 B2
(45) Date of Patent: Aug. 12, 2025

(54) **CONTROL DEVICE OF VEHICLE, VEHICLE, AND METHOD OF ACTIVATING DOOR TO OPEN AND CLOSE AND SLOPE PLATE TO DEPLOY**

(71) Applicant: **TOYOTA JIDOSHA KABUSHIKI KAISHA**, Toyota (JP)

(72) Inventors: **Kentaro Oya**, Toyota (JP); **Ryo Kanda**, Nissin (JP); **Seiji Kanda**, Miyoshi (JP); **Masaaki Tanaka**, Toyota (JP); **Naoya Ishida**, Chiryu (JP); **Chihiro Date**, Kariya (JP)

(73) Assignee: **TOYOTA JIDOSHA KABUSHIKI KAISHA**, Toyota (JP)

(*) Notice: Subject to any disclaimer, the term of this patent is extended or adjusted under 35 U.S.C. 154(b) by 890 days.

(21) Appl. No.: **17/570,807**

(22) Filed: **Jan. 7, 2022**

(65) **Prior Publication Data**

US 2022/0218541 A1 Jul. 14, 2022

(30) **Foreign Application Priority Data**

Jan. 13, 2021 (JP) 2021-003189
Aug. 10, 2021 (JP) 2021-130947

(51) **Int. Cl.**
A61G 3/06 (2006.01)
B60P 1/43 (2006.01)

(52) **U.S. Cl.**
CPC ***A61G 3/061*** (2013.01); ***A61G 3/065*** (2013.01); ***A61G 3/067*** (2016.11); ***B60P 1/431*** (2013.01)

(58) **Field of Classification Search**
CPC A61G 3/061; A61G 3/067; A61G 3/065; B60P 1/431
See application file for complete search history.

(56) **References Cited**

U.S. PATENT DOCUMENTS

6,825,628 B2 * 11/2004 Heigl H02H 7/0851 414/921
7,735,839 B1 * 6/2010 Schlangen B60P 1/027 280/6.151
2009/0085370 A1 * 4/2009 Bartel A61G 3/065 296/178
2011/0068566 A1 * 3/2011 Bartel B62D 31/02 280/788
2019/0083334 A1 * 3/2019 MacPherson A61G 3/061
2019/0193620 A1 6/2019 Matsuoka et al.
2020/0262326 A1 8/2020 Honda et al.
(Continued)

FOREIGN PATENT DOCUMENTS

JP 2019-116112 A 7/2019
JP 2020-131784 A 8/2020

Primary Examiner — Abigail A Risic
(74) *Attorney, Agent, or Firm* — Dinsmore & Shohl LLP

(57) **ABSTRACT**

A control device of a vehicle is installed in a vehicle including: a body having a vehicle cabin and a floor panel constituting a floor of the vehicle cabin; a door opening-closing mechanism that drives a door mounted on the body to open and close; and a slope deploying mechanism that deploys a slope plate housed under the floor panel to the outside of the body. The control device coordinates the operation of the door opening-closing mechanism and the slope deploying mechanism. The control device opens the door by the door opening-closing mechanism after deploying the slope plate toward the outside of the body by the slope deploying mechanism.

6 Claims, 19 Drawing Sheets

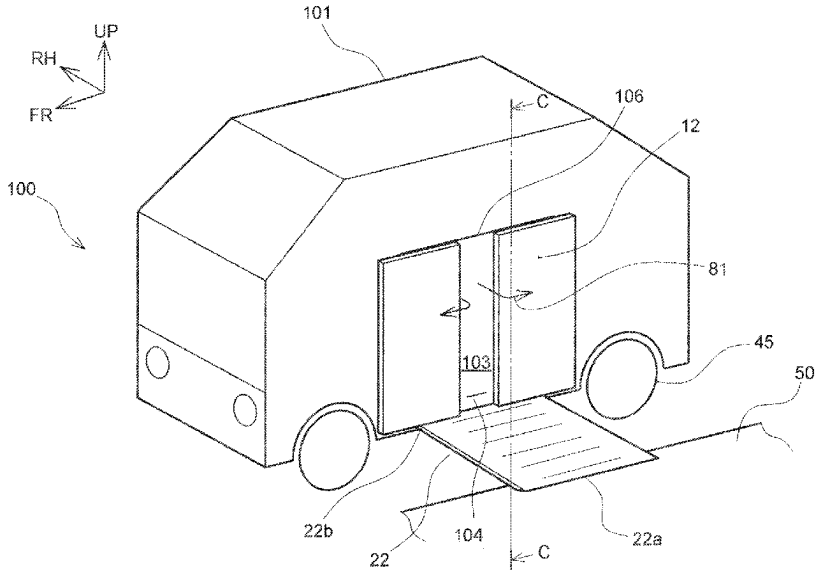

(56) **References Cited**

U.S. PATENT DOCUMENTS

2021/0000666	A1*	1/2021	Smith	B60P 1/431
2021/0245650	A1*	8/2021	Tomioka	A61G 3/061
2022/0218541	A1*	7/2022	Oya	A61G 3/065
2022/0219589	A1*	7/2022	Ishida	B60P 1/431
2022/0409451	A1*	12/2022	Lee	A61G 3/067
2023/0092127	A1*	3/2023	Cho	B60K 1/04 14/71.1

* cited by examiner

FIG. 1

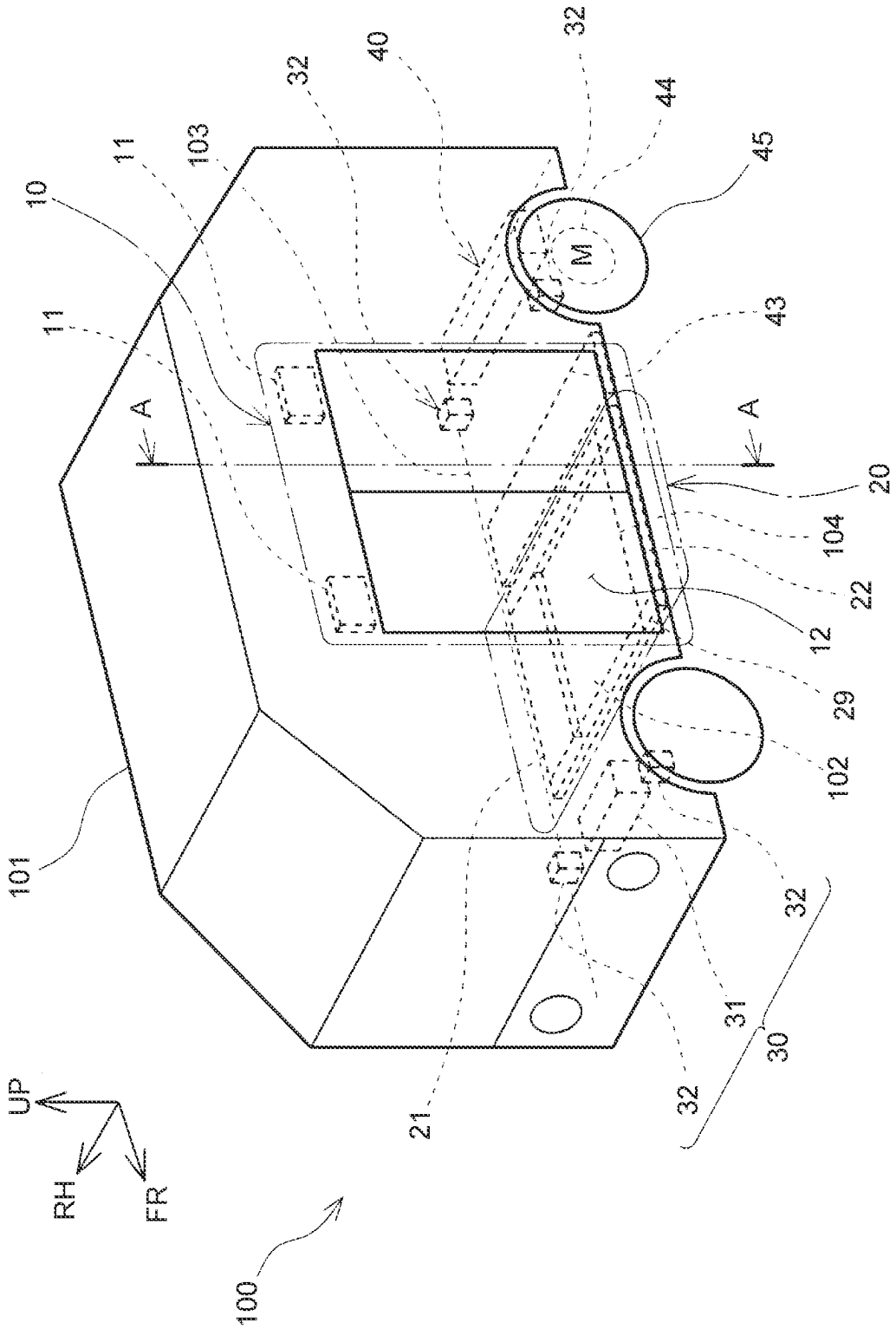
10
11
11
103
32
40
32
44
45
M
43
A
A
20
104
22
12
29
102
32
31
30
32
21
101
UP
RH
FR
100

FIG. 2

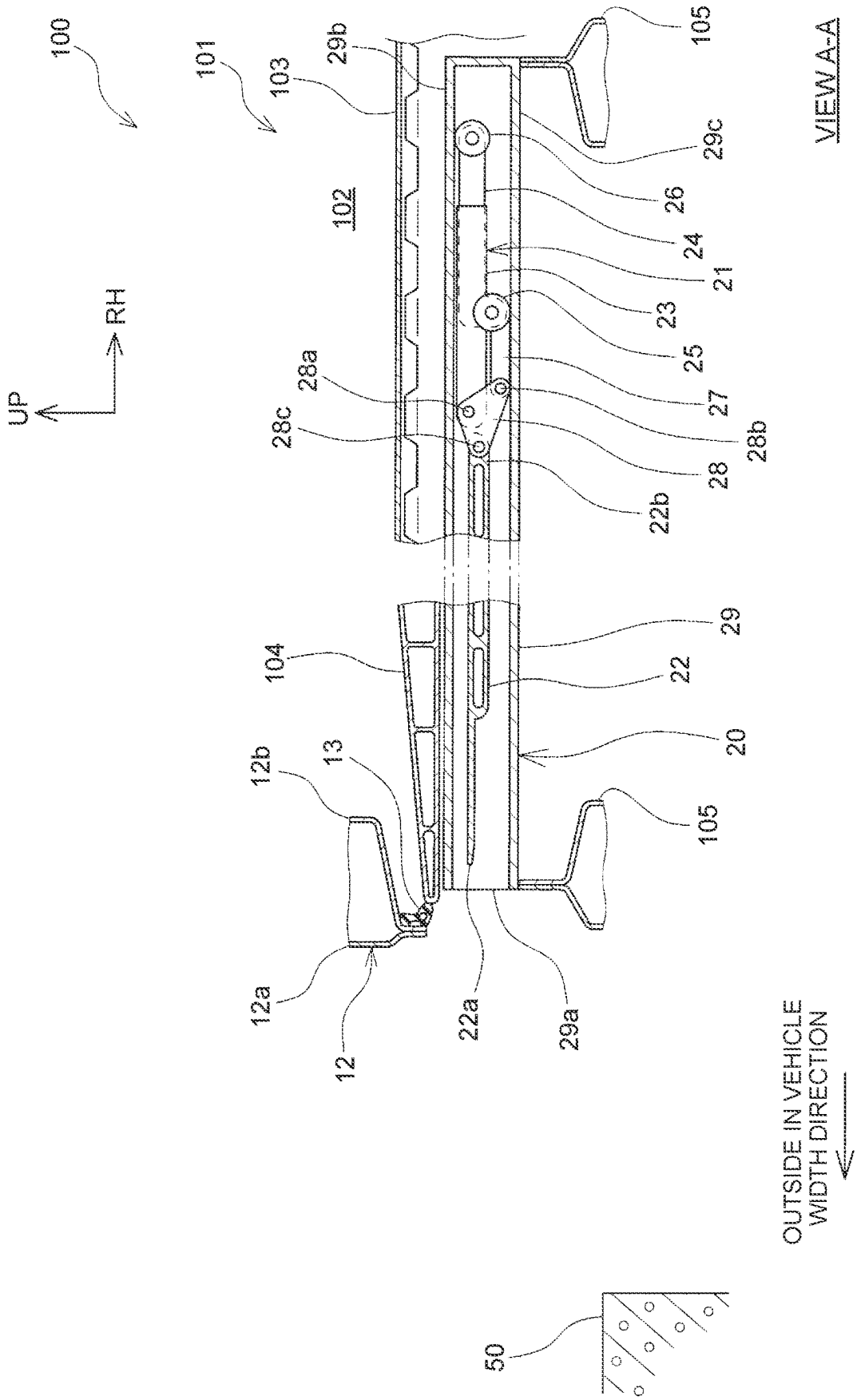
100
101
103
29b
105
VIEW A-A
29c
102
26
24
21
23
25
27
28b
28
22b
28a
28c
UP
RH
29
22
20
104
12b
13
105
12a
12
22a
29a
OUTSIDE IN VEHICLE WIDTH DIRECTION
50

FIG. 3

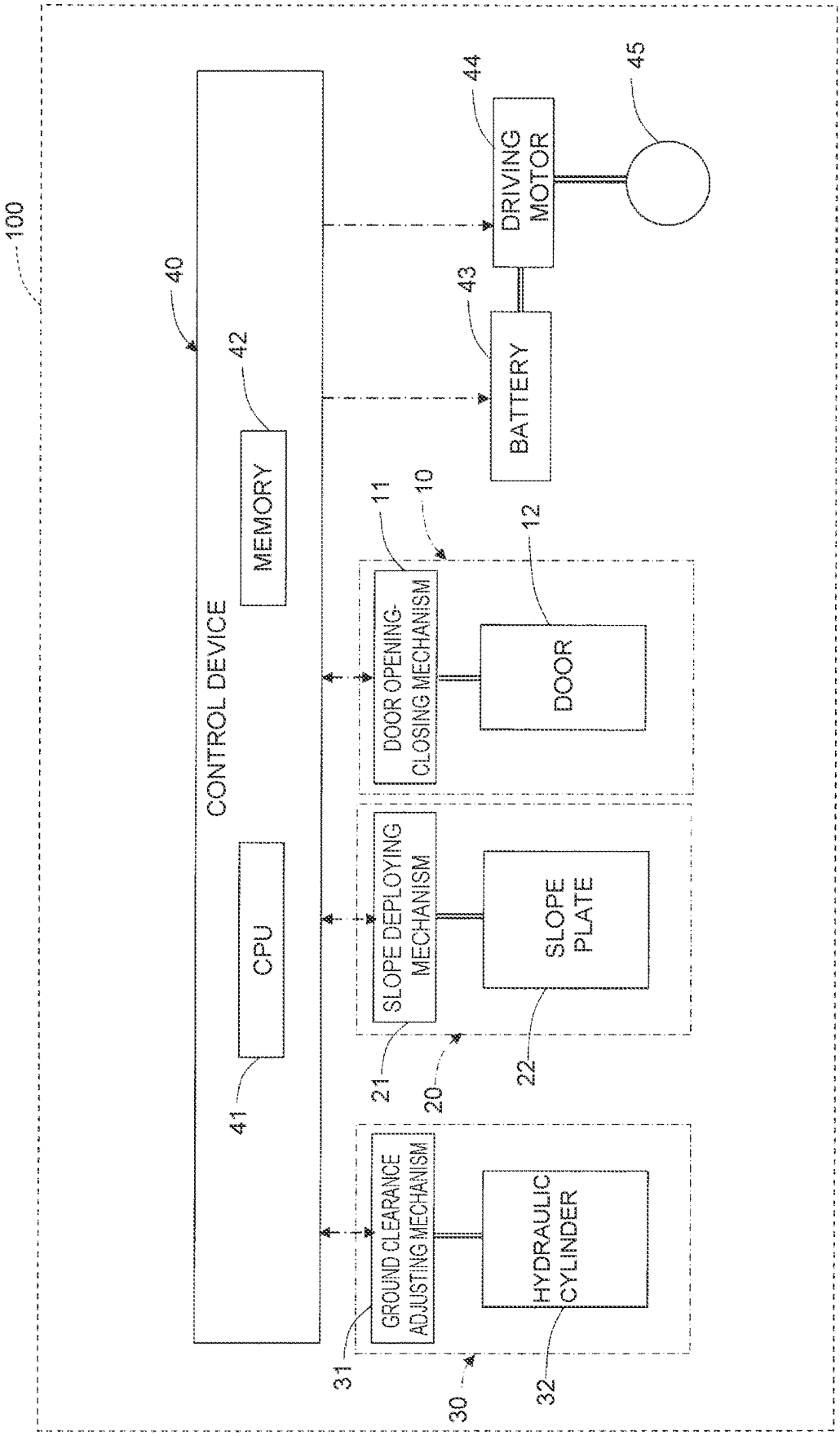
100
40
CONTROL DEVICE
42
MEMORY
41
CPU
44
DRIVING MOTOR
45
43
BATTERY
11
10
12
DOOR OPENING-CLOSING MECHANISM
DOOR
SLOPE DEPLOYING MECHANISM
SLOPE PLATE
21
20
22
GROUND CLEARANCE ADJUSTING MECHANISM
HYDRAULIC CYLINDER
31
30
32

FIG. 4

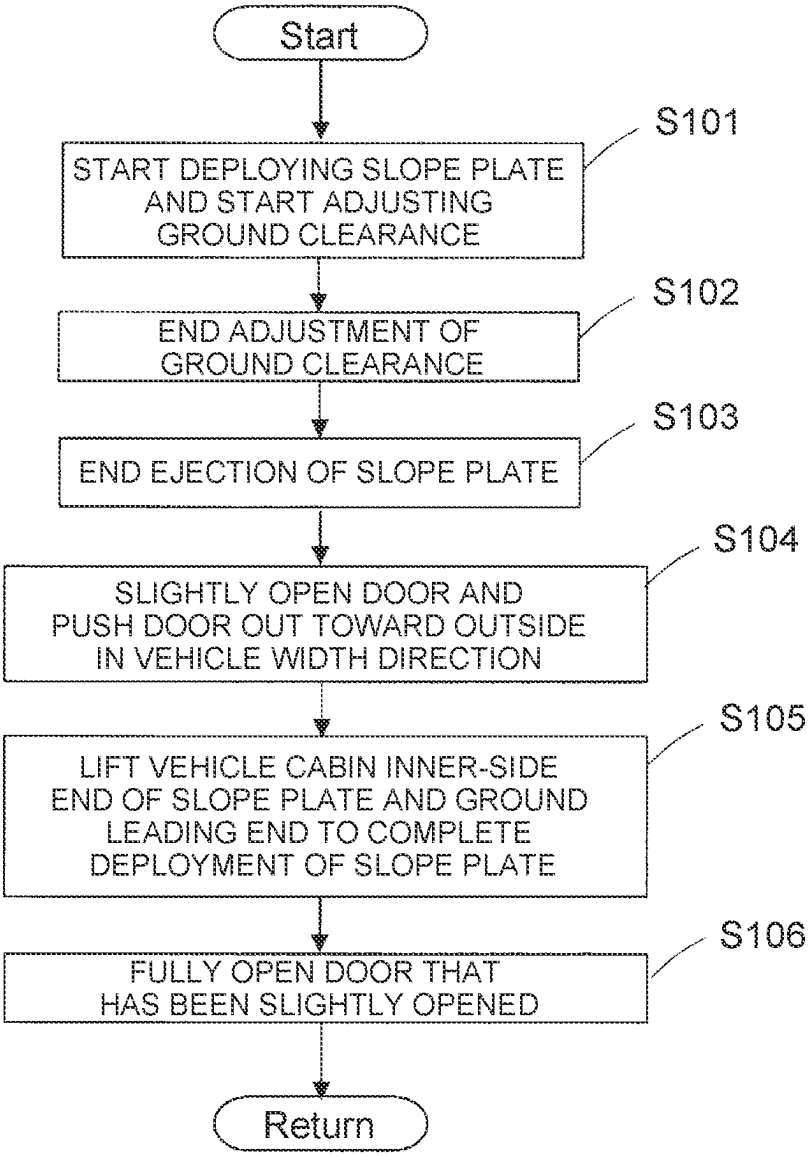
Start
S101
START DEPLOYING SLOPE PLATE AND START ADJUSTING GROUND CLEARANCE
S102
END ADJUSTMENT OF GROUND CLEARANCE
S103
END EJECTION OF SLOPE PLATE
S104
SLIGHTLY OPEN DOOR AND PUSH DOOR OUT TOWARD OUTSIDE IN VEHICLE WIDTH DIRECTION
S105
LIFT VEHICLE CABIN INNER-SIDE END OF SLOPE PLATE AND GROUND LEADING END TO COMPLETE DEPLOYMENT OF SLOPE PLATE
S106
FULLY OPEN DOOR THAT HAS BEEN SLIGHTLY OPENED
Return

FIG. 5

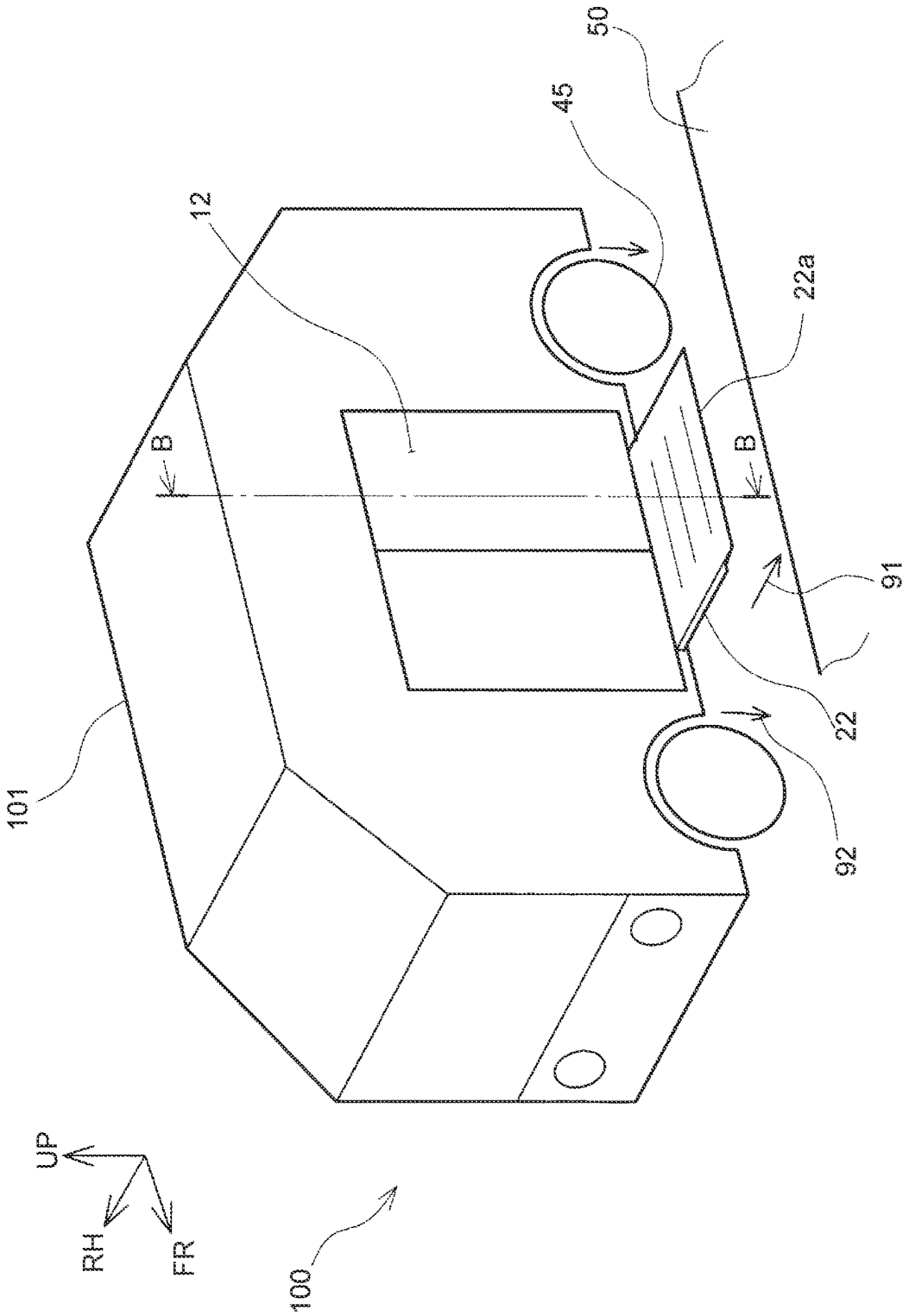

FIG. 6

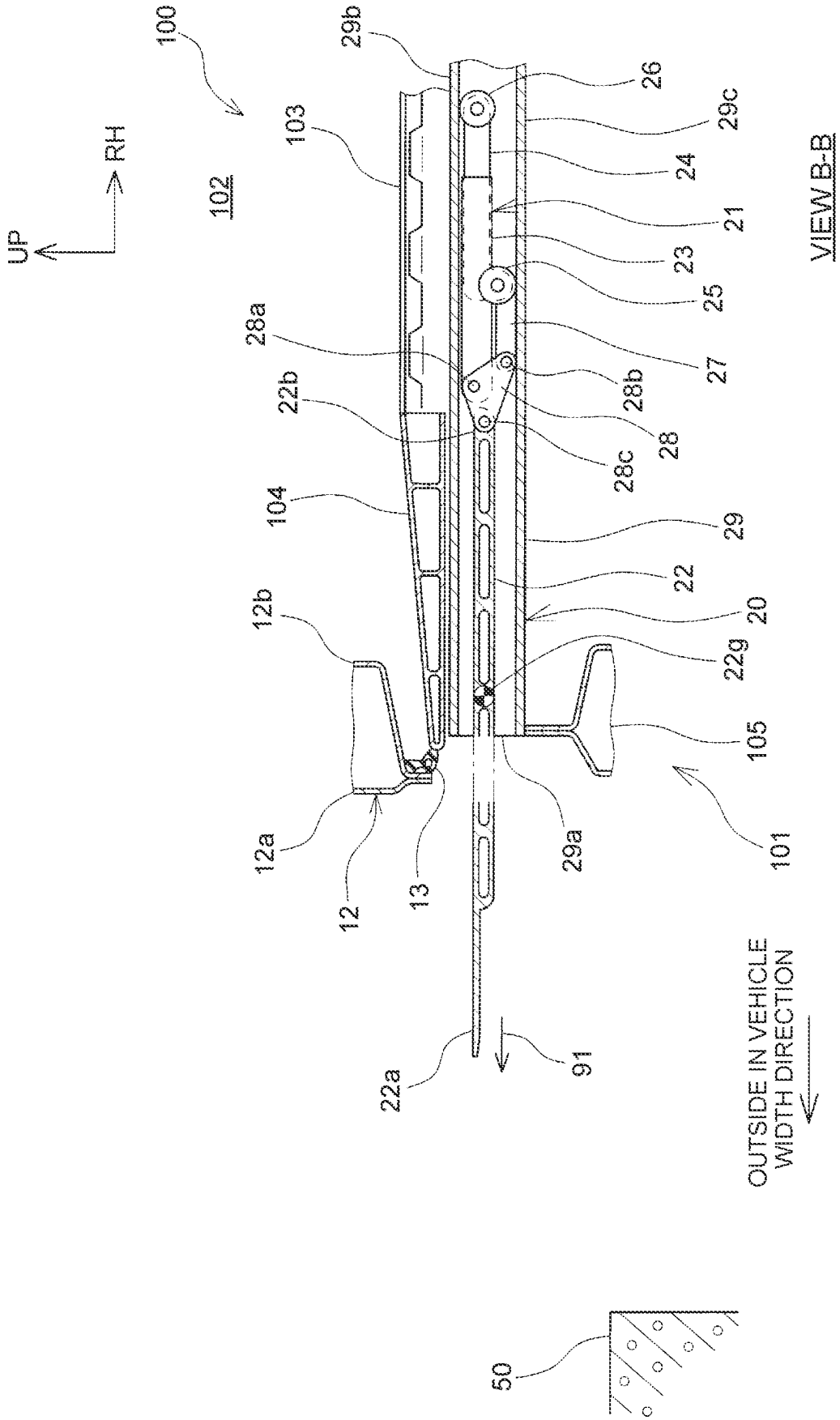
100
UP
RH
102
103
29b
26
29c
24
21
23
25
27
28a
22b
28b
28
28c
104
29
22
20
12b
22g
105
12a
12
13
29a
101
22a
91
OUTSIDE IN VEHICLE WIDTH DIRECTION
VIEW B-B
50

FIG. 7

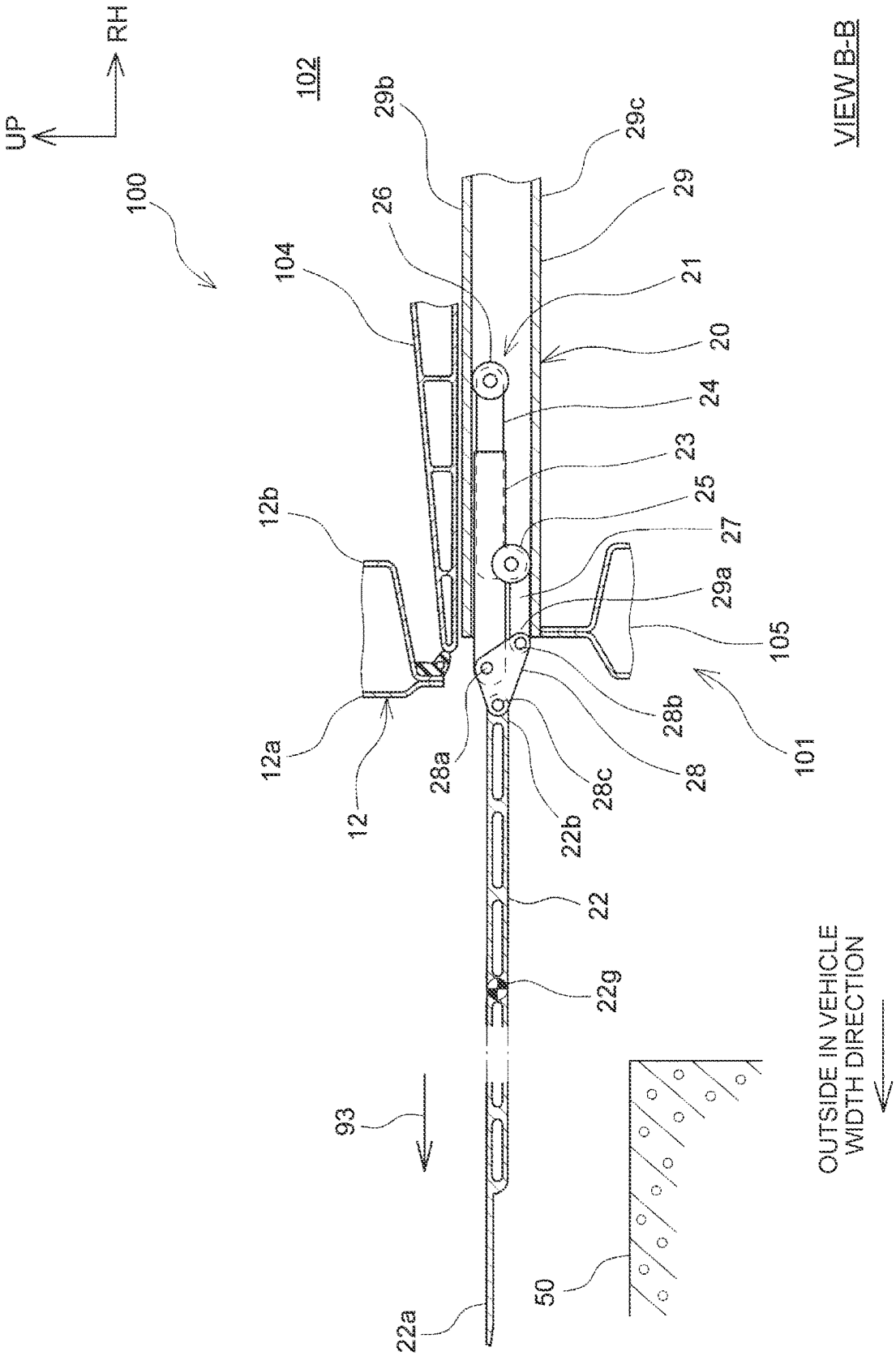
UP
RH
100
102
104
12b
12a
12
26
29b
29c
29
21
20
24
23
25
27
29a
105
28b
28a
28c
28
101
22b
22
22g
93
50
22a
VIEW B-B
OUTSIDE IN VEHICLE WIDTH DIRECTION

FIG. 8

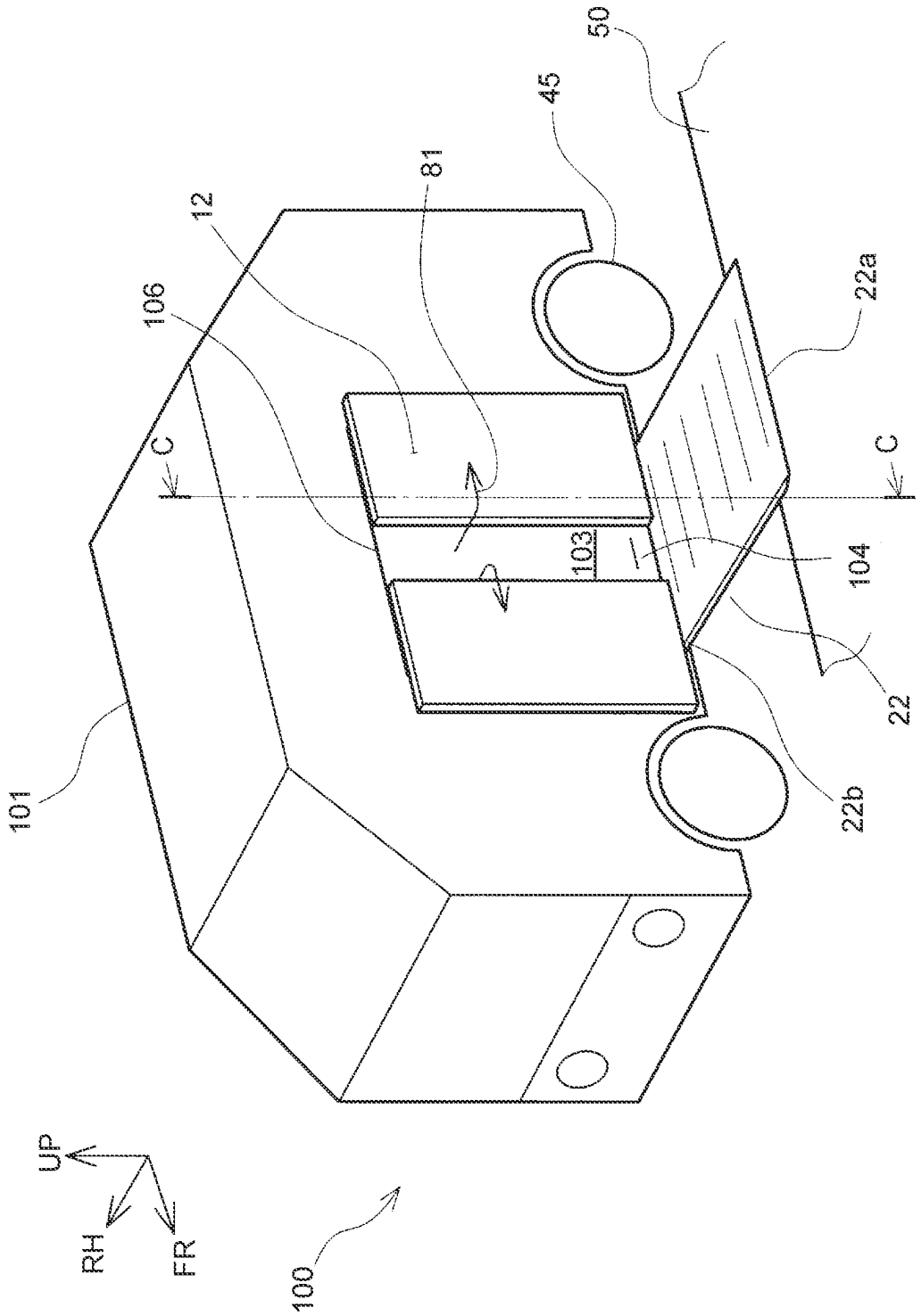

FIG. 9

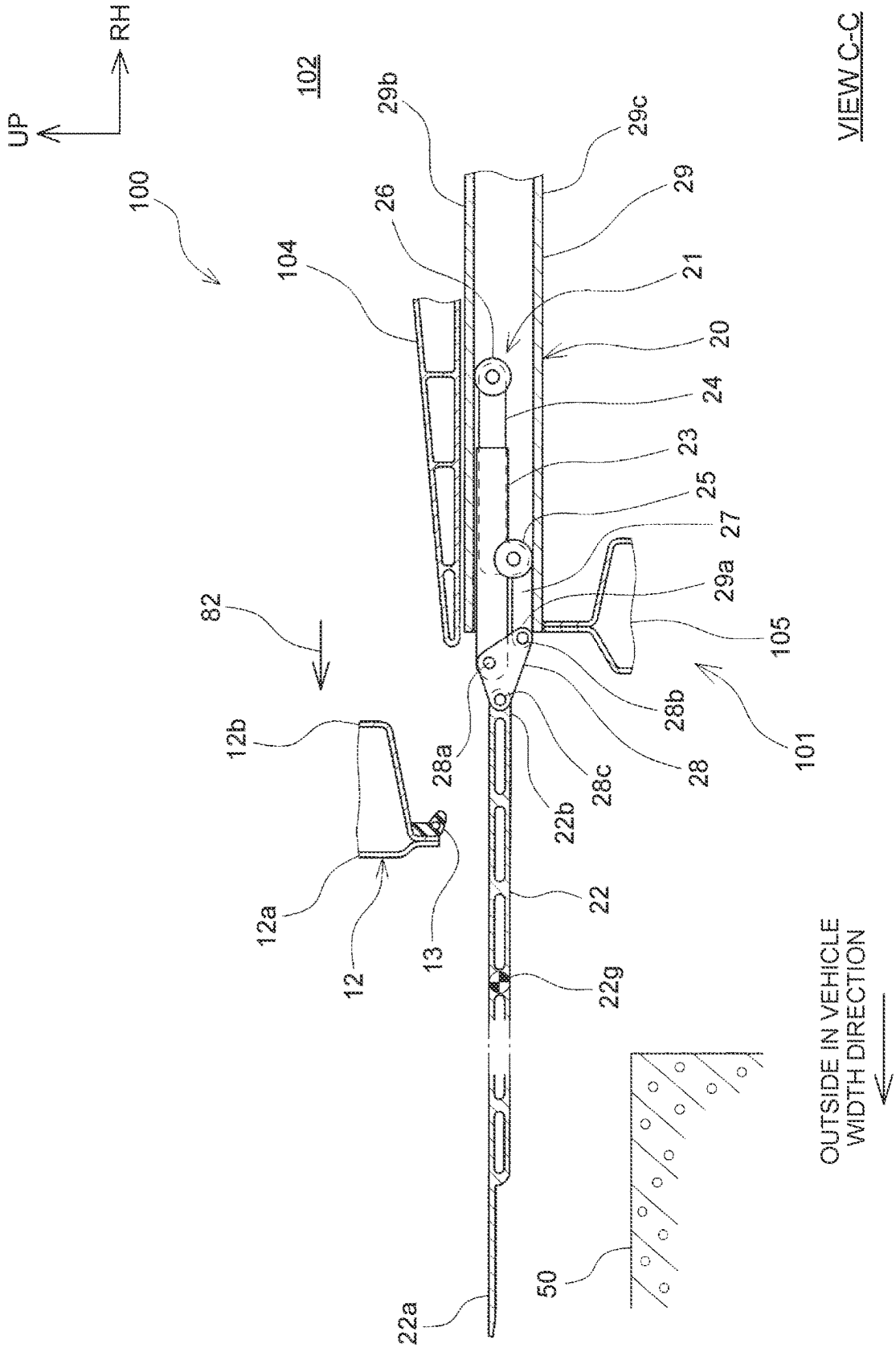
UP
RH
100
102
104
82
12b
12a
12
13
22a
50
22g
22
22b
28a
28c
28
28b
101
105
29a
27
25
23
24
20
21
29
26
29b
29c
VIEW C-C
OUTSIDE IN VEHICLE WIDTH DIRECTION

FIG. 10

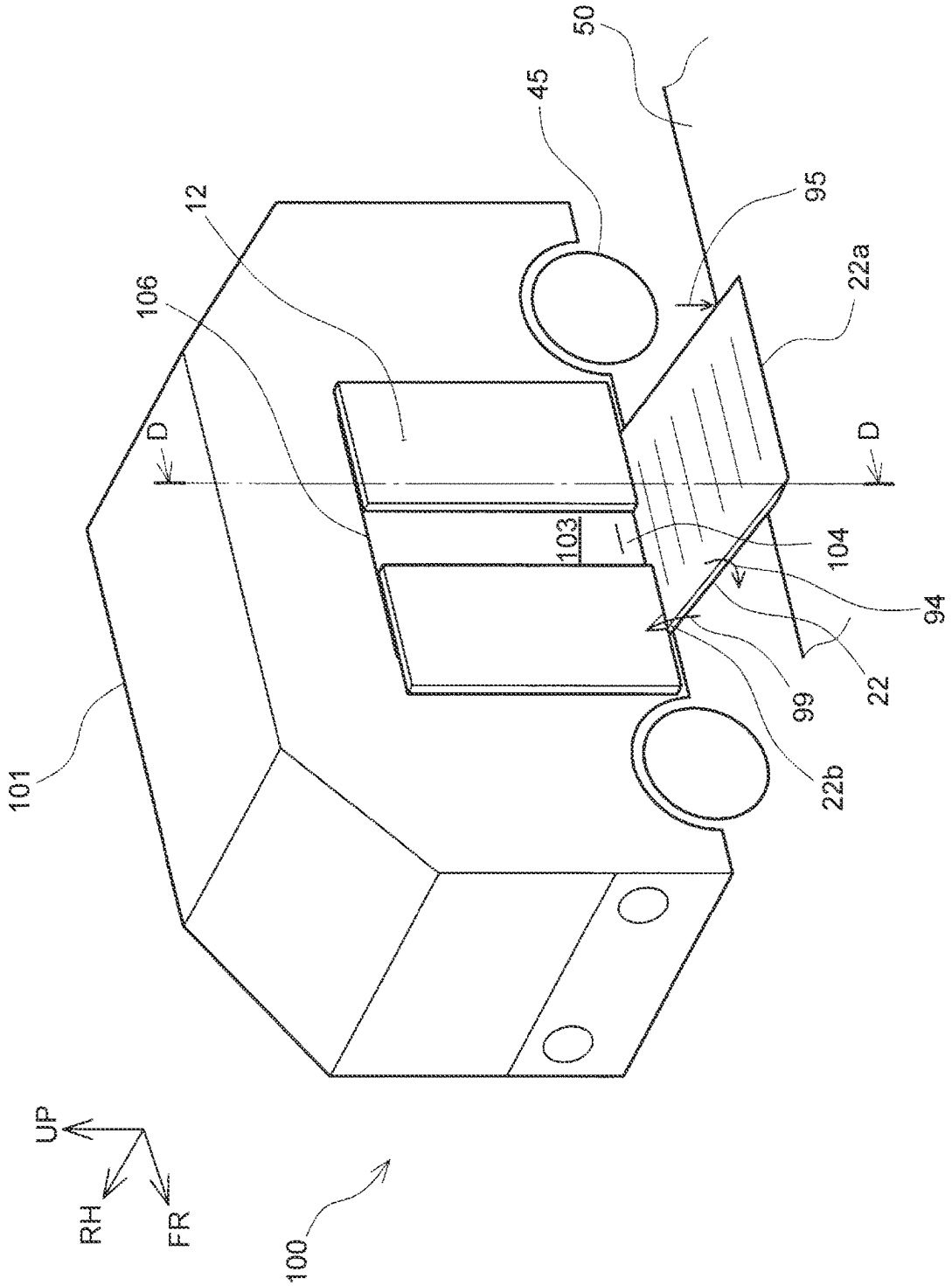

FIG. 11

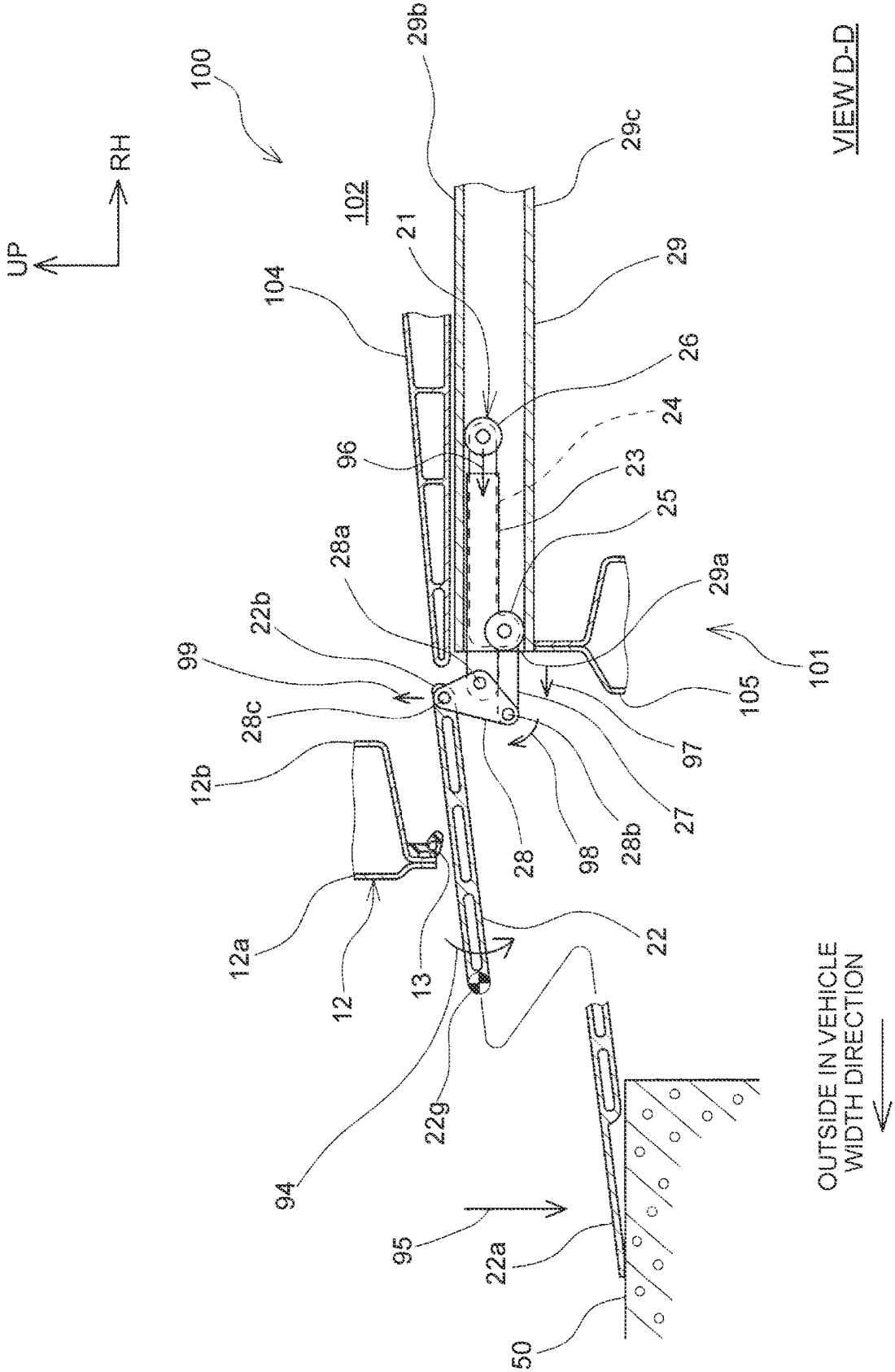
100
UP
RH
102
104
29b
29c
29
21
26
24
96
23
25
28a
29a
22b
99
101
105
28c
97
12b
27
28
98
28b
12a
12
13
22
22g
94
95
22a
50
VIEW D-D
OUTSIDE IN VEHICLE WIDTH DIRECTION

FIG. 12

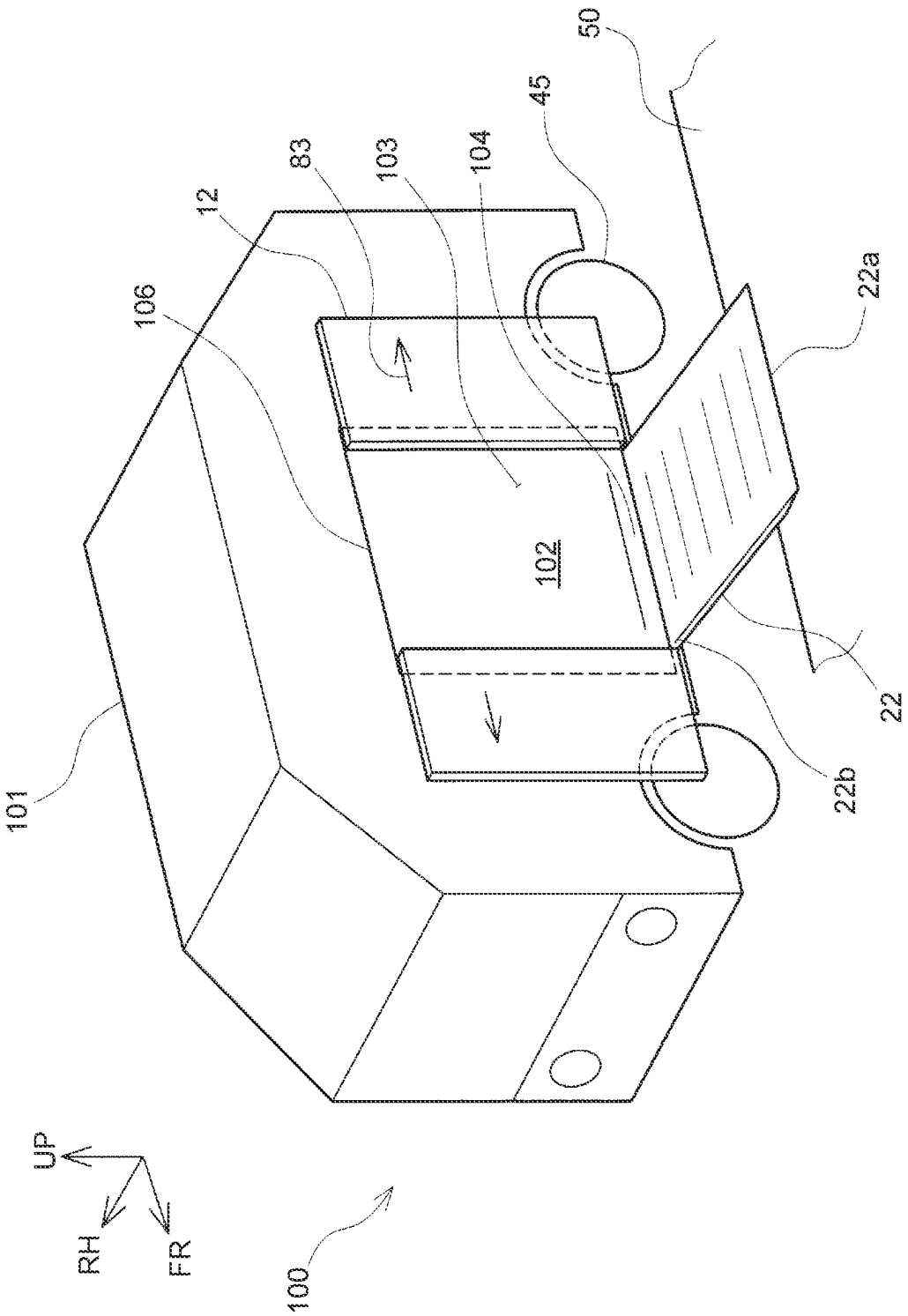

FIG. 13

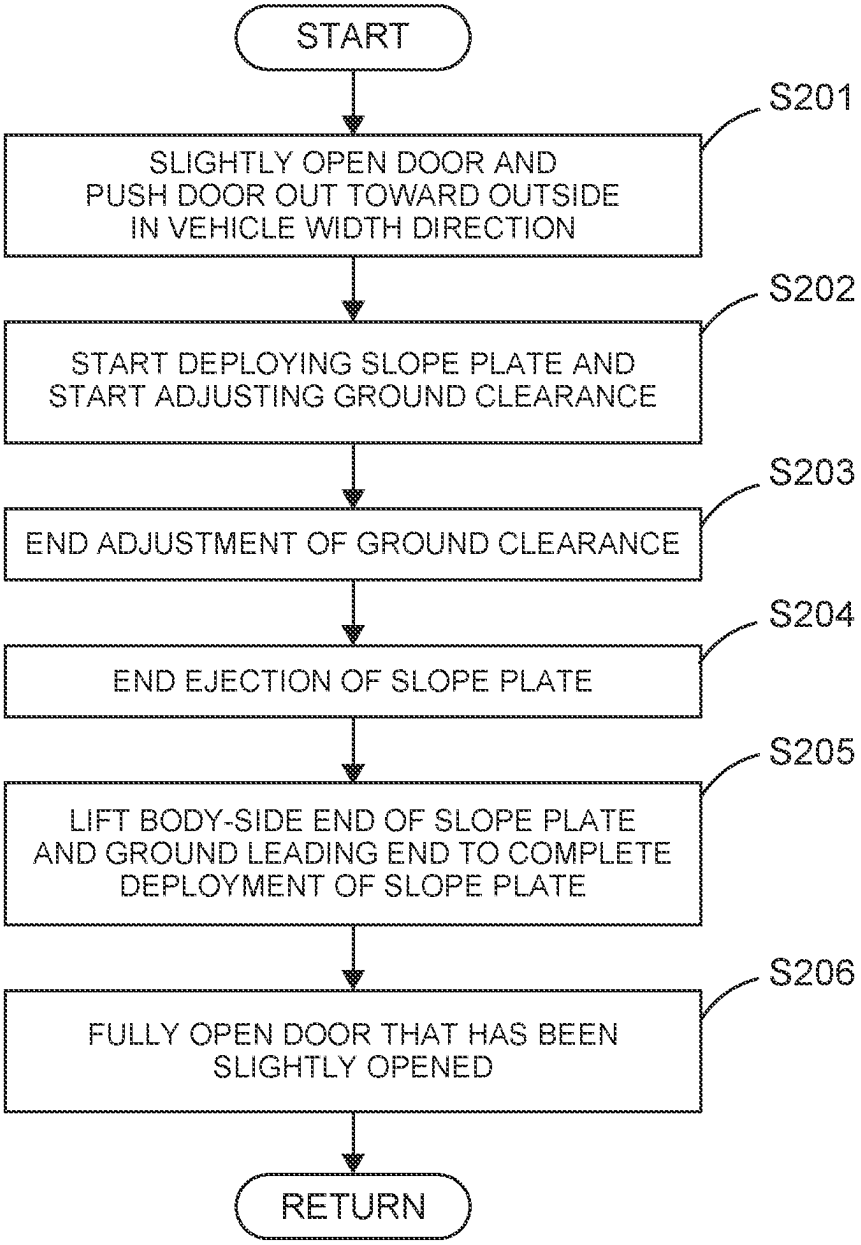
START
S201
SLIGHTLY OPEN DOOR AND PUSH DOOR OUT TOWARD OUTSIDE IN VEHICLE WIDTH DIRECTION
S202
START DEPLOYING SLOPE PLATE AND START ADJUSTING GROUND CLEARANCE
S203
END ADJUSTMENT OF GROUND CLEARANCE
S204
END EJECTION OF SLOPE PLATE
S205
LIFT BODY-SIDE END OF SLOPE PLATE AND GROUND LEADING END TO COMPLETE DEPLOYMENT OF SLOPE PLATE
S206
FULLY OPEN DOOR THAT HAS BEEN SLIGHTLY OPENED
RETURN

FIG. 14

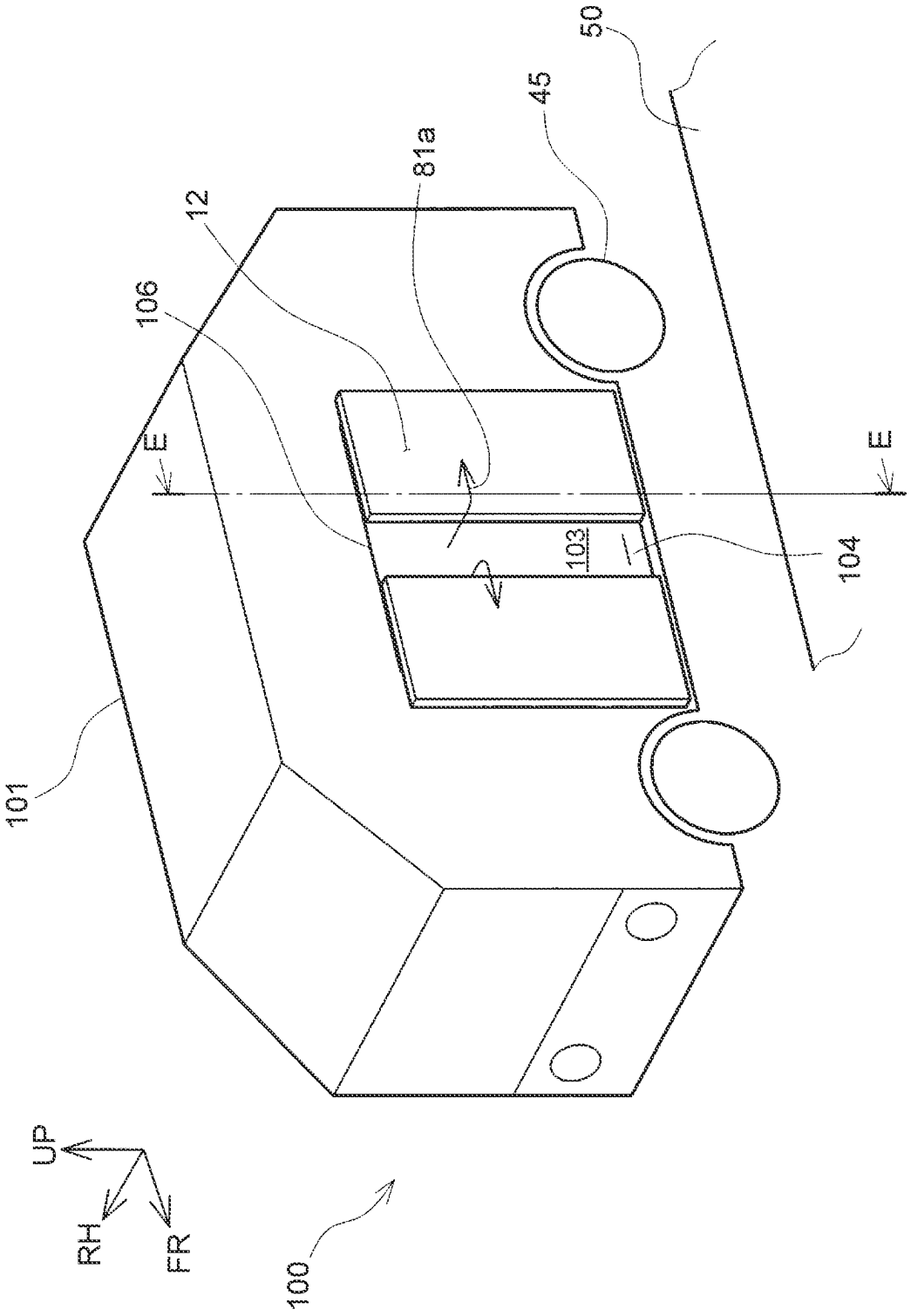

FIG. 15

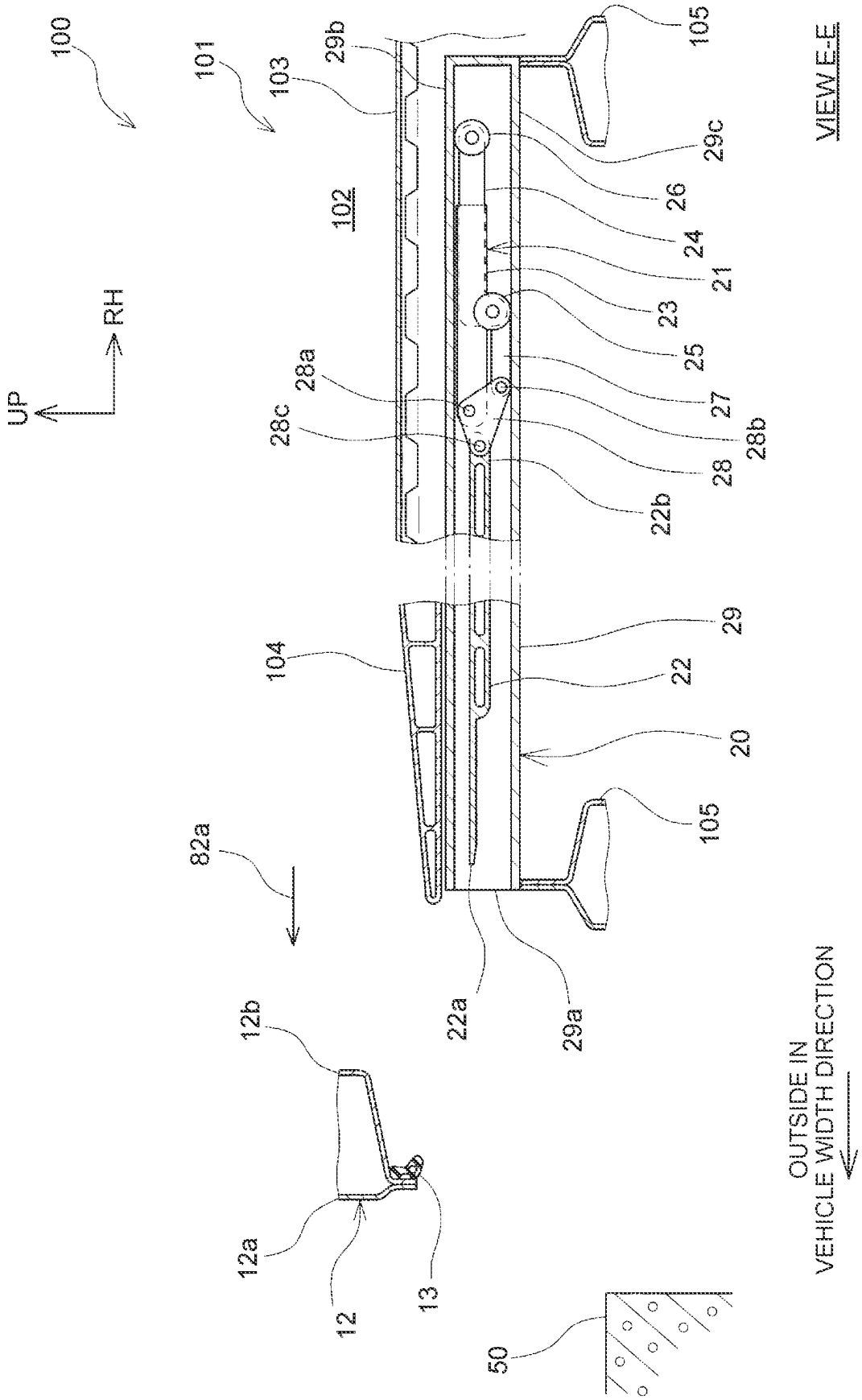
100
101
103
29b
105
VIEW E-E
29c
102
26
24
21
23
25
27
28b
28
22b
28a
28c
UP
RH
29
22
20
104
105
82a
22a
29a
12b
12a
12
13
50
OUTSIDE IN
VEHICLE WIDTH DIRECTION

FIG. 16

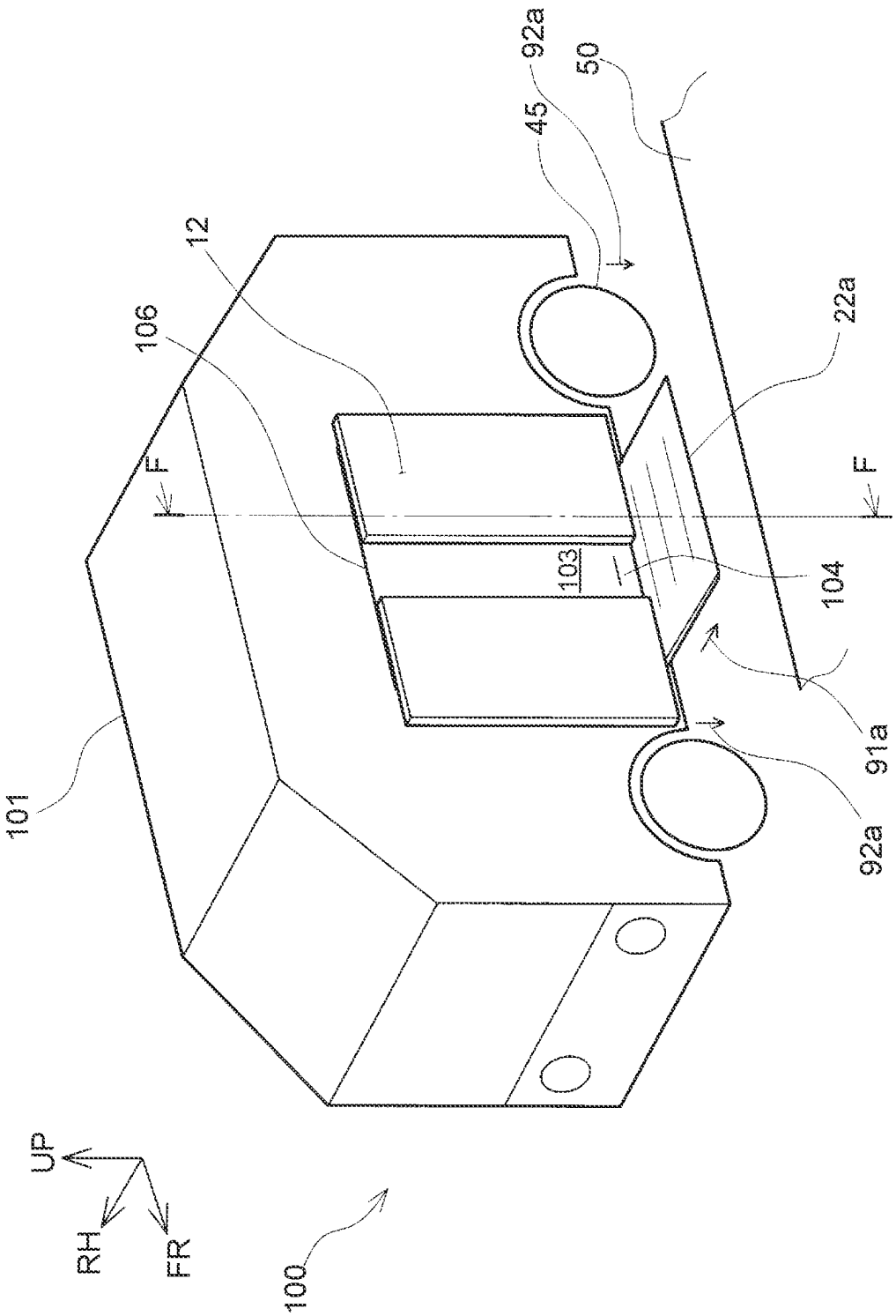

FIG. 17

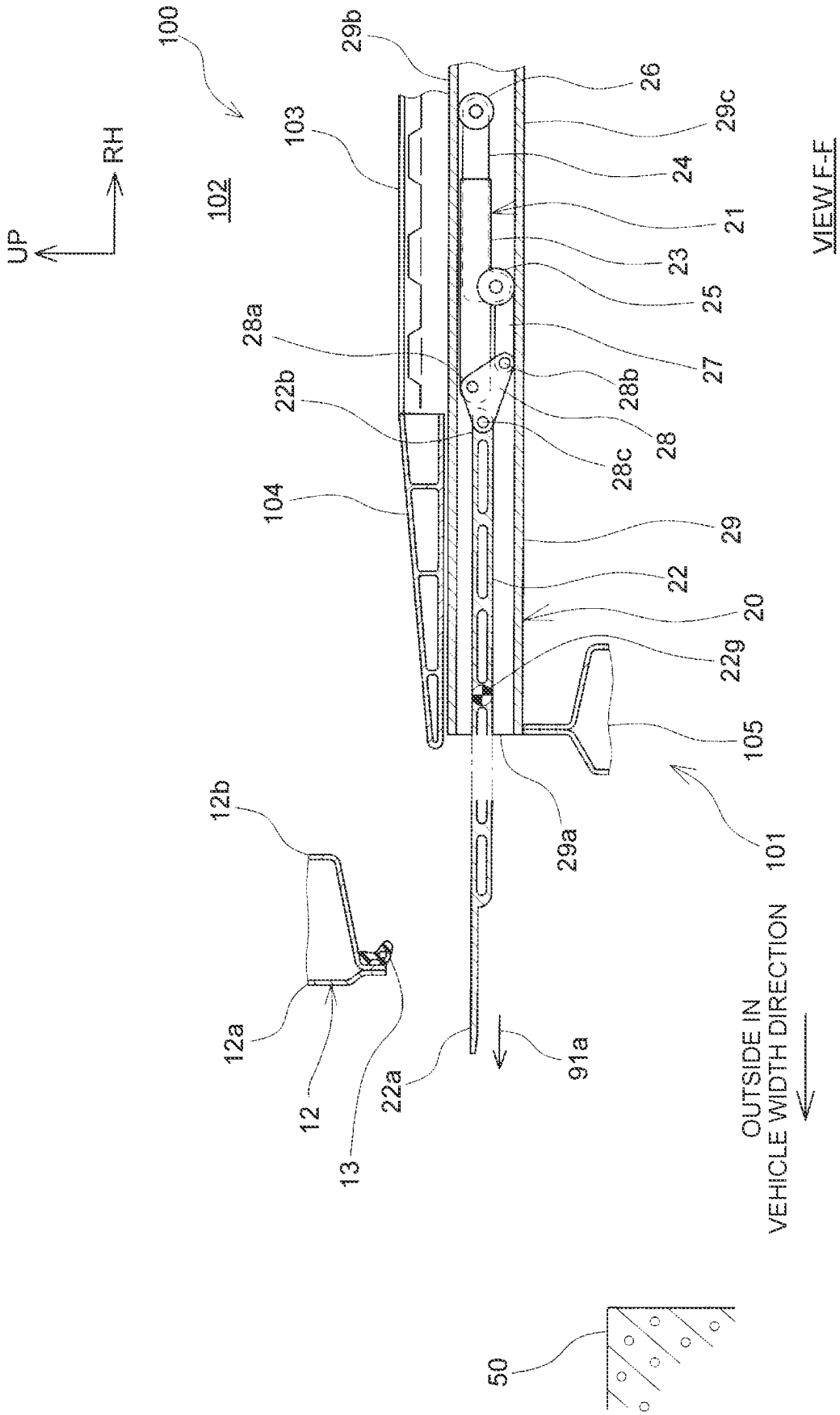
100
UP
RH
102
103
104
29b
26
29c
24
21
23
25
27
28a
22b
28b
28
28c
29
22
20
22g
105
101
29a
12b
12a
12
13
22a
91a
OUTSIDE IN
VEHICLE WIDTH DIRECTION
VIEW F-F
50

FIG. 18

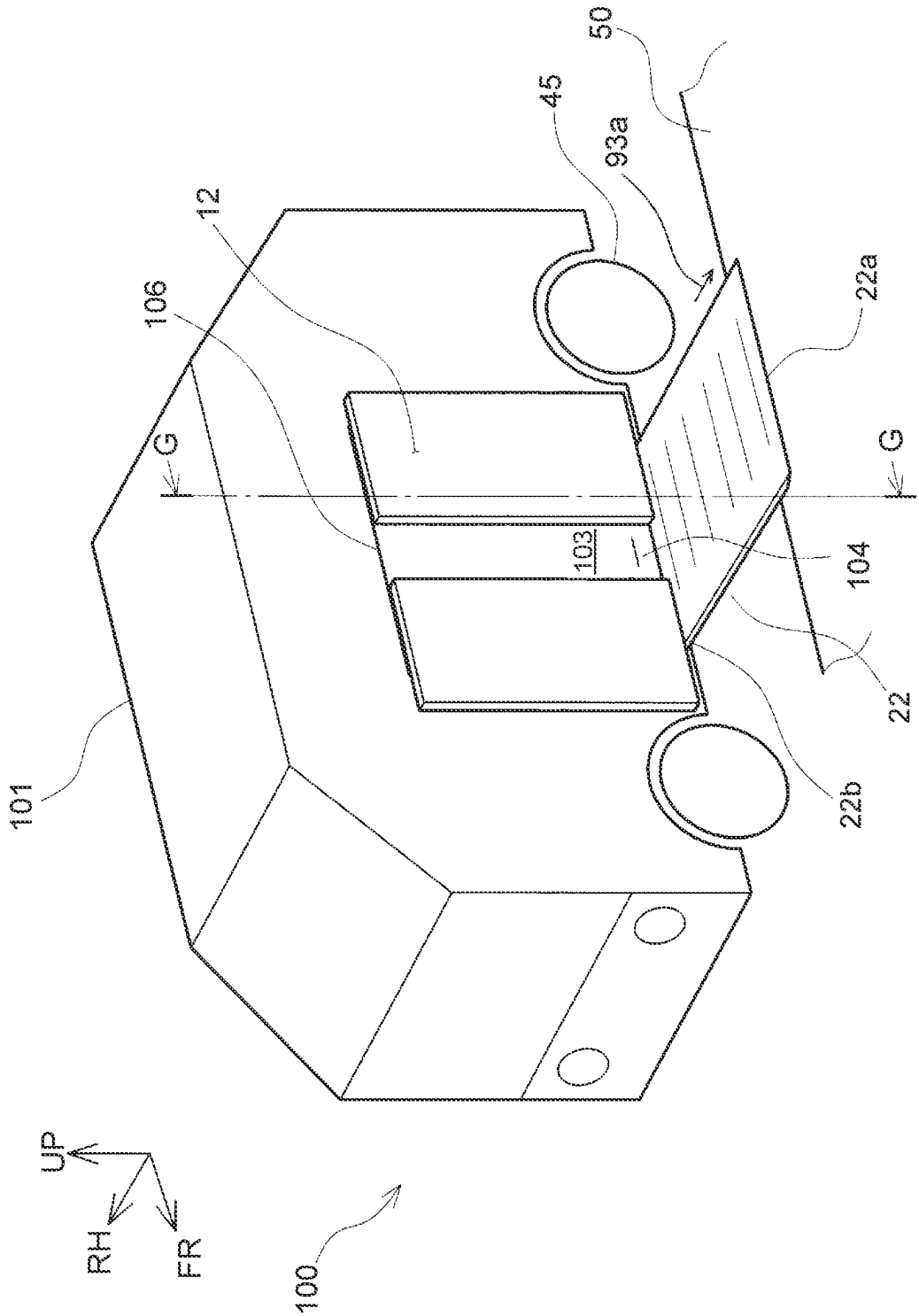

FIG. 19

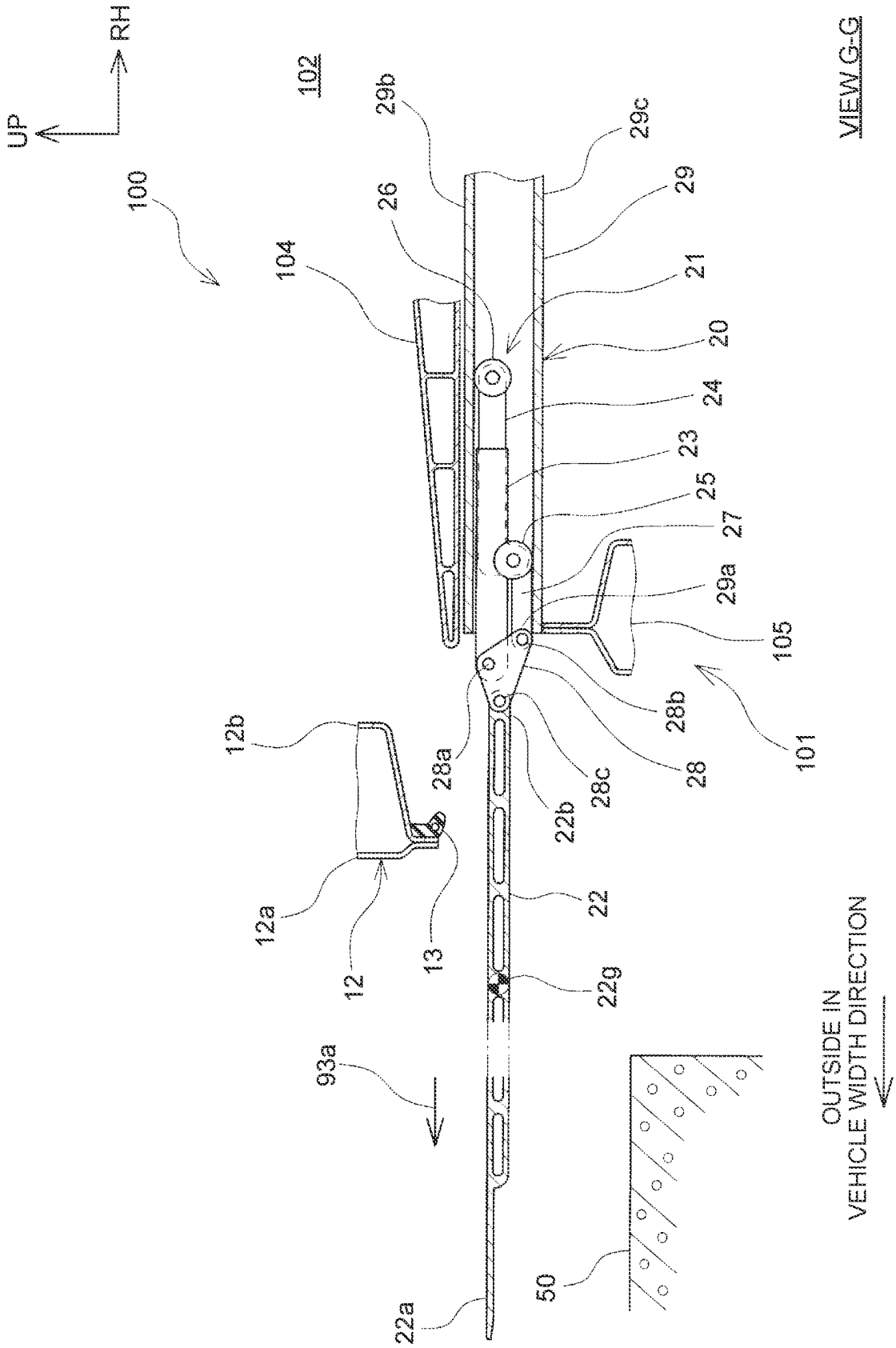
UP
RH
100
102
104
26
29b
29c
29
21
20
24
23
25
27
29a
105
101
28b
28
28c
22b
28a
12b
12a
12
13
22
22g
93a
22a
50
VIEW G-G
OUTSIDE IN
VEHICLE WIDTH DIRECTION

CONTROL DEVICE OF VEHICLE, VEHICLE, AND METHOD OF ACTIVATING DOOR TO OPEN AND CLOSE AND SLOPE PLATE TO DEPLOY

CROSS-REFERENCE TO RELATED APPLICATION

This application claims priority to Japanese Patent Application No. 2021-003189 filed on Jan. 13, 2021, incorporated herein by reference in its entirety.

BACKGROUND

1. Technical Field

The present disclosure relates to a configuration of a control device that is installed in a vehicle including a door and a slope plate to open and close the door and deploy the slope plate, a structure of a vehicle equipped with this control device, and a method of activating a door to open and close and a slope plate to deploy in a vehicle.

2. Description of Related Art

Recently, a structure has been disclosed in which a slope device is housed under an entrance of a vehicle and a slope plate is deployed to a lateral side of the vehicle to allow people in wheelchairs to get on and out of the vehicle more easily (e.g., see Japanese Unexamined Patent Application Publication No. 2019-116112 (JP 2019-116112 A)).

SUMMARY

In the electric vehicle described in JP 2019-116112 A, an opening through which the slope plate is deployed to the lateral side of the vehicle is covered by the door when the door is closed, and therefore the slope plate is deployed after the door is opened. Thus, there is a possibility that passengers may come into contact with the slope plate while the slope plate is deploying.

The present disclosure aims to reduce the likelihood that passengers may come into contact with a slope plate while the slope plate is deploying.

A control device of a vehicle of the present disclosure is installed in a vehicle including: a body having a vehicle cabin in which a passenger rides and a floor panel constituting a floor of the vehicle cabin; a door opening-closing mechanism that drives a door mounted on the body to open and close; and a slope deploying mechanism that deploys a slope plate housed under the floor panel to the outside of the body. The control device coordinates the operation of the door opening-closing mechanism and the slope deploying mechanism. The control device opens the door by the door opening-closing mechanism after deploying the slope plate toward the outside of the body by the slope deploying mechanism.

Thus, the door is opened after the slope plate is deployed, which can reduce the likelihood that passengers may come into contact with the slope plate while the slope plate is deploying.

The control device of the vehicle of the present disclosure may deploy the slope plate to the outside of the body by the slope deploying mechanism to eject the slope plate, push the door out toward the outside by the door opening-closing mechanism to slightly open the door, then immediately raise the slope plate by the slope deploying mechanism until an upper surface of a body-side end of the slope plate reaches the level of an upper surface of the floor panel, ground a leading end of the slope plate, and then fully open the door by the door opening-closing mechanism.

Thus, the door is fully opened after the positions of the leading end and the body-side end of the slope plate are established, which can reduce the likelihood that passengers may start to cross the slope plate before the position of the slope plate is established. In the control device of the vehicle of the present disclosure, either one of the two actions of ejecting the slope plate and slightly opening the door may be performed first or both actions may be performed at the same time.

The control device of the vehicle of the present disclosure may be installed in the vehicle that further includes a ground clearance adjusting mechanism that adjusts the ground clearance. When deploying the slope plate to the outside of the body by the slope deploying mechanism, the control device may reduce the ground clearance by the ground clearance adjusting mechanism.

Since the slope plate is deployed and the ground clearance is adjusted at the same time, even when the ground clearance needs to be adjusted, the time from when the vehicle stops until passengers start to get on and out of the vehicle can be shortened.

When deploying the slope plate to the outside of the body by the slope deploying mechanism, the control device of the vehicle of the present disclosure may reduce the ground clearance by the ground clearance adjusting mechanism before the position of the center of gravity of the slope plate is sent out to the outside of the body.

Since the ground clearance is adjusted with the leading end of the slope floating without being grounded, the action of deploying the slope plate and the action of adjusting the ground clearance are less likely to interfere with each other.

The control device of the vehicle of the present disclosure may deploy the slope plate to the outside of the body by the slope deploying mechanism and, at the same time, reduce the ground clearance by the ground clearance adjusting mechanism to eject the slope plate, push the door out toward the outside by the door opening-closing mechanism to slightly open the door, then immediately raise the slope plate by the slope deploying mechanism until an upper surface of a body-side end of the slope plate reaches the level of an upper surface of the floor panel, ground a leading end of the slope plate, and then fully open the door by the door opening-closing mechanism.

Since the slope plate is deployed and the ground clearance is adjusted at the same time, even when the ground clearance needs to be adjusted, the time from when the vehicle stops until passengers start to get on and out of the vehicle can be shortened. Moreover, since the door is fully opened after the positions of the leading end and the body-side end of the slope plate are established, passengers are less likely to start to cross the slope plate before the position of the slope plate is established.

A vehicle of the present disclosure includes: a body having a vehicle cabin in which a passenger rides and a floor panel constituting a floor of the vehicle cabin; a door opening-closing mechanism that drives a door mounted on the body to open and close; a slope deploying mechanism that deploys a slope plate housed under the floor panel to the outside of the body; and a control device that coordinates the operation of the door opening-closing mechanism and the slope deploying mechanism. The control device opens the

door by the door opening-closing mechanism after deploying the slope plate toward the outside of the body by the slope deploying mechanism.

In the vehicle of the present disclosure, the control device may deploy the slope plate to the outside of the body by the slope deploying mechanism to eject the slope plate, push the door out toward the outside by the door opening-closing mechanism to slightly open the door, then immediately raise the slope plate by the slope deploying mechanism until an upper surface of a body-side end of the slope plate reaches the level of an upper surface of the floor panel, ground a leading end of the slope plate, and then fully open the door by the door opening-closing mechanism. In the vehicle of the present disclosure, the control device may perform either one of the two actions of ejecting the slope plate and slightly opening the door first or perform both actions at the same time.

A method of activating a door to open and close and a slope plate to deploy of the present disclosure is a method of activating a door to open and close and a slope plate to deploy in a vehicle including: a body having a vehicle cabin in which a passenger rides and a floor panel constituting a floor of the vehicle cabin; a door opening-closing mechanism that drives a door mounted on the body to open and close; and a slope deploying mechanism that deploys a slope plate housed under the floor panel to the outside of the body. The method involves opening the door by the door opening-closing mechanism after deploying the slope plate toward the outside of the body by the slope deploying mechanism.

The method of activating a door to open and close and a slope plate to deploy of the present disclosure may involve deploying the slope plate to the outside of the body by the slope deploying mechanism to eject the slope plate, pushing the door out toward the outside by the door opening-closing mechanism to slightly open the door, then immediately raising the slope plate by the slope deploying mechanism until an upper surface of a body-side end of the slope plate reaches the level of an upper surface of the floor panel, grounding a leading end of the slope plate, and then fully opening the door by the door opening-closing mechanism. In the method of activating a door to open and close and a slope plate to deploy of the present disclosure, either one of the two actions of ejecting the slope plate and slightly opening the door may be performed first or both actions may be performed at the same time.

The present disclosure can reduce the likelihood that passengers may come into contact with a slope plate while the slope plate is deploying.

BRIEF DESCRIPTION OF THE DRAWINGS

Features, advantages, and technical and industrial significance of exemplary embodiments of the disclosure will be described below with reference to the accompanying drawings, in which like signs denote like elements, and wherein:

FIG. **1** is a perspective view of a vehicle equipped with a control device of an embodiment;

FIG. **2** is a sectional view showing details of a slope deploying mechanism installed in the vehicle shown in FIG. **1**, and is a section taken along line A-A shown in FIG. **1**;

FIG. **3** is a system diagram showing the configuration of a control system of the vehicle shown in FIG. **1**;

FIG. **4** is a flowchart showing an action of deploying a slope, an action of adjusting a ground clearance, and an action of opening a door that are performed by the control device of the vehicle of the embodiment;

FIG. **5** is a perspective view showing a state where a slope plate is being deployed and the ground clearance is being adjusted in the vehicle shown in FIG. **1**;

FIG. **6** is a sectional view taken along line B-B shown in FIG. **5**;

FIG. **7** is a sectional view taken along line B-B shown in FIG. **5**, in a state where the slope plate has been ejected;

FIG. **8** is a perspective view showing a state where the door is slightly opened after the slope plate has been ejected in the vehicle shown in FIG. **1**;

FIG. **9** is a sectional view taken along line C-C shown in FIG. **8**;

FIG. **10** is a perspective view showing a state where a body-side end of the slope plate is lifted and a leading end thereof is grounded on a sidewalk with the door slightly opened in the vehicle shown in FIG. **1**;

FIG. **11** is a sectional view taken along line D-D shown in FIG. **10**;

FIG. **12** is a perspective view showing a state where the slope plate is deployed and the door is fully opened in the vehicle shown in FIG. **1**;

FIG. **13** is a flowchart showing another operation by the control device of the vehicle of the embodiment;

FIG. **14** is a perspective view showing a state where the door is slightly opened in the vehicle shown in FIG. **1**;

FIG. **15** is a sectional view taken along line E-E shown in FIG. **14**;

FIG. **16** is a perspective view showing a state where the slope plate is being deployed and the ground clearance is being adjusted with the door slightly opened in the vehicle shown in FIG. **1**;

FIG. **17** is a sectional view taken along line F-F shown in FIG. **16**;

FIG. **18** is a perspective view showing a state where the slope plate has been ejected in the vehicle shown in FIG. **1**; and

FIG. **19** is a sectional view taken along line G-G shown in FIG. **18**.

DETAILED DESCRIPTION OF EMBODIMENTS

A vehicle **100** and a control device **40** installed in the vehicle **100** of an embodiment will be described below with reference to the drawings. Arrows FR, UP, RH shown in the drawings indicate a frontward direction (advancing direction), an upward direction, and a rightward direction, respectively, of the vehicle **100**. Directions opposite to the arrows FR, UP, RH indicate a rearward direction, a downward direction, and a leftward direction, respectively, of the vehicle. Unless otherwise noted, the directions front and rear, right and left, and up and down used alone in the following description mean front and rear in a vehicle front-rear direction, right and left in a vehicle right-left direction (vehicle width direction), and up and down in a vehicle height direction.

The vehicle **100** will be described as an electric vehicle in the following description, but the vehicle **100** is not limited thereto. As shown in FIG. **1**, the vehicle **100** includes a body **101**, a door device **10**, a slope device **20**, a ground clearance adjusting device **30**, the control device **40**, a driving motor **44**, a battery **43**, and wheels **45**. FIG. **1** shows a state where a door **12** of the vehicle **100** is closed and a slope plate **22** is housed.

The body **101** includes a vehicle cabin **102** which is symmetrical in the front-rear direction and in which passengers ride, and a floor panel **103** that constitutes a floor of the vehicle cabin **102**. The floor panel **103** of the vehicle

cabin **102** is flat and seats (not shown) for passengers to sit on are disposed inside the vehicle cabin **102**. A part between a left-side end of the floor panel **103** and an inner surface of the door **12** forms a step part **104** (see FIG. **2**) of which the level of an upper surface lowers from a front surface of the floor panel **103** toward the door **12**. The control device **40** is installed inside the body **101**.

The door device **10** is composed of the double door **12** that is provided on a side surface of the body **101** and slides along the side surface of the body **101**, and door opening-closing mechanisms **11** that open and close the door **12**. The door **12** is hung at an upper part, and one door opening-closing mechanism **11** is mounted at the upper part of each half of the double door **12**. The door opening-closing mechanism **11** includes a motor and a gear or a link. The door opening-closing mechanism **11** detects the degree of opening of the door **12** based on the position of the motor or the gear and outputs the detected degree of opening to an outside.

The slope device **20** is provided under the floor panel **103**. The slope device **20** will be described in detail later with reference to FIG. **2**. The ground clearance adjusting device **30** is composed of hydraulic cylinders **32** that are each mounted between a suspension (not shown) of a corresponding wheel **45** and a structural member (not shown) under the body **101**, and a ground clearance adjusting mechanism **31** that sends control oil to the hydraulic cylinders **32**. The ground clearance adjusting device **30** adjusts the ground clearance of the vehicle **100** as the ground clearance adjusting mechanism **31** adjusts the levels of the hydraulic cylinders **32**. The ground clearance adjusting mechanism **31** calculates the ground clearance based on the levels of the hydraulic cylinders **32** and outputs the calculated ground clearance to the outside. Instead of the hydraulic cylinders **32**, the ground clearance adjusting device **30** may include pneumatic cylinders.

The battery **43** is disposed next to the slope device **20** under the floor panel **103**. The driving motor **44** of the vehicle **100** is an in-wheel motor built inside the wheel **45**. Instead of being an in-wheel motor, the driving motor **44** may drive the wheel **45** by being installed in the body **101**.

Next, the detailed configuration of the slope device **20** will be described with reference to FIG. **2**. The slope device **20** is composed of a slope plate **22** that is deployed toward an outside of the body **101** in the vehicle width direction, a casing **29** that houses the slope plate **22**, and a slope deploying mechanism **21** that deploys and retracts the slope plate **22**. The casing **29** is a thin box mounted on rockers **105** that are disposed under the floor panel **103**, on both sides of the body **101**, and an opening **29***a* through which the slope plate **22** is moved in and out is provided at an end of the casing **29** on the vehicle left side where the door **12** is provided.

The slope deploying mechanism **21** is composed of a slider main body **24**, a connection body **23**, a rotary link **28**, and a connection bar **27**. The slider main body **24** has rollers **25**, **26** mounted at ends thereof on the vehicle left side and the vehicle right side that are ends in a deploying direction of the slope plate **22**, so as to be rotatable relatively to the slider main body **24**. The roller **25** at the end on the vehicle left side is mounted on the lower side relatively to the center of the slider main body **24** in the up-down direction, and a lower side of the roller **25** is in contact with an inner surface of a bottom plate **29***c* of the casing **29**. Meanwhile, the roller **26** at the end on the vehicle right side is mounted on the slider main body **24** such that an upper side of the roller **26** is in contact with an inner surface of a top plate **29***b* of the casing **29**. The slider main body **24** is connected to a motor and a gear device that are disposed inside the casing **29**, and moves in the vehicle width direction as the motor rotates. The motor and the gear device are not shown. The slope deploying mechanism **21** detects the position of deployment of the slope plate **22** based on the position of the motor or the gear and outputs the detected position of deployment to the outside.

The connection body **23** is mounted at the vehicle right side on the slider main body **24** so as to be movable in the vehicle width direction relatively to the slider main body **24**. The rotary link **28** is rotatably mounted with a pin **28***a* at an end of the connection body **23** on the vehicle left side. A body-side end **22***b* of the slope plate **22** is rotatably connected with a pin **28***c* to a left-side end of the rotary link **28**. A right-side end of the rotary link **28** and a left-side end of the slider main body **24** are connected to each other by the connection bar **27**. A left-side end of the connection bar **27** is rotatably connected with a pin **28***b* to the right-side end of the rotary link **28**.

The slope plate **22** is a plate-shaped member and is connected at the body-side end **22***b* to the slider main body **24** through the rotary link **28** and the connection body **23**. A leading end **22***a* of the slope plate **22** has a smaller plate thickness.

As shown in FIG. **2**, the door **12** is composed of a door outer panel **12***a* and a door inner panel **12***b*, and a weather seal **13** is mounted at a lower end of the door **12**. A lip of the weather seal **13** is disposed so as to be located on the upper side relatively to the top plate **29***b* of the casing **29** of the slope device **20**, and in a state where the door **12** is closed, a tip of the lip of the weather seal **13** is in contact with a left-side end of the step part **104** of the floor panel **103**. Thus, the slope plate **22** can be deployed to the outside in the vehicle width direction with the door **12** closed.

As shown in FIG. **3**, the door opening-closing mechanism **11**, the slope deploying mechanism **21**, the ground clearance adjusting mechanism **31**, the battery **43**, and the driving motor **44** are connected to the control device **40** and operate in accordance with commands from the control device **40**. Data on the degree of opening of the door output by the door opening-closing mechanism **11**, data on the position of deployment of the slope output by the slope deploying mechanism **21**, and data on the ground clearance output by the ground clearance adjusting mechanism **31** are input into the control device **40**.

The control device **40** is a computer internally including a CPU **41** that processes information and a memory **42** that stores control programs, control data, etc.

Next, the operation of the control device **40** installed in the vehicle **100** will be described with reference to FIG. **4** to FIG. **12**.

When the vehicle **100** stops at a predetermined place, such as a bus stop, where passengers get on and out of the vehicle **100**, as shown in step S**101** of FIG. **4**, the CPU **41** of the control device **40** outputs a command for starting to deploy the slope plate **22** to the slope deploying mechanism **21**. Further, the CPU **41** of the control device **40** outputs a command for reducing the ground clearance of the vehicle **100** to the ground clearance adjusting mechanism **31**. In accordance with the command from the control device **40**, the slope deploying mechanism **21** drives a built-in motor to move the slider main body **24** toward the vehicle left side as shown in FIG. **5** and FIG. **6**. Here, the slider main body **24** and the connection body **23** are prevented by a lock mechanism (not shown) from moving relatively to each other in the vehicle width direction, and the slider main body **24** and the

connection body **23** move integrally toward the vehicle left side. When the slider main body **24** and the connection body **23** have moved toward the left side, as indicated by arrow **91** in FIG. **5** and FIG. **6**, the leading end **22***a* of the slope plate **22** is sent out through the opening **29***a* of the casing **29** toward the outside in the vehicle width direction. Thus, the slope plate **22** is ejected toward the outside in the vehicle width direction. While a position **22***g* of the center of gravity of the slope plate **22** in the vehicle width direction is inside the casing **29**, the slope plate **22** is deployed substantially horizontally toward the outside in the vehicle width direction. During this process, the slope deploying mechanism **21** outputs a signal indicating the position of deployment of the slope plate **22** to the control device **40**, and the control device **40** ejects and deploys the slope plate **22** while detecting the position of deployment of the slope plate **22**.

Meanwhile, the ground clearance adjusting mechanism **31** reduces the oil pressures of the hydraulic cylinders **32** and lowers the levels of the hydraulic cylinders **32** in accordance with the command from the control device **40**. During this process, the ground clearance adjusting mechanism **31** detects the ground clearance and outputs the detected ground clearance to the control device **40**, and the control device **40** reduces the ground clearance as indicated by arrows **92** in FIG. **5** while detecting the ground clearance. When the ground clearance has been reduced to a predetermined clearance, the control device **40** ends the adjustment of the ground clearance as shown in step S**102** of FIG. **4**.

The time taken to adjust the ground clearance is about one third of the time taken to deploy the slope plate **22**. Therefore, when the control device **40** has adjusted the ground clearance by the ground clearance adjusting mechanism **31**, about one third of the slope plate **22** has been ejected through the opening **29***a* of the casing **29** to the outside in the vehicle width direction while about two thirds thereof are still housed inside the casing **29**. Thus, as shown in FIG. **6**, when the ground clearance has been adjusted, the position **22***g* of the center of gravity of the slope plate **22** is located inside the casing **29** and the slope plate **22** is being deployed substantially horizontally toward the outside in the vehicle width direction.

Also after the ground clearance has been adjusted, the control device **40** continues the action of ejecting the slope plate **22** to deploy the slope plate **22** to the outside in the vehicle width direction as indicated by arrow **93** in FIG. **7**. When the position **22***g* of the center of gravity of the slope plate **22** reaches the outside of the opening **29***a* of the casing **29** in the vehicle width direction, the body-side end **22***b* of the slope plate **22** is engaged with a lock mechanism (not shown) and thereby locked so as not to rotate around the pin **28***c*. Then, ejection of the slope plate **22** in the substantially horizontal direction continues.

As shown in step S**103** of FIG. **4** and FIG. **7**, when the slope plate **22** has been ejected to the outside in the vehicle width direction, the rotary link **28** has protruded through the opening **29***a* to the outside in the vehicle width direction. The connection body **23** is engaged with an engaging member (not shown) of the casing **29** and locked on the casing **29** so as not to move further toward the outside in the vehicle width direction. When the rotary link **28** protrudes through the opening **29***a* toward the outside in the vehicle width direction, the lock mechanism (not shown) between the slider main body **24** and the connection body **23** is released, so that the slider main body **24** becomes able to move relatively to the connection body **23** in the vehicle width direction. Here, the body-side end **22***b* of the slope plate **22** remains in the state of being locked by the lock mechanism (not shown) so as not to rotate around the pin **28***c*.

When the slope plate **22** has been ejected to the outside in the vehicle width direction, the control device **40** starts opening the door **12** as shown in step S**104** of FIG. **4**. As shown in FIG. **8** and FIG. **9**, the control device **40** outputs a command for slightly opening the door **12** to the door opening-closing mechanism **11**. Based on this command, the door opening-closing mechanism **11** rotates the motor to slightly open the door **12**.

As shown in FIG. **8**, the door **12** is pushed out toward the outside in the vehicle width direction and slightly opened in the vehicle front-rear direction as indicated by arrows **81** in FIG. **8** and arrow **82** in FIG. **9** by a guide rail (not shown) and a link (not shown) of the door **12**. As shown in FIG. **9**, when the door **12** is slightly opened, the door **12** is pushed out toward the outside in the vehicle width direction and a gap is left between the tip of the seal lip of the weather seal **13** mounted at the lower end of the door **12** and the end of the step part **104** on the vehicle left side.

After slightly opening the door **12** so as to leave a gap between the tip of the seal lip of the weather seal **13** and the end of the step part **104** on the vehicle left side as shown in step S**104** of FIG. **4**, the control device **40** lifts the body-side end **22***b* of the slope plate **22** as shown in step S**105** of FIG. **4**. The control device **40** outputs a command for lifting the body-side end **22***b* of the slope plate **22** to the slope deploying mechanism **21**. When this command is input, the slope deploying mechanism **21** rotates the motor to move the slider main body **24** toward the outside in the vehicle width direction relatively to the connection body **23**.

As described above, the connection body **23** is locked on the casing **29** so as not to move toward the outside in the vehicle width direction, while the slider main body **24** is movable toward the outside in the vehicle width direction relatively to the connection body **23**. Therefore, when the slider main body **24** moves toward the outside in the vehicle width direction as the motor rotates, the slider main body **24** enters inside the connection body **23** and moves toward the outside in the vehicle width direction as shown in FIG. **11**. This causes the connection bar **27** of the slider main body **24** to move toward the outside in the vehicle width direction and thereby move the pin **28***b* toward the outside in the vehicle width direction, which in turn causes the rotary link **28** to rotate clockwise as indicated by arrow **98** in FIG. **11**. As the rotary link **28** thus rotates, the pin **28***c* thereof moves upward as indicated by arrow **99** in FIG. **11**. As a result, the body-side end **22***b* of the slope plate **22** connected to the pin **28***c* moves upward.

When the slider main body **24** moves as shown in FIG. **11**, the body-side end **22***b* of the slope plate **22** is disengaged from the lock mechanism and the slope plate **22** becomes able to rotate around the pin **28***c*. Since the position **22***g* of the center of gravity of the slope plate **22** is located on the outside of the opening **29***a* of the casing **29** in the vehicle width direction, when disengaged from the lock mechanism, the body-side end **22***b* of the slope plate **22** rotates around the pin **28***c* as indicated by arrow **94** shown in FIG. **10** and FIG. **11** such that the leading end **22***a* lowers. Then, as indicated by arrow **95** in FIG. **10** and FIG. **11**, the leading end **22***a* of the slope plate **22** moves downward and the leading end **22***a* is grounded on a sidewalk **50**.

The control device **40** moves the slider main body **24** toward the outside in the vehicle width direction until an upper surface of the body-side end **22***b* of the slope plate **22** becomes substantially flush with an upper surface of the step

part **104** of the floor panel **103**. When the upper surface of the body-side end **22***b* of the slope plate **22** becomes substantially flush with the upper surface of the step part **104**, the control device **40** stops lifting the body-side end **22***b* of the slope plate **22**. Thus, deployment of the slope plate **22** has been completed.

Upon completion of lifting, the control device **40** moves to step S**106** of FIG. **4** and outputs a command for fully opening the door **12** that has been slightly opened to the door opening-closing mechanism **11**. In accordance with this command, the door opening-closing mechanism **11** fully opens the door **12** as indicated by arrows **83** in FIG. **12**. When the door **12** is fully opened, the vehicle cabin **102** with the flat floor panel **103** and an entrance **106** of the body **101** through which passengers get on and out of the vehicle are revealed. Passengers climb into the vehicle cabin **102** by crossing the slope plate **22** from the sidewalk **50**.

As has been described above, the control device **40** of the vehicle **100** of the embodiment slightly opens the door **12** after ejecting the slope plate **22**, which can reduce the likelihood that passengers may come into contact with the slope plate **22** while the slope plate **22** is deploying. Further, the control device **40** of the embodiment fully opens the door **12** after raising the slope plate **22**, with the door **12** slightly opened, until the upper surface of the body-side end **22***b* of the slope plate **22** reaches the level of the upper surface of the step part **104** of the floor panel **103** and thus matching the levels of these upper surfaces. In other words, the control device **40** fully opens the door **12** after creating a state where the slope plate **22** has been deployed and there is no level difference between the upper surface of the slope plate **22** and the upper surface of the step part **104**. Thus, passengers are less likely to start to cross the slope plate **22** before the position of the slope plate **22** is established. Moreover, even when passengers start to cross the slope plate **22** while the door **12** is not yet fully opened, they are less likely to trip due to a level difference.

Since the control device **40** of the embodiment deploys the slope plate **22** and adjusts the ground clearance at the same time, even when the ground clearance needs to be adjusted, the time from when the vehicle **100** stops until passengers start to get on and out of the vehicle **100** can be shortened. Further, when ejecting and deploying the slope plate **22** to the outside of the body **101** by the slope deploying mechanism **21**, the control device **40** completes the adjustment of the ground clearance by the ground clearance adjusting mechanism **31** before the position **22***g* of the center of gravity of the slope plate **22** is sent out to the outside of the body **101**. Thus, the ground clearance is adjusted with the leading end **22***a* of the slope plate **22** floating without being grounded, which can reduce the likelihood of interference between the action of deploying the slope plate **22** and the action of adjusting the ground clearance. Moreover, the control device **40** completes the adjustment of the ground clearance by the ground clearance adjusting mechanism **31** before the action of deploying the slope plate **22** is completed. Thus, the ground clearance is adjusted in a state where the body-side end **22***b* of the slope plate **22** is engaged with the lock mechanism (not shown) and thereby locked so as not to rotate around the pin **28***c*, and where the slope plate **22** extends in a substantially horizontal direction and the leading end **22***a* of the slope plate **22** is not grounded. This can reduce the likelihood of interference between the action of deploying the slope plate **22** and the action of adjusting the ground clearance.

Next, another operation of the control device **40** installed in the vehicle **100** will be described with reference to FIG. **13** to FIG. **19**. This operation is an operation in which the door **12** is slightly opened first and then the slope plate **22** is deployed and the ground clearance is adjusted, and when the slope plate **22** has been ejected, the body-side end **22***b* of the slope plate **22** is lifted. Actions that are the same as those described with reference to FIG. **4** to FIG. **12** will be described in a simplified manner.

When the vehicle **100** stops at a predetermined place, such as a bus stop, where passengers get on and out of the vehicle **100**, the CPU **41** of the control device **40** slightly opens the door **12** as shown in step S**201** of FIG. **13**. The control device **40** outputs a command for slightly opening the door **12** to the door opening-closing mechanism **11**. In accordance with this command, the door opening-closing mechanism **11** rotates the motor and slightly opens the door **12** as shown in FIG. **14** and FIG. **15**. Details of an action after slightly opening the door **12** are the same as the action in step S**104** of FIG. **4** described above.

As shown in FIG. **14** and FIG. **15**, the door **12** is pushed out toward the outside in the vehicle width direction and slightly opened in the vehicle front-rear direction as indicated by arrows **81***a* in FIG. **14** and arrow **82***a* in FIG. **15** by the guide rail (not shown) and the link (not shown) of the door **12**. As shown in FIG. **15**, when the door **12** is slightly opened, the door **12** is pushed out toward the outside in the vehicle width direction and a gap is left between the tip of the seal lip of the weather seal **13** mounted at the lower end of the door **12** and the end of the step part **104** on the vehicle left side.

After slightly opening the door **12** so as to leave a gap between the tip of the seal lip of the weather seal **13** and the end of the step part **104** on the vehicle left side, the CPU **41** of the control device **40** outputs a command for starting to deploy the slope plate **22** to the slope deploying mechanism **21** as shown in step S**202** of FIG. **13**. Further, the CPU **41** of the control device **40** outputs a command for reducing the ground clearance of the vehicle **100** to the ground clearance adjusting mechanism **31**. Accordingly, as in step S**101** of FIG. **4** described above, the slope deploying mechanism **21** sends out the leading end **22***a* of the slope plate **22** through the opening **29***a* of the casing **29** toward the outside in the vehicle width direction as indicated by arrow **91***a* in FIG. **16** and FIG. **17**. Thus, the slope plate **22** is ejected toward the outside in the vehicle width direction. The ground clearance adjusting mechanism **31** reduces the ground clearance as indicated by arrows **92***a* in FIG. **16**. When the ground clearance has been reduced to a predetermined clearance, the control device **40** ends the adjustment of the ground clearance as shown in step S**203** of FIG. **13**.

As shown in FIG. **18** and FIG. **19**, also after the ground clearance has been adjusted, the CPU **41** of the control device **40** continues the action of ejecting the slope plate **22** to deploy the slope plate **22** to the outside in the vehicle width direction as indicated by arrow **93***a* in FIG. **18** and FIG. **19**. Here, the slope plate **22** is ejected substantially horizontally as described above with reference to FIG. **7**.

When the slope plate **22** has been ejected to the outside in the vehicle width direction as shown in step S**204** of FIG. **13**, the CPU **41** of the control device **40** moves to step S**205** of FIG. **13**. By the same actions as in step S**105** of FIG. **4** described above, the CPU **41** lifts the body-side end **22***b* of the slope plate **22** and grounds the leading end **22***a* of the slope plate **22** to complete the deployment of the slope plate **22**.

When deployment of the slope plate **22** is completed, the CPU **41** of the control device **40** moves to step S**206** of FIG.

13, and fully opens the door **12** by the same action as in step S**106** of FIG. **4** described above.

In this way, the control device **40** fully opens the door **12** after creating a state where the slope plate **22** has been deployed and there is no level difference between the upper surface of the slope plate **22** and the upper surface of the step part **104**. Thus, passengers are less likely to start to cross the slope plate **22** before the position of the slope plate **22** is established.

In the operation of the control device **40** having been described above, the slope plate **22** is deployed and the ground clearance is adjusted after the door **12** is slightly opened. However, the operation is not limited to this example. For example, deployment of the slope plate **22** and adjustment of the ground clearance may be started at the same time as the door **12** is slightly opened. Alternatively, adjustment of the ground clearance may be started at the same time as the door **12** is slightly opened, and deployment of the slope plate **22** may be started after the door **12** is slightly opened. Or deployment of the slope plate **22** may be started at the same time as the door **12** is slightly opened, and adjustment of the ground clearance may be started after the door **12** is slightly opened.

In the vehicle **100** having been described above, the control device **40** performs the action of deploying the slope plate **22** and the action of opening the door **12**. However, without being limited to this example, deployment of the slope plate **22** and opening of the door **12** may be performed by manual operation or the like. In this case, the following method of activating the door **12** to open and close and the slope plate **22** to deploy can be used.

A method of activating the door **12** to open and close and the slope plate **22** to deploy of the embodiment is used in the vehicle **100** including: the body **101** having the vehicle cabin **102** in which passengers ride and the floor panel **103** constituting the floor of the vehicle cabin **102**; the door opening-closing mechanism **11** that drives the door **12** mounted on the body **101** to open and close; and the slope deploying mechanism **21** that deploys the slope plate **22** housed under the floor panel **103** to the outside of the body **101**. The method of activating the door **12** to open and close and the slope plate **22** to deploy involves opening the door **12** by the door opening-closing mechanism **11** after deploying the slope plate **22** toward the outside of the vehicle **100** by the slope deploying mechanism **21**.

This method of activating the door **12** to open and close and the slope plate **22** to deploy may involve deploying the slope plate **22** to the outside of the body **101** by the slope deploying mechanism **21** to eject the slope plate **22**, pushing the door **12** out toward the outside by the door opening-closing mechanism **11** to slightly open the door, then immediately raising the slope plate **22** by the slope deploying mechanism **21** until the upper surface of the body-side end **22***b* of the slope plate **22** reaches the level of the upper surface of the step part **104** of the floor panel **103**, grounding the leading end **22***a* of the slope plate **22**, and then fully opening the door **12** by the door opening-closing mechanism **11**.

Further, this method of activating the door **12** to open and close and the slope plate **22** to deploy may involve pushing the door **12** out toward the outside by the door opening-closing mechanism **11** to slightly open the door, deploying the slope plate **22** to the outside of the body **101** by the slope deploying mechanism **21** to eject the slope plate **22**, then immediately raising the slope plate **22** by the slope deploying mechanism **21** until the upper surface of the body-side end **22***b* of the slope plate **22** reaches the level of the upper surface of the step part **104** of the floor panel **103**, grounding the leading end **22***a* of the slope plate **22**, and then fully opening the door **12** by the door opening-closing mechanism **11**.

In this method of activating the door **12** to open and close and the slope plate **22** to deploy, deployment of the slope plate **22** and adjustment of the ground clearance may be started at the same time as the door **12** is slightly opened. Alternatively, adjustment of the ground clearance may be started at the same time as the door **12** is slightly opened, and deployment of the slope plate **22** may be started after the door **12** is slightly opened. Or deployment of the slope plate **22** may be started at the same time as the door **12** is slightly opened, and adjustment of the ground clearance may be started after the door **12** is slightly opened.

The workings and effects of this method of activating the door **12** to open and close and the slope plate **22** to deploy are the same as the workings and effects of the control device **40** described above.

What is claimed is:

1. A control device of a vehicle installed in a vehicle including: a body having a vehicle cabin in which a passenger rides and a floor panel constituting a floor of the vehicle cabin; a door opening-closing mechanism that drives a door mounted on the body to open and close; and a slope deploying mechanism that deploys a slope plate housed under the floor panel to an outside of the body,

the control device coordinating operation of the door opening-closing mechanism and the slope deploying mechanism, wherein:

the control device opens the door by the door opening-closing mechanism after deploying the slope plate toward the outside of the body by the slope deploying mechanism; and

the control device deploys the slope plate to the outside of the body by the slope deploying mechanism to eject the slope plate, pushes the door out toward the outside by the door opening-closing mechanism to slightly open the door, then immediately raises the slope plate by the slope deploying mechanism until an upper surface of a body-side end of the slope plate reaches a level of an upper surface of the floor panel, grounds a leading end of the slope plate, and then fully opens the door by the door opening-closing mechanism.

2. The control device of the vehicle according to claim **1**, wherein:

the control device is installed in the vehicle that further includes a ground clearance adjusting mechanism that adjusts a ground clearance; and

when deploying the slope plate to the outside of the body by the slope deploying mechanism, the control device reduces the ground clearance by the ground clearance adjusting mechanism.

3. The control device of the vehicle according to claim **2**, wherein, when deploying the slope plate to the outside of the body by the slope deploying mechanism, the control device reduces the ground clearance by the ground clearance adjusting mechanism before a position of a center of gravity of the slope plate is sent out to the outside of the body.

4. The control device of the vehicle according to claim **3**, wherein the control device deploys the slope plate to the outside of the body by the slope deploying mechanism and, at the same time, reduces the ground clearance by the ground clearance adjusting mechanism to eject the slope plate, pushes the door out toward the outside by the door opening-closing mechanism to slightly open the door, then immediately raises the slope plate by the slope deploying mecha-

nism until an upper surface of a body-side end of the slope plate reaches a level of an upper surface of the floor panel, grounds a leading end of the slope plate, and then fully opens the door by the door opening-closing mechanism.

5. A vehicle comprising:

a body having a vehicle cabin in which a passenger rides and a floor panel constituting a floor of the vehicle cabin;

a door opening-closing mechanism that drives a door mounted on the body to open and close;

a slope deploying mechanism that deploys a slope plate housed under the floor panel to an outside of the body; and

a control device that coordinates operation of the door opening-closing mechanism and the slope deploying mechanism, wherein:

the control device opens the door by the door opening-closing mechanism after deploying the slope plate toward the outside of the body by the slope deploying mechanism; and

the control device deploys the slope plate to the outside of the body by the slope deploying mechanism to eject the slope plate, pushes the door out toward the outside by the door opening-closing mechanism to slightly open the door, then immediately raises the slope plate by the slope deploying mechanism until an upper surface of a body-side end of the slope plate reaches a level of an upper surface of the floor panel, grounds a leading end of the slope plate, and then fully opens the door by the door opening-closing mechanism.

6. A method of activating a door to open and close and a slope plate to deploy in a vehicle including: a body having a vehicle cabin in which a passenger rides and a floor panel constituting a floor of the vehicle cabin; a door opening-closing mechanism that drives a door mounted on the body to open and close; and a slope deploying mechanism that deploys a slope plate housed under the floor panel to an outside of the body,

the method involving opening the door by the door opening-closing mechanism after deploying the slope plate toward the outside of the body by the slope deploying mechanism, and

the method involves deploying the slope plate to the outside of the body by the slope deploying mechanism to eject the slope plate, pushing the door out toward the outside by the door opening-closing mechanism to slightly open the door, then immediately raising the slope plate by the slope deploying mechanism until an upper surface of a body-side end of the slope plate reaches a level of an upper surface of the floor panel, grounding a leading end of the slope plate, and then fully opening the door by the door opening-closing mechanism.

* * * * *