US012387897B2

(12) **United States Patent**
Shimizu et al.

(10) **Patent No.: US 12,387,897 B2**
(45) **Date of Patent: Aug. 12, 2025**

(54) **CONTACT APPARATUS AND ELECTROMAGNETIC RELAY**

(71) Applicant: **Panasonic Intellectual Property Management Co., Ltd.**, Osaka (JP)

(72) Inventors: **Yosuke Shimizu**, Hokkaido (JP); **Yuki Imaizumi**, Hokkaido (JP); **Tadahiro Yoshiura**, Hokkaido (JP); **Masahiro Ito**, Mie (JP)

(73) Assignee: **PANASONIC INTELLECTUAL PROPERTY MANAGEMENT CO., LTD.**, Osaka (JP)

(*) Notice: Subject to any disclaimer, the term of this patent is extended or adjusted under 35 U.S.C. 154(b) by 170 days.

(21) Appl. No.: **18/042,469**

(22) PCT Filed: **Oct. 4, 2021**

(86) PCT No.: **PCT/JP2021/036542**
§ 371 (c)(1),
(2) Date: **Feb. 22, 2023**

(87) PCT Pub. No.: **WO2022/123873**
PCT Pub. Date: **Jun. 16, 2022**

(65) **Prior Publication Data**

US 2023/0326696 A1 Oct. 12, 2023

(30) **Foreign Application Priority Data**

Dec. 9, 2020 (JP) 2020-204458

(51) **Int. Cl.**
H01H 50/54 (2006.01)

(52) **U.S. Cl.**
CPC ***H01H 50/54*** (2013.01)

(58) **Field of Classification Search**
CPC H01H 50/54; H01H 50/38; H01H 50/546; H01H 9/443

(Continued)

(56) **References Cited**

U.S. PATENT DOCUMENTS

5,892,194 A * 4/1999 Uotome H01H 51/065 335/154
2011/0032059 A1* 2/2011 Ito H01H 50/14 218/25

(Continued)

FOREIGN PATENT DOCUMENTS

CN 104718591 A 6/2015
JP 2019-096563 A 6/2019

(Continued)

OTHER PUBLICATIONS

The EPC Office Action dated Apr. 8, 2024 for the related European Patent Application No. 21902977.4.

(Continued)

Primary Examiner — Shawki S Ismail
Assistant Examiner — Lisa N Homza
(74) *Attorney, Agent, or Firm* — Rimon P.C.

(57) **ABSTRACT**

This contact apparatus includes: a fixed contact; a movable contactor including a movable contact facing the fixed contact; a magnetic shield configured to move in conjunction with the movable contactor and including a first shield portion, a second shield portion, and a joining portion joining the first shield portion and the second shield portion together; and a magnet having a first surface facing the fixed contact, the movable contact, and the first shield portion. The fixed contact, the movable contact, and the first shield portion are arranged in the following order: the fixed contact; the movable contact; and the first shield portion. The first shield portion includes a protrusion extending along the first surface of the magnet.

12 Claims, 8 Drawing Sheets

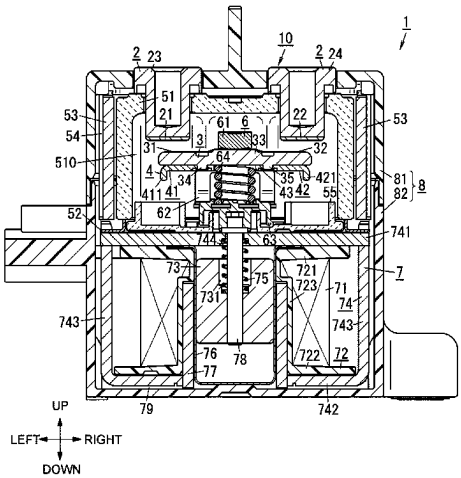

(58) **Field of Classification Search**
USPC 335/201
See application file for complete search history.

(56) **References Cited**

U.S. PATENT DOCUMENTS

2016/0155592	A1*	6/2016	Ito	H01H 50/36 335/187
2016/0260566	A1*	9/2016	Shima	H01H 50/54
2019/0035586	A1	1/2019	Ito et al.	
2019/0355536	A1*	11/2019	Ozaki	H01H 9/443

FOREIGN PATENT DOCUMENTS

JP	2020-064871	4/2020
WO	2014/087574	6/2014
WO	2022/091574 A1	5/2022

OTHER PUBLICATIONS

International Search Report of PCT application No. PCT/JP2021/036542 dated Dec. 7, 2021.

* cited by examiner

FIG. 1

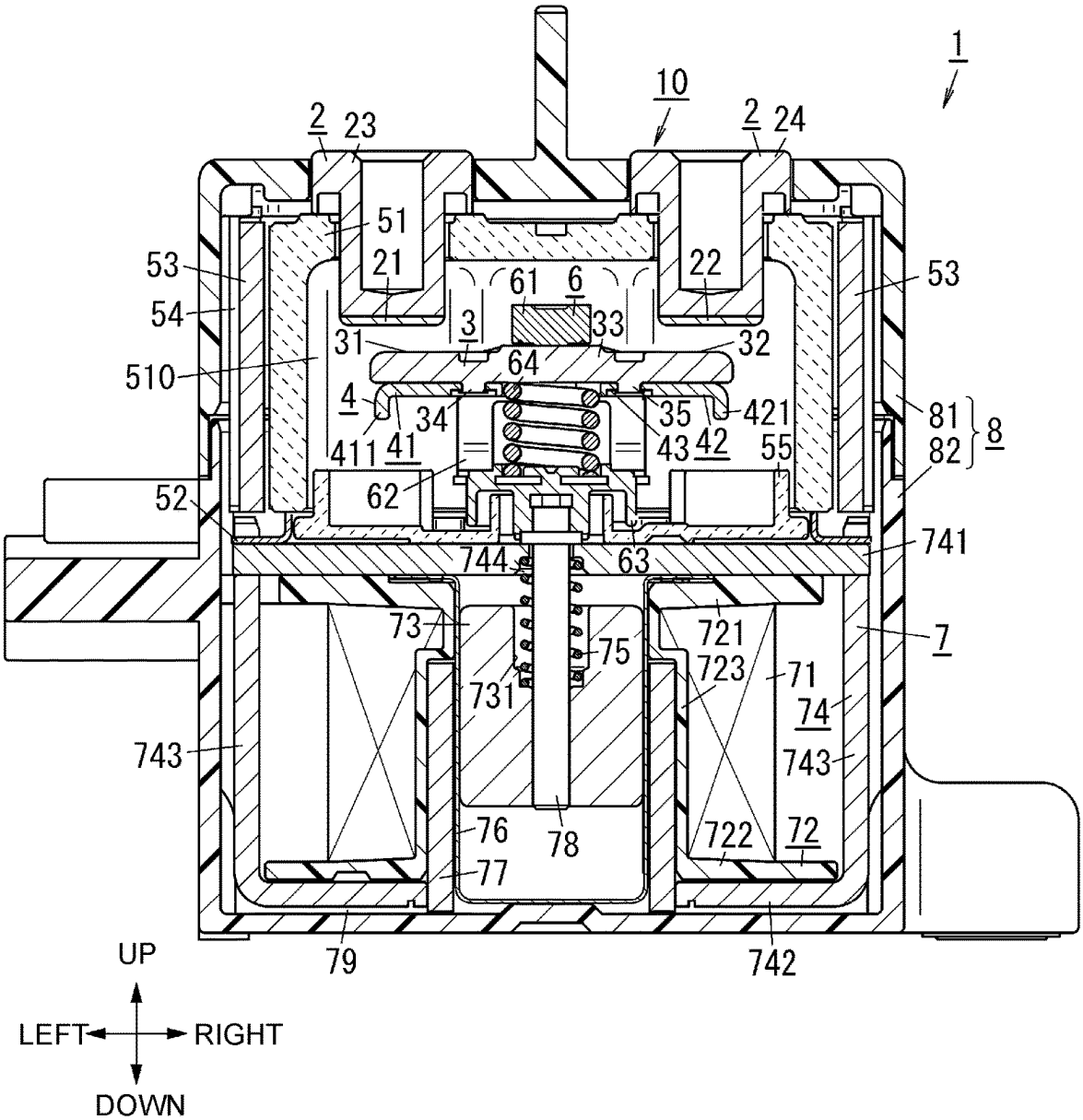
1
10
2
23
2
24
51
21
22
53
53
54
61
6
3
33
31
32
64
510
4
34
35
421
81
8
82
411
41
43
42
55
52
62
741
744
63
73
721
7
75
723
71
731
74
743
743
76
78
722
72
77
79
742
UP
LEFT
RIGHT
DOWN

FIG. 2

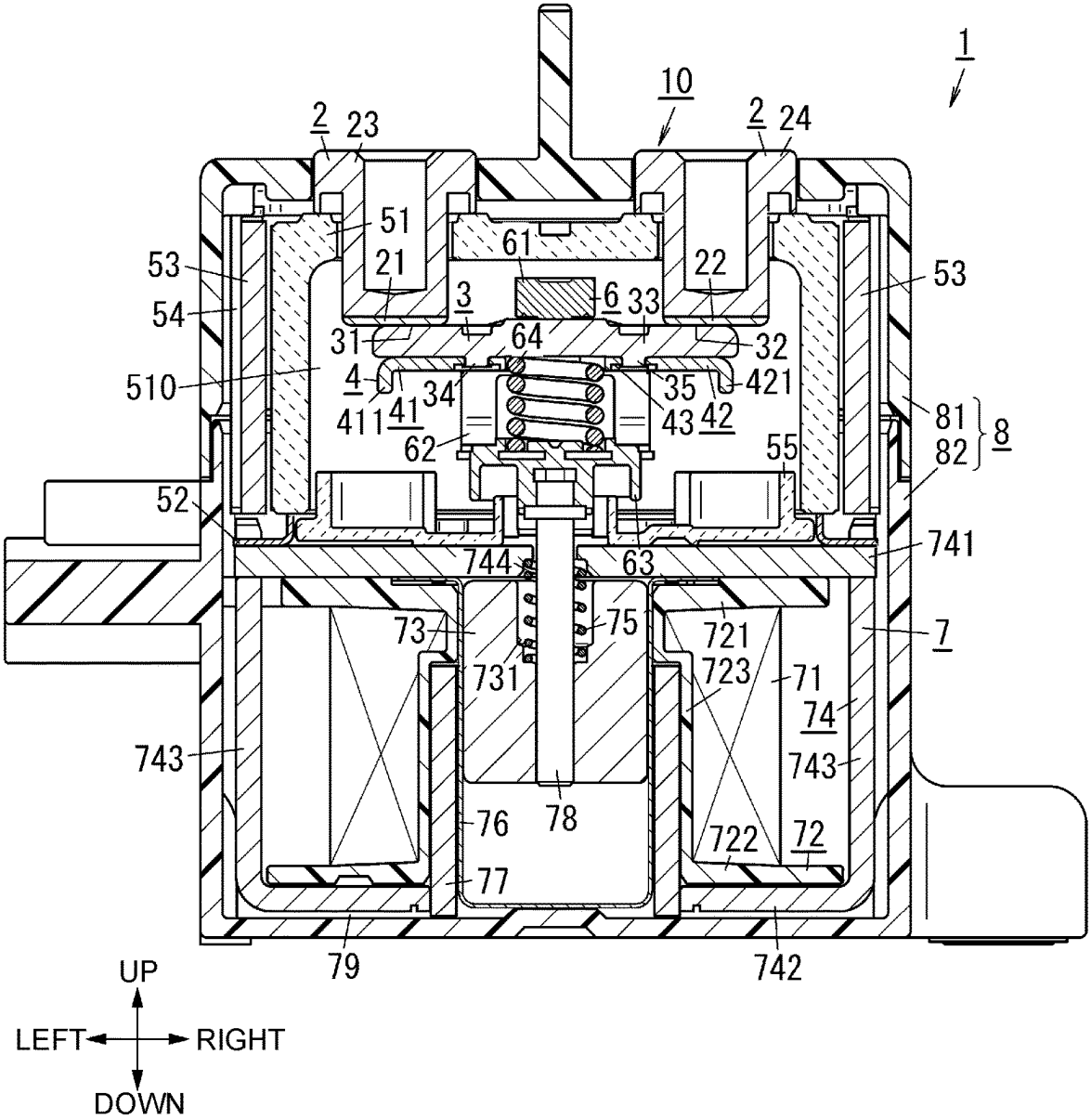
1
10
2
23
2
24
51
61
53
21
22
53
54
3
6
33
31
64
32
510
4
34
35
421
411
41
43
42
81
8
82
62
55
52
741
744
63
73
75
721
7
731
723
71
74
743
743
76
78
722
72
77
79
742
UP
LEFT
RIGHT
DOWN

FIG. 3

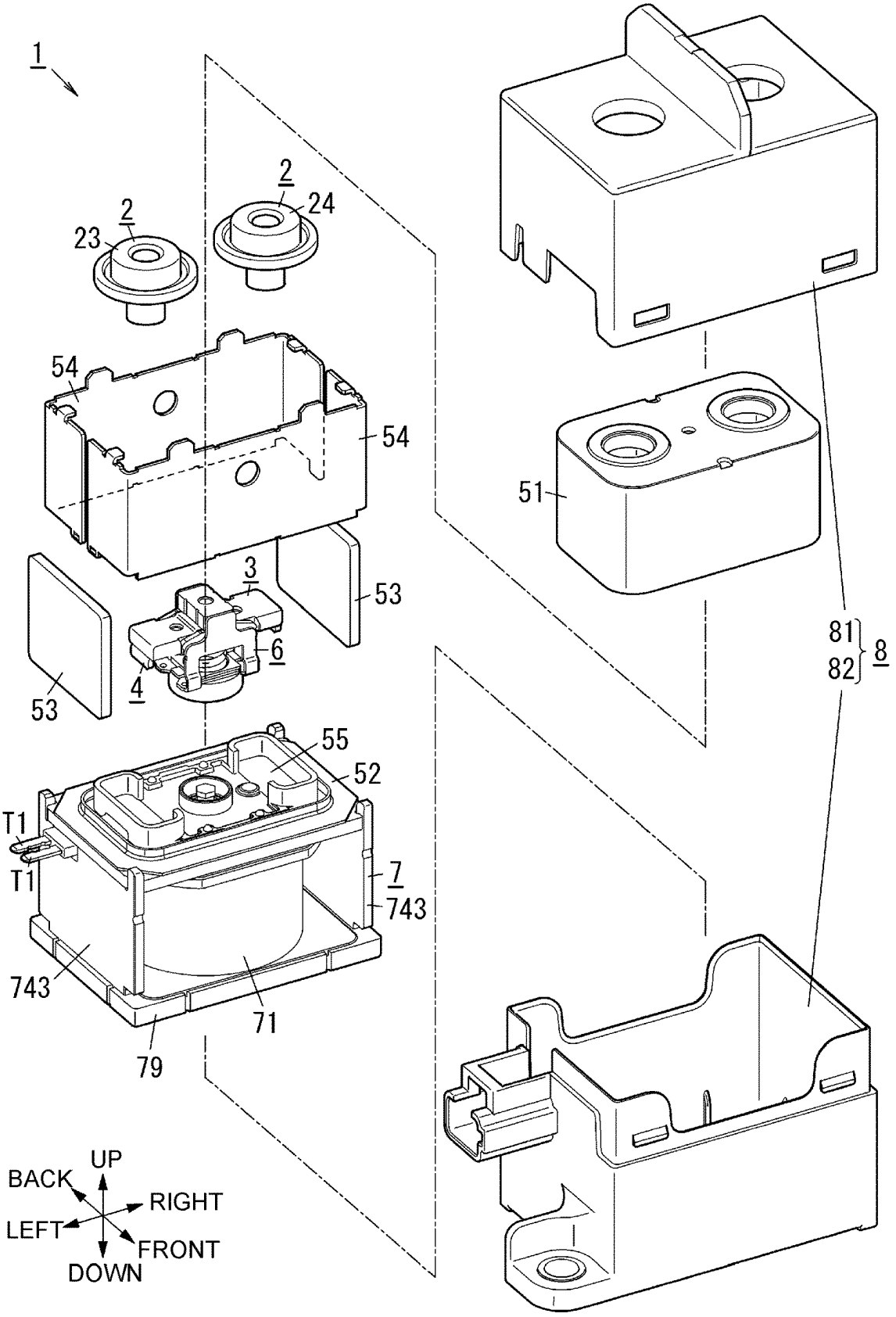
1
2
23
2
24
54
54
51
3
53
6
4
53
81
82
8
55
52
T1
T1
7
743
743
71
79
UP
BACK
RIGHT
LEFT
FRONT
DOWN

FIG. 4

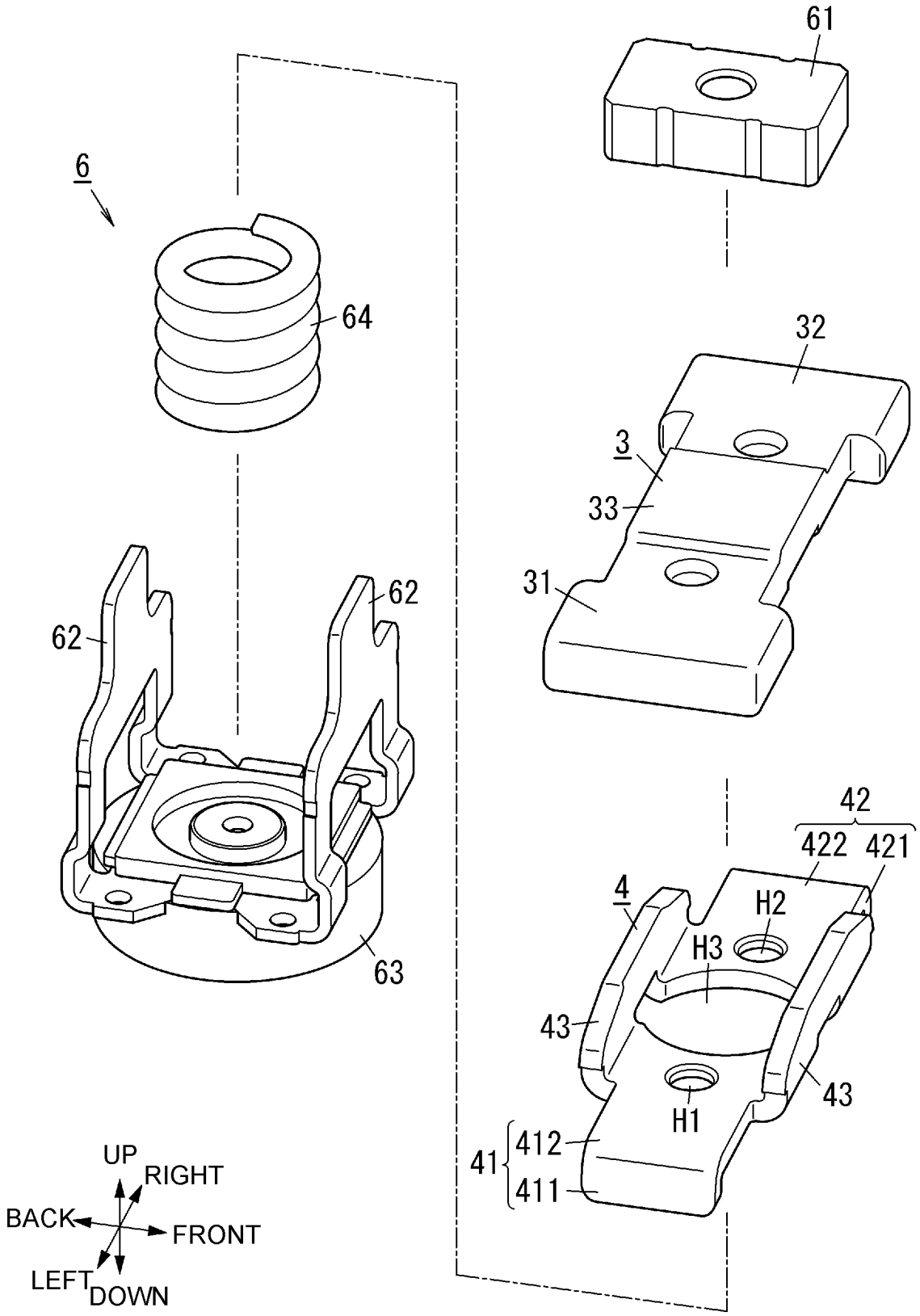
61
6
64
32
3
33
31
62
62
63
42
422
421
4
H2
H3
43
43
H1
41
412
411
UP
RIGHT
BACK
FRONT
LEFT
DOWN

FIG. 5

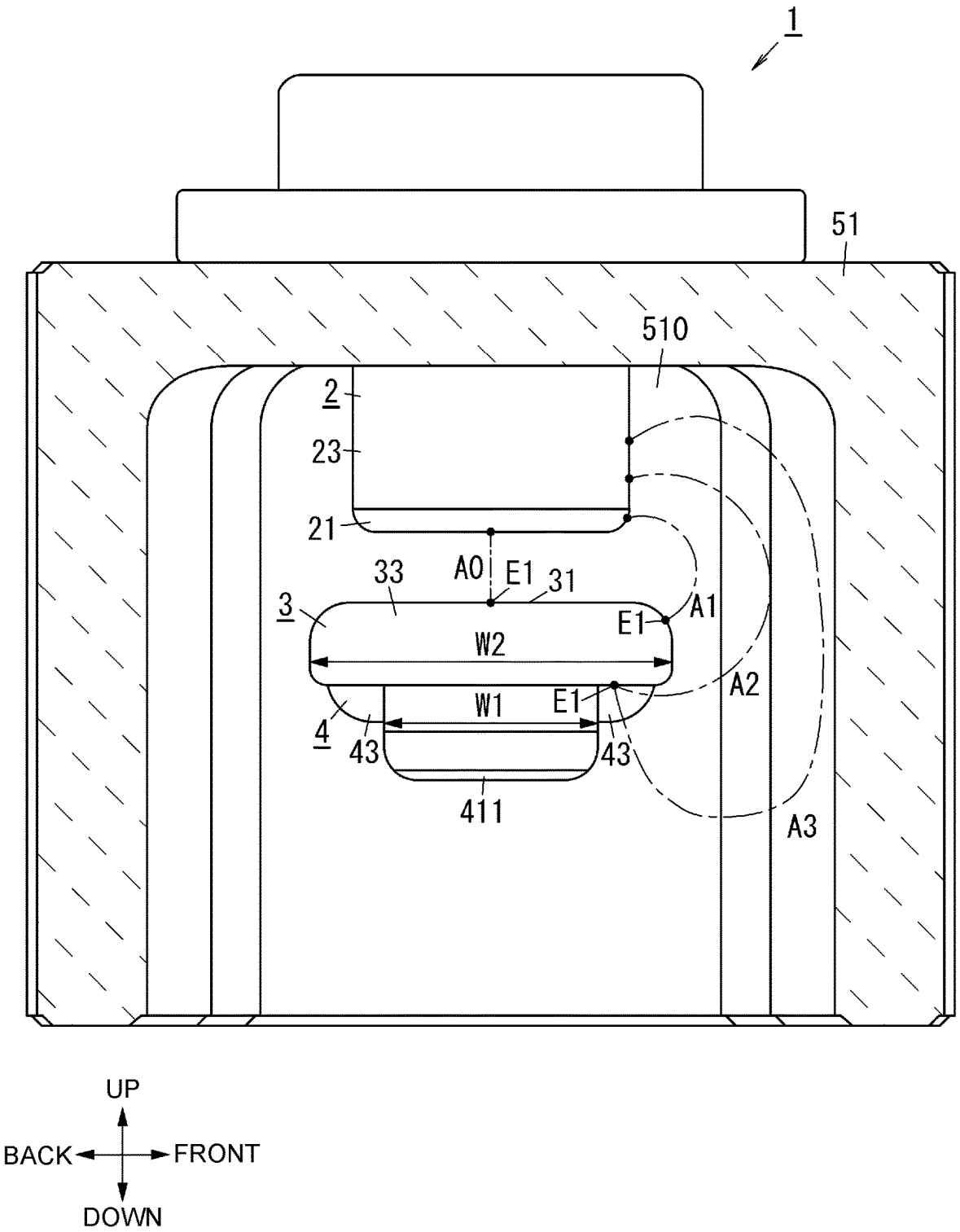
1
51
510
2
23
21
A0
E1
33
31
3
A1
E1
W2
A2
W1
E1
4
43
43
411
A3
UP
BACK
FRONT
DOWN

FIG. 6

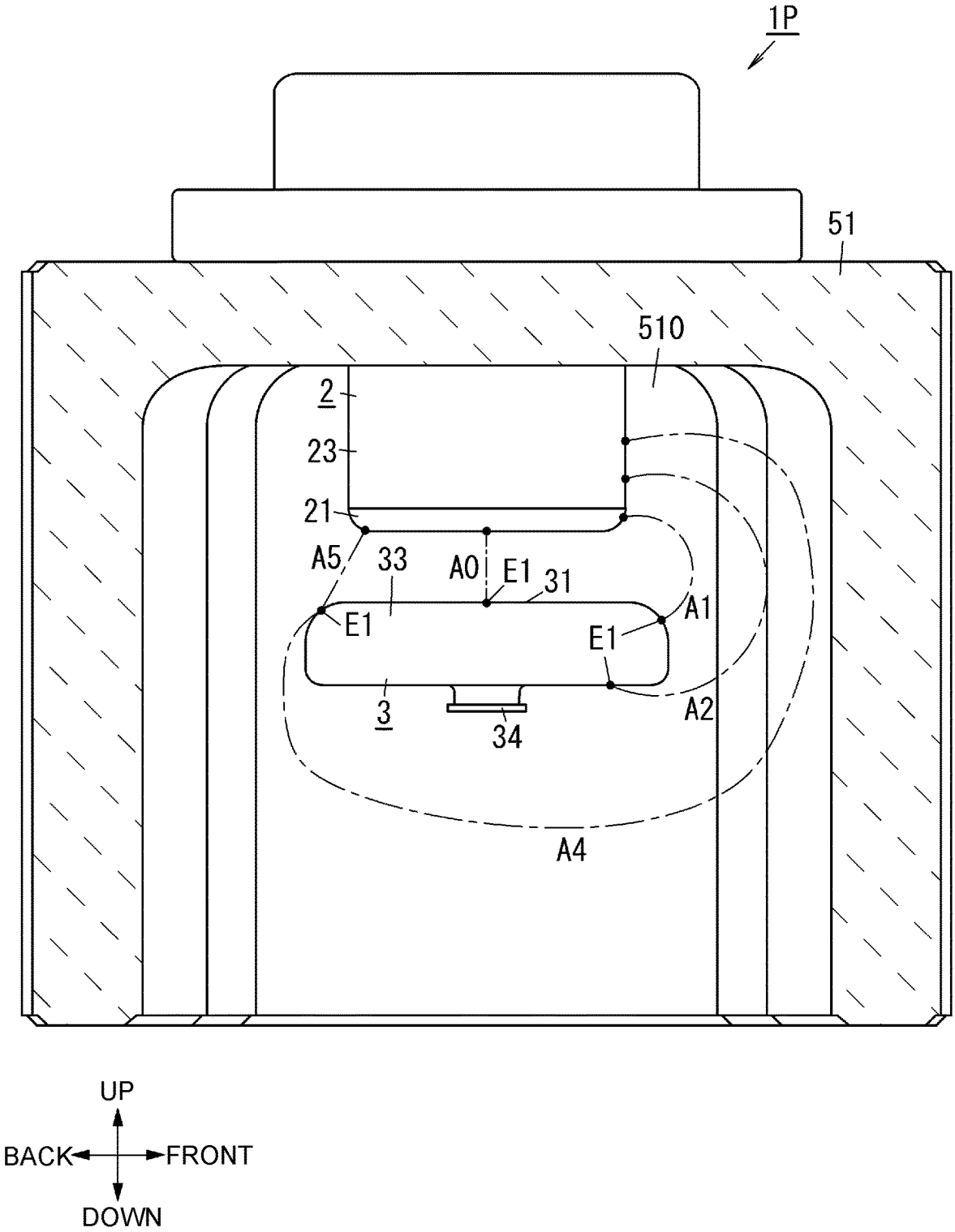
1P
51
510
2
23
21
A5
33
A0
E1
31
A1
E1
E1
3
34
A2
A4
UP
BACK
FRONT
DOWN

FIG. 7

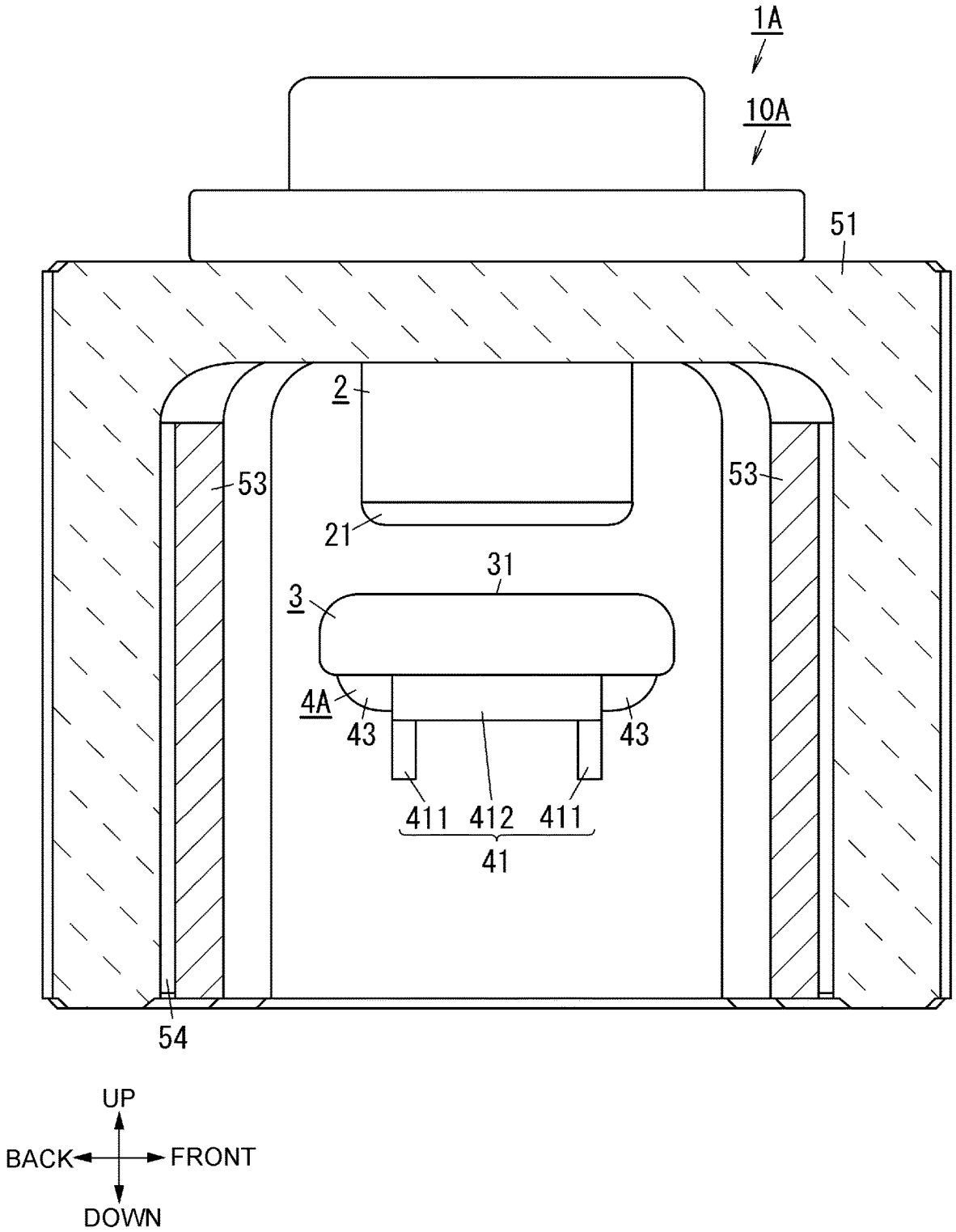
1A
10A
51
2
53
53
21
31
3
4A
43
43
411
412
411
41
54
UP
BACK
FRONT
DOWN

FIG. 8

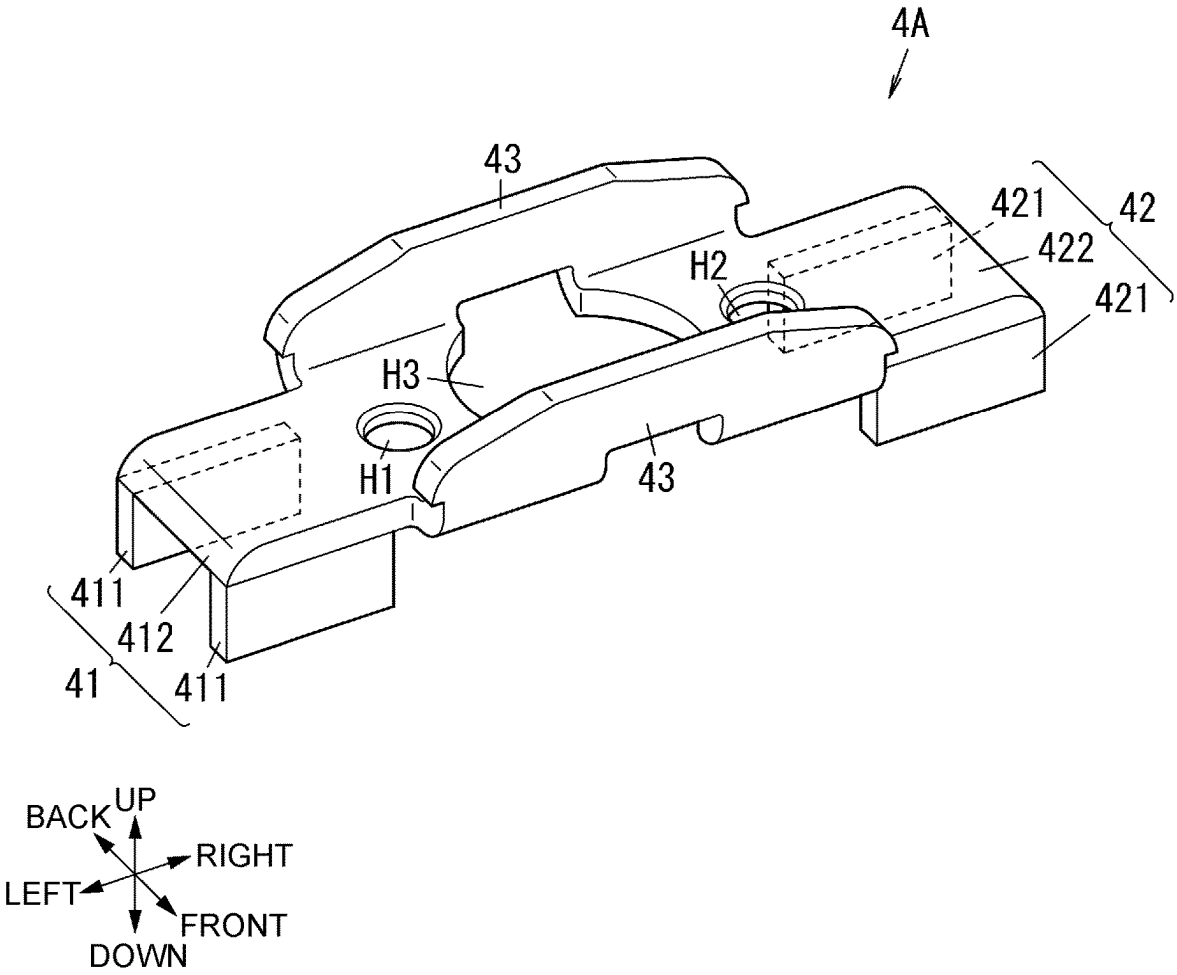
4A
43
421
42
422
H2
421
H3
H1
43
411
412
41
411
BACK
UP
RIGHT
LEFT
FRONT
DOWN

CONTACT APPARATUS AND ELECTROMAGNETIC RELAY

CROSS-REFERENCE TO RELATED APPLICATIONS

This application is a U.S. national stage application of the PCT International Application No. PCT/JP2021/036542 filed on Oct. 4, 2021, which claims the benefit of foreign priority of Japanese patent application No. 2020-204458 filed on Dec. 9, 2020, the contents all of which are incorporated herein by reference.

TECHNICAL FIELD

The present disclosure generally relates to contact apparatuses and electromagnetic relays and more particularly relates to a contact apparatus including at least one permanent magnet and an electromagnetic relay including said contact apparatus.

BACKGROUND ART

The contact device disclosed in Patent Literature (PTL) 1 includes a contact block, a driving block, and a yoke. The contact block includes a fixed contact and a movable contactor. The movable contactor includes a movable contact that comes into and out of contact with the fixed contact. The driving block includes a driving shaft that moves the movable contactor, and drives the driving shaft so that the movable contact comes into and out of contact with the fixed contact. The yoke is disposed on one side of the movable contactor in a driving direction and is fixed to the movable contactor.

CITATION LIST

Patent Literature

PTL 1: Unexamined Japanese Patent Publication No. 2020-064871

SUMMARY OF INVENTION

In a contact apparatus configured as described in PTL 1, there are cases where an electric arc is generated between the fixed contact and the movable contact when the fixed contact and the movable contact separate from each other.

A contact apparatus according to one aspect of the present disclosure includes: a first fixed contact; a movable contactor including a first movable contact facing the first fixed contact; a magnetic shield configured to move in conjunction with the movable contactor and including a first shield portion, a second shield portion, and a joining portion joining the first shield portion and the second shield portion together; and a first magnet having a first surface facing the first fixed contact, the first movable contact, and the first shield portion, wherein the first fixed contact, the first movable contact, and the first shield portion are arranged in the following order: the first fixed contact; the first movable contact; and the first shield portion, and the first shield portion includes a protrusion extending along the first surface of the first magnet.

An electromagnetic relay according to one aspect of the present disclosure includes: the contact apparatus according to the above aspect; and an electromagnet apparatus including a shaft and located below the contact apparatus, wherein the shaft moves in conjunction with the movable contactor, when the shaft moves upward, the first movable contact approaches the first fixed contact, and when the shaft moves downward, the first movable contact separates from the first fixed contact.

BRIEF DESCRIPTION OF DRAWINGS

FIG. **1** is a front cross-sectional view of an electromagnetic relay according to Embodiment 1 with a coil unenergized.

FIG. **2** is a front cross-sectional view of the electromagnetic relay with the coil energized.

FIG. **3** is an exploded perspective view of the electromagnetic relay.

FIG. **4** is an exploded perspective view of main components of the electromagnetic relay.

FIG. **5** is a side cross-sectional view of main components of the electromagnetic relay.

FIG. **6** is a side cross-sectional view of main components of an electromagnetic relay according to a comparative example.

FIG. **7** is a side cross-sectional view of main components of an electromagnetic relay according to Embodiment 2.

FIG. **8** is a perspective view of a magnetic shield of the electromagnetic relay.

DESCRIPTION OF EMBODIMENTS

The following exemplary embodiments describe contact apparatuses and electromagnetic relays according to the present disclosure with reference to the drawings. Note that each of the following exemplary embodiments is merely a part of various exemplary embodiments of the present disclosure. Various changes can be made to each of the following exemplary embodiments according to the design or the like as long as the object of the present disclosure can be achieved. Furthermore, each figure described in the following exemplary embodiments is a schematic diagram, meaning that the ratio between the sizes of structural elements in each figure and the ratio between the thicknesses of structural elements in each figure do not necessarily reflect an actual dimension ratio.

Embodiment 1

[Outline]

Electromagnetic relay **1** (refer to FIG. **1**) is provided in an electric vehicle, for example. Electromagnetic relay **1** switches between supplying and not supplying an electric current from a power supply to a motor in the electric vehicle, for example.

As illustrated in FIG. **1**, electromagnetic relay **1** includes contact apparatus **10** and electromagnet apparatus **7**. Contact apparatus **10** includes: a pair of fixed contacts that are first fixed contact **21** and second fixed contact **22**; movable contactor **3**; at least one permanent magnet **53**; and magnetic shield **4**. Movable contactor **3** includes a pair of movable contacts **31**, **32** that correspond to the pair of fixed contacts, respectively; and movable contactor body **33** that electrically connects the pair of movable contacts **31**, **32**. Movable contactor **3** can move between a closed position in which each of the pair of movable contacts **31**, **32** is in contact with a corresponding one of the pair of fixed contacts and an open position in which each of the pair of movable contacts **31**, **32** is separate from the corresponding one of the pair of fixed contacts. At least one permanent magnet **53** applies, to the

space between movable contactor **3** and the pair of fixed contacts, a magnetic field extending in the horizontal direction in which the pair of movable contacts **31**, **32** are arranged. Magnetic shield **4** includes first shield portion **41**, second shield portion **42**, and joining portion **43**. First shield portion **41** overlaps at least a portion of first fixed contact **21** in the vertical direction in which movable contactor **3** moves and is disposed on a side of movable contactor **3** that is opposite the side on which first fixed contact **21** is disposed. Second shield portion **42** overlaps at least a portion of second fixed contact **22** in the vertical direction and is disposed on a side of movable contactor **3** that is opposite the side on which second fixed contact **22** is disposed. Joining portion **43** joins first shield portion **41** and second shield portion **42** together.

With the above-described configuration, end point E**1** (refer to FIG. **5**) of an electric arc is less likely to move on a surface (the lower surface) of movable contactor **3** that is located on magnetic shield **4** side, as compared to the case where magnetic shield **4** is not provided. Therefore, it is possible to reduce the likelihood that after the electric arc generated in the space between the fixed contact and movable contact **31** (**32**) is drawn to the outside of said space, end point E**1** of the electric arc will move so as to make approximately one revolution around movable contactor **3**. When end point E**1** of the electric arc makes approximately one revolution around movable contactor **3**, the distance between end point E**1** and the fixed contact is shortened, and thus the electric arc may be transferred to the space between the fixed contact and movable contact **31** (**32**) and transition into a shorter electric arc; however, this is less likely to happen with the above-described configuration. In this manner, it is possible to reduce the likelihood that an electric arc will be repeatedly generated in the space between the fixed contact and movable contact **31** (**32**); therefore, time required to extinguish the electric arc can be reduced.

Hereinafter, a direction orthogonal to both the horizontal direction and the vertical direction is defined as a depth direction. Note that the "horizontal direction" in the present disclosure merely means a direction in which the pair of movable contacts **31**, **32** are arranged. The "vertical direction" in the present disclosure merely means a direction in which movable contactor **3** moves. The "depth direction" in the present disclosure merely means a direction orthogonal to the direction in which the pair of movable contacts **31**, **32** are arranged and the direction in which movable contactor **3** moves. The terms "horizontal direction", "vertical direction", and "depth direction" used in the present disclosure are not intended to limit the directions of contact apparatus **10** and electromagnetic relay **1** when in use.

The side on which the pair of movable contacts **31**, **32** are located as viewed from first fixed contact **21** and second fixed contact **22** is defined as "down", and the side on which first fixed contact **21** and second fixed contact **22** are located as viewed from the pair of movable contacts **31**, **32** is defined as "up". The side on which second fixed contact **22** is located as viewed from first fixed contact **21** is defined as "right", and the side on which first fixed contact **21** is located as viewed from second fixed contact **22** is defined as "left".

Each of the arrows representing left, right, up, down, front, and back in FIG. **1**, etc., is indicated for explanation only and is not substantive.

In the present disclosure, although description is given using terms indicating directions such as "up", "down", "left", "right", "front", and "back", these merely indicate relative positioning and do not limit the present disclosure.

[Details]

(1) Structural Elements of Electromagnetic Relay

As illustrated in FIG. **1**, electromagnetic relay **1** according to the present exemplary embodiment includes contact apparatus **10** and electromagnet apparatus **7**. Electromagnet apparatus **7** performs at least one of the operation of switching the position of movable contactor **3** to the closed position and the operation of switching the position of movable contactor **3** to the open position. Electromagnet apparatus **7** according to the present exemplary embodiment includes coil **71** and when coil **71** is energized, switches the position of movable contactor **3** from the open position to the closed position by the electromagnetic action of coil **71**. Furthermore, electromagnet apparatus **7** includes return spring **75** and when coil **71** enters into a non-energized state, switches the position of movable contactor **3** from the closed position to the open position by the elastic force of return spring **75**.

Electromagnetic relay **1** further includes housing **8**. Housing **8** accommodates contact apparatus **10** and electromagnet apparatus **7**.

Housing **8** includes first body **81** and second body **82**. First body **81** is formed in the shape of a box having a lower surface with an opening portion. Second body **82** is formed in the shape of a box having an upper surface with an opening portion. First body **81** and second body **82** are joined together at the edges of the respective opening portions thereof.

(2) Structural Elements of Contact Apparatus

As illustrated in FIG. **1**, contact apparatus **10** includes a pair of fixed terminals **2**, movable contactor **3**, magnetic shield **4**, case **51**, joining body **52**, two permanent magnets **53**, two bridge parts **54** (refer to FIG. **3**), blocking member **55**, and holder **6**.

(3) Fixed Terminal

The material of each of the pair of fixed terminals **2** is an electrically conductive material such as copper. Each fixed terminal **2** is disposed passing through first body **81** and case **51**. Each fixed terminal **2** has an upper end protruding from the upper surface of case **51** and the upper surface of first body **81** when joined to case **51** by brazing.

One of the pair of fixed terminals **2** includes terminal body **23** and first fixed contact **21**. The other of the pair of fixed terminals **2** includes terminal body **24** and second fixed contact **22**. Each of terminal body **23**, **24** is in the shape of a circular cylinder. First fixed contact **21** is attached to the lower end of terminal body **23**. Note that first fixed contact **21** may be integrally formed with terminal body **23**. Second fixed contact **22** is attached to the lower end of terminal body **24**. Note that second fixed contact **22** may be integrally formed with terminal body **24**.

(4) Movable Contactor

The material of movable contactor **3** is an electrically conductive material such as copper. Furthermore, the material of movable contactor **3** is a non-magnetic material. As illustrated in FIG. **4**, movable contactor **3** includes a pair of movable contacts **31**, **32** and movable contactor body **33**. Movable contactor body **33** is formed flat. The thickness direction of movable contactor body **33** is the vertical direction. The longitudinal direction of movable contactor body **33** is the horizontal direction.

Movable contact **31** is provided in a left end portion of the upper surface of movable contactor body **33**. Movable contact **32** is provided in a right end portion of the upper surface of movable contactor body **33**. Movable contact **31** faces first fixed contact **21**. Movable contact **32** faces second fixed contact **22**. In other words, movable contact **31** is located below first fixed contact **21**, and movable contact **32**

is located below second fixed contact **22**. Each of movable contacts **31**, **32** is a portion of the upper surface of movable contactor body **33**.

In the present exemplary embodiment, movable contacts **31**, **32** are integrated with movable contactor body **33**, but movable contacts **31**, **32** may be separate from movable contactor body **33**.

When movable contactor **3** is in the open position (refer to FIG. **1**), the pair of fixed terminals **2** do not conduct electricity therebetween. When movable contactor **3** is in the closed position (refer to FIG. **2**), the pair of fixed terminals **2** conduct electricity therebetween via movable contactor **3**.

As illustrated in FIG. **1**, movable contactor **3** further includes first projection **34** and second projection **35** which protrude from the lower surface of movable contactor body **33**.

(5) Magnetic Shield

The material of magnetic shield **4** is a magnetic material. One example of the magnetic material is electromagnetic soft iron or steel plate cold commercial (SPCC). The permeability of magnetic shield **4** is greater than the permeability of movable contactor **3**.

As illustrated in FIG. **4**, magnetic shield **4** includes first shield portion **41**, second shield portion **42**, and two joining portions **43**.

First shield portion **41** includes protrusion **411** and main piece **412**. Second shield portion **42** includes protrusion **421** and main piece **422**. Each of main pieces **412**, **422** is formed in the shape of a rectangular board. The thickness direction of main pieces **412**, **422** is the vertical direction. The longitudinal direction of main pieces **412**, **422** is the horizontal direction. Protrusion **411** is provided in a left end portion of main piece **412**. Protrusion **411** protrudes downward from main piece **412**. Protrusion **421** is provided in a right end portion of main piece **422**. Protrusion **421** protrudes downward from main piece **422**.

First shield portion **41** is disposed below movable contact **31**. Second shield portion **42** is disposed below movable contact **32**. First shield portion **41** has fitting hole H**1**. Second shield portion **42** has fitting hole H**2**. First projection **34** (refer to FIG. **1**) of movable contactor **3** is inserted into fitting hole H**1**, and second projection **35** (refer to FIG. **1**) of movable contactor **3** is inserted into fitting hole H**2**; thus, magnetic shield **4** is connected to movable contactor **3**. In other words, magnetic shield **4** has a connecting structure (fitting holes H**1**, H**2**) for connection to movable contactor **3**. Furthermore, movable contactor **3** has a connecting structure (first projection **34** and second projection **35**) for connection to magnetic shield **4**.

The aforementioned connecting structure of each of magnetic shield **4** and movable contactor **3** is more specifically a structure for connecting magnetic shield **4** and movable contactor **3** by swaging. Specifically, at least one of movable contactor **3** and magnetic shield **4** (in this example, magnetic shield **4**) includes a depression (fitting holes H**1**, H**2**) into which at least a portion (first projection **34** and second projection **35**) of the other (movable contactor **3**) fits. The bottom of this depression is open.

Magnetic shield **4** is in contact with movable contactor **3**. More specifically, the upper surface of first shield portion **41** and the upper surface of second shield portion **42** are in contact with the lower surface of movable contactor body **33**.

Two joining portions **43** face each other in the depth direction. Two joining portions **43** are elongated in the horizontal direction. A left end portion of each of two joining portions **43** is connected to first shield portion **41**, and a right end portion of each of two joining portions **43** is connected to second shield portion **42**. One of two joining portions **43** is provided projecting upward from a front end portion of first shield portion **41** and a front end portion of second shield portion **42**. The other of two joining portions **43** is provided projecting upward from a back end portion of first shield portion **41** and a back end portion of second shield portion **42**.

Magnetic shield **4** has through-hole H**3**. Through-hole H**3** is provided between first shield portion **41** and second shield portion **42**.

FIG. **5** is a side cross-sectional view of main components including fixed terminal **2**, movable contactor **3**, and magnetic shield **4** of electromagnetic relay **1**. In the depth direction, width W**1** (refer to FIG. **5**) of main piece **412** of first shield portion **41** and the width (refer to FIG. **4**) of main piece **422** of second shield portion **42** are equal. As illustrated in FIG. **5**, in the depth direction, width W**1** of main piece **412** of first shield portion **41** and the width of main piece **422** of second shield portion **42** are less than or equal to width W**2** of an end portion of movable contactor **3**. In the present exemplary embodiment, width W**1** is less than width W**2**. The front end of main piece **412** of first shield portion **41** and the front end of main piece **422** of second shield portion **42** are located back of the front end of the end portion of movable contactor **3**, and the back end of main piece **412** of first shield portion **41** and the back end of main piece **422** of second shield portion **42** are located forward of the back end of the end portion of movable contactor **3**.

6) Holder

(6) Holder

As illustrated in FIG. **1** and FIG. **4**, holder **6** includes upper wall part **61**, two side plates **62**, spring bearing part **63**, and contact pressure spring **64**. Holder **6** holds movable contactor **3** and magnetic shield **4**.

The material of upper wall part **61** is a magnetic material. One example of the magnetic material is electromagnetic soft iron or steel plate cold commercial (SPCC). Upper wall part **61** is in the shape of a rectangular cuboid.

The material of two side plates **62** is, for example, a metal. The material of spring bearing part **63** is, for example, a synthetic resin. Two side plates **62** and spring bearing part **63** are integrally formed. Two side plates **62** protrude upward from spring bearing part **63**. Two side plates **62** face each other in the depth direction. Upper wall part **61** connect upper end portions of two side plates **62**. Movable contactor **3** extends between upper wall part **61** and spring bearing part **63**.

Contact pressure spring **64** is, for example, a helical compression spring. Contact pressure spring **64** is inserted into through-hole H**3** of magnetic shield **4**. Compression pressure spring **64** is disposed between spring bearing part **63** and movable contactor **3** so as to be extended and retracted in the vertical direction. Movable contactor **3** is sandwiched between contact pressure spring **64** and upper wall part **61**. Contact pressure spring **64** applies an upward elastic force to movable contactor **3**.

When an electric current flows through movable contactor **3** and the pair of fixed contacts (first fixed contact **21** and second fixed contact **22**) at the time of contact thereof, an electromagnetic repulsive force acts between movable contactor **3** and the pair of fixed contacts due to this electric current.

Upper wall part **61** faces two joining portions **43** of magnetic shield **4**. Thus, with upper wall part **61** and magnetic shield **4**, a magnetic circuit that surrounds movable contactor **3** is formed. When an electric current flows

through movable contacts **31**, **32** and the pair of fixed contacts at the time of contact thereof, a magnetic attractive force is generated between upper wall part **61** and magnetic shield **4**. This restricts the operation of movable contactor **3** separating from the pair of fixed contacts. Thus, it is possible to reduce the likelihood that an electric arc will be generated between movable contactor **3** and the pair of fixed contacts.

(7) Case

Next, case **51** will be described with reference to FIG. **1**. The material of case **51** is a heat-resistant material such as a ceramic. Case **51** is in the shape of a box with an open bottom. The internal space of case **51** is housing chamber **510** which accommodates first fixed contact **21**, second fixed contact **22**, and movable contactor **3**. In other words, contact apparatus **10** includes housing chamber **510**. Housing chamber **510** contains an arc-extinguishing gas such as hydrogen. Note that housing chamber **510** does not need to be sealed and may be connected to the external environment.

(8) Joining Body

Joining body **52** is in the shape of a rectangular frame. Joining body **52** is joined to case **51** by brazing. Furthermore, joining body **52** is welded to yoke **74** included in electromagnet apparatus **7**. Thus, joining body **52** joins case **51** and yoke **74** together.

(9) Two Permanent Magnets

Two permanent magnets **53** are disposed and fixed between the outer surface of case **51** and the inner surface of housing **8**. Two permanent magnets **53** are arranged in the horizontal direction. One of two permanent magnets **53** is positioned to the left of movable contactor **3**, and the other is positioned to the right of movable contactor **3**. Two permanent magnets **53** overlap at least a portion of magnetic shield **4** in the horizontal direction.

Different poles of two permanent magnets **53** face each other. For example, the north pole of permanent magnet **53** on the left side is directed to the right, and the south pole of permanent magnet **53** on the right side is directed to the left. Two permanent magnets **53** apply, to the space between movable contactor **3** and first fixed contact **21** and the space between movable contactor **3** and second fixed contact **22**, a magnetic field extending in the horizontal direction. Furthermore, the magnetic field also extends around movable contactor **3** (for example, downward of movable contactor **3**).

The upper ends of two permanent magnets **53** are aligned with the upper end of case **51** in the horizontal direction. The lower ends of two permanent magnets **53** are aligned with the lower end of case **51** in the horizontal direction.

(10) Two Bridge Parts

Next, two bridge parts **54** will be described with reference to FIG. **1** and FIG. **3**. The material of two bridge parts **54** is a magnetic material. Each bridge part **54** is in the "U" shape as viewed in the vertical direction. One of two bridge parts **54** is positioned in front of movable contactor **3**, and the other is positioned behind movable contactor **3**. Two bridge parts **54** are disposed so as to bridge the space between two permanent magnets **53**. Furthermore, two bridge parts **54** hold two permanent magnets **53**. Two bridge parts **54** form a ring-shaped magnetic circuit with two permanent magnets **53**.

The upper ends of two bridge parts **54** are aligned with the upper end of case **51** in the horizontal direction. The lower ends of two bridge parts **54** are aligned with the lower end of case **51** in the horizontal direction.

(11) Blocking Member

Blocking member **55** has electrical insulating properties. The material of blocking member **55** is, for example, a ceramic or a synthetic resin. Blocking member **55** is housed in housing chamber **510**.

In contact apparatus **10**, there are cases where an electric arc is generated between movable contacts **31**, **32** and the pair of fixed contacts when movable contactor **3** moves from the closed position to the open position. Providing blocking member **55** results in restricting the range where the electric arc extends.

(12) Electromagnet Apparatus

As illustrated in FIG. **1**, electromagnet apparatus **7** includes coil **71**, coil bobbin **72**, movable core **73**, yoke **74**, return spring **75**, cylindrical member **76**, bush **77**, shaft **78**, and bottom wall part **79**. Furthermore, electromagnet apparatus **7** includes a pair of coil terminals T**1** (refer to FIG. **3**) to which both ends of coil **71** are connected. The material of each coil terminal T**1** is an electrically conductive material such as copper.

The material of coil bobbin **72** is, for example, a synthetic resin. Coil bobbin **72** includes two flange portions **721**, **722** and cylindrical portion **723**. Coil **71** is wound around cylindrical portion **723**. Flange portion **721** extends from the upper end of cylindrical portion **723** outward in the radial direction of cylindrical portion **723**. Flange portion **722** extends from the lower end of cylindrical portion **723** outward in the radial direction of cylindrical portion **723**.

Cylindrical member **76** is in the shape of a bottomed cylinder with an open top end. Cylindrical member **76** is housed in cylindrical portion **723** of coil bobbin **72**.

The material of movable core **73** is a magnetic material. Movable core **73** is in the shape of a cylinder. Movable core **73** is housed in cylindrical member **76**. Shaft **78** extends through the inside of movable core **73**, and movable core **73** and shaft **78** are connected. Movable core **73** includes recess **731** depressed downward from the upper surface of movable core **73**.

Yoke **74** forms at least a portion of the magnetic circuit that allows passage of the magnetic flux generated at coil **71** when coil **71** is energized. Yoke **74** includes first yoke **741**, second yoke **742**, and two third yokes **743**. Each of first yoke **741**, second yoke **742**, and two third yokes **743** is formed in the shape of a board.

First yoke **741** is disposed between movable contactor **3** and coil **71**. First yoke **741** is in contact with the upper surface of coil bobbin **72**. First yoke **741** is in the shape of a rectangular board. First yoke **741** has insertion hole **744** in a central portion. Shaft **78** extends through insertion hole **744**.

Second yoke **742** is in contact with the lower surface of coil bobbin **72**. One of two third yokes **743** extends from the left end of second yoke **742** to first yoke **741**. The other of two third yokes **743** extends from the right end of second yoke **742** to first yoke **741**.

Return spring **75** is, for example, a helical compression spring. A first end of return spring **75** in the stretching direction (the vertical direction) is in contact with first yoke **741**, and a second end of return spring **75** in the stretching direction (the vertical direction) is in contact with the bottom surface of recess **731** of movable core **73**. Return spring **75** applies an elastic force to movable core **73** to move movable core **73** downward.

Shaft **78** is in the shape of a round rod. The axial direction of shaft **78** is the vertical direction. The upper end of shaft **78** is connected to holder **6**. The lower end of shaft **78** is connected to movable core **73**. When movable core **73**

moves in the vertical direction, shaft **78**, holder **6**, and movable contactor **3** held by holder **6** move together in the vertical direction.

Bottom wall part **79** is in the shape of a rectangular board. Bottom wall part **79** is disposed below second yoke **742**. Bottom wall part **79** holds second yoke **742**.

Bush **77** is formed of a magnetic material. Bush **77** is in the shape of a cylinder. Bush **77** is disposed between the inner peripheral surface of coil bobbin **72** and the other peripheral surface of cylindrical member **76**. Together with movable core **73** and yoke **74**, bush **77** forms a magnetic circuit that allows passage of the magnetic flux generated when coil **71** is energized.

When coil **71** is energized, the magnetic flux generated at coil **71** passes through the aforementioned magnetic circuit, and thus movable core **73** moves so that the magnetic resistance of the aforementioned magnetic circuit is reduced. Specifically, during energization of coil **71**, movable core **73** moves upward so as to fill the gap between first yoke **741** and movable core **73**. More specifically, an electromagnetic force that is exerted to move movable core **73** upward exceeds the force (elastic force) of return spring **75** that pushes movable core **73** downward; thus, movable core **73** moves upward. Accordingly, shaft **78**, holder **6**, and movable contactor **3** move upward. Thus, movable contactor **3** moves to the closed position (refer to FIG. **2**). The elastic force of contact pressure spring **64** ensures the contact pressure between movable contactor **3** and each of first fixed contact **21** and second fixed contact **22**.

When coil **71** changes from the energized state into the de-energized state, there is no longer the electromagnetic force that moves movable core **73** upward, and thus movable core **73** moves downward with the elastic force of return spring **75**. Accordingly, shaft **78**, holder **6**, and movable contactor **3** move downward. Thus, movable contactor **3** moves to the open position (refer to FIG. **1**).

(13) Behavior of Electric Arc

There are cases where an electric arc is generated between the pair of movable contacts **31**, **32** and the pair of fixed contacts (first fixed contact **21** and second fixed contact **22**) when movable contactor **3** moves from the closed position to the open state. Hereinafter, one example of the behavior of the electric arc generated between movable contact **31** and first fixed contact **21** will be described. The behavior of the electric arc generated between movable contact **32** and second fixed contact **22** may be substantially the same as the behavior described below.

FIG. **5** illustrates main components of electromagnetic relay **1** according to the present exemplary embodiment. FIG. **6** illustrates main components of electromagnetic relay **1**P according to a comparative example. In FIG. **5** and FIG. **6**, illustrations of some of the elements of electromagnetic relays **1**, **1**P (for example, holder **6** and housing **8**) are omitted.

Electromagnetic relay **1**P according to the comparative example is different from electromagnetic relay **1** according to the present exemplary embodiment in that magnetic shield **4** is not provided, but the other configuration of electromagnetic relay **1**P is the same as that of electromagnetic relay **1**. In FIG. **5** and FIG. **6**, each of dashed-dotted lines A**0** to A**5** virtually represents the electric arc generated between movable contact **31** and first fixed contact **21**. The electric arc is drawn in the internal space (housing chamber **510**) of case **51**.

Two permanent magnets **53** (refer to FIG. **1**) apply, to the space between movable contact **31** and first fixed contact **21** and an area surrounding said space, a magnetic field extending in the horizontal direction. As indicated by dashed-dotted line A**0** (refer to FIG. **5** and FIG. **6**), when an electric arc is generated between movable contact **31** and first fixed contact **21**, the electric arc is drawn with the Lorentz force while two end points of the electric arc moves. For example, as indicated by dashed-dotted line A**1** (refer to FIG. **5** and FIG. **6**), end point E**1** of the electric arc that is located on movable contactor **3** side, out of the two end points of the electric arc, moves toward the front end of movable contactor body **33**. Subsequently, for example, as indicated by dashed-dotted line A**2** (refer to FIG. **5** and FIG. **6**), end point E**1** of the electric arc that is located on movable contactor **3** side, out of the two end points of the electric arc, moves around to an area located on the lower surface of movable contactor body **33**.

Here, in the case where magnetic shield **4** is not provided, end point E**1** of the electric arc may further move on the surface of movable contactor **3**. For example, as indicated by dashed-dotted line A**4** (refer to FIG. **6**), end point E**1** of the electric arc may move so as to make approximately one revolution around movable contactor **3** and reach the upper surface of movable contactor **3**. In this manner, when end point E**1** of the electric arc approaches first fixed contact **21**, the electric arc may transition into a shorter electric arc connecting first fixed contact **21** and movable contactor **3**. For example, there are cases where the electric arc transitions into an electric arc linearly connecting first fixed contact **21** and movable contactor **3**, as indicated by dashed-dotted line A**5** (refer to FIG. **6**). When a relatively short electric arc is generated in this manner, the voltage of the electric arc may be reduced or time required to extinguish the electric arc may be increased, for example, meaning that the arc-extinguishing performance of electromagnetic relay **1**P may be degraded.

In contrast, when there is magnetic shield **4** as in the present exemplary embodiment, it is possible to reduce the likelihood that on the surface of movable contactor **3**, end point E**1** of the electric arc will move beyond magnetic shield **4**, as indicated by dashed-dotted line A**3** (refer to FIG. **5**). Specifically, in a region where magnetic shield **4** is provided out of a region located below movable contactor **3**, the magnetic field of two permanent magnets **53** (refer to FIG. **1**) passes through the magnetic circuit formed by magnetic shield **4**. Therefore, in the region where magnetic shield **4** is provided, it is possible to reduce the likelihood that the Lorentz force will act on the electric arc. Thus, it is possible to reduce the likelihood that end point E**1** of the electric arc will move on the lower surface of movable contactor **3**.

Thus, as indicated by dashed-dotted line A**3** (refer to FIG. **5**), the electric arc is drawn while barely moving end point E**1** after reaching the lower surface of movable contactor **3**. This means that it is possible to draw and extinguish the electric arc while reducing the likelihood that the electric arc will be transferred.

In magnetic shield **4**, a magnetic circuit extending from first shield portion **41** to second shield portion **42** via joining portion **43** is formed. Furthermore, first shield portion **41** includes protrusion **411**, and second shield portion **42** includes protrusion **421**. Therefore, as compared to the case where protrusions **411**, **421** are not provided, the surface area of magnetic shield **4** is large, meaning that the magnetic field applied by two permanent magnets **53** is likely to pass through the magnetic circuit formed by magnetic shield **4**. Thus, the magnetic field applied by two permanent magnets **53** makes it possible to reduce the likelihood that end point E**1** of the electric arc will move.

The direction of the magnetic field applied by at least one permanent magnet (in the present exemplary embodiment, two permanent magnets) **53** (hereinafter referred to as "the direction of application") between movable contactor **3** and the pair of fixed contacts (first fixed contact **21** and second fixed contact **22**) is the horizontal direction. The area of protrusion **411** in the cross-section orthogonal to the direction of application is greater than the area of protrusion **411** in the cross-section extending along both the direction of application and the vertical direction (the cross-section orthogonal to the depth direction). The area of protrusion **421** in the cross-section orthogonal to the direction of application is greater than the area of protrusion **421** in the cross-section extending along both the direction of application and the vertical direction. Since the area of each of protrusions **411**, **421** in the cross-section orthogonal to the direction of application is relatively large as just mentioned, the magnetic field applied by two permanent magnets **53** is likely to pass through the magnetic circuit formed by magnetic shield **4**.

Variations of Embodiment 1

Hereinafter, variations of Embodiment 1 will be listed. The following variations may be implemented in appropriate combinations.

Magnetic shield **4** may include only one of protrusion **411** and protrusion **421**. In other words, at least one of first shield portion **41** and second shield portion **42** may include protrusion **411** (or **421**) protruding away from the side on which movable contactor **3** is disposed. Furthermore, magnetic shield **4** does not need to include any of protrusion **411** and protrusion **421**.

When magnetic shield **4** includes only one of protrusion **411** and protrusion **421** and when magnetic shield **4** does not include any of protrusion **411** and protrusion **421**, it is preferable that magnetic shield **4** be thick enough in the vertical direction. This is advantageous in that the magnetic field produced by two permanent magnets **53** is likely to pass through magnetic shield **4**. The thickness of magnetic shield **4** in the vertical direction is preferably at least half of the thickness of movable contactor **3** in the vertical direction, for example. The thickness of magnetic shield **4** in the vertical direction is more preferably at least one time as great as the thickness of movable contactor **3** in the vertical direction.

Instead of being arranged in the horizontal direction, two permanent magnets **53** may be arranged in the depth direction. Two permanent magnets **53** arranged in the depth direction may have the same poles facing each other and thus apply, to the space between movable contactor **3** and the pair of fixed contacts (first fixed contact **21** and second fixed contact **22**), a magnetic field extending in the horizontal direction.

The number of permanent magnets **53** is not limited to two and may be one or may be three or more.

Movable contactor **3** may include a depression into which at least a portion of magnetic shield **4** fits.

Embodiment 2

Hereinafter, electromagnetic relay **1**A and contact apparatus **10**A according to Embodiment 2 will be described with reference to FIG. **7** and FIG. **8**. Elements that are substantially the same as those in Embodiment 1 are assigned the same reference marks, and descriptions of the elements will be omitted. In FIG. **7**, illustrations of some of the elements of electromagnetic relay **1**A (for example, holder **6** and housing **8**) are omitted.

In contact apparatus **10**A according to the present exemplary embodiment, the direction of the magnetic field that two permanent magnets **53** apply to the space between movable contactor **3** and the pair of fixed contacts is the depth direction. In order to provide such a magnetic field, two permanent magnets **53** are arranged in front of and behind movable contactor **3** and have different poles facing each other. Two permanent magnets **53** overlap at least a portion of magnetic shield **4**A in the depth direction.

Furthermore, the shape of magnetic shield **4**A according to the present exemplary embodiment is different from the shape of magnetic shield **4** according to Embodiment 1. In magnetic shield **4**A, first shield portion **41** includes two protrusions **411** and main piece **412**. One of two protrusions **411** is provided at a front end portion of main piece **412**. The other of two protrusions **411** is provided at a back end portion of main piece **412**. Each protrusion **411** protrudes downward from main piece **412**. The configuration of main piece **412** is substantially the same as that in Embodiment 1.

Second shield portion **42** includes two protrusions **421** and main piece **422**. One of two protrusions **421** is provided at a front end portion of main piece **422**. The other of two protrusions **421** is provided at a back end portion of main piece **422**. Each protrusion **421** protrudes downward from main piece **422**. The configuration of main piece **422** is substantially the same as that in Embodiment 1.

In first shield portion **41**, a magnetic circuit extending from the front surface to the back surface of first shield portion **41** is formed. In other words, a magnetic circuit extending from one of two protrusions **411** to the other is formed. As compared to the case where protrusion **411** is not provided, the surface area of first shield portion **41** is large, meaning that the magnetic field applied by two permanent magnets **53** is likely to pass through the magnetic circuit formed by first shield portion **41**.

In second shield portion **42**, a magnetic circuit extending from the front surface to the back surface of second shield portion **42** is formed. In other words, a magnetic circuit extending from one of two protrusions **421** to the other is formed. As compared to the case where protrusion **421** is not provided, the surface area of second shield portion **42** is large, meaning that the magnetic field applied by two permanent magnets **53** is likely to pass through the magnetic circuit formed by second shield portion **42**.

The direction of the magnetic field applied by at least one permanent magnet (in the present exemplary embodiment, two permanent magnets) **53** (hereinafter referred to as "the direction of application") between movable contactor **3** and the pair of fixed contacts (first fixed contact **21** and second fixed contact **22**) is the depth direction. The area of protrusion **411** in the cross-section orthogonal to the direction of application is greater than the area of protrusion **411** in the cross-section extending along both the direction of application and the vertical direction (the cross-section orthogonal to the horizontal direction). The area of protrusion **421** in the cross-section orthogonal to the direction of application is greater than the area of protrusion **421** in the cross-section extending along both the direction of application and the vertical direction. Since the area of each of protrusions **411**, **421** in the cross-section orthogonal to the direction of application is relatively large as just mentioned, the magnetic field applied by two permanent magnets **53** is likely to pass through the magnetic circuit formed by each of first shield portion **41** and second shield portion **42**.

As can be appreciated from the foregoing, contact apparatus **10**A according to Embodiment 2 includes the following elements. Contact apparatus **10**A includes: a pair of fixed

contacts that are first fixed contact **21** and second fixed contact **22**; movable contactor **3**; at least one permanent magnet **53**; and magnetic shield **4**A. Movable contactor **3** includes: a pair of movable contacts **31**, **32** that correspond one-to-one with the pair of fixed contacts; and movable contactor body **33** that electrically connects the pair of movable contacts **31**, **32**. Movable contactor **3** can move between the closed position in which each of the pair of movable contacts **31**, **32** is in contact with the corresponding one of the pair of fixed contacts and the open position in which each of the pair of movable contacts **31**, **32** is separate from the corresponding one of the pair of fixed contacts. At least one permanent magnet **53** applies, to the space between movable contactor **3** and the pair of fixed contacts, a magnetic field extending in the depth direction. The depth direction is orthogonal to both the horizontal direction in which the pair of movable contacts **31**, **32** are arranged and the vertical direction in which movable contactor **3** moves. Magnetic shield **4**A includes first shield portion **41** and second shield portion **42**. First shield portion **41** overlaps at least a portion of first fixed contact **21** in the vertical direction and is disposed on the side of movable contactor **3** that is opposite the side on which first fixed contact **21** is disposed. Second shield portion **42** overlaps at least a portion of second fixed contact **22** in the vertical direction and is disposed on the side of movable contactor **3** that is opposite the side on which second fixed contact **22** is disposed.

[Variations of Embodiment 2]

Hereinafter, variations of Embodiment 2 will be listed. The following variations may be implemented in appropriate combinations.

Magnetic shield **4**A does not need to include joining portions **43**. In other words, first shield portion **41** and second shield portion **42** do not need to be connected via joining portions **43**.

The number of protrusions **411** of first shield portion **41** may be one or may be three or more. No protrusions **411** may be included in first shield portion **41**.

The number of protrusions **421** of second shield portion **42** may be one or may be three or more. No protrusions **421** may be included in second shield portion **42**.

When first shield portion **41** (or second shield portion **42**) includes no protrusion **411** (or **421**) and when first shield portion **41** (or second shield portion **42**) includes only one protrusion **411** (or **421**), it is preferable that first shield portion **41** (or second shield portion **42**) be thick enough in the vertical direction. This is advantageous in that the magnetic field produced by two permanent magnets **53** is likely to pass through first shield portion **41** (or second shield portion **42**). The thickness of first shield portion **41** (or second shield portion **42**) in the vertical direction is preferably at least half of the thickness of movable contactor **3** in the vertical direction, for example. The thickness of first shield portion **41** (or second shield portion **42**) in the vertical direction is more preferably at least one time as great as the thickness of movable contactor **3** in the vertical direction.

Instead of being arranged in the depth direction, two permanent magnets **53** may be arranged in the horizontal direction. Two permanent magnets **53** arranged in the horizontal direction may have the same poles facing each other and thus apply, to the space between movable contactor **3** and the pair of fixed contacts (first fixed contact **21** and second fixed contact **22**), a magnetic field extending in the depth direction.

The number of permanent magnets **53** is not limited to two and may be one or may be three or more.

Movable contactor **3** may include a depression into which at least a portion of magnetic shield **4**A fits.

SUMMARY

According to the exemplary embodiments, etc., described above, the following aspects are disclosed.

Contact apparatus **10** (**10**A) according to the first aspect includes: first fixed contact **21**; movable contactor **3** including movable contact **31** facing first fixed contact **21**; magnetic shield **4** (**4**A) configured to move in conjunction with movable contactor **3** and including first shield portion **41**, second shield portion **42**, and joining portion **43** joining first shield portion **41** and second shield portion **42** together; and a magnet (permanent magnet **53** on the left side in FIG. **1**) having a first surface facing first fixed contact **21**, movable contact **31**, and first shield portion **41**, wherein first fixed contact **21**, movable contact **31**, and first shield portion **41** are arranged in the following order: first fixed contact **21**; movable contact **31**; and first shield portion **41**, and first shield portion **41** includes protrusion **411** extending along the first surface of permanent magnet **53** (corresponding to the right side surface of permanent magnet **53** on the left side).

With the above-described configuration, as compared to the case where magnetic shield **4** (**4**A) is not provided, end point E**1** of the electric arc is less likely to move on the surface of movable contactor **3** that faces magnetic shield **4** (**4**A). Therefore, it is possible to reduce the likelihood that after the electric arc generated in the space between first fixed contact **21** and movable contact **31** is drawn to the outside of said space, end point E**1** of the electric arc will move so as to make approximately one revolution around movable contactor **3**. When end point E**1** of the electric arc makes approximately one revolution around movable contactor **3**, the electric arc may be transferred to the space between first fixed contact **21** and movable contact **31** and transition into a shorter electric arc; however, this is less likely to happen with the above-described configuration. In this manner, it is possible to reduce the likelihood that an electric arc will be repeatedly generated in the space between first fixed contact **21** and movable contact **31**; therefore, time required to extinguish the electric arc can be reduced.

Furthermore, with the above-described configuration, as compared to the case where protrusion **411** is not provided, the area of a surface of magnetic shield **4** (**4**A) that faces permanent magnet **53** is large, meaning that the magnetic field of permanent magnet **53** is likely to pass through the magnetic circuit formed by magnetic shield **4** (**4**A).

The contact apparatus **10** (**10**A) according to the second aspect further includes second fixed contact **22** and another magnet (permanent magnet **53** on the right side in FIG. **1**). Movable contactor **3** further includes movable contact **32** facing second fixed contact **22**, first fixed contact **21** and second fixed contact **22** are electrically connected to each other, permanent magnet **53** has a second surface (corresponding to the left side surface of permanent magnet **53** on the right side) facing second fixed contact **22**, movable contact **32**, and second shield portion **42**, second fixed contact **22**, movable contact **32**, and second shield portion **42** are arranged in the following order: second fixed contact **22**; movable contact **32**; and second shield portion **42**, and second shield portion **42** includes protrusion **421** extending along the left side surface of permanent magnet **53** on the right side, and the right side surface of permanent magnet **53**

on the left side and the left side surface of permanent magnet **53** on the right side face each other.

With the above-described configuration, advantageous effects that are substantially the same as those produced according to the first aspect described above can be obtained.

In the contact apparatus **10** (**10**A) according to the third aspect, the right side surface of permanent magnet **53** on the left side and the left side surface of permanent magnet **53** on the right side have the same polarity.

Furthermore, in the contact apparatus **10** (**10**A) according to the fourth aspect, protrusion **411** of first shield portion **41** extends downward from an end portion of first shield portion **41** along the first surface of permanent magnet **53** (corresponding to the right side surface of permanent magnet **53** on the left side).

With the above-described configuration, as compared to the case where protrusion **411** is not provided, the surface area of magnetic shield **4** (**4**A) is large, meaning that the magnetic field of permanent magnet **53** is likely to pass through the magnetic circuit formed by magnetic shield **4** (**4**A).

Furthermore, in the contact apparatus **10** (**10**A) according to the fifth aspect, protrusion **411** of first shield portion **41** extends downward from an end portion of first shield portion **41** along the first surface of permanent magnet **53**, and protrusion **421** of second shield portion **42** extends downward from an end portion of second shield portion **42** along the second surface of permanent magnet **53**.

With the above-described configuration, as compared to the case where protrusion **411** or protrusion **421** is not provided, the surface area of magnetic shield **4** (**4**A) is large, meaning that the magnetic field of permanent magnet **53** is likely to pass through the magnetic circuit formed by magnetic shield **4** (**4**A).

Furthermore, in the contact apparatus **10** (**10**A) according to the sixth aspect, magnetic shield **4** (**4**A) is in contact with movable contactor **3**.

With the above-described configuration, as compared to the case where there is a gap between magnetic shield **4** (**4**A) and movable contactor **3**, the magnetic field is less likely to be applied to the electric arc on the surface of movable contactor **3** that faces magnetic shield **4** (**4**A). Therefore, it is possible to further reduce the likelihood that end point E**1** of the electric arc will move so as to make one revolution around movable contactor **3**.

Furthermore, in the contact apparatus **10** (**10**A) according to the seventh aspect, movable contactor **3** includes a depression and magnetic shield **4** fits into the depression of movable contactor **3**, or magnetic shield **4** includes a depression (fitting hole H**1**) and movable contactor **3** fits into the depression (fitting hole H**1**) of magnetic shield **4**.

With the above-described configuration, it is possible to reduce the likelihood that a gap will be generated between magnetic shield **4** (**4**A) and movable contactor **3**.

Furthermore, in the contact apparatus **10** (**10**A) according to the eighth aspect, a permeability of magnetic shield **4** (**4**A) is greater than a permeability of movable contactor **3**.

With the above-described configuration, it is possible to increase the advantageous effect of blocking, by magnetic shield **4** (**4**A), the magnetic field that is applied to movable contactor **3**.

The features other than the first aspect are not essential to contact apparatus **10** (**10**A) and therefore can be omitted as appropriate.

Furthermore, electromagnetic relay **1** (**1**A) according to the ninth aspect includes: contact apparatus **10** (**10**A); and electromagnetic apparatus **7** located below contact apparatus **10** (**10**A) and including shaft **78**, wherein shaft **78** moves in conjunction with movable contactor **3**, when shaft **78** moves upward, movable contact **31** approaches first fixed contact **21**, and when shaft **78** moves downward, movable contact **31** separates from first fixed contact **21**.

With the above-described configuration, as compared to the case where magnetic shield **4** (**4**A) is not provided, it is possible to reduce the likelihood that an electric arc will be repeatedly generated in the space between the fixed contact and movable contact **31**; therefore, time required to extinguish the electric arc can be reduced.

REFERENCE SIGNS LIST

1, **1**A electromagnetic relay
10, **10**A contact apparatus
21 first fixed contact
22 second fixed contact
3 movable contactor
31, **32** movable contact
33 movable contactor body
4, **4**A magnetic shield
41 first shield portion
411, **421** protrusion
412, **422** main piece
42 second shield portion
43 joining portion
51 case
52 joining body
53 permanent magnet
54 bridge part
6 holder
61 upper wall part
62 side plate
63 spring bearing part
64 contact pressure spring
78 shaft
8 housing
H**1**, H**2** fitting hole (depression)
H**3** through-hole
W**1**, W**2** width

The invention claimed is:

1. A contact apparatus comprising:

a first fixed contact;

a movable contactor including a first movable contact facing the first fixed contact;

a magnetic shield configured to move in conjunction with the movable contactor and including a first shield portion, a second shield portion, and a joining portion joining the first shield portion and the second shield portion together; and

a first magnet having a first surface facing the first fixed contact, the first movable contact, and the first shield portion, wherein:

the first movable contact is disposed between the first fixed contact and the first shield portion

the first shield portion includes a first protrusion and a first main piece, the first protrusion extending downwardly from the first main piece along the first surface of the first magnet, and

the joining portion extends upwardly from the first main piece.

2. The contact apparatus according to claim 1, further comprising:

a second fixed contact; and

a second magnet, wherein:

the movable contactor further includes a second movable contact facing the second fixed contact,

the first fixed contact and the second fixed contact are electrically connected to each other,

the second magnet has a second surface facing the second fixed contact, the second movable contact, and the second shield portion,

the second movable contact is disposed between the second fixed contact and the second shield,

the second shield portion includes a second protrusion and a second main piece, the second protrusion extending downwardly from the second main piece along the second surface of the second magnet, and

the first surface of the first magnet and the second surface of the second magnet face each other.

3. The contact apparatus according to claim 2, wherein

the first surface of the first magnet and the second surface of the second magnet have a same polarity.

4. The contact apparatus according to claim 2, wherein

the first protrusion of the first shield portion extends downwardly from an end portion of the first main piece of the first shield portion along the first surface of the first magnet, and

the second protrusion of the second shield portion extends downwardly from an end portion of the second main piece of the second shield portion along the second surface of the second magnet.

5. The contact apparatus according to claim 2, wherein the joining portion extends upwardly from the second main piece.

6. The contact apparatus according to claim 5, wherein:

the joining portion comprises a pair of joining portions, and

a part of the movable contactor is disposed between the pair of joining portions.

7. The contact apparatus according to claim 6, wherein:

the movable contactor has a center portion having a smaller width than end portions sandwiching the center portion, and

the center portion is disposed between the pair of joining portions and the pair of joining portions are disposed between the end portions.

8. The contact apparatus according to claim 1, wherein

the first protrusion of the first shield portion extends downwardly from an end portion of the first main piece of the first shield portion along the first surface of the first magnet.

9. The contact apparatus according to claim 1, wherein

the magnetic shield is in contact with the movable contactor.

10. The contact apparatus according to claim 9, wherein

the movable contactor includes a depression and the magnetic shield fits into the depression of the movable contactor, or

the magnetic shield includes a depression and the movable contactor fits into the depression of the magnetic shield.

11. The contact apparatus according to claim 1, wherein

a permeability of the magnetic shield is greater than a permeability of the movable contactor.

12. An electromagnetic relay comprising:

the contact apparatus according to claim 1; and

an electromagnet apparatus located below the contact apparatus and including a shaft, wherein

the shaft moves in conjunction with the movable contactor,

when the shaft moves upward, the first movable contact approaches the first fixed contact, and

when the shaft moves downwardly, the first movable contact separates from the first fixed contact.

* * * * *