US 20250283514A1

(19) United States
(12) Patent Application Publication
KOMUKAI et al.
(10) Pub. No.: US 2025/0283514 A1
(43) Pub. Date: Sep. 11, 2025

(54) **CLUTCH DEVICE, MOTORCYCLE, AND METHOD FOR PRODUCING PRESSURE PLATE**

(71) Applicant: **Kabushiki Kaisha F.C.C.**, Hamamatsu-shi, Shizuoka (JP)

(72) Inventors: **Jun KOMUKAI**, Hamamatsu-shi (JP); **Satoshi OTA**, Hamamatsu-shi (JP); **Yasunori HIGASHI**, Hamamatsu-shi (JP); **Makoto KAMBARA**, Hamamatsu-shi (JP)

(21) Appl. No.: **19/100,233**

(22) PCT Filed: **Sep. 12, 2023**

(86) PCT No.: **PCT/JP2023/033202**

§ 371 (c)(1),
(2) Date: **Jun. 2, 2025**

(30) **Foreign Application Priority Data**

Sep. 13, 2022 (JP) ..... 2022-145634
Dec. 21, 2022 (JP) ..... 2022-204201

**Publication Classification**

(51) **Int. Cl.**

| | |
|---|---|
| ***F16D 13/70*** | (2006.01) |
| ***B22D 17/08*** | (2006.01) |
| ***B22D 17/26*** | (2006.01) |
| ***F16D 23/12*** | (2006.01) |

(52) **U.S. Cl.**

CPC ..... ***F16D 13/70*** (2013.01); ***B22D 17/08*** (2013.01); ***B22D 17/26*** (2013.01); ***F16D 13/54*** (2013.01); ***F16D 23/12*** (2013.01); *F16D 2013/565* (2013.01); *F16D 2023/123* (2013.01); *F16D 2250/0007* (2013.01)

(57) **ABSTRACT**

A clutch device includes a pressure plate movable toward or away from a clutch center and rotatable with respect to the clutch center. The pressure plate includes a flange extending radially outward from an outer circumferential edge of a body, pressure-side fitting teeth projecting in a first direction from a front surface of the flange, holding input-side rotating plates and output-side rotating plates, and being arranged in a circumferential direction, and a flange-side recessed portion recessed in the first direction from a back surface of the flange. As seen in an axial direction of an output shaft, the flange-side recessed portion at least partially overlaps one of the pressure-side fitting teeth.

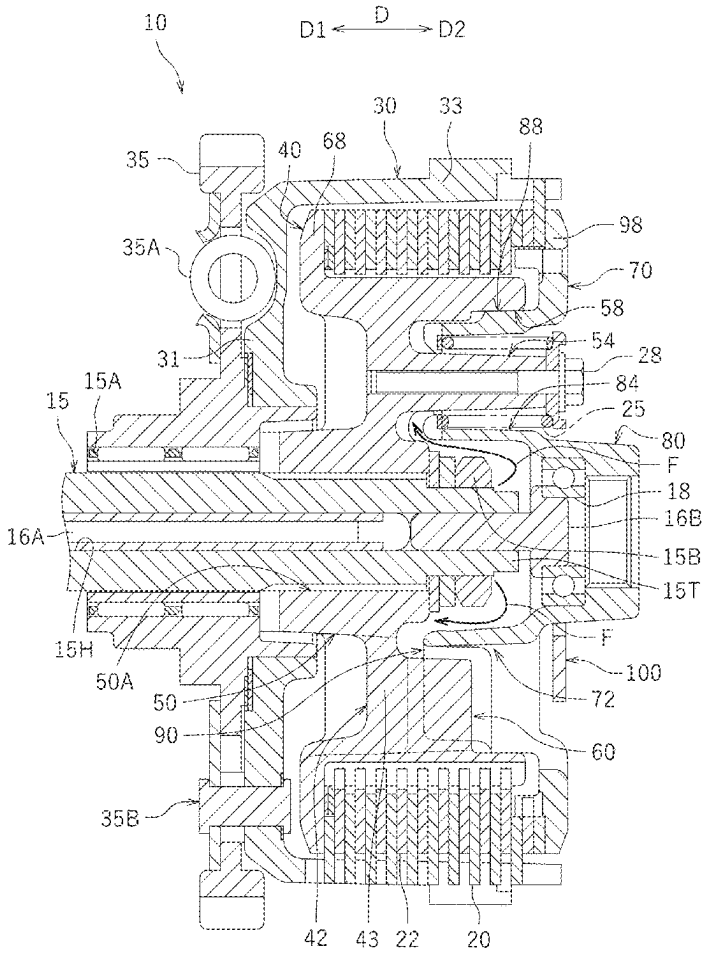

FIG. 1

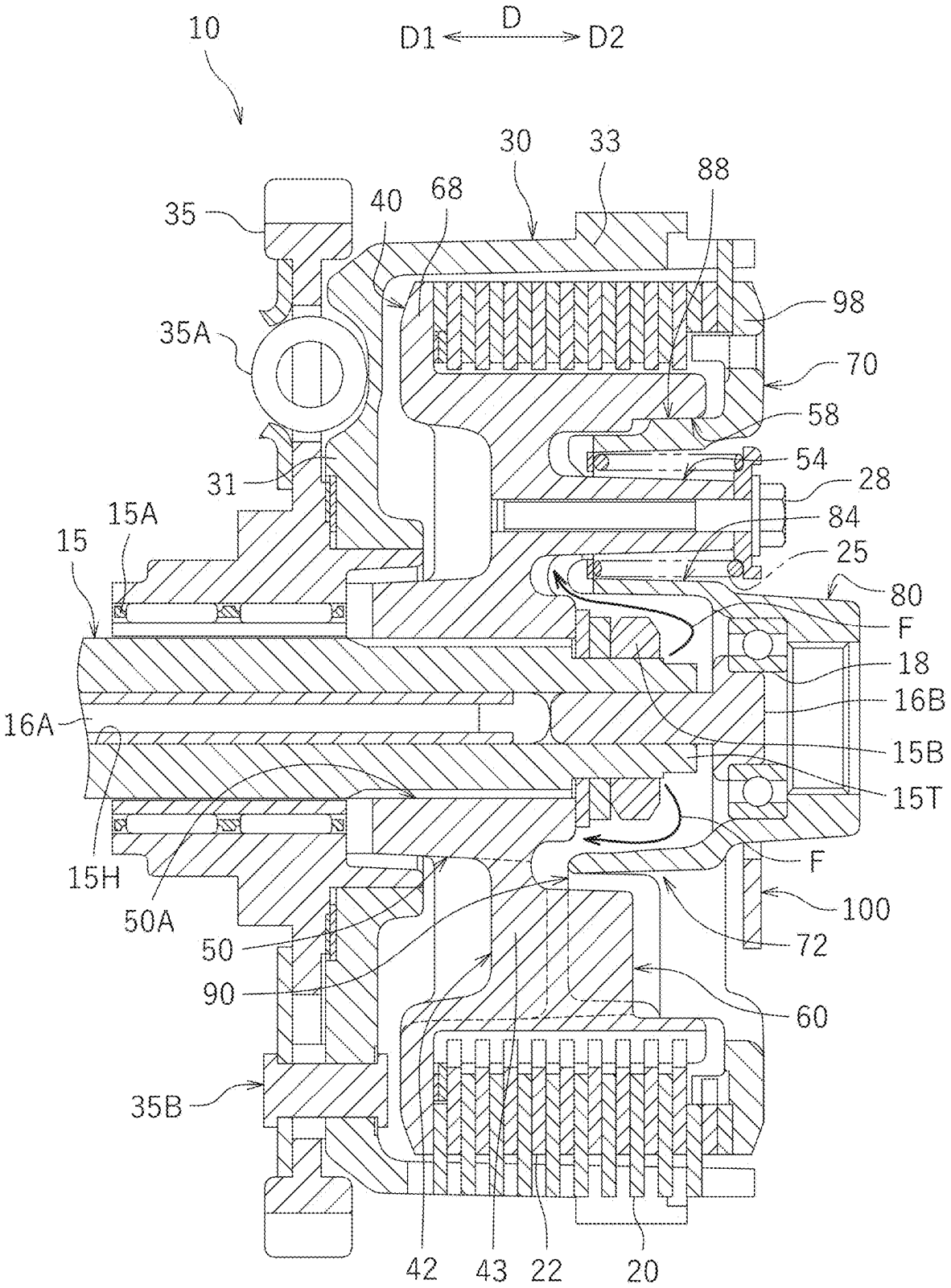
10
D
D1
D2
30
33
88
35
40
68
98
35A
70
58
54
31
28
15A
84
15
25
80
F
18
16B
16A
15B
15T
15H
F
100
50A
72
50
90
60
35B
42
43
22
20

FIG.2

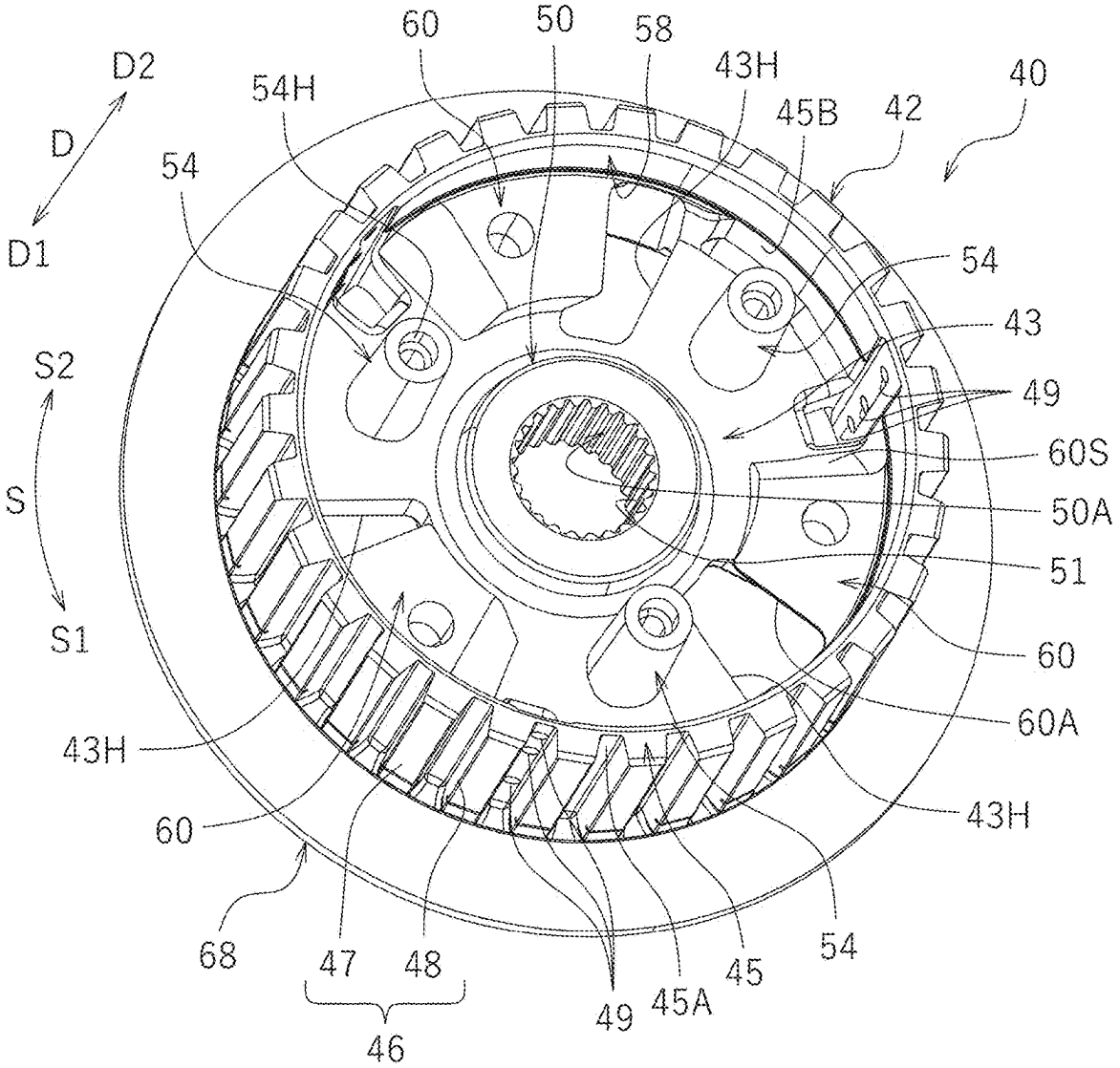
60
50
58
43H
40
D2
54H
45B
42
D
54
D1
54
43
S2
49
60S
S
50A
51
S1
60
60A
43H
43H
60
68
47
48
45
54
49
45A
46

FIG.3

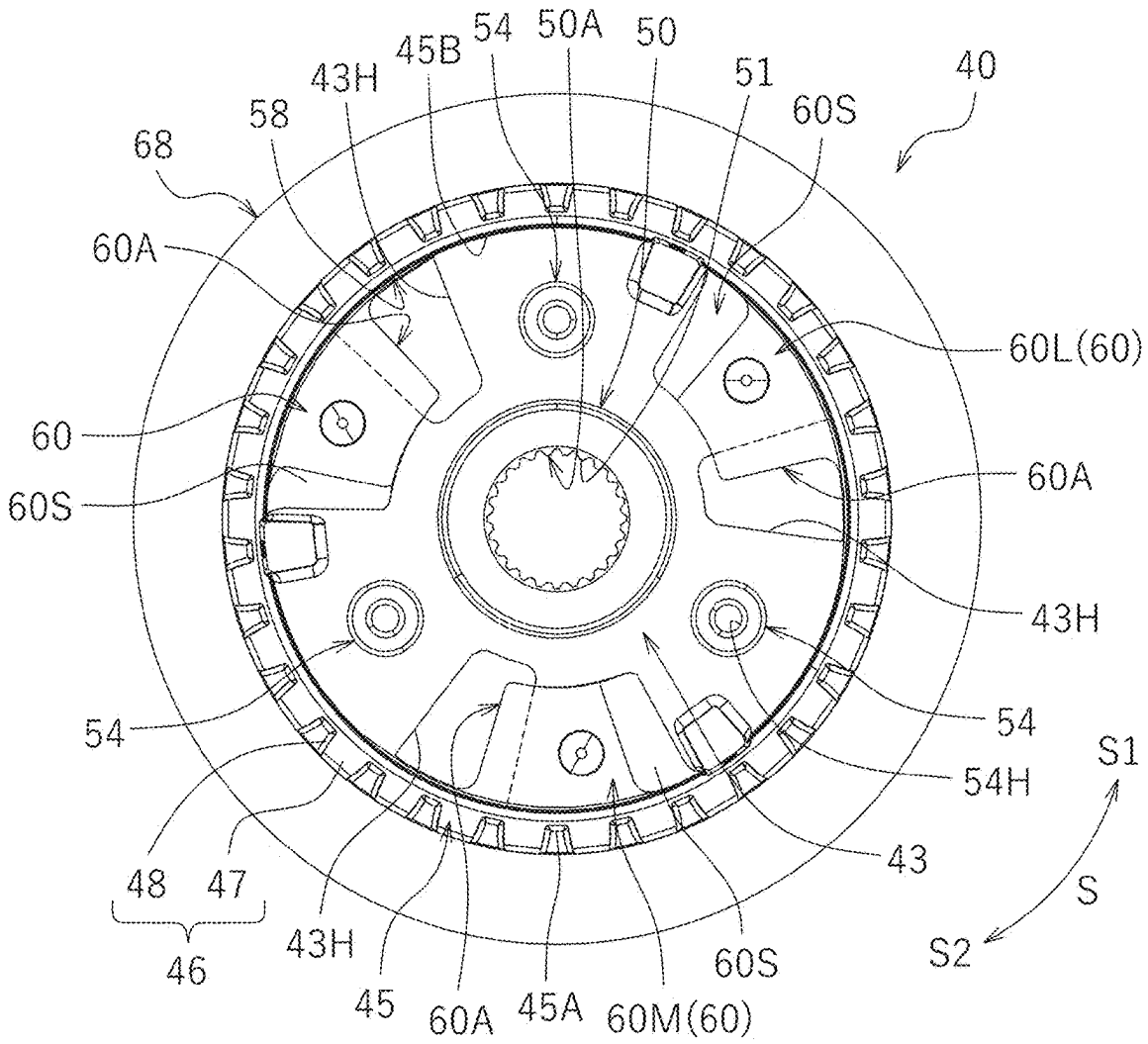
40
68
58
43H
45B
54
50A
50
51
60S
60A
60L(60)
60
60S
60A
43H
54
54
54H
S1
43
S
S2
48
47
46
43H
45
60A
45A
60M(60)
60S

FIG.4

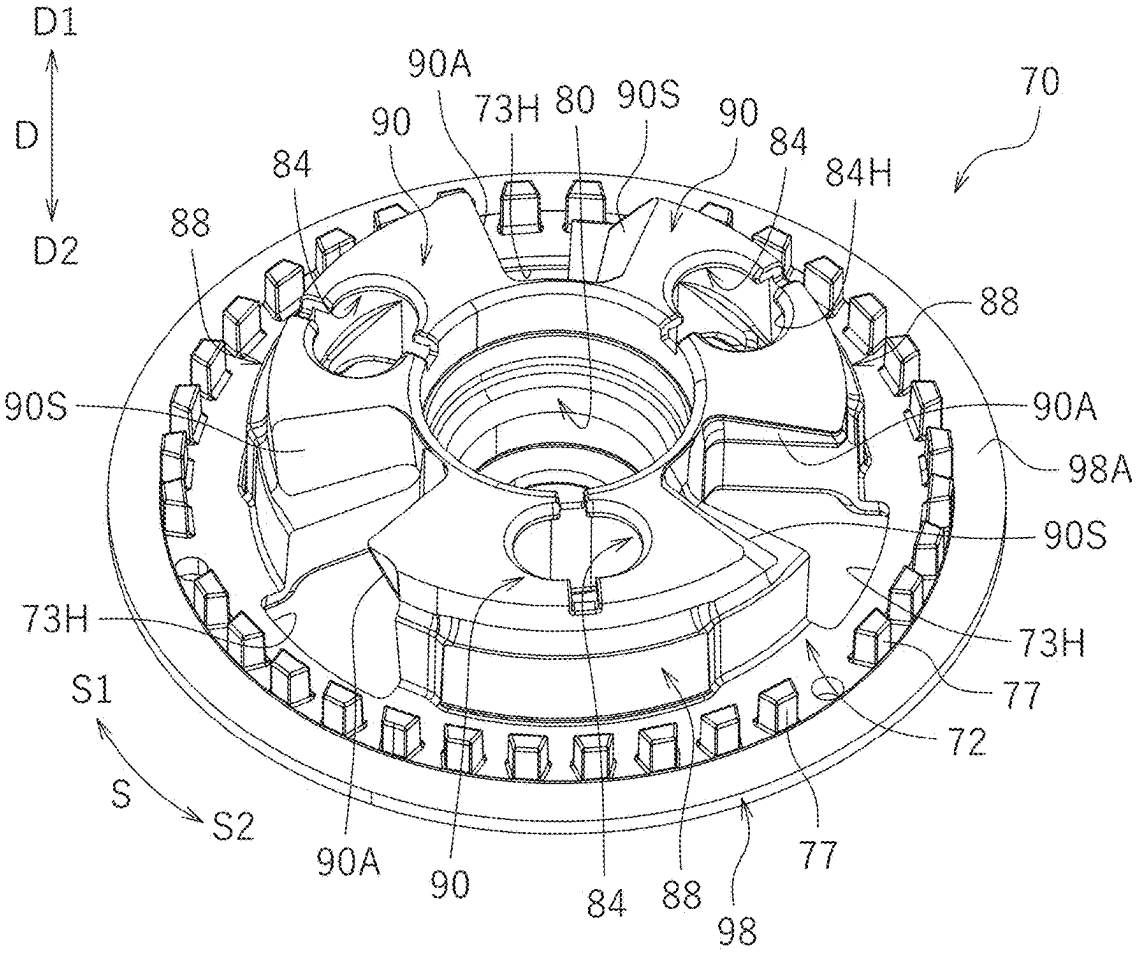
D1
D
D2
90A
73H
80
90S
90
90
84
84
84H
70
88
88
90S
90A
98A
90S
73H
73H
77
72
S1
S
S2
90A
90
84
88
77
98

FIG.5

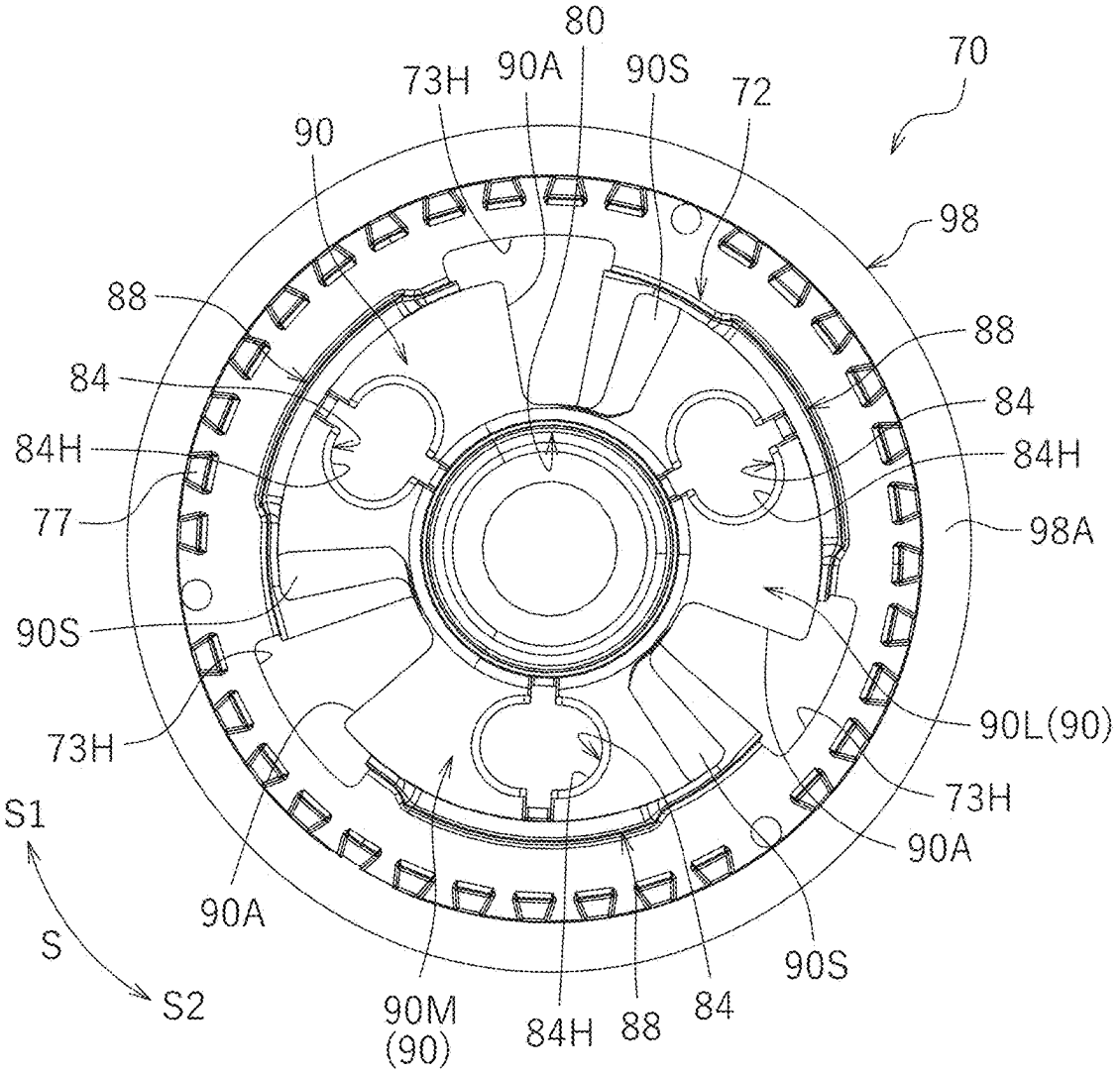
80
70
73H
90A
90S
72
90
98
88
88
84
84
84H
84H
77
98A
90S
90L(90)
73H
73H
S1
90A
90A
S
90S
S2
90M
(90)
84H
88
84

FIG.6

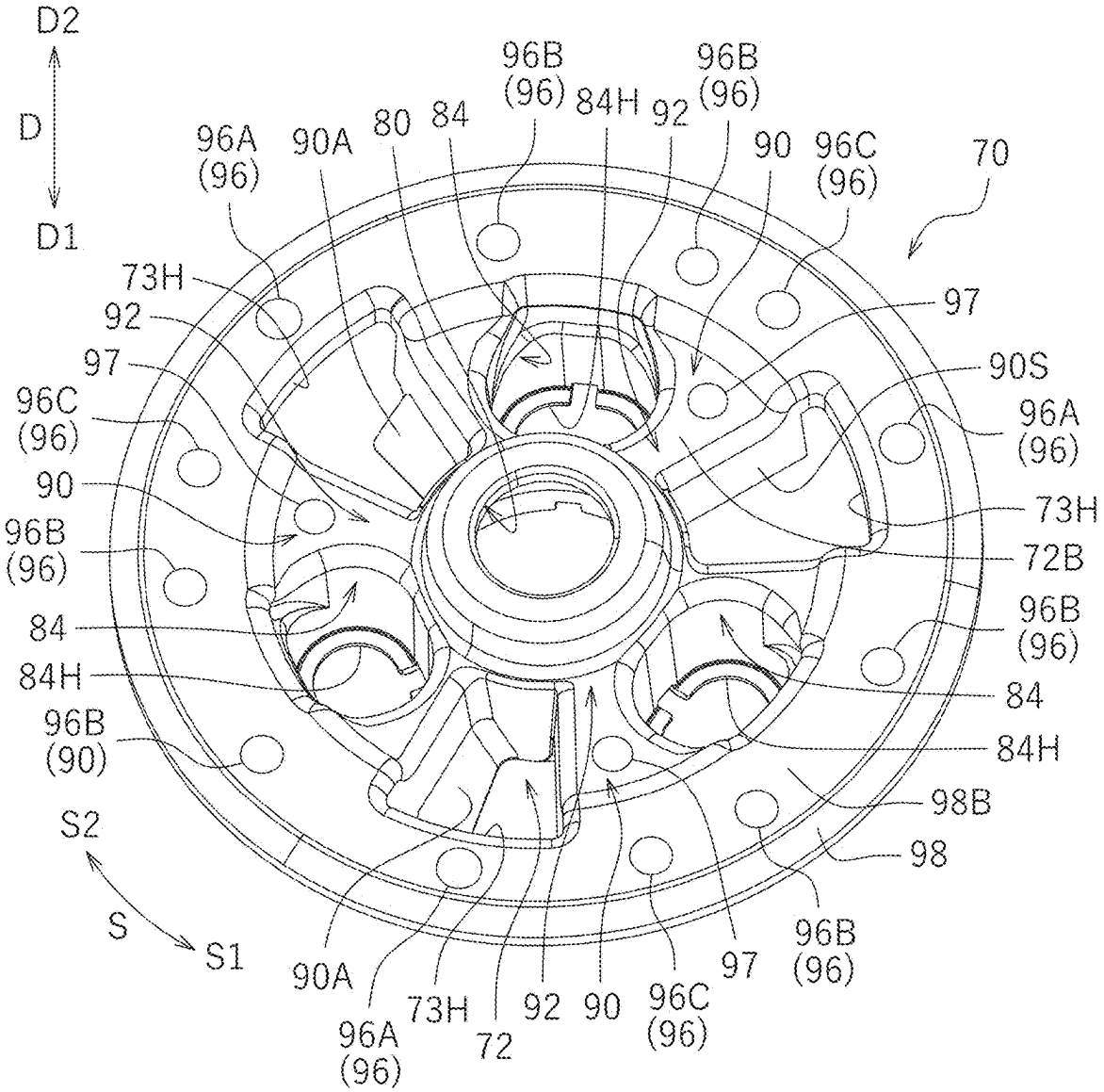
D2
D
D1
96B (96)
96B (96)
84H
92
84
80
90A
96A (96)
90
96C (96)
70
73H
92
97
97
90S
96C (96)
96A (96)
90
73H
96B (96)
72B
84
96B (96)
84H
84
96B (90)
84H
98B
S2
98
S
S1
90A
96A (96)
73H
72
92
90
96C (96)
97
96B (96)

FIG. 7

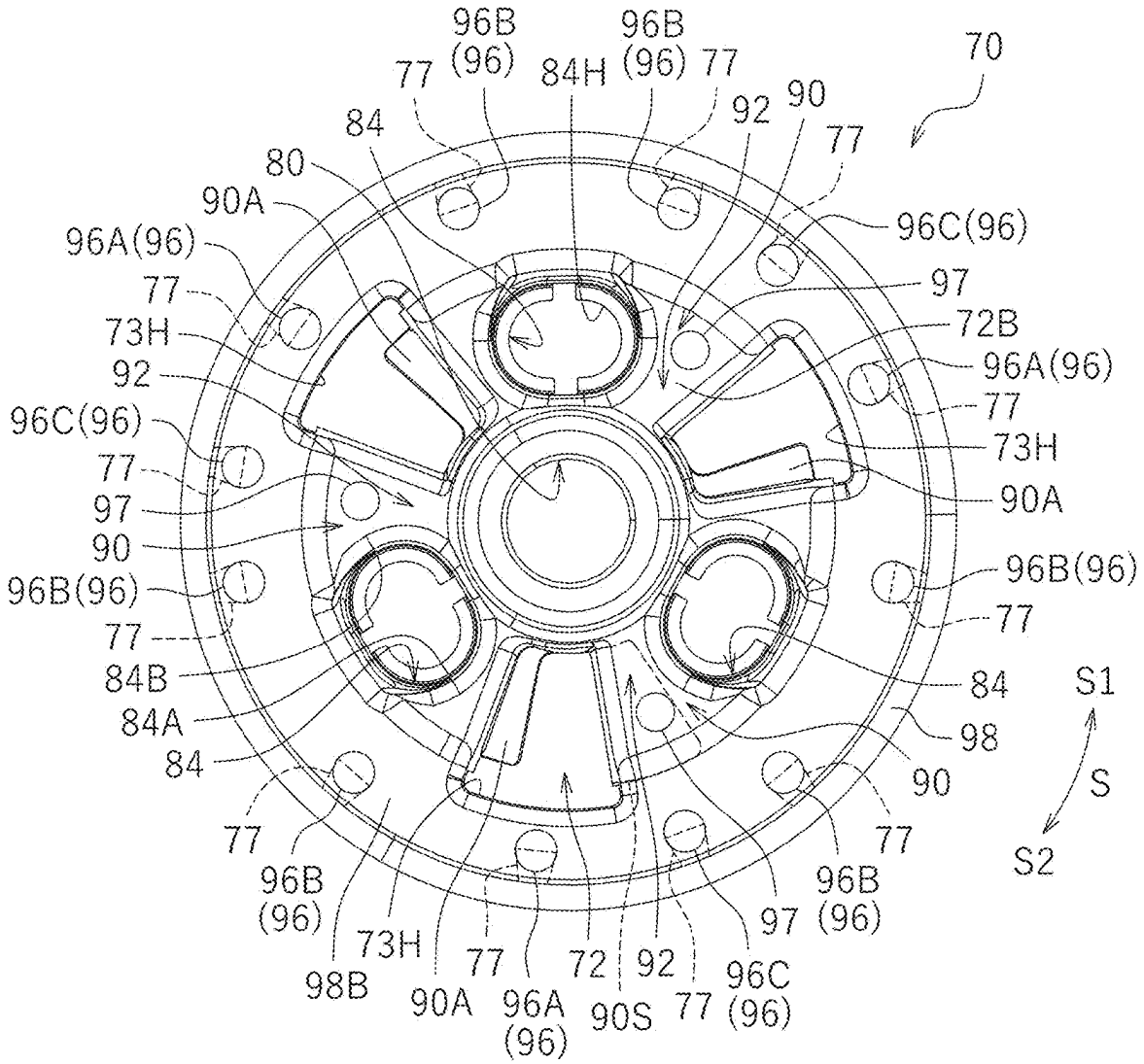
70
96B (96)
84H
96B (96)
77
77
92
90
77
84
80
90A
96A(96)
96C(96)
77
97
73H
72B
92
96A(96)
96C(96)
77
77
73H
97
90A
90
96B(96)
96B(96)
77
77
84B
84
S1
84A
98
84
90
S
77
77
S2
96B (96)
96B (96)
73H
97
98B
77
72
92
96C (96)
90A
96A (96)
90S
77

FIG.8

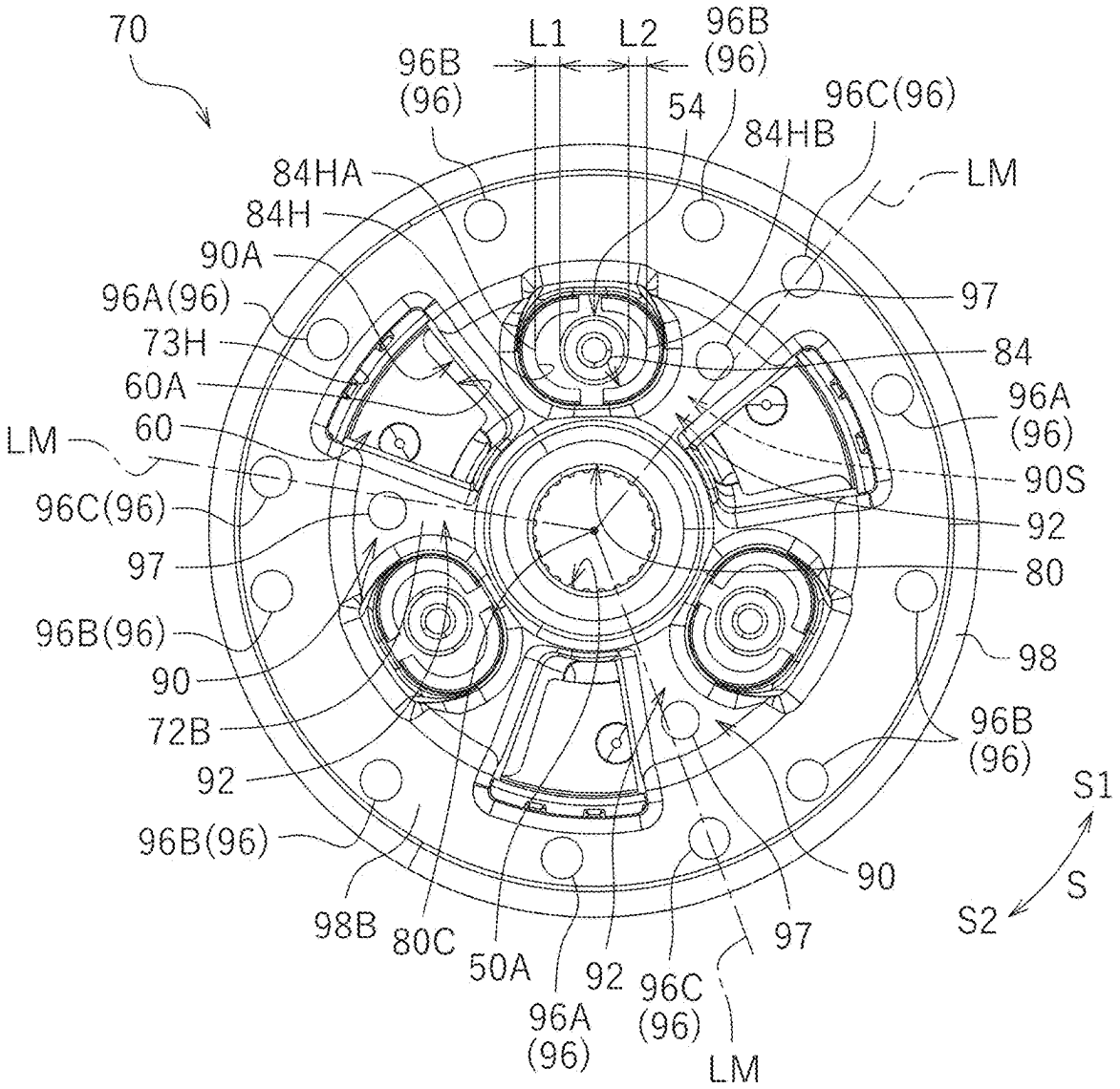
70
L1
L2
96B (96)
96B (96)
54
96C(96)
84HB
LM
84HA
84H
90A
96A(96)
73H
60A
60
LM
96C(96)
97
96B(96)
90
72B
92
96B(96)
98B
80C
50A
96A (96)
92
96C (96)
LM
97
90
S1
S
S2
96B (96)
98
80
92
90S
96A (96)
84
97

FIG.9A

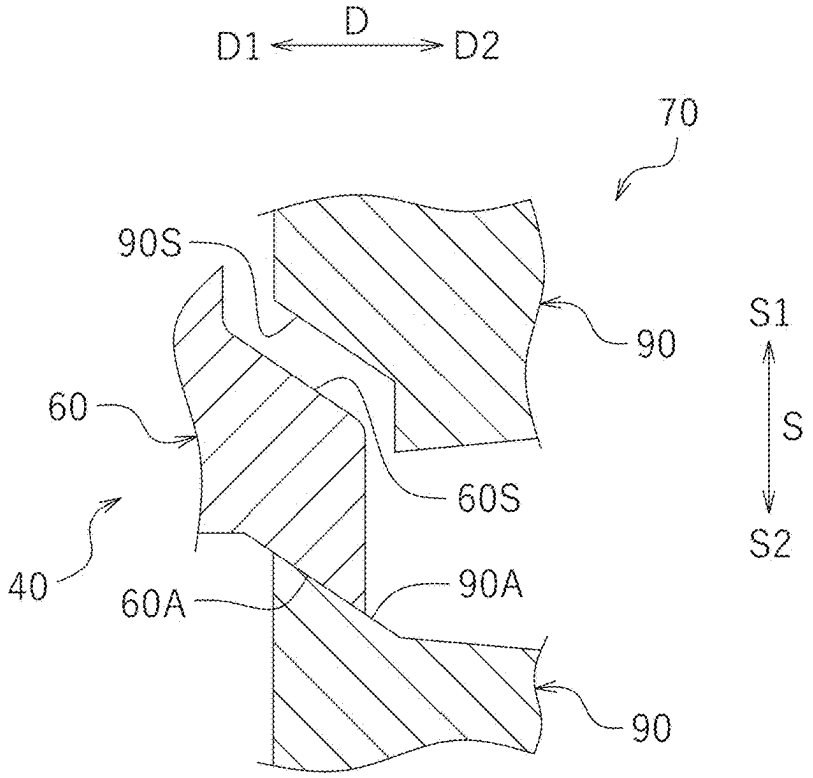
D
D1
D2
70
90S
90
S1
S
S2
60
60S
40
60A
90A
90

FIG.9B

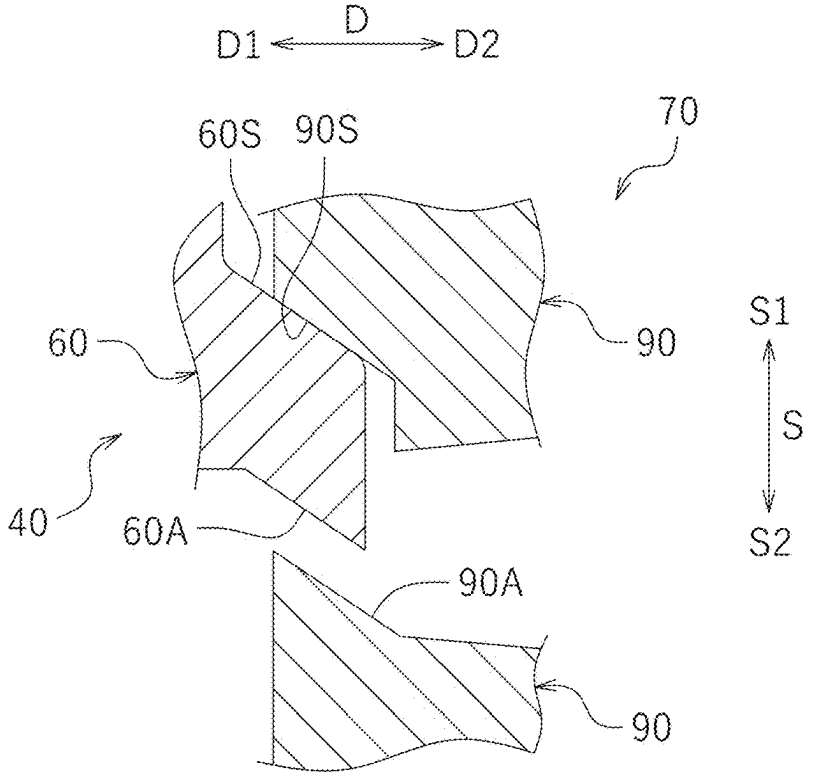
D
D1
D2
70
60S
90S
90
S1
S
S2
60
40
60A
90A
90

FIG.10

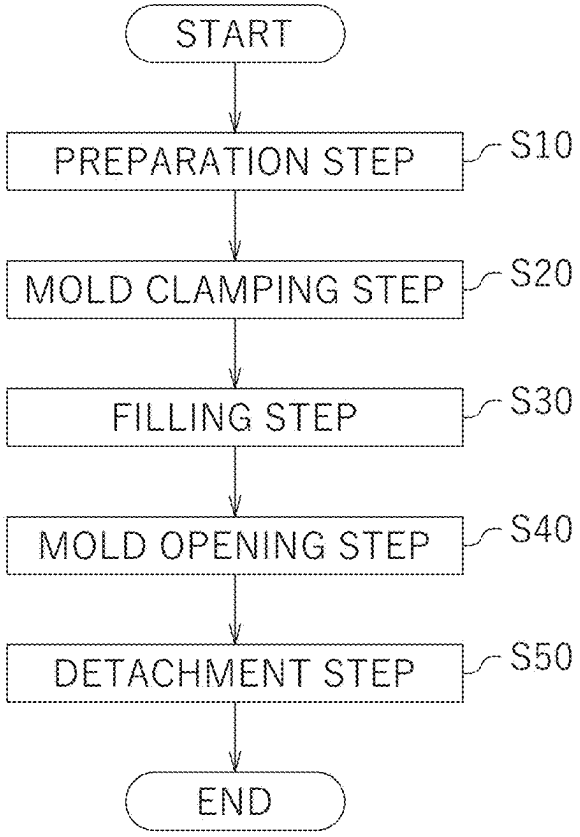
START
PREPARATION STEP
S10
MOLD CLAMPING STEP
S20
FILLING STEP
S30
MOLD OPENING STEP
S40
DETACHMENT STEP
S50
END

FIG.11

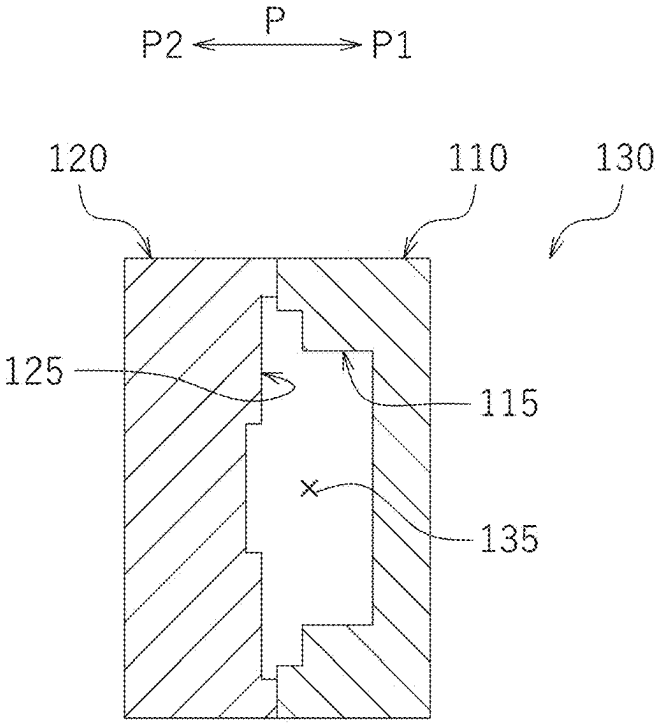
P
P2
P1
120
110
130
125
115
135

FIG.12

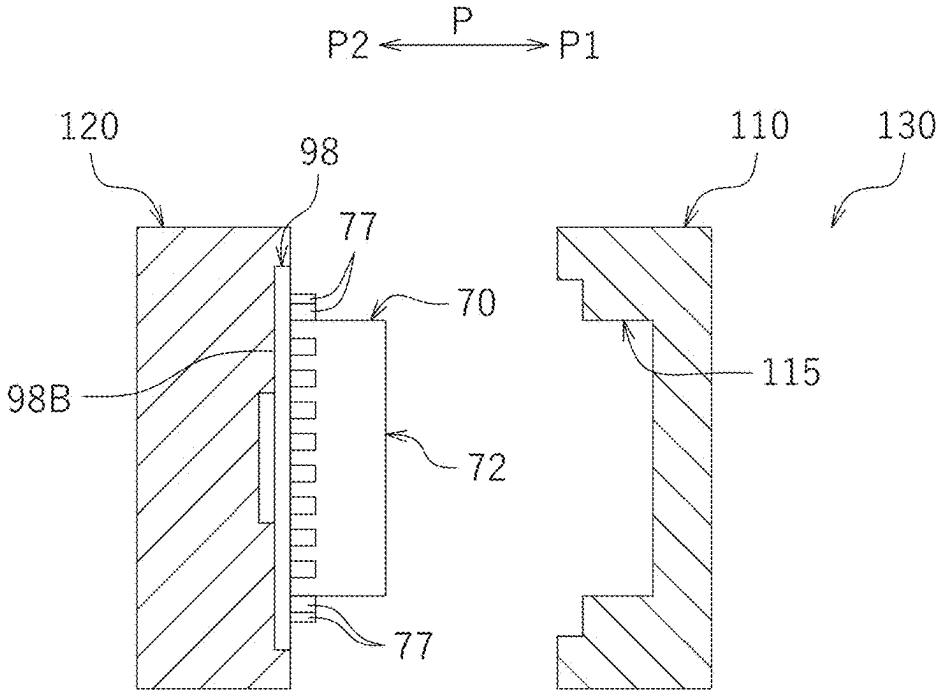
P
P2
P1
120
98
77
70
98B
72
77
110
130
115

FIG.13

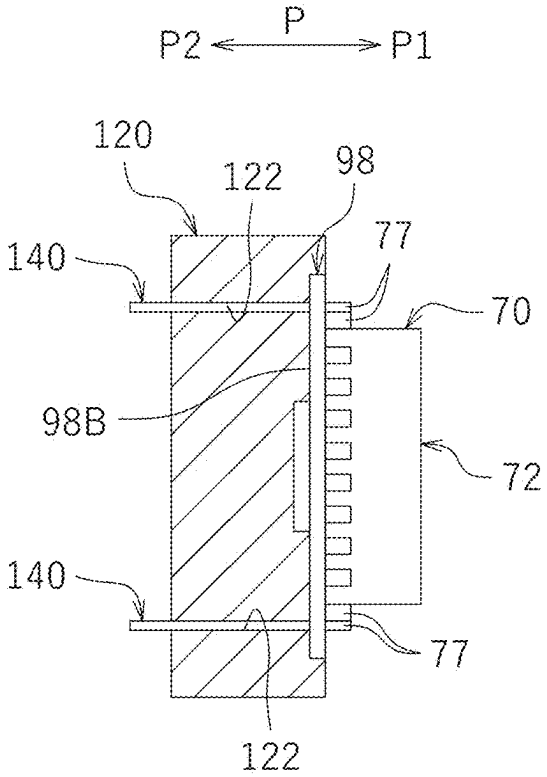
P
P2
P1
120
122
98
140
77
70
98B
72
140
77
122

# CLUTCH DEVICE, MOTORCYCLE, AND METHOD FOR PRODUCING PRESSURE PLATE

## TECHNICAL FIELD

**[0001]** The present invention relates to a clutch device, a motorcycle, and a method for producing a pressure plate, and more particularly, a clutch device allowing or blocking, as needed, transfer of a rotation driving force of an input shaft, rotationally drivable by a prime mover such as an engine or the like, to an output shaft, a motorcycle including the same, and a method for producing a pressure plate usable in the clutch device.

## BACKGROUND ART

**[0002]** Conventional vehicles such as motorcycles or the like include clutch devices. A clutch device is located between an engine and a drive wheel, and allows or blocks transfer of a rotation driving force of the engine to the drive wheel. The clutch device generally includes a plurality of input-side rotating plates rotatable by a rotation driving force of the engine and a plurality of output-side rotating plates connected with an output shaft that transfers the rotation driving force to the drive wheel. The input-side rotating plates and the output-side rotating plates are alternately arranged in a stacking direction, and the input-side rotating plates and the output-side rotating plates are brought into pressure contact with each other or are separated from each other so that transfer of a rotation driving force is allowed or blocked.

**[0003]** Patent Literature 1, for example, discloses a clutch device including a clutch center (clutch member) holding output-side rotating plates (driven clutch plates) and a pressure plate (pressure member) movable toward or away from the clutch center. The pressure plate is configured to be capable of pressing the input-side rotating plates and the output-side rotating plates. In this manner, the clutch device includes an assembly of the clutch center and the pressure plate.

**[0004]** In the clutch device of Patent Literature 1, the clutch center includes center-side fitting teeth (outer circumferential wall having a spline formed therein) as a member holding the output-side rotating plates, and the pressure plate includes pressure-side fitting teeth also as a member holding the output-side rotating plates. The clutch device is configured such that in a state where the clutch center and the pressure plate are assembled together, the center-side fitting teeth and the pressure-side fitting teeth overlap each other in a radial direction.

## CITATION LIST

### Patent Literature

**[0005]** Patent Literature 1: Japanese Patent No. 6894792

## SUMMARY OF INVENTION

### Technical Problem

**[0006]** Such a clutch device including the clutch center and the pressure plate assembled together tends to be relatively heavy because the clutch device holds a plurality of input-side rotating plates and a plurality of output-side rotating plates. Therefore, a vehicle including the clutch device such as a motorcycle or the like may also be heavy. In consideration of the running performance (e.g., gas mileage), it is preferred that the clutch device is lightweight. However, the clutch device also needs to have a certain level of rigidity.

**[0007]** The present invention, made in light of such a point, has an object of providing a clutch device including a pressure plate that is sufficiently rigid and lightweight, a motorcycle including the same, and a method for producing the pressure plate.

### Solution to Problem

**[0008]** A clutch device according to the present invention is a clutch device allowing or blocking transfer of a rotation driving force of an input shaft to an output shaft. The clutch device includes a clutch center housed in a clutch housing holding a plurality of input-side rotating plates rotationally drivable by rotational driving of the input shaft, the clutch center holding a part of a plurality of output-side rotating plates alternately arranged with the input-side rotating plates, the clutch center being rotationally drivable together with the output shaft; and a pressure plate movable toward or away from the clutch center and rotatable with respect to the clutch center, the pressure plate being capable of pressing the input-side rotating plates and the output-side rotating plates. The pressure plate includes a body, a flange extending radially outward from an outer circumferential edge of the body, a plurality of pressure-side fitting teeth formed to project in a first direction from a first direction-side surface of the flange, holding another part of the plurality of output-side rotating plates, and being arranged in a circumferential direction, where the first direction is a direction in which the pressure plate moves toward the clutch center, and a second direction is a direction in which the pressure plate moves away from the clutch center, a plurality of pressure-side cam portions provided in the body and each including at least one of a pressure-side assist cam surface and a pressure-side slipper cam surface, the pressure-side assist cam surface generating a force in a direction from the pressure plate toward the clutch center, in order to increase a pressing force between the input-side rotating plates and the output-side rotating plates, when the pressure plate rotates with respect to the clutch center, and the pressure-side slipper cam surface separating the pressure plate from the clutch center, in order to decrease the pressing force between the input-side rotating plates and the output-side rotating plates, when the pressure plate rotates with respect to the clutch center, and

**[0009]** a body-side recessed portion recessed in the first direction from a second direction-side surface of the body. As seen in an axial direction of the output shaft, the body-side recessed portion at least partially overlaps one of the pressure-side slipper cam surfaces.

**[0010]** A method for producing a pressure plate according to the present invention is a method for producing a pressure plate including a body, a flange extending radially outward from an outer circumferential edge of the body, a plurality of pressure-side fitting teeth formed to project from a front surface of the flange, holding output-side rotating plates, and being arranged in a circumferential direction, a plurality of pressure-side cam portions provided in the body and each including at least one of a pressure-side assist cam surface and a pressure-side slipper cam surface, the pressure-side assist cam surface generating a force in a direction from the

pressure plate toward the clutch center, in order to increase a pressing force between input-side rotating plates and the output-side rotating plates, when the pressure plate rotates with respect to the clutch center, and the pressure-side slipper cam surface separating the pressure plate from the clutch center, in order to decrease the pressing force between the input-side rotating plates and the output-side rotating plates, when the pressure plate rotates with respect to the clutch center, and a body-side recessed portion formed in a back surface of the body. The method includes a preparation step of preparing a mold including a fixed mold and a movable mold allowed to approach, or to be separated from, the fixed mold, a mold clamping step of causing the movable mold to approach the fixed mold to close the mold, a filling step of filling a molding space formed by the movable mold and the fixed mold with a metal material, a mold opening step of cooling and solidifying the metal material to form the pressure plate by molding and then separating the movable mold from the fixed mold to open the mold, and a detachment step of, where a direction in which the movable mold is moved with respect to the fixed mold is a mold moving direction, pushing a core pin against a portion, of the back surface of the body of the pressure plate fixed to the movable mold, that overlaps one of the pressure-side cam portions as seen in the mold moving direction to detach the pressure plate from the movable mold.

## Advantageous Effects of Invention

**[0011]** The present invention can provide a clutch device including a pressure plate that is sufficiently rigid and lightweight, and a motorcycle including the same, and a method for producing the pressure plate.

## BRIEF DESCRIPTION OF DRAWINGS

**[0012]** FIG. **1** is a cross-sectional view of a clutch device according to one embodiment.

**[0013]** FIG. **2** is a perspective view of a clutch center according to one embodiment.

**[0014]** FIG. **3** is a plan view of the clutch center according to one embodiment.

**[0015]** FIG. **4** is a perspective view of a pressure plate according to one embodiment.

**[0016]** FIG. **5** is a plan view of the pressure plate according to one embodiment.

**[0017]** FIG. **6** is a perspective view of the pressure plate according to one embodiment.

**[0018]** FIG. **7** is a plan view of the pressure plate according to one embodiment.

**[0019]** FIG. **8** is a plan view illustrating a state where the clutch center and the pressure plate according to one embodiment are assembled.

**[0020]** FIG. **9**A is a schematic view illustrating effects of a center-side assist cam surface and a pressure-side assist cam surface.

**[0021]** FIG. **9**B is a schematic view illustrating effects of a center-side slipper cam surface and a pressure-side slipper cam surface.

**[0022]** FIG. **10** is a flowchart illustrating a method for producing the pressure plate according to one embodiment.

**[0023]** FIG. **11** is a cross-sectional view schematically illustrating a state where a mold is closed.

**[0024]** FIG. **12** is a cross-sectional view schematically illustrating a state where the mold is opened as a result of a movable mold being separated from a fixed mold.

**[0025]** FIG. **13** is a cross-sectional view schematically illustrating a state where a core pin is pushed against a rear surface of the pressure plate secured to the movable mold.

## DESCRIPTION OF EMBODIMENTS

**[0026]** Embodiments of a clutch device according to the present invention will be described hereinafter with reference to the drawings. The embodiments described herein are, of course, not intended to particularly limit the present invention. Elements and features having the same functions are denoted by the same reference signs, and description for the same elements and features will not be repeated or will be simplified as appropriate.

**[0027]** FIG. **1** is a cross-sectional view of a clutch device **10** according to this embodiment. The clutch device **10** is provided in a vehicle such as a motorcycle or the like, for example. The clutch device **10** allows or blocks transfer of a rotation driving force of an input shaft (crankshaft) of an engine of the motorcycle to an output shaft **15**, for example. The clutch device **10** allows or blocks transfer of a rotation driving force of the input shaft to a drive wheel (rear wheel) through the output shaft **15**. The clutch device **10** is located between the engine and a transmission.

**[0028]** In the following description, a direction in which a pressure plate **70** and a clutch center **40** of the clutch device **10** are aligned will be referred to as a direction D, a direction in which the pressure plate **70** moves toward the clutch center **40** will be referred to as a first direction D**1**, and a direction in which the pressure plate **70** moves away from the clutch center **40** will be referred to as a second direction D**2**. A circumferential direction of the clutch center **40** and the pressure plate **70** will be referred to as a circumferential direction S. Regarding two of pressure-side cam portions **90** located along the circumferential direction S, a circumferential direction from one pressure-side cam portion **90** to the other pressure-side cam portion **90** will be referred to as a first circumferential direction S**1** (see FIG. **5**), and a circumferential direction from the other pressure-side cam portion **90** to the one pressure-side cam portion **90** will be referred to as a second circumferential direction S**2** (see FIG. **5**). In this embodiment, an axial direction of the output shaft **15**, an axial direction of a clutch housing **30**, an axial direction of the clutch center **40**, and an axial direction of the pressure plate **70** are the same as the direction D. The pressure plate **70** and the clutch center **40** rotate in the first circumferential direction S**1**. It should be noted that the directions described above are defined simply for convenience of description, and are not intended to limit the state of installation of the clutch device **10** and do not limit the present invention.

**[0029]** As illustrated in FIG. **1**, the output shaft **15** is a hollow shaft. One end of the output shaft **15** rotatably supports an input gear **35** described below and the clutch housing **30** through a needle bearing **15**A. The output shaft **15** securely supports the clutch center **40** through a nut **15**B. That is, the output shaft **15** rotates together with the clutch center **40**. The other end of the output shaft **15** is coupled with a transmission (not shown) of a motorcycle, for example.

**[0030]** As illustrated in FIG. **1**, the output shaft **15** includes, in a hollow portion **15**H thereof, a push rod **16**A and a push member **16**B adjacent to the push rod **16**A. The

hollow portion **15**H serves as a channel of clutch oil. Clutch oil flows in the output shaft **15**, that is, in the hollow portion **15**H. The push rod **16**A and the push member **16**B are slidable in the hollow portion **15**H of the output shaft **15**. The push rod **16**A has one end (left end in FIG. **1**) coupled with a clutch operation lever (not shown) of the motorcycle, and slides in the hollow portion **15**H by an operation made on the clutch operation lever and presses the push member **16**B in the second direction D**2**. A part of the push member **16**B projects outward of the output shaft **15** (in the second direction D**2** in this embodiment) and is coupled with a release bearing **18** provided in the pressure plate **70**. The push rod **16**A and the push member **16**B are thinner than the inner diameter of the hollow portion **15**H so that flowability of clutch oil is obtained in the hollow portion **15**H.

**[0031]** The clutch housing **30** is made of an aluminum alloy. The clutch housing **30** has a bottomed cylindrical shape. As illustrated in FIG. **1**, the clutch housing **30** includes a bottom wall **31** having a substantially circular shape, and a side wall **33** extending in the second direction D**2** from an edge of the bottom wall **31**. The clutch housing **30** holds a plurality of input-side rotating plates **20**.

**[0032]** As illustrated in FIG. **1**, the input gear **35** is located on the bottom wall **31** of the clutch housing **30**. The input gear **35** is secured to the bottom wall **31** by a rivet **35**B through a torque damper **35**A. The input gear **35** meshes with a driving gear (not shown) that rotates by rotational driving of the input shaft of the engine. The input gear **35** is rotationally drivable together with the clutch housing **30**, independently of the output shaft **15**.

**[0033]** The input-side rotating plates **20** are rotationally drivable by rotational driving of the input shaft. As illustrated in FIG. **1**, the input-side rotating plates **20** are held on an inner circumferential surface of the side wall **33** of the clutch housing **30**. The input-side rotating plates **20** are held by the clutch housing **30** by spline fitting. The input-side rotating plates **20** are displaceable along the axial direction of the clutch housing **30**. The input-side rotating plates **20** are rotatable together with the clutch housing **30**.

**[0034]** The input-side rotating plates **20** are pushed against output-side rotating plates **22**. The input-side rotating plates **20** are ring-shaped flat plates. Each of the input-side rotating plates **20** is molded by punching a thin plate of a steel plate cold commercial (SPCC) material into a ring shape. Friction members (not shown) of a plurality of paper sheets are attached to front and back surfaces of each of the input-side rotating plates **20**. A groove with a depth of several micrometers to several tens of micrometers is formed between the friction members to hold clutch oil.

**[0035]** As illustrated in FIG. **1**, the clutch center **40** is housed in the clutch housing **30**. The clutch center **40** and the clutch housing **30** are concentrically located. The clutch center **40** includes a cylindrical body **42** and a flange **68** extending radially outward from an outer circumferential edge of the body **42**. The clutch center **40** holds the plurality of output-side rotating plates **22** arranged alternately with the input-side rotating plates **20** in the direction D. The clutch center **40** is rotationally drivable together with the output shaft **15**.

**[0036]** As illustrated in FIG. **2**, the body **42** includes a ring-shaped base wall **43**, an outer circumferential wall **45** located radially outward of the base wall **43** and extending in the second direction D**2**, an output shaft holding portion **50** located at the center of the base wall **43**, a plurality of center-side cam portions **60** connected with the base wall **43** and the outer circumferential wall **45**, and a center-side fitting portion **58**.

**[0037]** The output shaft holding portion **50** has a cylindrical shape. The output shaft holding portion **50** has an insertion hole **51**, in which the output shaft **15** is inserted and spline-fitted. The insertion hole **51** penetrates the base wall **43**. An inner circumferential surface **50**A, of the output shaft holding portion **50**, defining the insertion hole **51** has a plurality of spline grooves formed along an axial direction thereof. The output shaft **15** is coupled with the output shaft holding portion **50**.

**[0038]** As illustrated in FIG. **2**, the outer circumferential wall **45** of the clutch center **40** is located radially outward of the output shaft holding portion **50**. An outer circumferential surface **45**A of the outer circumferential wall **45** has a spline fitting portion **46** formed thereat. The spline fitting portion **46** includes a plurality of center-side fitting teeth **47** extending in the axial direction of the clutch center **40** along the outer circumferential surface **45**A of the outer circumferential wall **45**, a plurality of spline grooves **48** each formed between adjacent ones of the center-side fitting teeth **47** and extending in the axial direction of the clutch center **40**, and oil flow holes **49**. The center-side fitting teeth **47** hold the output-side rotating plates **22**. The plurality of center-side fitting teeth **47** are arranged in the circumferential direction S. The plurality of center-side fitting teeth **47** are arranged at an equal interval in the circumferential direction S. The plurality of center-side fitting teeth **47** have the same shape. The center-side fitting teeth **47** project radially outward from the outer circumferential surface **45**A of the outer circumferential wall **45**. The number of the center-side fitting teeth **47** may be a multiple of the number of the center-side cam portions **60**. In this embodiment, the center-side cam portions **60** are provided in the number of three, and the center-side fitting teeth **47** are provided in the number of **30**, as described below. The number of the center-side fitting teeth **47** does not need to be a multiple of the number of the center-side cam portions **60**. The oil flow holes **49** penetrate the outer circumferential wall **45** in the radial direction. The oil flow holes **49** are formed between adjacent ones of the center-side fitting teeth **47**. That is, the oil flow holes **49** are formed in the spline grooves **48**. The oil flow holes **49** are formed to the side of the center-side cam portions **60**. The oil flow holes **49** are formed to the side of center-side slipper cam surfaces **60**S of the center-side cam portions **60**. The oil flow holes **49** are formed ahead of the center-side slipper cam surfaces **60**S in the first circumferential direction S**1**. The oil flow holes **49** are formed ahead of bosses **54** described below in the second circumferential direction S**2**. In this embodiment, three oil flow holes **49** are formed at each of three positions in the circumferential direction S of the outer circumferential wall **45**. The oil flow holes **49** are located at an equal interval in the circumferential direction S. The oil flow holes **49** cause the inside and the outside of the clutch center **40** to communicate with each other. The oil flow holes **49** allow clutch oil, flowing out from the output shaft **15** into the clutch center **40**, to flow to the outside of the clutch center **40**. In this embodiment, the oil flow holes **49** allow the clutch oil, flowing on an inner circumferential surface **45**B of the outer circumferential wall **45**, to flow to the outside of the clutch center **40**. At least a part of the oil flow holes **49** is provided at a position facing a pressure-side fitting portion **88** described below.

**[0039]** The output-side rotating plates **22** are held by the spline fitting portion **46** of the clutch center **40** and the pressure plate **70**. A part of the output-side rotating plates **22** is held by the center-side fitting teeth **47** and the spline grooves **48** of the clutch center **40** by spline fitting. Another part of the output-side rotating plates **22** is held by pressure-side fitting teeth **77** (see FIG. **4**; described below) of the pressure plate **70**. The output-side rotating plates **22** are displaceable along the axial direction of the clutch center **40**. The output-side rotating plates **22** are rotatable together with the clutch center **40**.

**[0040]** The output-side rotating plates **22** are pushed against the input-side rotating plates **20**. The output-side rotating plates **22** are ring-shaped flat plates. Each of the output-side rotating plates **22** is molded by punching a thin plate of an SPCC material into a ring shape. Front and back surfaces of each of the output-side rotating plates **22** have grooves with depths of several micrometers to several tens of micrometers to hold clutch oil. The front and back surfaces of each of the output-side rotating plates **22** are subjected to a surface hardening treatment to enhance abrasion resistance thereof. The friction members, described above as being provided on the input-side rotating plates **20**, may be provided on the output-side rotating plates **22** instead of on the input-side rotating plates **20**, or may be provided on both the input-side rotating plates **20** and the output-side rotating plates **22**.

**[0041]** Each of the center-side cam portions **60** is formed to have a truncated quadrangular pyramid shape having a cam surface formed of a slope acting as an Assist & Slipper (registered trademark) mechanism. The cam surface as the Assist & Slipper (registered trademark) mechanism generates an assist torque as a force increasing a pressing force (contact pressure force) between the input-side rotating plates **20** and the output-side rotating plates **22** or a slipper torque as a force separating the input-side rotating plates **20** and the output-side rotating plates **22** from each other on an early stage and shifting these plates into a half-clutch state. The center-side cam portions **60** project ahead of the base wall **43** in the second direction D**2**. As illustrated in FIG. **3**, the center-side cam portions **60** are arranged at an equal interval in the circumferential direction S of the clutch center **40**. In this embodiment, the clutch center **40** includes three center-side cam portions **60**, but the number of the center-side cam portions **60** is not limited to three.

**[0042]** As illustrated in FIG. **3**, the center-side cam portions **60** are located radially outward of the output shaft holding portion **50**. Each of the center-side cam portions **60** includes a center-side assist cam surface **60**A and the center-side slipper cam surface **60**S. The center-side assist cam surface **60**A is configured to generate a force in a direction from the pressure plate **70** toward the clutch center **40** (in such a direction as to cause the pressure plate **70** to approach the clutch center **40**), in order to increase a pressing force (contact pressure force) between the input-side rotating plates **20** and the output-side rotating plates **22**, when the clutch center **40** rotates with respect to the pressure plate **70**. In this embodiment, when this force is generated, the position of the pressure plate **70** with respect to the clutch center **40** does not change, and the pressure plate **70** does not need to approach the clutch center **40** physically. The pressure plate **70** may be physically displaced with respect to the clutch center **40**. The center-side slipper cam surface **60**S is configured to separate the pressure plate **70** from the clutch center **40**, in order to decrease the pressing force (contact pressure force) between the input-side rotating plates **20** and the output-side rotating plates **22**, when the clutch center **40** rotates with respect to the pressure plate **70**. Regarding two of the center-side cam portions **60** adjacent to each other in the circumferential direction S, the center-side assist cam surface **60**A of one center-side cam portion **60**L and the center-side slipper cam surface **60**S of the other center-side cam portion **60**M are opposed to each other in the circumferential direction S.

**[0043]** As illustrated in FIG. **2**, the clutch center **40** includes the plurality of (three in this embodiment) bosses **54**. The bosses **54** support the pressure plate **70**. The plurality of bosses **54** are arranged at an equal interval in the circumferential direction S. Each of the bosses **54** has a cylindrical shape. The bosses **54** are located radially outward of the output shaft holding portion **50**. The bosses **54** extend toward the pressure plate **70** (i.e., in the second direction D**2**). The bosses **54** are located on the base wall **43**. The bosses **54** each have a screw hole **54**H, into which a bolt **28** (see FIG. **1**) is inserted. The screw hole **54**H extends in the axial direction of the clutch center **40**.

**[0044]** As illustrated in FIGS. **2** and **3**, the clutch center **40** has center-side cam holes **43**H penetrating a part of the base wall **43**. The center-side cam holes **43**H penetrate the base wall **43** in the direction D. Each of the center-side cam holes **43**H extends from a position to the side of the output shaft holding portion **50** to the outer circumferential wall **45**. The center-side cam hole **43**H is formed between the center-side assist cam surface **60**A of the center-side cam portion **60** and the boss **54**. As seen in the axial direction of the clutch center **40**, the center-side assist cam surface **60**A overlaps a part of the center-side cam hole **43**H.

**[0045]** As illustrated in FIG. **2**, the center-side fitting portion **58** is located radially outward of the output shaft holding portion **50**. The center-side fitting portion **58** is located radially outward of the center-side cam portions **60**. The center-side fitting portion **58** is located ahead of the center-side cam portions **60** in the second direction D**2**. The center-side fitting portion **58** is formed on the inner circumferential surface **45**B of the outer circumferential wall **45**. The center-side fitting portion **58** is configured to be slidably outserted onto the pressure-side fitting portion **88** (see FIG. **4**) described below. The inner diameter of the center-side fitting portion **58** has a fitting tolerance allowing distribution of clutch oil flowing out of a distal end **15**T (see FIG. **1**) of the output shaft **15** to the pressure-side fitting portion **88**. That is, a gap is formed between the center-side fitting portion **58** and the pressure-side fitting portion **88** described below. In this embodiment, for example, the center-side fitting portion **58** has an inner diameter larger than the outer diameter of the pressure-side fitting portion **88** by 0.1 mm. This dimensional tolerance between the inner diameter of the center-side fitting portion **58** and the outer diameter of the pressure-side fitting portion **88** is appropriately set in accordance with the amount of clutch oil intended to be distributed, and is, for example, 0.1 mm or more and 0.5 mm or less.

**[0046]** As illustrated in FIG. **1**, the pressure plate **70** is movable toward or away from the clutch center **40** and rotatable with respect to the clutch center **40**. The pressure plate **70** is configured to be capable of pressing the input-side rotating plates **20** and the output-side rotating plates **22**. The pressure plate **70** is located concentrically with the

clutch center **40** and the clutch housing **30**. The pressure plate **70** includes a body **72**, and a flange **98** connected with an outer circumferential edge, on the side of the second direction D**2**, of the body **72** and extending radially outward. The body **72** projects ahead of the flange **98** in the first direction D**1**. The pressure plate **70** holds the plurality of output-side rotating plates **22** arranged alternately with the input-side rotating plates **20**. The output-side rotating plates **22** are provided so as to be displaceable in the axial direction of the pressure plate **70**. The output-side rotating plates **22** are provided so as to be rotatable integrally with the pressure plate **70**.

**[0047]** As illustrated in FIG. **4**, the body **72** includes a cylindrical portion **80**, the plurality of pressure-side cam portions **90**, the pressure-side fitting portion **88**, and spring housing portions **84** (see also FIG. **6**).

**[0048]** As illustrated in FIG. **4**, the flange **98** extends radially outward from the outer circumferential edge of the body **72**. In this embodiment, the flange **98** extends radially outward from an outer circumferential edge of the pressure-side fitting portion **88**. The flange **98** has a front surface **98**A and a back surface **98**B (see FIG. **6**). The front surface **98**A applies a pressing force to the input-side rotating plates **20** and the output-side rotating plates **22**. The front surface **98**A contacts the input-side rotating plates **20** and the output-side rotating plates **22** directly or indirectly. The front surface **98**A and the flange **68** of the clutch center **40** sandwich the input-side rotating plates **20** and the output-side rotating plates **22** therebetween. The front surface **98**A is an example of first direction-side surface. The back surface **98**B is an example of second direction-side surface.

**[0049]** The cylindrical portion **80** has a cylindrical shape. The cylindrical portion **80** is integrally formed with the pressure-side cam portions **90**. The cylindrical portion **80** houses the distal end **15**T of the output shaft **15** (see FIG. **1**). The cylindrical portion **80** houses the release bearing **18** (see FIG. **1**). The cylindrical portion **80** receives a pressing force from the push member **16**B. The cylindrical portion **80** receives clutch oil flowing out of the distal end **15**T of the output shaft **15**.

**[0050]** Each of the pressure-side cam portions **90** is formed to have a truncated quadrangular pyramid shape having a cam surface formed of a slope acting as an Assist & Slipper (registered trademark) mechanism. The cam surface as the Assist & Slipper (registered trademark) mechanism slides on the center-side cam portion **60** and generates an assist torque or a slipper torque. The pressure-side cam portion **90** projects ahead of the flange **98** in the first direction D**1**. As illustrated in FIG. **5**, the pressure-side cam portions **90** are arranged at an equal interval in the circumferential direction S of the pressure plate **70**. In this embodiment, the pressure plate **70** includes three pressure-side cam portions **90**, but the number of the pressure-side cam portions **90** is not limited to three.

**[0051]** As illustrated in FIG. **5**, the pressure-side cam portions **90** are located radially outward of the cylindrical portion **80**. Each of the pressure-side cam portions **90** includes a pressure-side assist cam surface **90**A (see also FIG. **7**) and a pressure-side slipper cam surface **90**S. The pressure-side assist cam surface **90**A is located at an end on one side in the circumferential direction S (in this embodiment, at an end on the side of the first circumferential direction S**1**) of the pressure-side cam portion **90**. The pressure-side slipper cam surface **90**S is located at an end on the other side in the circumferential direction S (in this embodiment, at an end on the side of the second circumferential direction S**2**) of the pressure-side cam portion **90**. The pressure-side assist cam surface **90**A is configured to be contactable with the center-side assist cam surface **60**A. The pressure-side assist cam surface **90**A is configured to generate a force in a direction from the pressure plate **70** toward the clutch center **40** (in such a direction as to cause the pressure plate **70** to approach the clutch center **40**), in order to increase a pressing force (contact pressure force) between the input-side rotating plates **20** and the output-side rotating plates **22**, when the pressure plate **70** rotates with respect to the clutch center **40**. The pressure-side slipper cam surface **90**S is configured to be contactable with the center-side slipper cam surface **60**S. The pressure-side slipper cam surface **90**S is configured to separate the pressure plate **70** from the clutch center **40**, in order to decrease the pressing force (contact pressure force) between the input-side rotating plates **20** and the output-side rotating plates **22**, when the pressure plate **70** rotates with respect to the clutch center **40**. Regarding two of the pressure-side cam portions **90** adjacent to each other in the circumferential direction S, the pressure-side assist cam surface **90**A of one pressure-side cam portion **90**L and the pressure-side slipper cam surface **90**S of the other pressure-side cam portion **90**M are opposed to each other in the circumferential direction S.

**[0052]** Effects of the center-side cam portions **60** and the pressure-side cam portions **90** will now be described. Referring to FIG. **9**A, when the rotation speed of the engine increases so that a rotation driving force input to the input gear **35** and the clutch housing **30** is allowed to be transferred to the output shaft **15** through the clutch center **40**, a rotation force in the first circumferential direction S**1** is applied to the pressure plate **70**. Thus, with the effects of the center-side assist cam surface **60**A and the pressure-side assist cam surface **90**A, a force in the first direction DI is generated in the pressure plate **70**. Accordingly, a contact pressure force between the input-side rotating plates **20** and the output-side rotating plates **22** increases.

**[0053]** By contrast, referring to FIG. **9**B, when the rotation speed of the output shaft **15** exceeds the rotation speed of the input gear **35** and the clutch housing **30** and a back torque is generated, a rotation force in the first circumferential direction S**1** is applied to the clutch center **40**. Thus, with the effects of the center-side slipper cam surface **60**S and the pressure-side slipper cam surface **90**S, the pressure plate **70** moves in the second direction D**2** to cancel the contact pressure force between the input-side rotating plates **20** and the output-side rotating plates **22**. In this manner, inconveniences regarding the engine and the transmission caused by the back torque are avoided.

**[0054]** As illustrated in FIGS. **4** and **5**, the pressure plate **70** has pressure-side cam holes **73**H penetrating the body **72** and a part of the flange **98**. The pressure-side cam holes **73**H are located radially outward of the cylindrical portion **80**. Each of the pressure-side cam holes **73**H extends from a position to the side of the cylindrical portion **80** to a position radially outward of the pressure-side fitting portion **88**. The pressure-side cam hole **73**H is formed between adjacent ones of the pressure-side cam portions **90** while penetrating the body **72**. The pressure-side cam hole **73**H is formed between the pressure-side assist cam surface **90**A and the pressure-side slipper cam surface **90**S of adjacent ones of the pressure-side cam portions **90** while penetrating the body

72. As illustrated in FIGS. 5 and 7, as seen in the axial direction of the pressure plate 70, the pressure-side assist cam surface 90A overlaps a part of the pressure-side cam hole 73H.

[0055] As illustrated in FIGS. 6 and 7, the spring housing portions 84 are formed in the pressure-side cam portions 90. The spring housing portions 84 are recessed from the second direction D2 to the first direction D1. The spring housing portions 84 are opened in a plane on the side of the second direction D2 of the body 72 (in this embodiment, in a back surface 72B). Each of the spring housing portions 84 has an oval cross-section. The spring housing portion 84 houses a pressure spring 25 (see FIG. 1). The spring housing portion 84 has an insertion hole 84H, into which the boss 54 (see FIG. 2) is inserted. That is, the insertion hole 84H penetrates the pressure-side cam portion 90. The insertion hole 84H has an oval cross-section.

[0056] As illustrated in FIG. 1, the pressure springs 25 are housed in the spring housing portions 84. Each of the pressure springs 25 is held by the boss 54 inserted into the insertion hole 84H of the spring housing portion 84. The pressure spring 25 biases the pressure plate 70 toward the clutch center 40 (i.e., in the first direction D1). The pressure spring 25 is, for example, a coil spring formed of helically wound spring steel.

[0057] As illustrated in FIG. 4, the pressure-side fitting portion 88 is provided in the main body 72. The pressure-side fitting portion 88 is located radially outward of the pressure-side cam portions 90. The pressure-side fitting portion 88 is located ahead of the pressure-side cam portions 90 in the second direction D2. The pressure-side fitting portion 88 is configured to be slidably insertable into the center-side fitting portion 58 (see FIG. 2).

[0058] As illustrated in FIG. 4, the pressure plate 70 includes the plurality of pressure-side fitting teeth 77 formed on the flange 98. The pressure-side fitting teeth 77 hold the output-side rotating plates 22. The pressure-side fitting teeth 77 are located radially outward of the cylindrical portion 80. The pressure-side fitting teeth 77 are located radially outward of the pressure-side cam portions 90. The pressure-side fitting teeth 77 are located radially outward of the pressure-side fitting portion 88. The pressure-side fitting teeth 77 are formed on the front surface 98A of the flange 98. The pressure-side fitting teeth 77 project in the first direction D1 from the flange 98. The plurality of pressure-side fitting teeth 77 are arranged in the circumferential direction S. The plurality of pressure-side fitting teeth 77 are arranged at an equal interval in the circumferential direction S. In this embodiment, a part of the pressure-side fitting teeth 77 is removed, and thus the interval between the pressure-side fitting teeth 77 sandwiching such a removed part of the pressure-side fitting teeth 77 is longer. The other pressure-side fitting teeth 77 are arranged at an equal interval.

[0059] As illustrated in FIG. 6, the pressure plate 70 includes a plurality of flange-side recessed portions 96 formed in the back surface 98B of the flange 98. The flange-side recessed portions 96 are recessed in the first direction D1 from the back surface 98B of the flange 98. The flange-side recessed portions 96 are recessed from the back surface 98B by, for example, 0.1 mm to 0.5 mm. The flange-side recessed portions 96 may be recessed from the back surface 98B by 0 to 0.1 mm. Alternatively, the flange-side recessed portions 96 may be recessed from the back surface 98B by a depth deeper than 0.5 mm. The flange-side recessed portions 96 are formed to be, for example, cylindrical. There is no specific limitation on the shape of the flange-side recessed portions 96. As illustrated in FIG. 7, as seen in the axial direction of the output shaft 15, the flange-side recessed portions 96 at least partially overlap the pressure-side fitting teeth 77. The flange-side recessed portions 96 include first flange-side recessed portions 96A, second flange-side recessed portions 96B, and third flange-side recessed portions 96C. The first flange-side recessed portions 96A are located radially outward of the pressure-side cam holes 73H. In this embodiment, the pressure plate 70 includes three first flange-side recessed portions 96A. The first flange-side recessed portions 96A are located at an equal interval in the circumferential direction S. The second flange-side recessed portions 96B are located radially outward of the spring housing portions 84. In this embodiment, two second flange-side recessed portions 96B are provided for one spring housing portion 84. One of such two second flange-side recessed portions 96B is provided radially outward of an end 84HA, on one side in the circumferential direction S, of the spring housing portion 84, and the other of such two second flange-side recessed portions 96B is provided radially outward of an end 84HB, on the other side in the circumferential direction S, of the spring housing portion 84. The third flange-side recessed portions 96C are located between the first flange-side recessed portions 96A and the second flange-side recessed portions 96B in the circumferential direction S. The third flange-side recessed portions 96C are located ahead of the pressure-side cam holes 73H in the first circumferential direction S1. The third flange-side recessed portions 96C are located ahead of the spring housing portions 84 in the second circumferential direction S2. As illustrated in FIG. 8, the third flange-side recessed portions 96C are located on extended lines LM extended from rib portions 92 connecting the cylindrical portion 80 and the flange 98 to each other. The extended lines LM pass, for example, a center 80C of the cylindrical portion 80 and body-side recessed portions 97 described below. Herein, the rib portions 92 are portions of the body 72 that are located between the spring housing portions 84 and the pressure-side cam holes 73H in the circumferential direction S, and extend in the radial direction. As seen in a plan view, the rib portions 92 overlap, for example, the pressure-side slipper cam surfaces 90S. The first flange-side recessed portions 96A, the second flange-side recessed portions 96B and the third flange-side recessed portions 96C are located on the same circumference. The flange-side recessed portions 96 are formed by, for example, core pins 140 (see FIG. 13) being pushed against the back surface 98B of the flange 98 as described below. The flange-side recessed portions 96 may be formed by cutting.

[0060] As illustrated in FIG. 6, the pressure plate 70 includes the plurality of body-side recessed portions 97 formed in the back surface 72B of the body 72. The body-side recessed portions 97 are recessed in the first direction D1 from the back surface 72B of the body 72. The body-side recessed portions 97 are recessed from the back surface 72B by, for example, 0.1 mm to 0.5 mm. The body-side recessed portions 97 may be recessed from the back surface 72B by 0 to 0.1 mm. Alternatively, the body-side recessed portions 97 may be recessed from the back surface 72B by a depth deeper than 0.5 mm. As illustrated in FIG. 7, as seen in the axial direction of the output shaft 15, the body-side recessed portions 97 at least partially

overlap the pressure-side cam portions **90**. As seen in the axial direction of the output shaft **15**, the body-side recessed portions **97** at least partially overlap the pressure-side slipper cam surfaces **90**S. The body-side recessed portions **97** are provided between the pressure-side cam holes **73**H and the spring housing portions **84** in the circumferential direction S. The body-side recessed portions **97** are located ahead of the pressure-side cam holes **73**H in the first circumferential direction S**1**. The body-side recessed portions **97** are respectively located closer to the pressure-side slipper cam surfaces **90**S than to the spring housing portions **84**. The body-side recessed portions **97** are located ahead of the spring housing portions **84** in the second circumferential direction S**2**. The plurality of body-side recessed portions **97** are located on the same circumference. The plurality of body-side recessed portions **97** are located at an equal interval in the circumferential direction S. The body-side recessed portions **97** are located radially inward of the flange-side recessed portions **96**.

**[0061]** FIG. **8** is a plan view illustrating a state where the clutch center **40** and the pressure plate **70** are assembled. In the state illustrated in FIG. **8**, the pressure-side assist cam surfaces **90**A and the center-side assist cam surfaces **60**A are not in contact with each other, and the pressure-side slipper cam surfaces **90**S and the center-side slipper cam surfaces **60**S are not in contact with each other. This is a state where the pressure plate **70** is closest to the clutch center **40**. In the state illustrated in FIG. **8** (assembly state), a distance L**1** in the circumferential direction S between each boss **54** and an end **84**HA, on the side of the pressure-side assist cam surface **90**A (i.e., on the side of the first circumferential direction S**1**), of the insertion hole **84**H is shorter than a distance L**2** in the circumferential direction S between the boss **54** and an end **84**HB, on the side of the pressure-side slipper cam surface **90**S (i.e., on the side of the second circumferential direction S**2**), of the insertion hole **84**H.

**[0062]** As illustrated in FIG. **1**, the stopper plate **100** is contactable with the pressure plate **70**. The stopper plate **100** suppresses separation of the pressure plate **70** from the clutch center **40** by a predetermined distance or more in the second direction D**2**. The stopper plate **100** is secured to the bosses **54** of the clutch center **40** with the bolts **28**. The pressure plate **70** is secured by the bolts **28** fastened to the bosses **54** through the stopper plate **100** in a state where the bosses **54** of the clutch center **40** and the pressure springs **25** are located in the spring housing portions **84**. The stopper plate **100** is substantially triangular as seen in a plan view.

**[0063]** When the pressure plate **70** is in contact with the stopper plate **100**, the pressure-side slipper cam surface **90**S and the center-side slipper cam surface **60**S are in contact with each other by 50% or more and 90% or less of the area of the pressure-side slipper cam surface **90**S and 50% or more and 90% or less of the area of the center-side slipper cam surface **60**S. When the pressure plate **70** is in contact with the stopper plate **100**, the pressure springs **25** are separated from side walls of the spring housing portions **84**. That is, the pressure springs **25** are not sandwiched between the bosses **54** and the spring housing portions **84**, and application of excessive stress to the bosses **54** is suppressed.

**[0064]** The clutch device **10** is filled with a predetermined amount of clutch oil. The clutch oil is distributed in the clutch center **40** and the pressure plate **70** through the hollow portion **15**H of the output shaft **15**, and then is supplied to the input-side rotating plates **20** and the output-side rotating plates **22** through the gap between the center-side fitting portion **58** and the pressure-side fitting portion **88** and through the oil flow holes **49**. The clutch oil is distributed from the outside of the clutch center **40** to the inside of the clutch center **40** through the hollow portion **15**H of the output shaft **15** and through the pressure-side cam holes **73**H. The clutch oil suppresses absorption of heat and abrasion of the friction members. The clutch device **10** according to this embodiment is a so-called multiplate wet friction clutch device.

**[0065]** Now, a method for producing the pressure plate **70** according to this embodiment will be described. FIG. **10** is a flowchart illustrating a method for producing the pressure plate **70**. As illustrated in FIG. **10**, the method for producing the pressure plate **70** includes a preparation step S**10**, a mold clamping step S**20**, a filling step S**30**, a mold opening step S**40**, and a detachment step S**50**. In this embodiment, as illustrated in FIG. **11**, the pressure plate **70** is produced by use of a mold **130** including a fixed mold **110** and a movable mold **120**. In FIGS. **11** through **13**, a direction in which the movable mold **120** moves with respect to the fixed mold **110** will be referred to as a mold moving direction P, a direction in which the movable mold **120** approaches the fixed mold **110** will be referred to as a direction P**1**, and a direction in which the movable mold **120** is separated away from the fixed mold **110** will be referred to as a direction P**2**.

**[0066]** First, in the preparation step S**10**, as illustrated in FIG. **11**, the mold **130** including the fixed mold **110** and the movable mold **120** allowed to approach, or to be separated from, the fixed mold **110** is prepared. The fixed mold **110** has a cavity **115** formed therein, which is used to form the body **72**, the pressure-side fitting teeth **77** and the like of the pressure plate **70**. The movable mold **120** has a core **125** formed therein, which is used to form the flange **98** and the like of the pressure plate **70**.

**[0067]** Next, in the mold clamping step S**20**, as illustrated in FIG. **11**, the movable mold **120** is caused to approach the fixed mold **110** to close the mold **130**. That is, the movable mold **120** is moved in the direction P**1**, and thus the fixed mold **110** is closed with the movable mold **120**. As a result, a molding space **135**, in which the pressure plate **70** is to be formed by molding, is demarcated by the cavity **115** and the core **125**.

**[0068]** Next, in the filling step S**30**, the molding space **135** formed by the movable mold **120** and the fixed mold **110** is filled with a metal material. The metal material may be, for example, an aluminum alloy. The metal material is injected, in a melted state, into the molding space **135** through an injection opening (not shown) provided in the fixed mold **110**, and thus fills the molding space **135**.

**[0069]** Next, in the mold opening step S**40**, the metal material is cooled to be solidified to form the pressure plate **70** by molding, and then the movable mold **120** is separated from the fixed mold **110** to open the mold **130**. That is, as illustrated in FIG. **12**, the movable mold **120** is moved in the direction P**2** to be separated away from the fixed mold **110**. In this state, the pressure plate **70** formed by molding is fixed to the movable mold **120**.

**[0070]** Next, in the detachment step S**50**, the pressure plate **70** is detached from the movable mold **120**. This is performed by pressing the core pins **140** to portions, of the back surface **98**B of the flange **98** of the pressure plate **70** fixed to the movable mold **120**, that overlap the pressure-side

fitting teeth **77** as seen in the mold moving direction P (i.e., the axial direction of the output shaft **15**). As illustrated in FIG. **13**, the movable mold **120** has insertion holes **122** formed therein, into which the core pins **140** are insertable. The core pins **140** are moved in the direction P**1** in FIG. **13**, and as a result, the pressure plate **70** is detached from the movable mold **120** while the flange-side recessed portions **96** and the body-side recessed portions **97** described above are formed.

**[0071]** In the detachment step S**50**, for example, the core pins **140** are pushed against portions, of the back surface **98**B of the flange **98** of the pressure plate **70** fixed to the movable mold **120**, that are radially outward of the pressure-side cam holes **73**H. As a result, the first flange-side recessed portions **96**A are formed in the back surface **98**B of the flange **98**. In the detachment step S**50**, for example, the core pins **140** are pushed against portions, of the back surface **98**B of the flange **98** of the pressure plate **70** fixed to the movable mold **120**, that are radially outward of the spring housing portions **84**. More specifically, in the detachment step S**50**, for example, the core pins **140** are pushed against portions, of the back surface **98**B of the flange **98** of the pressure plate **70** fixed to the movable mold **120**, that are radially outward of the ends **84**HA, on one side in the circumferential direction S, of the spring housing portions **84** and are radially outward of the ends **84**HB, on the other side in the circumferential direction S, of the spring housing portions **84**. As a result, the second flange-side recessed portions **96**B are formed in the back surface **98**B of the flange **98**. In the detachment step S**50**, for example, the core pins **140** are pushed against portions, of the back surface **98**B of the flange **98** of the pressure plate **70** fixed to the movable mold **120**, that are between the pressure-side cam holes **73**H and the spring housing portions **84** in the circumferential direction S. As a result, the third flange-side recessed portions **96**C are formed in the back surface **98**B of the flange **98**. In the detachment step S**50**, for example, the core pins **140** are pushed against portions, of the back surface **72**B of the body **72** of the pressure plate **70** fixed to the movable mold **120**, that overlap the pressure-side cam portions **90** as seen in the mold moving direction P. More specifically, in the detachment step S**50**, the core pins **140** are pushed against portions, of the back surface **72**B of the body **72** of the pressure plate **70** fixed to the movable mold **120**, that overlap the pressure-side slipper cam surfaces **90**S as seen in the mold moving direction P. As a result, the body-side recessed portions **97** are formed in the back surface **72**B of the body **72**.

**[0072]** An operation of the clutch device **10** according to this embodiment will now be described. As described above, the clutch device **10** is located between the engine and the transmission of the motorcycle, and allows or blocks transfer of a rotation driving force of the engine to the transmission by an operation by a driver on a clutch operation lever.

**[0073]** In the case where the driver of the motorcycle does not operate the clutch operation lever, the clutch device **10** operates as follows. A clutch release mechanism (not shown) does not press the push rod **16**A, and thus, the pressure plate **70** presses the input-side rotating plates **20** with a biasing force (elastic force) of the pressure springs **25**. Accordingly, the clutch center **40** enters a clutch-ON state, in which the input-side rotating plates **20** and the output-side rotating plates **22** are pushed against each other to be friction-coupled, and the clutch center **40** is rotationally driven. That is, a rotation driving force of the engine is transferred to the clutch center **40**, and the output shaft **15** is rotationally driven.

**[0074]** In the clutch-ON state, clutch oil flowing in the hollow portion **15**H of the output shaft **15** and then flowing out of the distal end **15**T of the output shaft **15** is dropped or spattered into the cylindrical portion **80** and attached to the cylindrical portion **80** (see arrow F in FIG. **1**). The clutch oil attached to the inside of the cylindrical portion **80** is guided into the clutch center **40**. Accordingly, the clutch oil flows to the outside of the clutch center **40** through the oil flow holes **49**. The clutch oil also flows to the outside of the clutch center **40** through the gap between the center-side fitting portion **58** and the pressure-side fitting portion **88**. Then, the clutch oil flowing to the outside of the clutch center **40** is supplied to the input-side rotating plates **20** and the output-side rotating plates **22**.

**[0075]** By contrast, when the driver of the motorcycle operates the clutch operation lever in the clutch-ON state, the clutch device **10** operates as follows. The clutch release mechanism (not shown) presses the push rod **16**A, and thus, the pressure plate **70** is displaced in a direction away from the clutch center **40** (in the second direction D**2**) against a biasing force of the pressure springs **25**. Accordingly, the clutch center **40** enters a clutch-OFF state, in which the friction coupling between the input-side rotating plates **20** and the output-side rotating plates **22** is canceled, and thus, rotational driving attenuates or stops. That is, the rotation driving force of the engine is blocked and is not transferred to the clutch center **40**.

**[0076]** In the clutch-OFF state, clutch oil flowing in the hollow portion **15**H of the output shaft **15** and then flowing out of the distal end **15**T of the output shaft **15** is guided into the clutch center **40** in the same manner as in the clutch-ON state. At this point, the pressure plate **70** is separated from the clutch center **40**, and thus, the amount of fitting between the center-side fitting portion **58** and the pressure-side fitting portion **88** decreases. As a result, the clutch oil in the cylindrical portion **80** more actively flows to the outside of the clutch center **40**, and is distributed to various portions in the clutch device **10**. In particular, the clutch oil can be actively guided to gaps between the input-side rotating plates **20** and the output-side rotating plates **22** separated from each other.

**[0077]** Then, when the driver releases the clutch operation lever in the clutch-OFF state, the pressure plate **70** is released from the state of being pressed by the clutch release mechanism (not shown) through the push member **16**B, and thus, the pressure plate **70** is displaced in a direction toward the clutch center **40** (in the first direction D**1**) by a biasing force of the pressure springs **25**.

**[0078]** As described above, in the clutch device **10** according to this embodiment, the pressure plate **70** includes the flange-side recessed portions **96** recessed in the first direction D**1** from a second direction D**2**-side surface of the flange **98** (in this embodiment, the back surface **98**B). As can be seen, the pressure plate **70** includes the flange-side recessed portions **96** formed therein. This makes the pressure plate **70** lightweight. In addition, as seen in the axial direction of the output shaft **15**, the flange-side recessed portions **96** at least partially overlap the pressure-side fitting teeth **77**. As described above, the pressure-side fitting teeth **77** are formed on a first direction D**1**-side surface (in this embodiment, the front surface **98**A) of the flange **98**. Por-

tions, of the second direction D2-side surface of the flange **98**, that correspond to such portions of the front surface **98**A are relatively rigid. Therefore, the flange-side recessed portions **96** are formed in the portions, of the back surface **98**B, that overlap the pressure-side fitting teeth **77**, so that the pressure plate **70** is made rigid with certainty and also lightweight.

**[0079]** In the clutch device **10** according to this embodiment, the flange-side recessed portions **96** include the first flange-side recessed portions **96**A, which are located radially outward of the pressure-side cam holes **73**H. According to the above-described embodiment, a stress applied to the portions radially outward of the pressure-side cam holes **73**H is relatively small. Therefore, the first flange-side recessed portions **96**A are provided in such portions, so that the pressure plate **70** is allowed to provide a certain level of performance and also to be lightweight.

**[0080]** In the clutch device **10** according to this embodiment, the flange-side recessed portions **96** include the second flange-side recessed portions **96**B, which are located radially outward of the spring housing portions **84**. According to the above-described embodiment, a stress applied to the portions radially outward of the spring housing portions **84** is relatively small. Therefore, the second flange-side recessed portions **96**B are provided in such portions, so that the pressure plate **70** is allowed to provide a certain level of performance and also to be lightweight.

**[0081]** In the clutch device **10** according to this embodiment, the second flange-side recessed portions **96**B are located radially outward of the ends **84**HA, on one side in the circumferential direction S, of the spring housing portions **84**, and radially outward of the ends **84**HB, on the other side in the circumferential direction S, of the spring housing portions **84**. According to the above-described embodiment, the pressure plate **70** is made more lightweight.

**[0082]** In the clutch device **10** according to this embodiment, the pressure plate **70** includes the plurality of pressure-side cam portions **90** provided in the body **72** and the body-side recessed portions **97** recessed in the first direction D**1** from the second direction D**2**-side surface (in this embodiment, the back surface **98**B) of the body **72**. The plurality of pressure-side cam portions **90** each include at least one of the pressure-side assist cam surface **90**A and the pressure-side slipper cam surface **90**S. The pressure-side assist cam surface **90**A generates a force from the pressure plate **70** toward the clutch center **40**, in order to increase a pressing force between the input-side rotating plates **20** and the output-side rotating plates **22**, when the pressure plate **70** rotates with respect to the clutch center **40**. The pressure-side slipper cam surface **90**S separates the pressure plate **70** from the clutch center **40**, in order to decrease the pressing force between the input-side rotating plates **20** and the output-side rotating plates **22**, when the pressure plate **70** rotates with respect to the clutch center **40**. As seen in the axial direction of the output shaft **15**, the body-side recessed portions **97** at least partially overlap the pressure-side cam portions **90**. As can be seen, the pressure plate **70** includes the body-side recessed portions **97**, and therefore, is lightweight. In addition, as seen in the axial direction of the output shaft **15**, the body-side recessed portions **97** at least partially overlap the pressure-side cam portions **90**. The portions, of the body **72**, where the pressure-side cam portions **90** are formed are relatively rigid. Therefore, the body-side recessed portions **97** are formed in the portions, of the body **72**, that overlap the pressure-side cam portions **90**, so that the pressure plate **70** is made rigid with certainty and also lightweight.

**[0083]** In the clutch device **10** according to this embodiment, the pressure-side cam portions **90** each include the pressure-side slipper cam surface **90**S. As seen in the axial direction of the output shaft **15**, the body-side recessed portions **97** at least partially overlap the pressure-side slipper cam surfaces **90**S. According to the above-described embodiment, portions, of the pressure-side cam portions **90**, where the pressure-side slipper cam surfaces **90**S are formed are relatively rigid. Therefore, the body-side recessed portions **97** are provided in the portions, of the body **72**, that overlap the pressure-side slipper cam surfaces **90**S, so that the pressure plate **70** is made rigid with certainty and also lightweight.

**[0084]** In the clutch device **10** according to this embodiment, the pressure plate **70** includes the cylindrical portion **80** provided in the body **72** and housing the output shaft **15**. The flange-side recessed portions **96** are located on the extended lines LM extended from the ribs **92** connecting the cylindrical portion **80** and the flange **98** to each other. According to the above-described embodiment, the portions, of the flange **98**, that are on the extended lines LM extended from the ribs **92** connecting the cylindrical portion **80** and the flange **98** to each other are relatively rigid. Therefore, the flange-side recessed portions **96** are provided on the extended lines extended from the ribs **92** connecting the cylindrical portion **80** and the flange **98** to each other (i.e., on the straight lines LM), so that the pressure plate **70** is made rigid with certainty and also lightweight.

**[0085]** With the method for producing the pressure plate **70** according to this embodiment, in the detachment step S**50**, the core pins **140** are pushed against the portions, of the back surface **98**B of the flange **98** of the pressure plate **70** fixed to the movable mold **120**, that overlap the pressure-side fitting teeth **77** as seen in the mold moving direction P. As described above, the pressure-side fitting teeth **77** are formed on the front surface **98**A of the flange **98**. Portions, of the back surface **98**B of the flange **98**, that correspond to such portions of the front surface **98**A are relatively rigid. Therefore, the core pins **140** are pushed against the portions, of the back surface **98**B, that overlap the pressure-side fitting teeth **77** as seen in the mold moving direction P, so that the pressure plate **70** is suppressed from being deformed while the flange-side recessed portions **96** are provided in the back surface **98**B, and thus the pressure-plate **70** is detached from the movable mold **120**.

**[0086]** With the production method according to this embodiment, in the detachment step S**50**, the core pins **140** are pushed against the portions, of the back surface **98**B of the flange **98** of the pressure plate **70** fixed to the movable mold **120**, that are located radially outward of the pressure-side cam holes **73**H. According to the above-described embodiment, the core pins **140** are pushed against the portions, of the back surface **98**B of the flange **98**, that are located radially outward of the pressure-side cam holes **73**H, so that the portions, of the pressure plate **70**, that are in the vicinity of the pressure-side cam holes **73**H are suppressed from being deformed while the flange-side recessed portions **96** are provided in such portions, and thus the pressure-plate **70** is detached from the movable mold **120**.

**[0087]** With the production method according to this embodiment, in the detachment step S**50**, the core pins **140**

are pushed against the portions, of the back surface **98**B of the flange **98** of the pressure plate **70** fixed to the movable mold **120**, that are located radially outward of the spring housing portions **84**. According to the above-described embodiment, the core pins **140** are pushed against the portions, of the back surface **98**B of the flange **98**, that are located radially outward of the spring housing portions **84**, so that the portions, of the pressure plate **70**, that are in the vicinity of the spring housing portions **84** are suppressed from being deformed while the flange-side recessed portions **96** are provided in such portions, and thus the pressure-plate **70** is detached from the movable mold **120**.

**[0088]** With the production method according to this embodiment, in the detachment step S**50**, the core pins **140** are pushed against the portions, of the back surface **98**B of the flange **98** of the pressure plate **70** fixed to the movable mold **120**, that are located radially outward of the ends **84**HA, on one side in the circumferential direction S, of the spring housing portions **84** and are radially outward of the ends **84**HB, on the other side in the circumferential direction S, of the spring housing portions **84**. According to the above-described embodiment, the portions, of the pressure plate **70**, that are in the vicinity of the spring housing portions **84** are further suppressed from being deformed.

**[0089]** With the production method according to this embodiment, in the detachment step S**50**, the core pins **140** are pushed against the portions, of the back surface **72**B of the body **72** of the pressure plate **70** fixed to the movable mold **120**, that overlap the pressure-side cam portions **90** as seen in the mold moving direction P. The portions, of the back surface **72**B of the body **72**, that overlap the pressure-side cam portions **90** as seen in the mold moving direction P are relatively rigid. Therefore, the core pins **140** are pushed against the portions, of the back surface **72**B, that overlap the pressure-side cam portions **90** as seen in the mold moving direction P, so that the pressure plate **70** is suppressed from being deformed while the body-side recessed portions **97** are provided in the back surface **72**B of the body **72**, and thus the pressure-plate **70** is detached from the movable mold **120**.

**[0090]** With the production method according to this embodiment, in the detachment step S**50**, the core pins **140** are pushed against the portions, of the back surface **72**B of the body **72** of the pressure plate **70** fixed to the movable mold **120**, that overlap the pressure-side slipper cam surfaces **90**S as seen in the mold moving direction P. According to the above-described embodiment, the portions, of the back surface **72**B of the body **72**, where the pressure-side slipper cam surfaces **90**S are formed are relatively rigid. Therefore, the core pins **140** are pushed against the portions, of the back surface **72**B, that overlap the pressure-side slipper cam surfaces **90**S as seen in the mold moving direction P, so that that the pressure plate **70** is suppressed from being deformed while the body-side recessed portions **97** are provided in the back surface **72**B of the body **72**, and thus the pressure-plate **70** is detached from the movable mold **120**.

**[0091]** With the production method according to this embodiment, the pressure plate **70** includes the cylindrical portion **80** provided in the body **72** and housing the output shaft **15**. The portions, of the back surface **98**B of the flange **98**, that overlap the pressure-side fitting teeth **77** as seen in the mold moving direction P are located on the extended lines LM extended from the ribs **92** connecting the cylindrical portion **80** and the flange **98** to each other. According to the above-described embodiment, the portions, of the flange **98**, that are on the extended lines extended from the ribs **92** connecting the cylindrical portion **80** and the flange **98** to each other are relatively rigid. Therefore, the core pins **140** are pushed against the portions, of the flange **98**, that are on the extended lines extended from the ribs **92** connecting the cylindrical portion **80** and the flange **98** to each other (i.e., on the straight lines LM), so that the pressure plate **70** is suppressed from being deformed while the flange-side recessed portions **96** are provided in the back surface **98**B of the flange **98**, and thus the pressure-plate **70** is detached from the movable mold **120**.

**[0092]** Some preferred embodiments of the present invention have been described. The above-described embodiments are merely examples, and the present invention may be carried out in any of various other forms.

**[0093]** In the above-described embodiments, the center-side cam portions **60** each include the center-side assist cam surface **60**A and the center-side slipper cam surface **60**S. It is sufficient that the center-side cam portions **60** each include at least one of the center-side assist cam surface **60**A and the center-side slipper cam surface **60**S.

**[0094]** In the above-described embodiments, the pressure-side cam portions **90** each include the pressure-side assist cam surface **90**A and the pressure-side slipper cam surface **90**S. It is sufficient that the pressure-side cam portions **90** each include at least one of the pressure-side assist cam surface **90**A and the pressure-side slipper cam surface **90**S.

**[0095]** In the above-described embodiments, the body-side recessed portions **97** are located at such positions as to at least partially overlap the pressure-side slipper cam surfaces **90**S as seen in the axial direction of the output shaft **15**. The body-side recessed portions **97** are not limited to this. For example, the body-side recessed portions **97** may be located at such positions as to at least partially overlap the pressure-side assist cam surfaces **90**A as seen in the axial direction of the output shaft **15**.

**[0096]** In the above-described embodiments, the flange-side recessed portions **96** include the first flange-side recessed portions **96**A and the third flange-side recessed portions **96**C. The flange-side recessed portions **96** may include one of the first flange-side recessed portions **96**A and the third flange-side recessed portions **96**C. For example, the flange-side recessed portions **96** may include the first flange-side recessed portions **96**A and the second flange-side recessed portions **96**B, or may include the second flange-side recessed portions **96**B and the third flange-side recessed portions **96**C.

REFERENCE SIGNS LIST

**[0097]** **10** clutch device
**[0098]** **15** output shaft
**[0099]** **20** input-side rotating plate
**[0100]** **22** output-side rotating plate
**[0101]** **30** clutch housing
**[0102]** **40** clutch center
**[0103]** **70** pressure plate
**[0104]** **72** body
**[0105]** **72**B back surface
**[0106]** **77** pressure-side fitting tooth
**[0107]** **90** pressure-side cam portion
**[0108]** **90**A pressure-side assist cam surface
**[0109]** **90**S pressure-side assist slipper surface

**[0110]** **96** flange-side recessed portion
**[0111]** **96**A first flange-side recessed portion
**[0112]** **96**B second flange-side recessed portion
**[0113]** **96**C third flange-side recessed portion
**[0114]** **97** body-side recessed portion
**[0115]** **98** flange
**[0116]** **98**A front surface (surface on the side of the first direction)
**[0117]** **98**B back surface (surface on the side of the second direction)
**[0118]** **110** fixed mold
**[0119]** **120** movable mold
**[0120]** **130** mold
**[0121]** **135** molding space
**[0122]** **140** core pin claims

**1**. A clutch device allowing or blocking transfer of a rotation driving force of an input shaft to an output shaft, the clutch device comprising:

a clutch center housed in a clutch housing holding a plurality of input-side rotating plates rotationally drivable by rotational driving of the input shaft, the clutch center being rotationally drivable together with the output shaft; and

a pressure plate movable toward or away from the clutch center and rotatable with respect to the clutch center, the pressure plate being capable of pressing the input-side rotating plates and a plurality of output-side rotating plates alternately arranged with the input-side rotating plates,

wherein:

the pressure plate includes:

a body,

a flange extending radially outward from an outer circumferential edge of the body,

a plurality of pressure-side fitting teeth formed to project in a first direction from a first direction-side surface of the flange, holding the plurality of output-side rotating plates, and being arranged in a circumferential direction, where the first direction is a direction in which the pressure plate moves toward the clutch center, and a second direction is a direction in which the pressure plate moves away from the clutch center,

a plurality of pressure-side cam portions provided in the body and each including a pressure-side assist cam surface and a pressure-side slipper cam surface, the pressure-side assist cam surface generating a force in a direction from the pressure plate toward the clutch center, in order to increase a pressing force between the input-side rotating plates and the output-side rotating plates, when the pressure plate rotates with respect to the clutch center, and the pressure-side slipper cam surface separating the pressure plate from the clutch center, in order to decrease the pressing force between the input-side rotating plates and the output-side rotating plates, when the pressure plate rotates with respect to the clutch center, and

a body-side recessed portion recessed in the first direction from a second direction-side surface of the body, and

as seen in an axial direction of the output shaft, the body-side recessed portion at least partially overlaps one of the pressure-side slipper cam surfaces.

**2**. A clutch device allowing or blocking transfer of a rotation driving force of an input shaft to an output shaft, the clutch device comprising:

a clutch center housed in a clutch housing holding a plurality of input-side rotating plates rotationally drivable by rotational driving of the input shaft, the clutch center being rotationally drivable together with the output shaft; and

a pressure plate movable toward or away from the clutch center and rotatable with respect to the clutch center, the pressure plate being capable of pressing the input-side rotating plates and a plurality of output-side rotating plates alternately arranged with the input-side rotating plates,

wherein:

the pressure plate includes:

a body,

a flange extending radially outward from an outer circumferential edge of the body,

a plurality of pressure-side fitting teeth formed to project in a first direction from a first direction-side surface of the flange, holding the plurality of output-side rotating plates, and being arranged in a circumferential direction, where the first direction is a direction in which the pressure plate moves toward the clutch center, and a second direction is a direction in which the pressure plate moves away from the clutch center,

a plurality of pressure-side cam portions provided in the body and each including at least one of a pressure-side assist cam surface and a pressure-side slipper cam surface, the pressure-side assist cam surface generating a force in a direction from the pressure plate toward the clutch center, in order to increase a pressing force between the input-side rotating plates and the output-side rotating plates, when the pressure plate rotates with respect to the clutch center, and the pressure-side slipper cam surface separating the pressure plate from the clutch center, in order to decrease the pressing force between the input-side rotating plates and the output-side rotating plates, when the pressure plate rotates with respect to the clutch center, and

a body-side recessed portion recessed in the first direction from a second direction-side surface of the body,

as seen in an axial direction of the output shaft, the body-side recessed portion at least partially overlaps one of the pressure-side cam portions, and

the body-side recessed portion has the same shape as that of a portion of a core pin used to detach the pressure plate from a mold, the portion being pushed for the detachment.

**3**. A clutch device allowing or blocking transfer of a rotation driving force of an input shaft to an output shaft, the clutch device comprising:

a clutch center housed in a clutch housing holding a plurality of input-side rotating plates rotationally drivable by rotational driving of the input shaft, the clutch center being rotationally drivable together with the output shaft; and

a pressure plate movable toward or away from the clutch center and rotatable with respect to the clutch center, the pressure plate being capable of pressing the input-

side rotating plates and a plurality of output-side rotating plates alternately arranged with the input-side rotating plates,

wherein:

the pressure plate includes:

a body,

a flange extending radially outward from an outer circumferential edge of the body,

a plurality of pressure-side fitting teeth formed to project in a first direction from a first direction-side surface of the flange, holding the plurality of output-side rotating plates, and being arranged in a circumferential direction, where the first direction is a direction in which the pressure plate moves toward the clutch center, and a second direction is a direction in which the pressure plate moves away from the clutch center,

a cylindrical portion provided in the body and housing the output shaft,

a body-side recessed portion recessed in the first direction from a second direction-side surface of the body, and

a rib connecting the cylindrical portion and the flange to each other,

the body-side recessed portion is located in the rib, and

the body-side recessed portion has the same shape as that of a portion of a core pin used to detach the pressure plate from a mold, the portion being pushed for the detachment.

**4**. A clutch device allowing or blocking transfer of a rotation driving force of an input shaft to an output shaft, the clutch device comprising:

a clutch center housed in a clutch housing holding a plurality of input-side rotating plates rotationally drivable by rotational driving of the input shaft, the clutch center being rotationally drivable together with the output shaft; and

a pressure plate movable toward or away from the clutch center and rotatable with respect to the clutch center, the pressure plate being capable of pressing the input-side rotating plates and a plurality of output-side rotating plates alternately arranged with the input-side rotating plates,

wherein:

the pressure plate includes:

a body,

a flange extending radially outward from an outer circumferential edge of the body,

a plurality of pressure-side fitting teeth formed to project in a first direction from a first direction-side surface of the flange, holding the plurality of output-side rotating plates, and being arranged in a circumferential direction, where the first direction is a direction in which the pressure plate moves toward the clutch center, and a second direction is a direction in which the pressure plate moves away from the clutch center,

a plurality of pressure-side cam portions provided in the body and each including at least one of a pressure-side assist cam surface and a pressure-side slipper cam surface, the pressure-side assist cam surface generating a force in a direction from the pressure plate toward the clutch center, in order to increase a pressing force between the input-side rotating plates and the output-side rotating plates, when the pressure plate rotates with respect to the clutch center, and the pressure-side slipper cam surface separating the pressure plate from the clutch center, in order to decrease the pressing force between the input-side rotating plates and the output-side rotating plates, when the pressure plate rotates with respect to the clutch center, and

a body-side recessed portion recessed in the first direction from a second direction-side surface of the body, and

the body-side recessed portion has the same shape as that of a portion of a core pin used to detach the pressure plate from a mold, the portion being pushed for the detachment.

**5**. A clutch device allowing or blocking transfer of a rotation driving force of an input shaft to an output shaft, the clutch device comprising:

a clutch center housed in a clutch housing holding a plurality of input-side rotating plates rotationally drivable by rotational driving of the input shaft, the clutch center being rotationally drivable together with the output shaft; and

a pressure plate movable toward or away from the clutch center and rotatable with respect to the clutch center, the pressure plate being capable of pressing the input-side rotating plates and a plurality of output-side rotating plates alternately arranged with the input-side rotating plates,

wherein:

the pressure plate includes:

a body,

a flange extending radially outward from an outer circumferential edge of the body,

a plurality of pressure-side fitting teeth formed to project in a first direction from a first direction-side surface of the flange, holding the plurality of output-side rotating plates, and being arranged in a circumferential direction, where the first direction is a direction in which the pressure plate moves toward the clutch center, and a second direction is a direction in which the pressure plate moves away from the clutch center,

a plurality of pressure-side cam portions provided in the body and each including a pressure-side assist cam surface and a pressure-side slipper cam surface, the pressure-side assist cam surface generating a force in a direction from the pressure plate toward the clutch center, in order to increase a pressing force between the input-side rotating plates and the output-side rotating plates, when the pressure plate rotates with respect to the clutch center, and the pressure-side slipper cam surface separating the pressure plate from the clutch center, in order to decrease the pressing force between the input-side rotating plates and the output-side rotating plates, when the pressure plate rotates with respect to the clutch center,

a spring housing portion formed in one of the pressure-side cam portions and opened in a second direction-side surface of the body, the spring housing portion housing a pressure spring biasing the pressure plate in the first direction,

a body-side recessed portion recessed in the first direction from the second direction-side surface of the body, and

a flange-side recessed portion recessed in the first direction from a second direction-side surface of the flange,

the pressure-side assist cam surface is located at an end on one side, in the circumferential direction, of the pressure-side cam portion,

the pressure-side slipper cam surface is located at an end on the other side, in the circumferential direction, of the pressure-side cam portion, and

as seen in an axial direction of the output shaft, the body-side recessed portion is located closer to one of the pressure-side slipper cam surfaces corresponding thereto than to the spring housing portion.

**6**. The clutch device according to claim **5**, wherein the flange-side recessed portion has the same shape as that of a portion of a core pin used to detach the pressure plate from a mold, the portion being pushed for the detachment.

**7**. The clutch device according to claim **5** or **6**, wherein:

the pressure plate further includes a spring housing portion formed in one of the pressure-side cam portions and housing a pressure spring biasing the pressure plate in the first direction, and

the flange-side recessed portion is located radially outward of the spring housing portion.

**8**. A motorcycle, comprising the clutch device according to any one of claims **1** through **6**.

**9**. A method for producing a pressure plate including:

a body,

a flange extending radially outward from an outer circumferential edge of the body,

a plurality of pressure-side fitting teeth formed to project from a front surface of the flange, holding output-side rotating plates, and being arranged in a circumferential direction,

a plurality of pressure-side cam portions provided in the body and each including at least one of a pressure-side assist cam surface and a pressure-side slipper cam surface, the pressure-side assist cam surface generating a force in a direction from the pressure plate toward the clutch center, in order to increase a pressing force between input-side rotating plates and the output-side rotating plates, when the pressure plate rotates with respect to the clutch center, and the pressure-side slipper cam surface separating the pressure plate from the clutch center, in order to decrease the pressing force between the input-side rotating plates and the output-side rotating plates, when the pressure plate rotates with respect to the clutch center, and

a body-side recessed portion formed in a back surface of the body,

the method comprising:

a preparation step of preparing a mold including a fixed mold and a movable mold allowed to approach, or to be separated from, the fixed mold,

a mold clamping step of causing the movable mold to approach the fixed mold to close the mold,

a filling step of filling a molding space formed by the movable mold and the fixed mold with a metal material,

a mold opening step of cooling and solidifying the metal material to form the pressure plate by molding and then separating the movable mold from the fixed mold to open the mold, and

a detachment step of, where a direction in which the movable mold is moved with respect to the fixed mold is a mold moving direction, pushing a core pin against a portion, of the back surface of the body of the pressure plate fixed to the movable mold, that overlaps one of the pressure-side cam portions as seen in the mold moving direction to detach the pressure plate from the movable mold.

**10**. The method according to claim **9**, wherein:

the pressure-side cam portions each include the pressure-side slipper cam surface, and

the detachment step includes a step of pushing the core pin against a portion, of the back surface of the body of the pressure plate fixed to the movable mold, that overlaps the pressure-side slipper cam surface as seen in the mold moving direction.

**11**. A method for producing a pressure plate including:

a body,

a flange extending radially outward from an outer circumferential edge of the body,

a plurality of pressure-side fitting teeth formed to project from a front surface of the flange, holding output-side rotating plates, and being arranged in a circumferential direction,

a cylindrical portion provided in the body and housing an output shaft,

a body-side recessed portion formed in a back surface of the body, and

a rib connecting the cylindrical portion and the flange to each other,

the method comprising:

a preparation step of preparing a mold including a fixed mold and a movable mold allowed to approach, or to be separated from, the fixed mold,

a mold clamping step of causing the movable mold to approach the fixed mold to close the mold,

a filling step of filling a molding space formed by the movable mold and the fixed mold with a metal material,

a mold opening step of cooling and solidifying the metal material to form the pressure plate by molding and then separating the movable mold from the fixed mold to open the mold, and

a detachment step of pushing a core pin against the rib on the back surface of the body of the pressure plate fixed to the movable mold to detach the pressure plate from the movable mold.

* * * * *