US 20250279373A1

(19) United States
(12) Patent Application Publication
Won
(10) Pub. No.: US 2025/0279373 A1
(43) Pub. Date: Sep. 4, 2025

(54) **SEMICONDUCTOR DEVICE AND A METHOD OF MANUFACTURING THE SAME**

(71) Applicant: **Samsung Electronics Co., Ltd.**, Suwon-si (KR)

(72) Inventor: **Donghoon Won**, Suwon-si (KR)

(73) Assignee: **Samsung Electronics Co., Ltd.**, Suwon-si (KR)

(21) Appl. No.: **18/937,620**

(22) Filed: **Nov. 5, 2024**

(30) **Foreign Application Priority Data**

Mar. 4, 2024 (KR) 10-2024-0030712

Publication Classification

(51) **Int. Cl.**

H01L 23/00	(2006.01)
H01L 25/065	(2023.01)
H10B 80/00	(2023.01)

(52) **U.S. Cl.**

CPC ***H01L 23/562*** (2013.01); ***H01L 24/02*** (2013.01); ***H01L 24/08*** (2013.01); ***H01L 24/94*** (2013.01); ***H10B 80/00*** (2023.02); *H01L 25/0657* (2013.01); *H01L 2224/02235* (2013.01); *H01L 2224/08145* (2013.01); *H01L 2224/94* (2013.01); *H01L 2225/06562* (2013.01)

(57) **ABSTRACT**

Some embodiments of the present disclosure relate to a semiconductor device including a first semiconductor chip comprising a first bonding pad and one or more first dummy pads; and a second semiconductor chip, positioned on the first semiconductor chip, comprising a second bonding pad and one or more second dummy patterns; wherein the first bonding pad is in contact with the second bonding pad, the first dummy pattern is in contact with the second dummy pattern, the first dummy pattern is positioned at an edge of the first semiconductor chip configured to be exposed from a side surface of the first semiconductor chip, and the second dummy pattern is positioned at an edge of the second semiconductor chip configured to be exposed to a side surface of the second semiconductor chip.

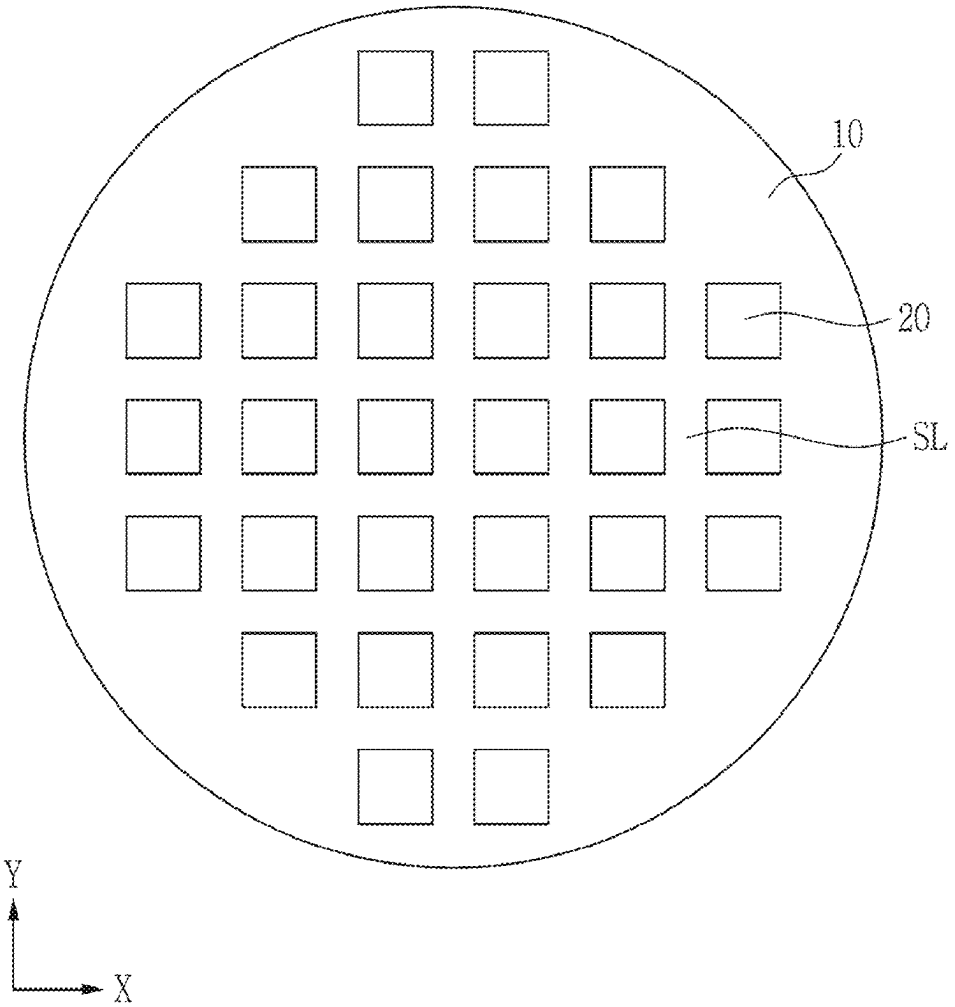

FIG. 1

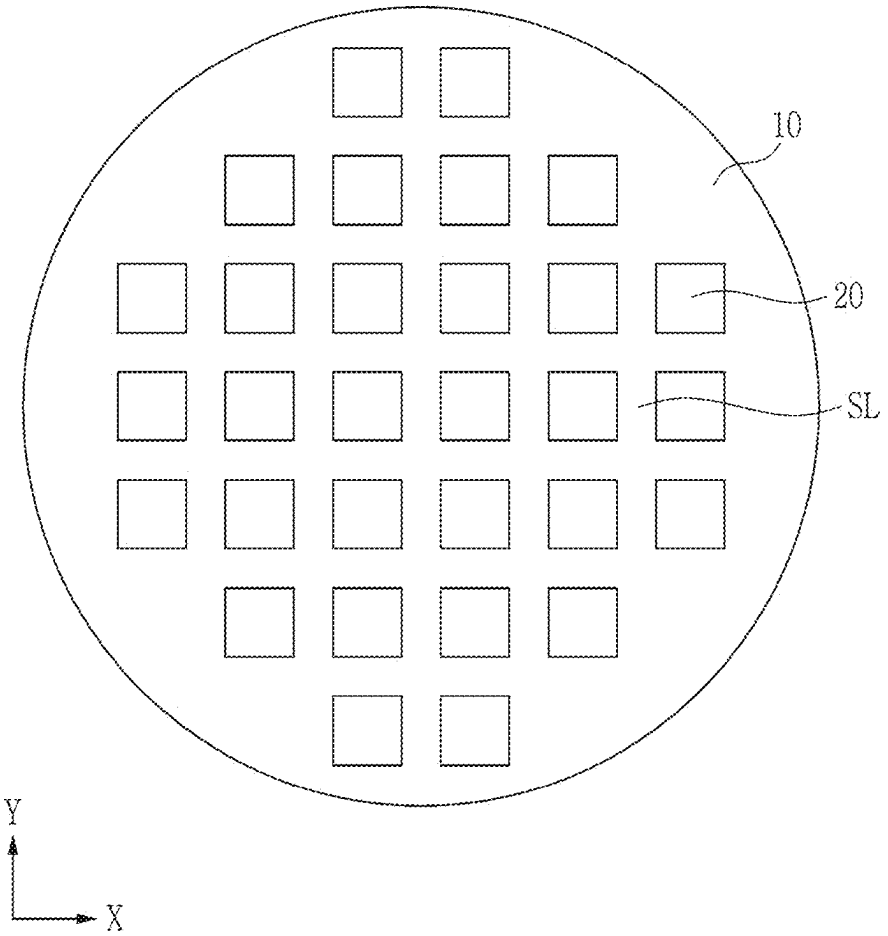

FIG. 2

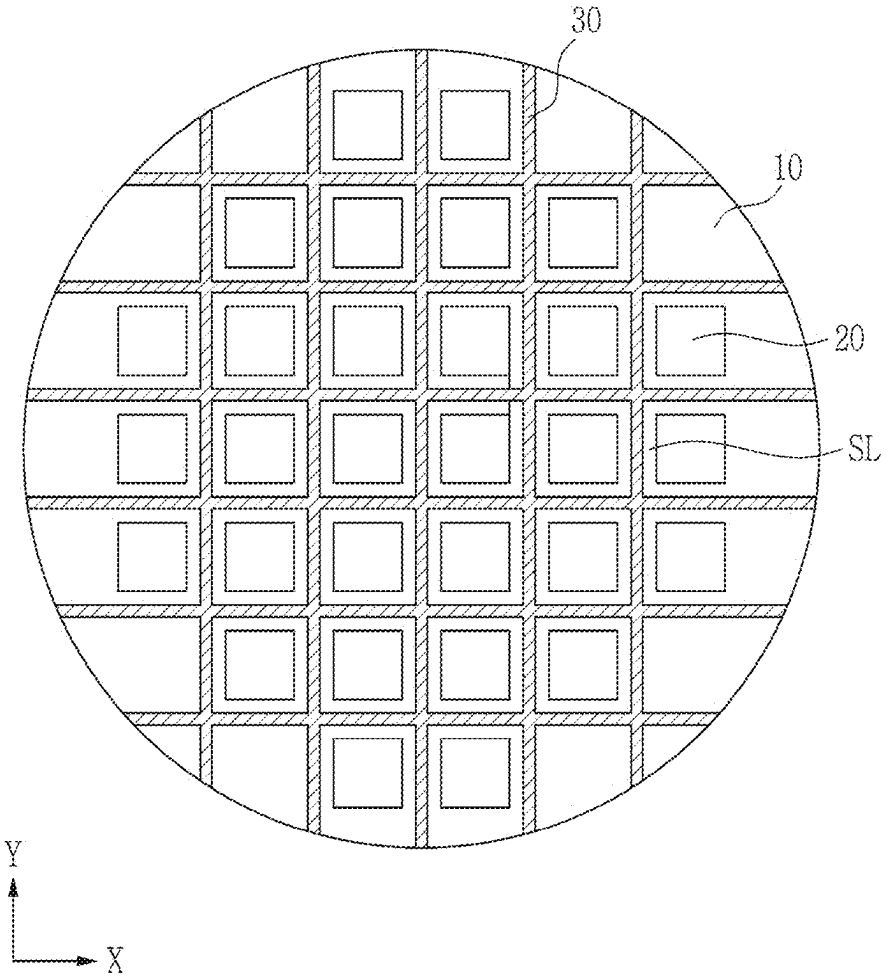

FIG. 3

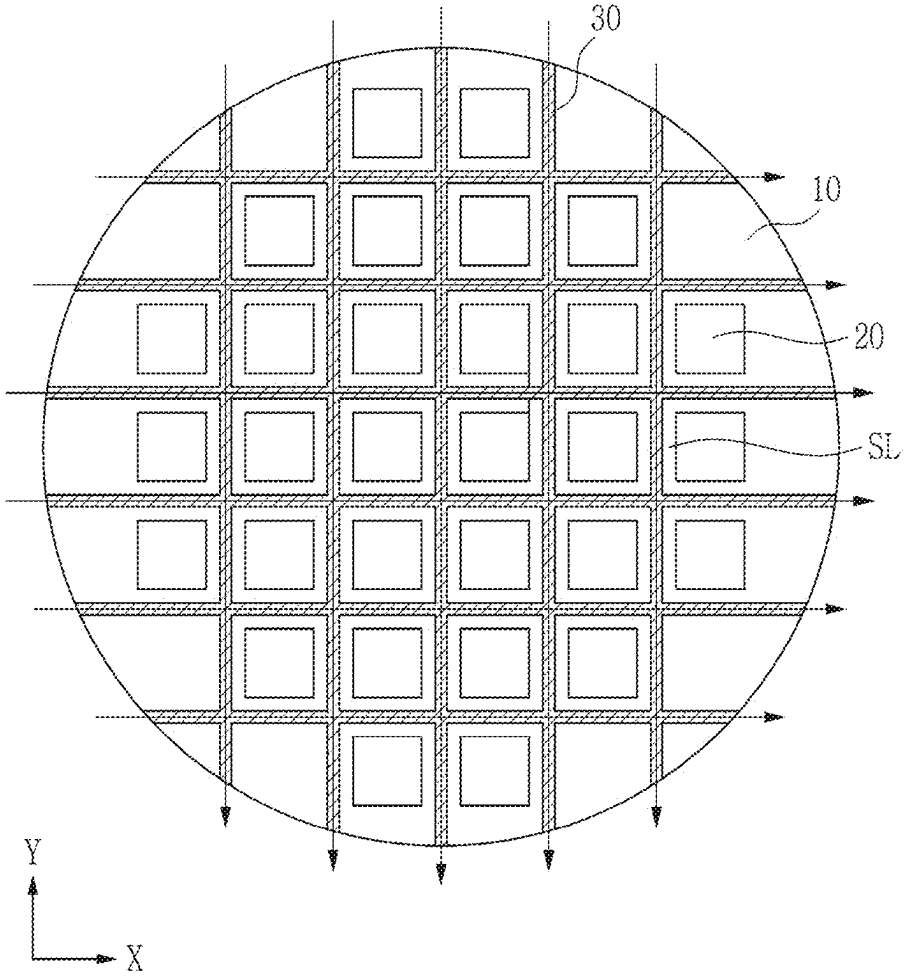

FIG. 4

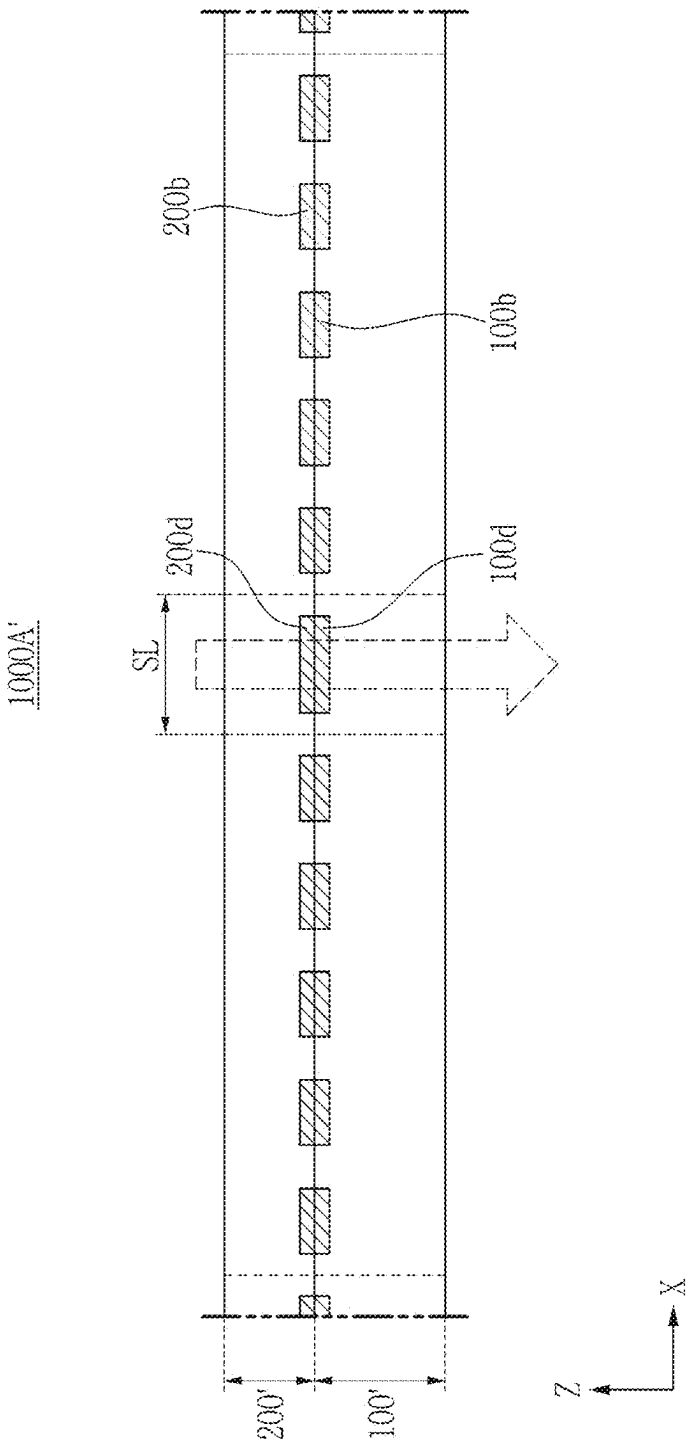

FIG. 5

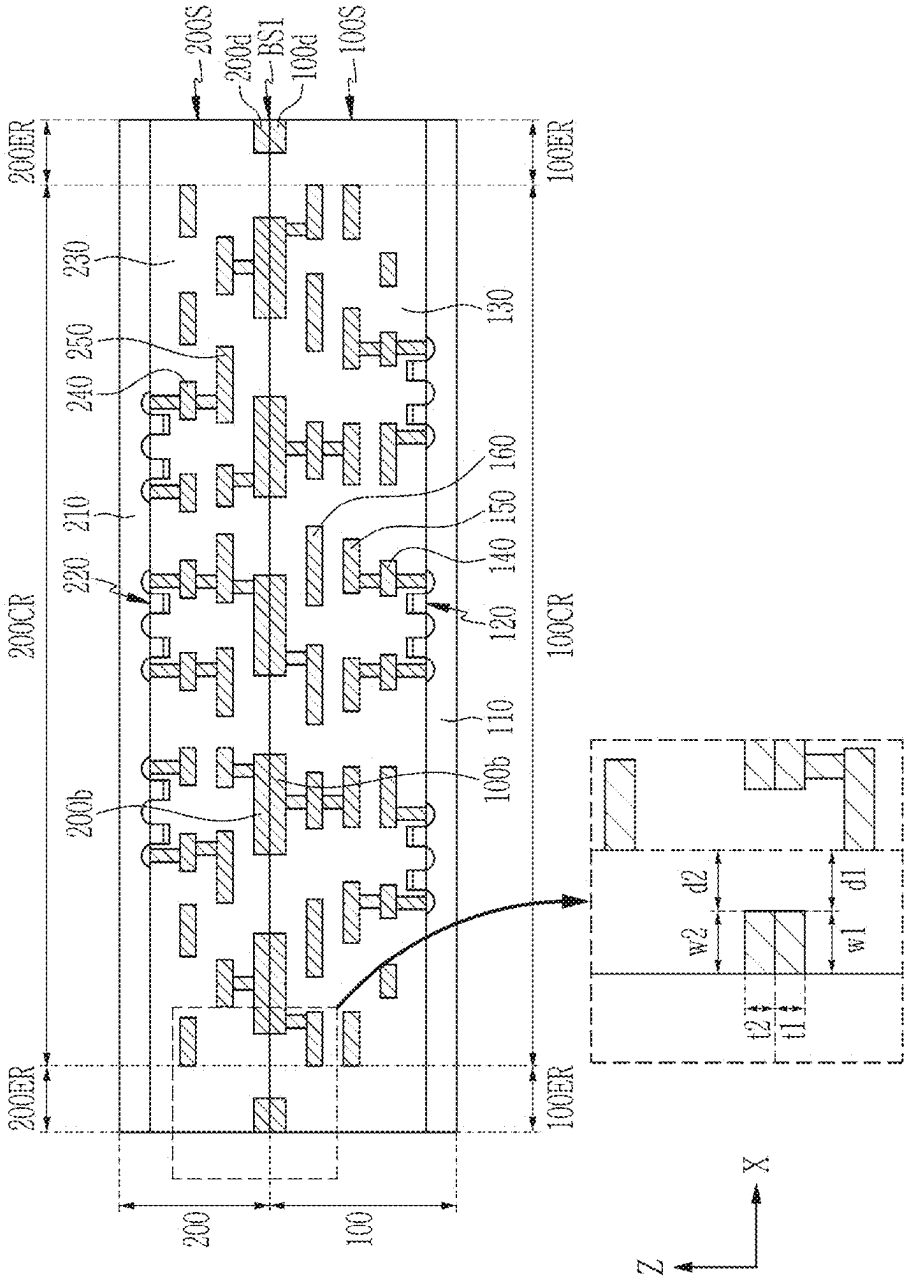
1000A
200S
200d
BS1
100d
100S
200ER
100ER
230
250
240
210
220
200CR
100CR
130
160
150
140
120
110
100b
200b
200
100
d2
d1
w2
w1
t2
t1
X
Z

FIG. 6

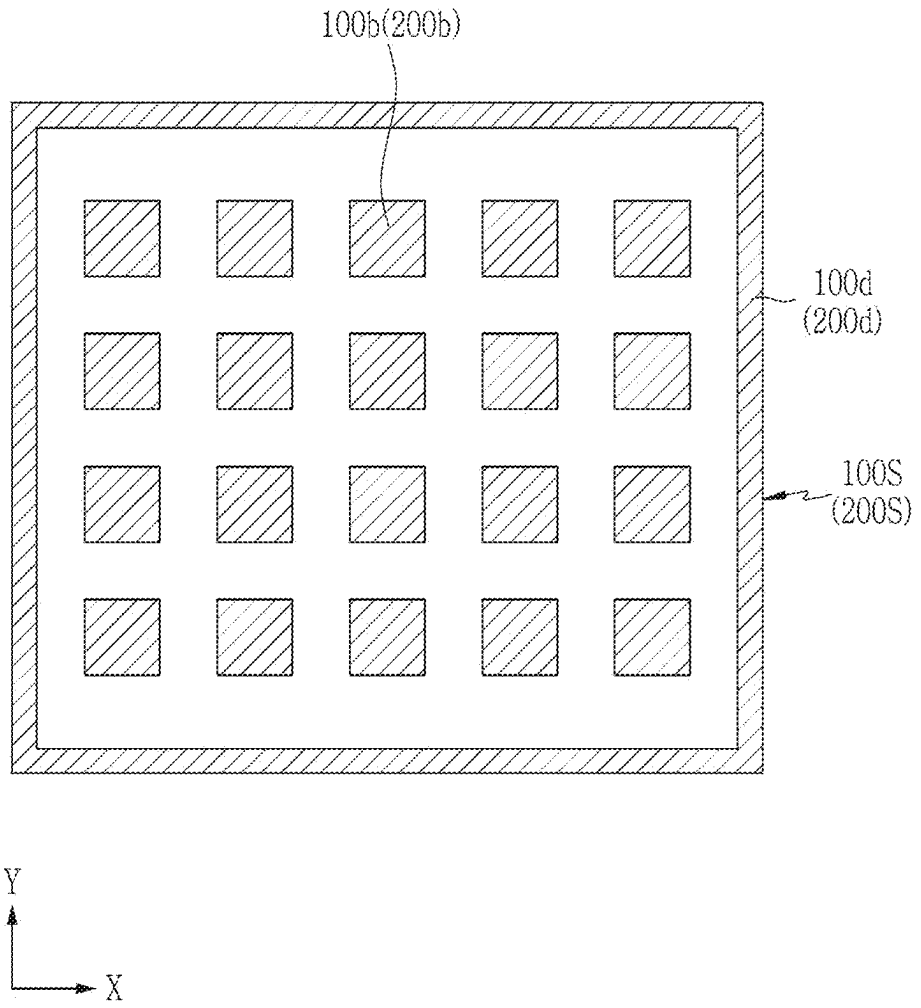

FIG. 7

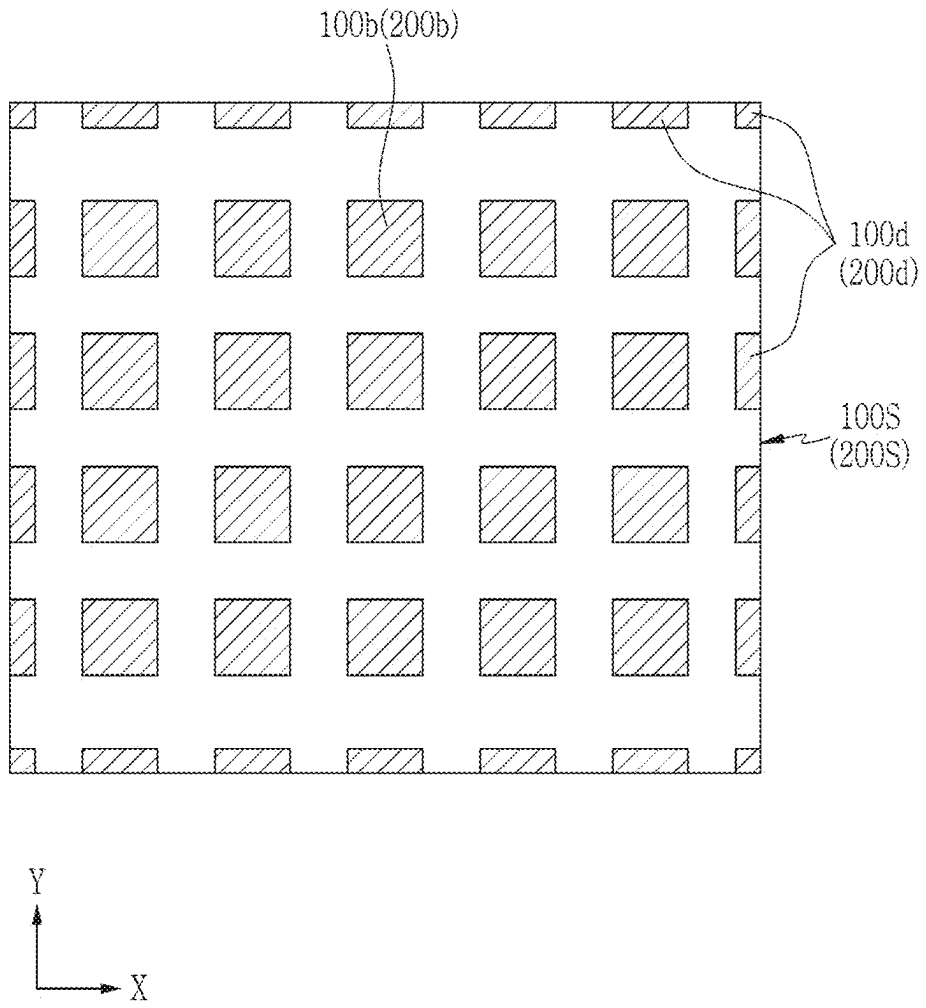

FIG. 8

1000B'

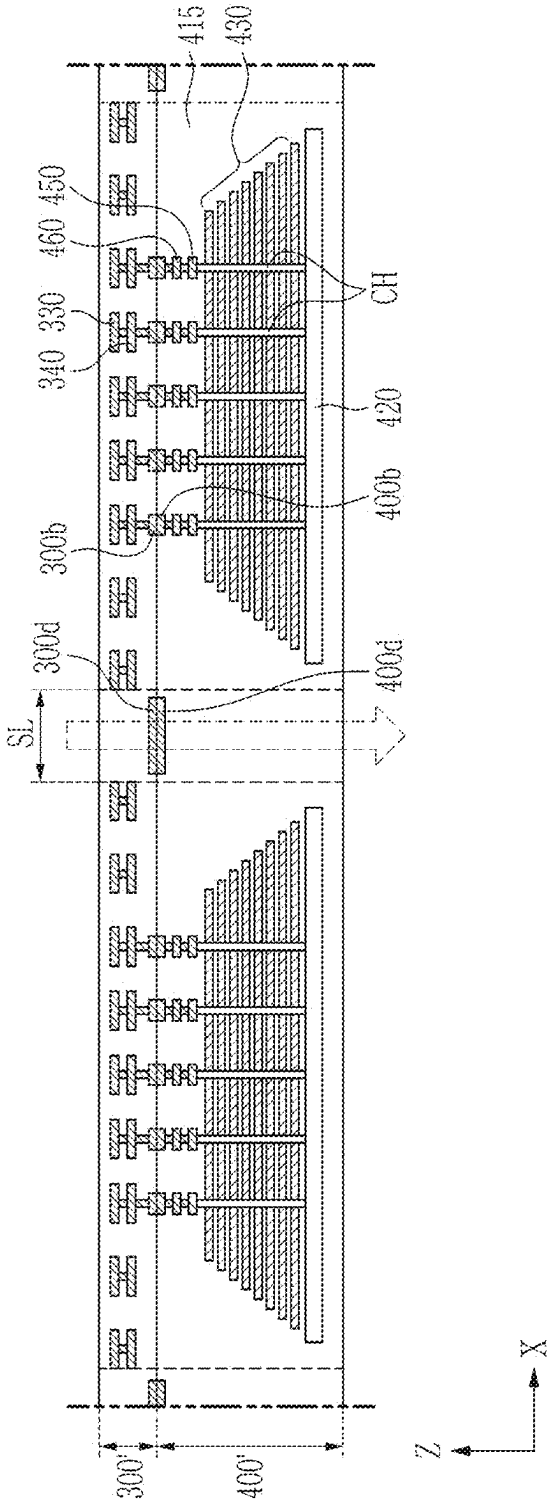

FIG. 9

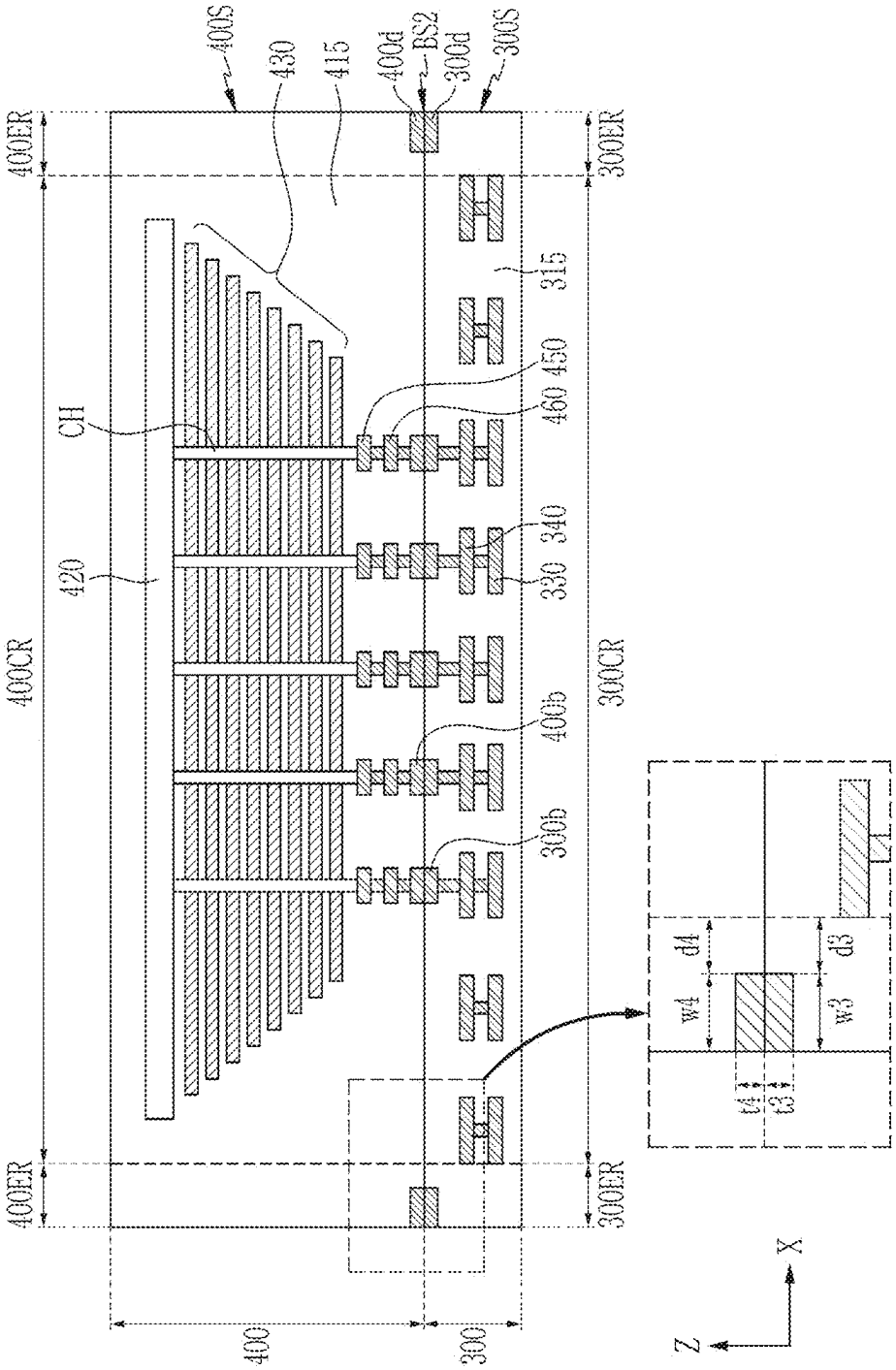
1000B
400S
430
415
400d
BS2
300d
300S
400ER
300ER
315
CH
450
460
420
340
330
400CR
300CR
400b
300b
d4
d3
w4
w3
t4
t3
400
300
X
Z

FIG. 10

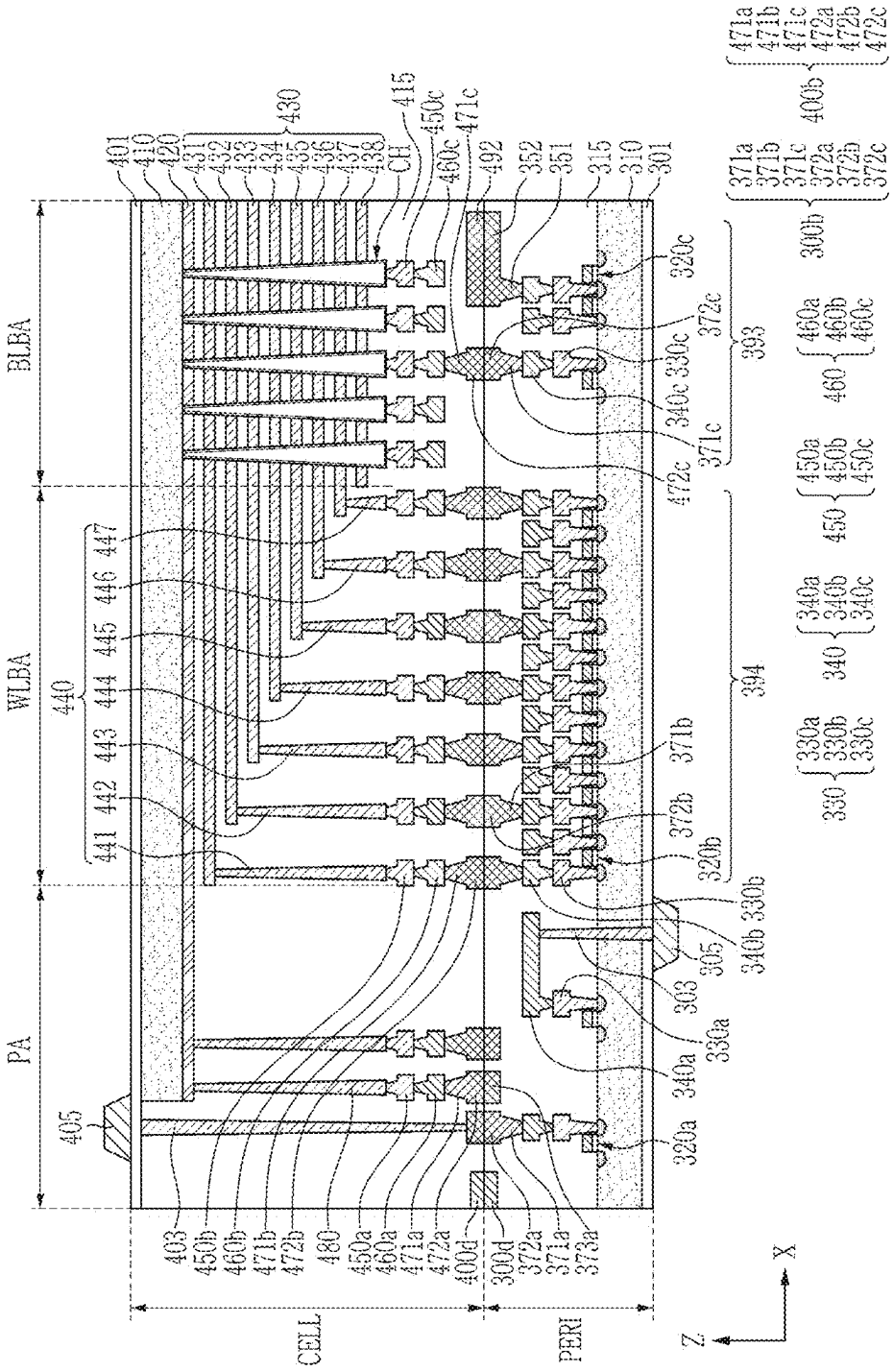
BLBA
WLBA
PA
CELL
PERI
Z
X
401
410
420
430
431
432
433
434
435
436
437
438
CH
415
450c
460c
471c
492
352
351
315
310
301
320c
372c
330c
340c
371c
472c
393
394
447
446
445
444
443
442
441
440
371b
372b
320b
330b
340b
305
303
330a
340a
320a
405
403
450b
460b
471b
472b
480
450a
460a
471a
472a
400d
300d
372a
371a
373a
471a
471b
471c
472a
472b
472c
400b
371a
371b
371c
372a
372b
372c
300b
460a
460b
460c
460
450a
450b
450c
450
340a
340b
340c
340
330a
330b
330c
330

FIG. 11

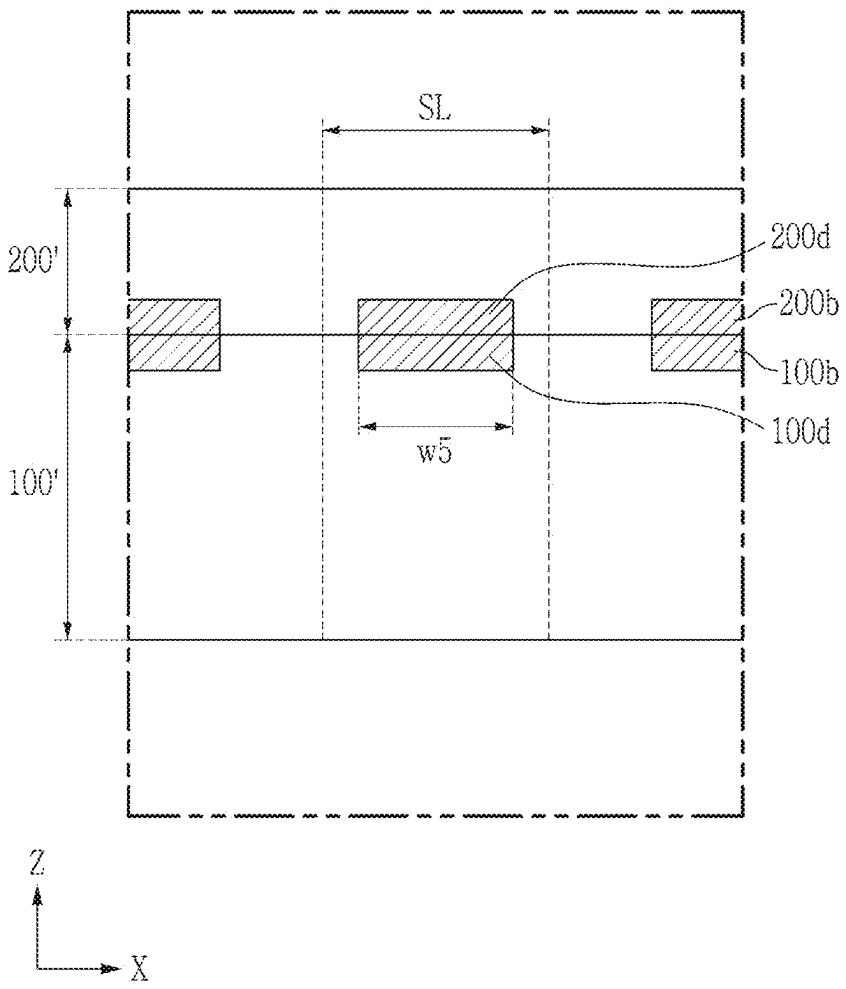

FIG. 12

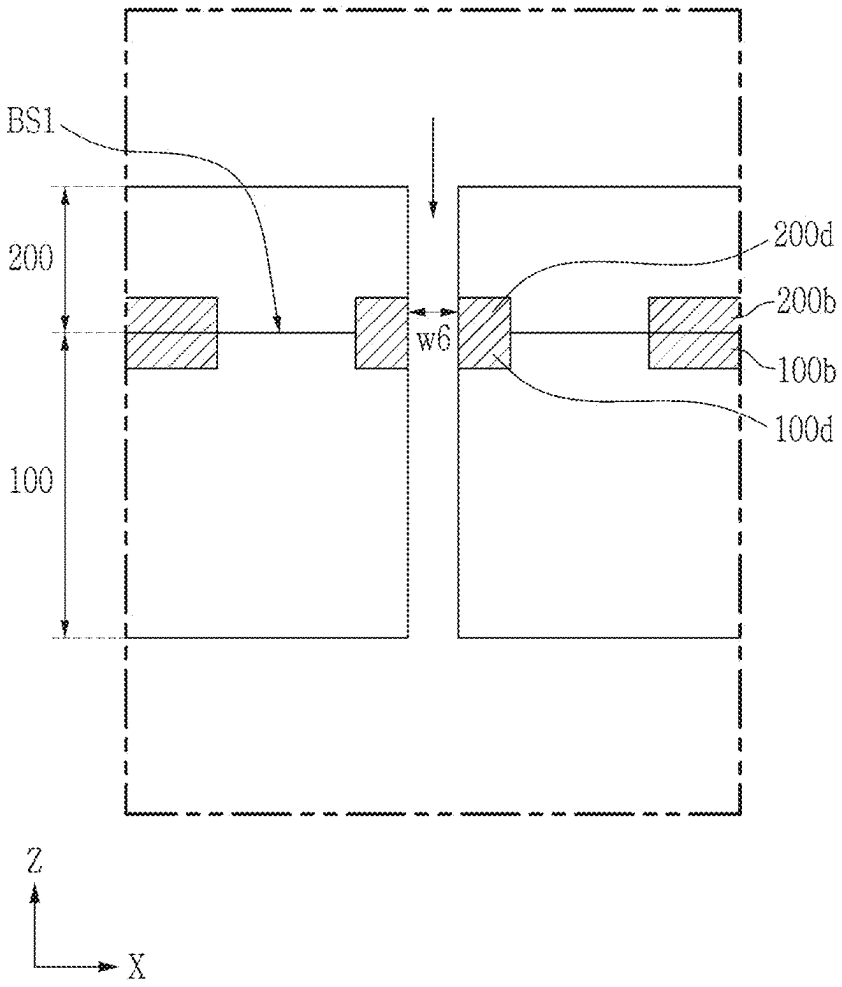

FIG. 13

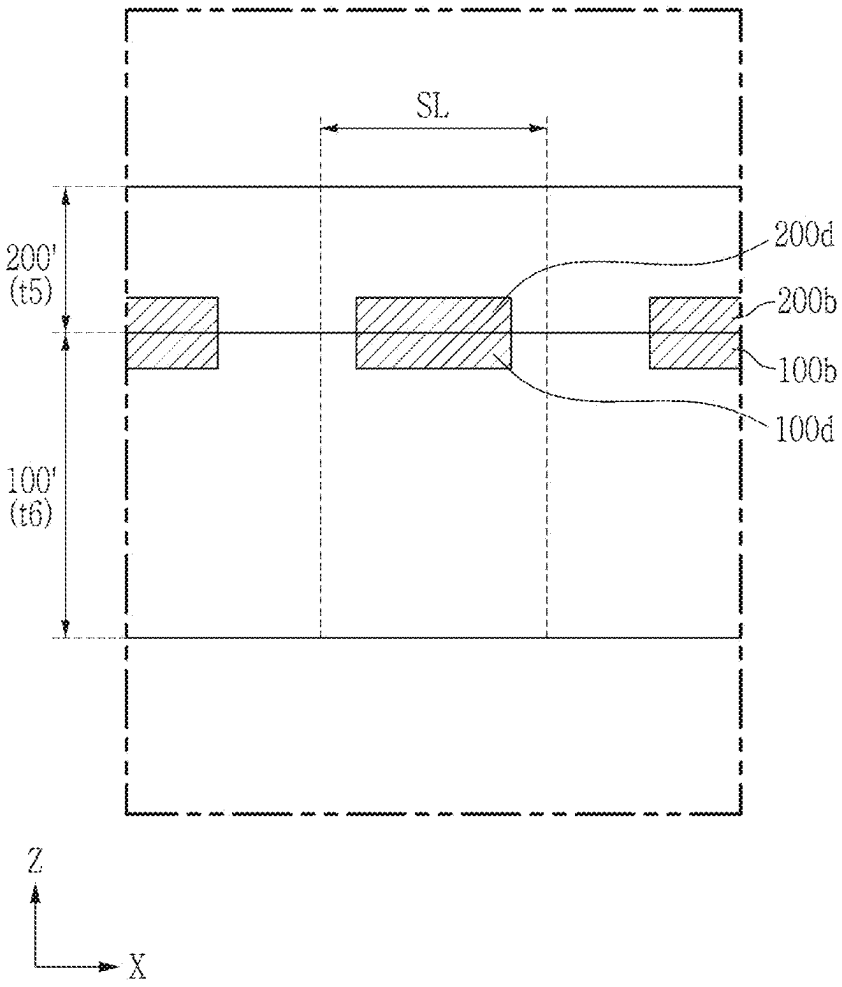

FIG. 14

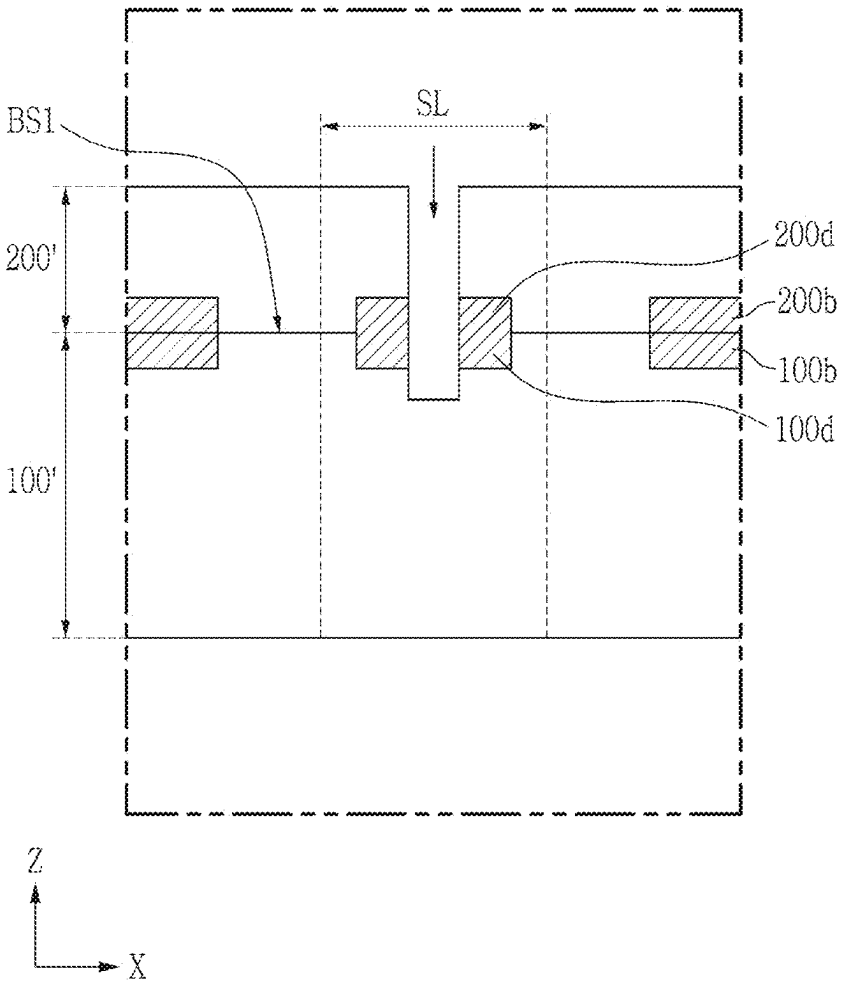

FIG. 15

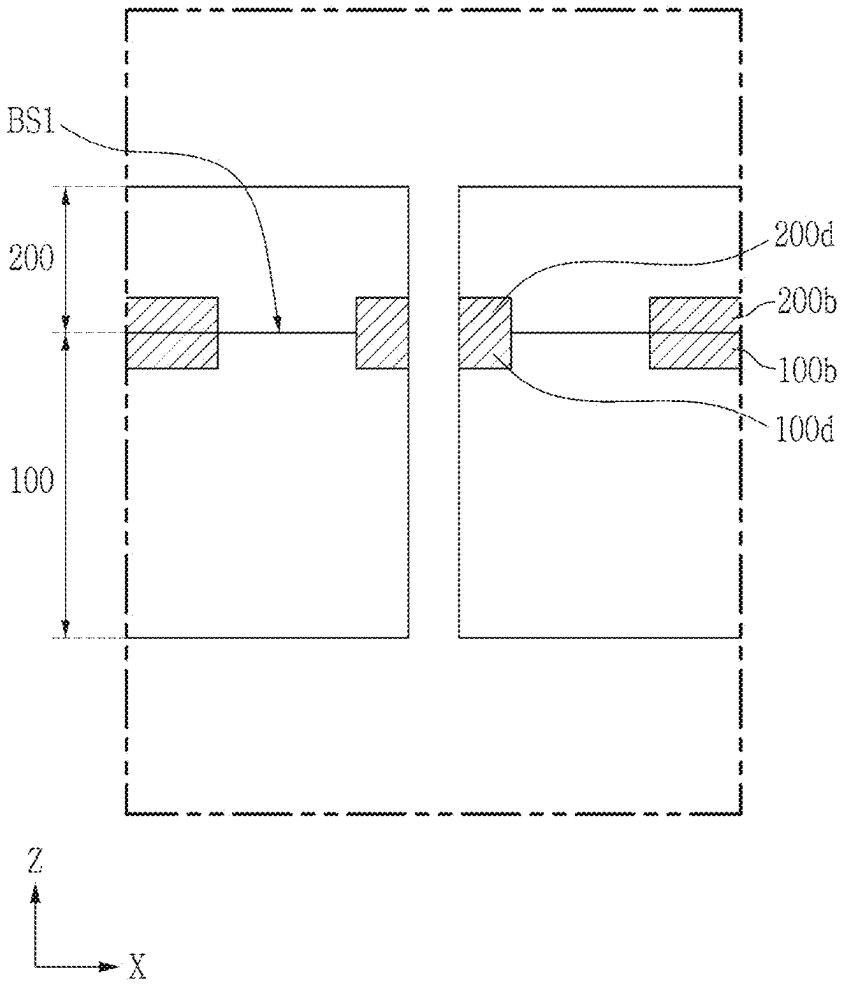

FIG. 16

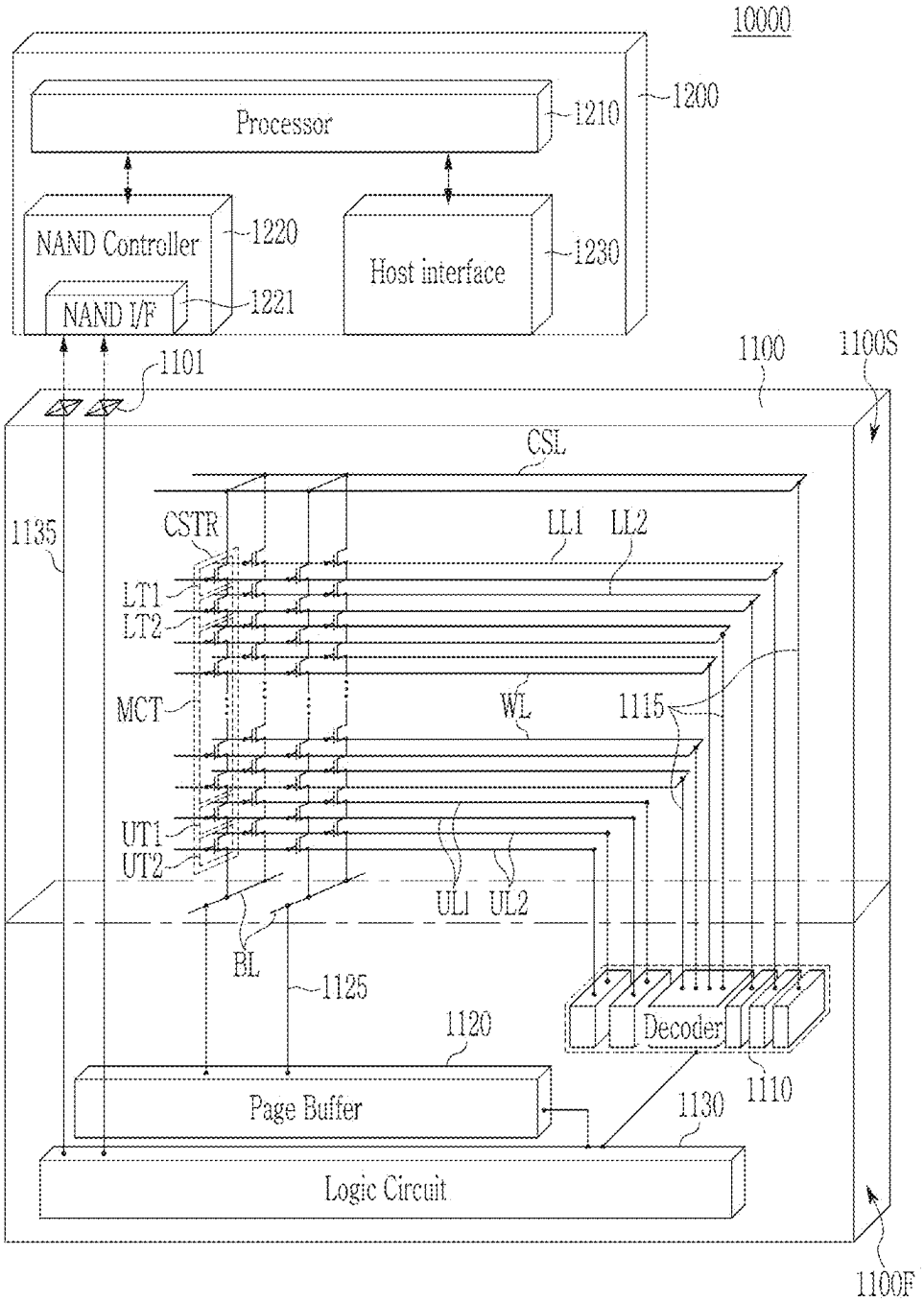
10000
Processor
1210
1200
NAND Controller
1220
NAND I/F
1221
Host interface
1230
1101
1100
1100S
CSL
1135
CSTR
LL1
LL2
LT1
LT2
MCT
WL
1115
UT1
UT2
UL1
UL2
BL
1125
1120
Decoder
1110
Page Buffer
1130
Logic Circuit
1100F

FIG. 17

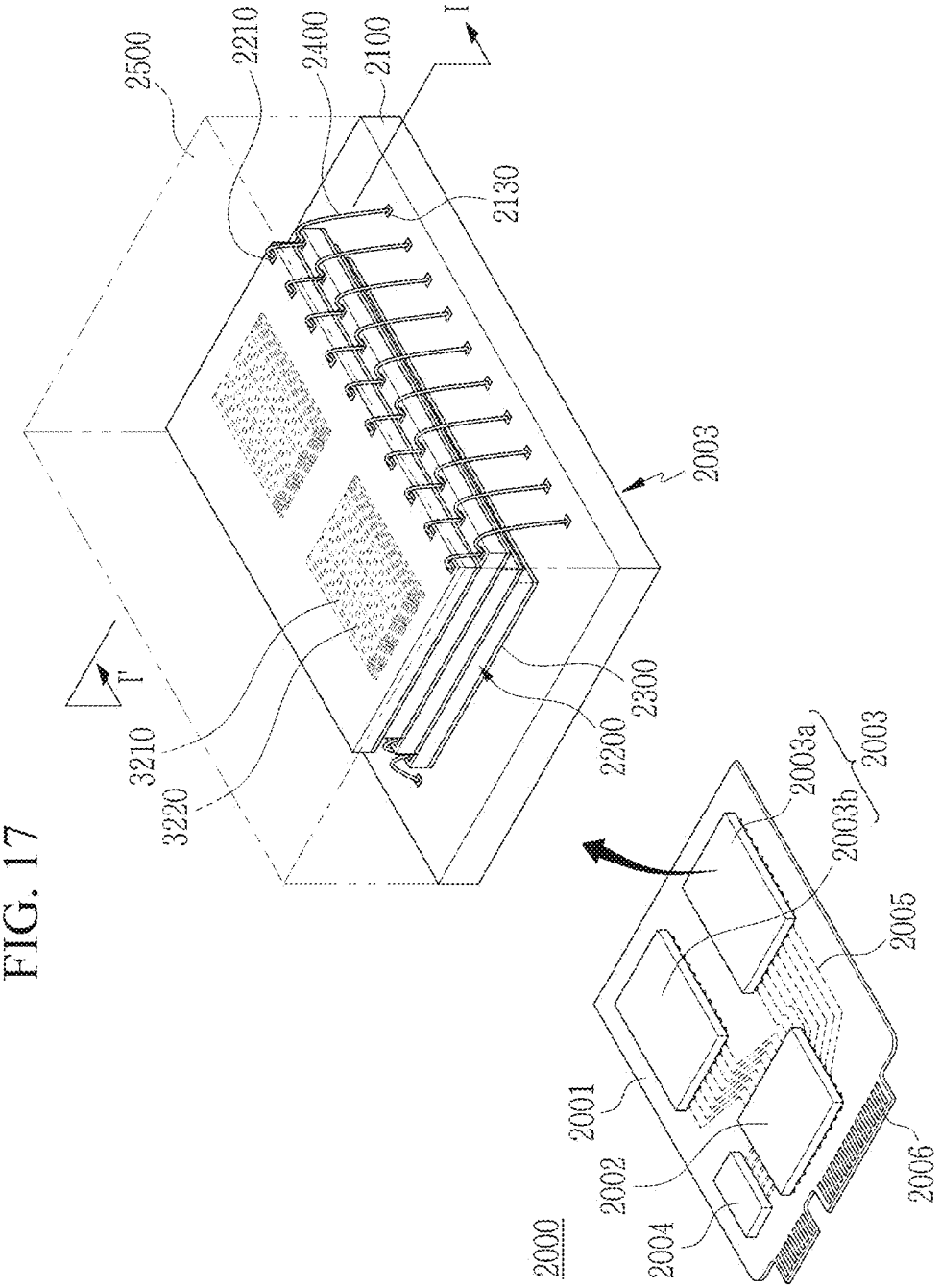
2500
2210
2400
2100
I
2130
2003
T
3210
3220
2200
2300
2003a
2003b
2003
2005
2001
2002
2004
2000
2006

FIG. 18

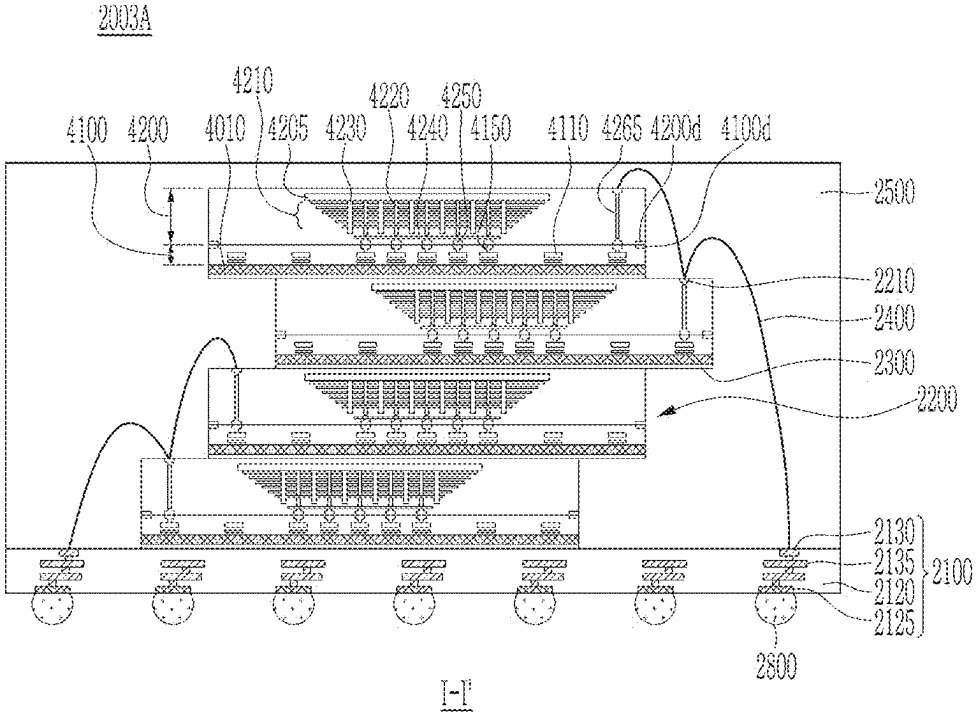
2003A
4210
4220
4250
4100
4200
4010
4205
4230
4240
4150
4110
4265
4200d
4100d
2500
2210
2400
2300
2200
2130
2135
2120
2125
2100
2800
I-I'

SEMICONDUCTOR DEVICE AND A METHOD OF MANUFACTURING THE SAME

CROSS-REFERENCE TO RELATED APPLICATIONS

[0001] This application claims priority to and the benefit under 35 U.S.C. § 119(a)-(d) of Korean Patent Application No. 10-2024-0030712 filed on Mar. 4, 2024, in the Korean Intellectual Property Office, the entire contents of which are incorporated herein by reference.

FIELD

[0002] The present disclosure relates to a semiconductor device and a method for manufacturing the same.

BACKGROUND

[0003] Wafer-to-wafer bonding is a technology of compressing the upper wafer and the lower wafer and then annealing them to directly bond them without a separate connection structure such as a solder bump. Wafer-to-wafer bonding enables thinning, high performance, and higher integration of semiconductor devices, and has an advantage of dramatically reducing the number of manufacturing processes.

[0004] This wafer-to-wafer bonding technology may be applied, for example, to semiconductor devices for storing high-capacity data in electronic systems that require data storage. For more specific example, wafer-to-wafer bonding technology may be applied to a semiconductor device including three-dimensionally arranged memory cells which are proposed instead of two-dimensionally arranged memory cells to increase the data storage capacity of the semiconductor device.

[0005] Meanwhile, a wafer-to-wafer structure in which an upper wafer and a lower wafer are bonded to each other may be separated into individual semiconductor devices including an upper chip and a lower chip through a dicing process. In such dicing process, delamination, cracks, etc. may occur between the upper and lower chips due to external force applied to the scribe lane region.

SUMMARY

[0006] The present disclosure is to provide a semiconductor device capable of increasing junction force between the upper chip and the lower chip and preventing defects such as delamination and cracks in semiconductor devices manufactured by wafer-to-wafer bonding.

[0007] The present disclosure provides, as an embodiment, a semiconductor device including a first semiconductor chip including a first bonding pad and one or more first dummy pattern; and a second semiconductor chip positioned on the first semiconductor chip, the second semiconductor chip comprising a second bonding pad and one or more second dummy pattern; wherein the first bonding pad contacts the second bonding pad, the first dummy pattern contacts the second dummy pattern, the first dummy pattern is positioned at an edge of the first semiconductor chip and configured to be exposed from a side surface of the first semiconductor chip, and the second dummy pattern is positioned at an edge of the second semiconductor chip and configured to be exposed to a side surface of the second semiconductor chip.

[0008] The present disclosure provides, as another embodiment, a semiconductor device including a peripheral circuit chip including a plurality of first wiring layers, a plurality of first bonding pads electrically connected to the plurality of first wiring layers, and one or more first dummy patterns; and a memory chip positioned on the peripheral circuit chip, the memory chip comprising a common source line, a plurality of word lines positioned between the common source line and the peripheral circuit chip, a plurality of channel structures penetrating the plurality of word lines, a plurality of second wiring layers electrically connected to the plurality of word lines and the plurality of channel structures, a plurality of second bonding pads electrically connected to the plurality of second wiring layers, and one or more second dummy patterns, wherein the plurality of first bonding pads contact the plurality of second bonding pads, the first dummy pattern contacts the second dummy pattern, the first dummy pattern is positioned at an edge of the peripheral circuit chip and configured to be exposed from a side surface of the peripheral circuit chip, and the second dummy pattern is positioned at an edge of the memory chip and configured to be exposed to a side surface of the memory chip.

[0009] The present disclosure provides, as another embodiment, a semiconductor device manufacturing method including: preparing a first wafer including a first bonding pad and a first dummy pattern; preparing a second wafer including a second bonding pad and a second dummy pattern; bonding the first wafer and the second wafer so that the first bonding pad contacts the second bonding pad and the first dummy pattern contacts the second dummy pattern; and laser processing the first wafer and the second wafer along between a scribe lane area, wherein at least a part of each of the first dummy pattern and the second dummy pattern is positioned in the scribe lane area to be processed by the laser processing.

[0010] According to one aspect of the present disclosure, in a semiconductor device manufactured by wafer-to-wafer bonding, junction force between an upper chip and a lower chip can be increased and defects such as peeling and cracking can be prevented.

BRIEF DESCRIPTION OF THE DRAWINGS

[0011] FIG. **1** to FIG. **3** are drawings illustrating a region where the dummy pattern is formed and a region where dicing is performed according to some embodiments of the wafer.

[0012] FIG. **4** is a cross-sectional view of a semiconductor device in wafer state according to some embodiments.

[0013] FIG. **5** is a cross-sectional view of a semiconductor device according to some embodiments.

[0014] FIG. **6** illustrates a layout of a dummy pattern, according to some embodiments.

[0015] FIG. **7** illustrates another layout of the dummy pattern, according to some embodiments.

[0016] FIG. **8** is a cross-sectional view of a semiconductor device in wafer state according to some embodiments.

[0017] FIG. **9** is a cross-sectional view of a semiconductor device according to some embodiments.

[0018] FIG. **10** is a drawing illustrating the detailed configurations of the semiconductor device of FIG. **9**, according to some embodiments.

[0019] FIG. **11** and FIG. **12** illustrate methods of manufacturing the semiconductor device of FIG. **5** by dicing of a wafer-to-wafer structure, according to some embodiments.

[0020] FIG. **13** to FIG. **15** illustrate other methods of manufacturing the semiconductor device of FIG. **5** by dicing of a wafer-to-wafer structure, according to some embodiments.

[0021] FIG. **16** is a drawing schematically illustrating an electronic system including a semiconductor device according to some embodiments.

[0022] FIG. **17** is a perspective view schematically illustrating an electronic system including a semiconductor device according to some embodiments.

[0023] FIG. **18** is a cross-sectional view schematically illustrating a semiconductor device according to some embodiments.

DETAILED DESCRIPTION

[0024] Hereinafter, with reference to accompanying drawings, various embodiments of the present disclosure will be described in detail so that a person of an ordinary skill can easily implement the present disclosure. The present disclosure may be implemented in many different forms and is not limited to the embodiments described herein.

[0025] In order to clearly explain the present disclosure, parts that are not relevant to the description are omitted, and identical or similar components are assigned the same reference numerals throughout the specification.

[0026] In addition, the size and thickness of each component shown in the drawings are shown arbitrarily for convenience of explanation, so the present disclosure is not necessarily limited to what is shown. In the drawings, the thickness of layers, films, panels, regions, etc., are exaggerated for clarity. And in the drawings, for convenience of explanation, the thicknesses of some layers and regions are exaggerated.

[0027] Throughout the specification, when a part is said to be "connected" to another part, this includes not only "directly connected" but also "indirectly connected" through another member. In a similar sense, this includes being "physically connected" as well as being "electrically connected". In addition, unless explicitly described to the contrary, the word "comprise", and variations such as "comprises" or "comprising", will be understood to imply the inclusion of stated elements but not the exclusion of any other elements.

[0028] It will be understood that when an element such as a layer, film, region, or substrate is referred to as being "on" another element, it can be directly on the other element, or intervening elements may also be present. In contrast, when an element is referred to as being "directly on" another element, there are no intervening elements present. In addition, being "on" or "above" a reference element means being positioned on or below the reference element, and does not necessarily mean being positioned "above" or "on" in a direction opposite to gravity.

[0029] In addition, unless explicitly described to the contrary, the word "comprise", and variations such as "comprises" or "comprising", will be understood to imply the inclusion of stated elements but not the exclusion of any other elements.

[0030] In addition, throughout the specification, when referring to "a plane view", it means that the target portion is viewed from above, and when referring to "a cross-section view", it means that a cross section of the target portion cut vertically is viewed from a side.

[0031] In addition, throughout the specification, sequential numbers such as first and second are used to distinguish a certain component from other components that are the same or similar to the component, and are not necessarily intended to refer to a specific component. Accordingly, a component referred to as a first component in a specific part of this specification may be referred to as a second component in other parts of this specification.

[0032] Additionally, throughout the specification, references to a single element include references to a plurality of the element, unless specifically stated to the contrary. For example, a reference to a single component may be used to mean not only for one component, but also for a plurality of components, such as two, three, or more.

[0033] FIG. **1** to FIG. **3** are drawings illustrating a region where the dummy pattern is formed and a region where dicing is performed according to the present disclosure of the wafer.

[0034] Referring to FIG. **1**, wafer **10** has chip regions **20** and a scribe lane region SL positioned between chip regions **20**. In the chip region **20**, known configurations such as a semiconductor substrate, circuit element(s) formed through FEOL (front end of line) and BEOL (back end of line) processes, wiring layer(s), interlayer insulating layer(s), and bonding pad(s) may exist. The scribe lane region SL is a gap between chip regions **20** for wafer dicing, and may prevent chip region **20** from being damaged during the dicing process by securing a clearance distance between chip regions **20**. When dicing the wafer **10**, the region that undergoes processing may be a region within the scribe lane region SL, and the scribe lane region SL may be wider than the region that undergoes processing.

[0035] The present disclosure intends to increase the junction force between the upper chips and the lower chips and generally prevent defects such as delamination and cracks by forming a dummy pattern **30** in the scribe lane area SL of each of the upper and lower chips in a semiconductor device manufactured by bonding two wafers **10** in a wafer-to-wafer manner.

[0036] Referring to FIG. **2** and FIG. **3**, a dummy pattern **30** according to some embodiments may be formed within the scribe lane region SL of wafer **10**. For example, at least a part of the dummy pattern **30** may be positioned in an processed region of the scribe lane region SL of wafer **10**. A processing direction and processed region of the wafer **10** are indicated by arrows in FIG. **3**. When wafer-to-wafer bonding of two wafers **10**, dummy patterns **30** may contact or bond to each other like bonding pads. When laser processing a wafer-to-wafer structure in which two wafers **10** are bonded, the dummy patterns **30** of the upper chip and lower chip may melted by heat and combined with each other. Therefore, according to the present disclosure, it is possible to provide a semiconductor device capable of increasing the junction force between the upper chips and lower chips and preventing defects such as delamination and cracks.

[0037] FIG. **4** is a cross-sectional view of a semiconductor device in wafer state according to some embodiments.

[0038] FIG. **5** is a cross-sectional view of a semiconductor device according to some embodiments.

[0039] First, referring to FIG. **5**, a semiconductor device **1000**A according to some embodiments includes a first

semiconductor chip **100** and a second semiconductor chip **200** positioned on the first semiconductor chip **100**.

[0040] The first semiconductor chip **100** may include a first substrate **110**, a plurality of first circuit elements **120**, a plurality of wiring layers **140**, **150**, and **160** electrically connected to the first circuit elements **120**, a plurality of first bonding pads **100***b* electrically connected to a plurality of wiring layers **140**, **150**, and **160**, and one or more first dummy patterns **100***d*. The number of components of the first semiconductor chip **100** may be changed depending on the design, and may, in some embodiments, be a single component or a plurality of components.

[0041] The first semiconductor chip **100** may include a first central region **110**CR where the first circuit elements **120**, wiring layers **140**, **150**, and **160**, and the first bonding pad **100***b* are positioned, and a first peripheral area **100**ER which at least partially surrounds the first central region **110**CR and where the first dummy pattern **100***d* is positioned. In the present disclosure, the central region of a component and the peripheral area surrounding the central region are defined to distinguish different areas, and the central region and the peripheral area may not have a boundary visible to eyes.

[0042] The first substrate **110** may be a semiconductor substrate. The semiconductor substrate may include semiconductor compounds such as silicon (Si) and germanium (Ge), and/or compound semiconductors such as gallium arsenide (GaAs) and indium arsenide (InAs).

[0043] A plurality of first circuit elements **120** may be formed on the first substrate **110**, and may include a metal oxide semiconductor field effect transistor (MOSFET) and a bipolar junction transistor (BJT), active elements, passive elements, etc. to form an integrated circuit (IC). The plurality of first circuit elements **120** may include a gate structure positioned between conductive regions.

[0044] The plurality of wiring layers **140**, **150**, and **160** may be electrically connected to the plurality of first circuit elements **120** and the first bonding pad **100***b*. Additionally, each of the plurality of wiring layers **140**, **150**, and **160** may be electrically connected to wiring layers positioned at other layers. Connections of each of the plurality of wiring layers **140**, **150**, and **160** to the first circuit elements **120** and the first bonding pad **100***b*, or connections between wiring layers positioned at other layers may be made by vias.

[0045] Each of the wiring layers **140**, **150**, and **160** may contain metal material, for example, copper (Cu), aluminum (Al), gold (Au), silver (Ag), cobalt (Co), nickel (Ni), lead (Pb), titanium (Ti), tungsten (W) or a combination thereof.

[0046] A first interlayer insulating layer **130** may be positioned between the plurality of first circuit elements **120** and the plurality of wiring layers **140**, **150**, **160**, between the plurality of wiring layers **140**, **150**, **160**, and between the plurality of wiring layers **140**, **150**, **160** and the first bonding pads **100***b*. The first interlayer insulating layer **130** may also be positioned between the plurality of wiring layers **140**, **150**, **160** and the first dummy pattern **100***d*. The first interlayer insulating layer **130** may include an insulating material, for example at least one of silicon oxide and silicon nitride.

[0047] The first bonding pad **100***b* may electrically connect the first semiconductor chip **100** to the second semiconductor chip **200**. The first bonding pad **100***b* may be connected to the second bonding pad **200***b*, and may be bonded by contacting the second bonding pad **200***b* by wafer-to-wafer bonding.

[0048] The first dummy pattern **100***d* may improve the junction force between the first semiconductor chip **100** and the second semiconductor chip **200**. The first dummy pattern **100***d* may be connected to the second dummy pattern **200***d*, and may be bonded by contacting the second dummy pattern **200***d* by wafer-to-wafer bonding. In addition, through the dicing process to be described later, the first dummy pattern **100***d* may be positioned at an edge of the first semiconductor chip **100** such that the first dummy pattern **100***d* is exposed from a side surface **100**S of the first semiconductor chip **100**.

[0049] The second semiconductor chip **200** may include a second substrate **210**, a plurality of second circuit elements **220**, a plurality of wiring layers **240** and **250** electrically connected to the plurality of second circuit elements **220**, a plurality of second bonding pads **200***b* electrically connected to the plurality of wiring layers **240** and **250**, and one or more second dummy patterns **200***d*. The number of components of the second semiconductor chip **200** may be changed depending on the design, and may, in some embodiments, be a single component or a plurality of components. In the drawing, the number of wiring layers **240** and **250** of the second semiconductor chip **200** is shown to be smaller than the number of wiring layers **140**, **150**, and **160** of the first semiconductor chip **100**, but not limited thereto.

[0050] The second semiconductor chip **200** may include a second central region **200**CR where the second circuit elements **220**, wiring layers **240**, and **250**, and the second bonding pad **200***b* are positioned, and a second peripheral area **200**ER which at least partially surrounds the second central region **200**CR and where the second dummy pattern **200***d* is positioned.

[0051] The second substrate **210** may be a semiconductor substrate. The semiconductor substrate may include semiconductor compounds such as silicon (Si) and germanium (Ge), and/or compound semiconductors such as gallium arsenide (GaAs) and indium arsenide (InAs).

[0052] The plurality of second circuit elements **220** may be formed on the second substrate **210**, and may include a metal oxide semiconductor field effect transistor (MOSFET) and a bipolar junction transistor (BJT), active elements, passive elements, etc. to form an integrated circuit (IC). The plurality of second circuit elements **220** may include a gate structure positioned between conductive regions.

[0053] The plurality of wiring layers **240**, and **250** may be electrically connected to the plurality of second circuit elements **220** and the second bonding pad **200***b*. Also, each of the plurality of wiring layers **240** and **250** may be electrically connected to wiring layers positioned at other layers. Connections of each of the plurality of wiring layers **240**, **250** to the second circuit elements **220** and the second bonding pad **200***b*, or connections between wiring layers positioned at different layers may be made by vias.

[0054] Each of the wiring layers **240** and **250** may contain metal material, for example, copper (Cu), aluminum (Al), gold (Au), silver (Ag), cobalt (Co), nickel (Ni), lead (Pb), titanium (Ti), tungsten (W) or a combination thereof.

[0055] A second interlayer insulating layer **230** may be positioned between the plurality of second circuit elements **220** and the plurality of wiring layers **240**, **250**, between the plurality of wiring layers **240**, **250** and between the plurality of wiring layers **240**, **250** and the second bonding pads **200***b*.

The second interlayer insulating layer **230** may also be positioned between the plurality of wiring layers **240**, **250** and the second dummy pattern **200***d*. The second interlayer insulating layer **230** may include an insulating material, for example at least one of silicon oxide and silicon nitride.

[0056] The second bonding pad **200***b* may electrically connect the second semiconductor chip **200** to the first semiconductor chip **100**. The second bonding pad **200***b* may be connected to the first bonding pad **100***b*, and may be bonded by contacting the first bonding pad **100***b* by wafer-to-wafer bonding.

[0057] The second dummy pattern **200***d* may improve the junction force between the second semiconductor chip **200** and the first semiconductor chip **100**. The second dummy pattern **200***d* may be connected to the first dummy pattern **100***d*, and may be bonded by contacting the first dummy pattern **100***d* by wafer-to-wafer bonding. In addition, through the dicing process to be described later, the second dummy pattern **200***d* may be positioned at an edge of the second semiconductor chip **200** such that the second dummy pattern **200***d* is exposed from a side surface **200**S of the second semiconductor chip **200**.

[0058] Referring to FIG. **4**, the semiconductor device **1000**A may be manufactured by dicing the wafer-to-wafer structure **1000**A', which is manufactured by wafer-to-wafer bonding the first wafer **100'** and the second wafer **200'**, through laser processing to separate into individual semiconductor devices including the first semiconductor chip **100** and the second semiconductor chip **200**.

[0059] Wafer-to-wafer bonding is a technology that directly bonds an upper wafer and a lower wafer, which are separately manufactured, without a separate connection structure such as a solder bump. For example, the bonding method may refer to a method of electrically connecting a bonding pad formed on the uppermost wiring layer of the upper chip and a bonding pad formed on the uppermost wiring layer of the lower chip. For example, in case that the bonding pad is made of copper (Cu), the bonding method may be a Cu—Cu bonding method. Wafer-to-wafer bonding may be performed by pressing the upper wafer and the lower wafer and then annealing them, but not limited thereto. Wafer-to-wafer bonding technology enables thinning, high performance, and higher integration of semiconductor devices, and has an advantage of dramatically reducing the number of manufacturing processes.

[0060] In the present disclosure, the first dummy pattern **100***d* and the second dummy pattern **200***d* are formed on bonding surfaces of first wafer **100'** and second wafer **200'**, and within scribe lane region SL. When wafer-to-wafer bonding of the first wafer **100'** and the second wafer **200'**, the first bonding pad **100***b* may be bonded by contacting the second bonding pad **200***b*, and the first dummy pattern **100***d* may be bonded by contacting the second dummy pattern **200***d*. Therefore, in the wafer-to-wafer structure **1000**A', the first bonding pad **100***b* may overlap the second bonding pad **200***b*, and the first dummy pattern **100***d* may overlap the second dummy pattern **200***d* on a plane. In this disclosure, for convenience of explanation, the same names and symbols were used for the dummy pattern in the wafer-to-wafer structure **1000**A' and the dummy pattern in the semiconductor device (a structure wherein a part of the dummy pattern of the wafer-to-wafer structure **1000**A' was removed through laser processing).

[0061] The width of the laser processed region (indicated by a dot lined arrow in FIG. **4**) of the wafer-to-wafer structure (**1000**A') may be narrower than the width of each of the first dummy patterns **100***d* and the second dummy patterns **200***d* in the X-direction. Therefore, the first dummy pattern **100***d* is positioned at an edge of the first semiconductor chip **100** such that the first dummy pattern **100***d* can be exposed from a side surface **100**S of the first semiconductor chip **100**, and the second dummy pattern **200***d* may be positioned at an edge of the second semiconductor chip **200** such that the second dummy pattern **200***d* can be exposed from a side surface **200**S of the second semiconductor chip **200**. The first dummy pattern **100***d* may form a part of the side surface **100**S of the first semiconductor chip **100**, and the second dummy pattern **200***d* may form a part of the side surface **200**S of the second semiconductor chip **200**. The first dummy pattern **100***d* and the second dummy pattern **200***d* remain in the first semiconductor chip **100** and the second semiconductor chip **200**, respectively, which may further improve the junction force between the first semiconductor chip **100** and the second semiconductor chips **200** in the semiconductor device **1000**A.

[0062] In at least a part of the interface BS**1** between the first semiconductor chip **100** and the second semiconductor chip **200**, the first dummy pattern **100***d* and the second dummy pattern **200***d* may have no boundary. At least a part of each of the first dummy pattern **100***d* and the second dummy pattern **200***d* may be combined and integrated after melting during laser processing, and no boundary may exist between them. For example, in the entire interface BS**1** of the first semiconductor chip **100** and the second semiconductor chip **200**, the first dummy pattern **100***d* and the second dummy pattern **200***d* may have no boundary (see FIG. **12** and FIG. **15**). However, depending on the material of the dummy patterns **100***d* and **200***d*, the process conditions of laser processing, etc., the first dummy pattern **100***d* and the second dummy pattern **200***d* have a boundary in at least a part of the interface BS**1** of the first semiconductor chip **100** and the second semiconductor chip **200**.

[0063] For easily combining the first dummy pattern **100***d* and the second dummy pattern **200***d*, a material having a low melting point may be used as the material for the first dummy pattern **100***d* and/or the second dummy pattern **200***d*. In some embodiments, the melting points of the first dummy pattern **100***d* and the second dummy pattern **200***d* may be equal to or lower than the melting points of the first bonding pad **100***b* and the second bonding pad **200***b*. As a more specific example, copper (Cu) may be used as the material for the first bonding pad **100***b* and second bonding pad **200***b*, and copper (Cu), aluminum (Al), etc. may be used as the material for the first dummy pattern **100***d* and the second dummy pattern **200***d*.

[0064] The first dummy pattern **100***d* may be formed in the same process stage as the first bonding pad **100***b*, and the second dummy pattern **200***d* may be formed in the same process stage as the second bonding pad **200***b*. Therefore, the first dummy pattern **100***d* may be positioned at substantially the same level as the first bonding pad **100***b*, and the second dummy pattern **200***d* may be positioned at substantially the same level as the second bonding pad **200***b*. In this specification, "certain components are positioned at the 'substantially' same level" refers not only to a case where the first dummy pattern **100***d* and the first bonding pad **100***b* (and/or the second dummy pattern **200***d* and the second

bonding pad **200***b*) are positioned at the same level, but also to a case where the components have a level difference that is relatively fine (e.g., small) due to an error in processes. Also, in this specification, meaning of "certain components are positioned at the same 'level'" includes a case that a surface or the other surface opposite thereto of each of the components are positioned at the same level.

[0065] From a similar perspective, the first dummy pattern **100***d* may include the same material as the first bonding pad **100***b*, and the second dummy pattern **200***d* may include the same material as the second bonding pad **200***b*. For example, copper (Cu) or aluminum (Al) may be used as the material for first bonding pad **100***b*, second bonding pad **200***b*, first dummy pattern **100***d*, and/or second dummy pattern **200***d*.

[0066] Referring to FIG. **5** again, the distance d**1** between the first dummy pattern **100***d* and the first central region **110**CR and the distance d**2** between the second dummy pattern **200***d* and the second central region **200**CR may be 10 μm or more, respectively. In order to prevent the main components (circuit elements **120**, **220**, wiring layers **140**, **150**, **160**, **240**, **250**, bonding pads **100***b*, **200***b*, etc.), which is positioned in the first central region **100**CR and the second central region **200**CR for operating the semiconductor device, from thermal damages due to the heat conducted to the dummy patterns **100***d* and **200***d* during laser processing, it may be desirable to separate the dummy patterns **100***d* and **200***d* from the main components with a certain distance.

[0067] The width w**1** of the first dummy pattern **100***d* and the width w**2** of the second dummy pattern **200***d* respectively may be 7 μm or more and 13 μm or less, 8 μm or more and 12 μm or less, 9 μm or more and 11 μm or less, 9.5 μm or more and 10.5 μm or less, or 10 μm. The width w**1** of the first dummy pattern **100***d* means the length in a direction perpendicular to the side surface **100**S of the first semiconductor chip **100**, and the width w**2** of the second dummy pattern **200***d* means the length in a direction perpendicular to the side surface **200**S of the second semiconductor chip **200**. For example, in a cross-sectional view on X-Z plane of FIG. **5**, the width of each of the first dummy pattern **100***d* and the second dummy pattern **200***d* means a width in the X direction. The widths of each of the first dummy pattern **100***d* and the second dummy pattern **200***d* may be within the above-described range so that the processing width during dicing processes allows for sufficient adhesion between the first dummy pattern **100***d* and the second dummy pattern **200***d* and an appropriate distance between the dummy patterns **100***d*, **200***d* and the central regions **100**CR, **200**CR.

[0068] The thickness t**1** of the first dummy pattern **100***d* and the thickness t**2** of the second dummy pattern **200***d* may each be 5 μm or more, respectively. In order to secure sufficient junction force between the first dummy pattern **100***d* and the second dummy pattern **200***d*, and thereby to preventing defects such as delamination and cracks between the first semiconductor chip **100** and the second semiconductor chip **200**, it may be desirable for the thickness of each of the first dummy pattern **100***d* and the second dummy pattern **200***d* to be within the above-described range.

[0069] FIG. **6** illustrates a layout of a dummy pattern.

[0070] The first dummy pattern **100***d* and the second dummy pattern **200***d* may be positioned continuously along the edges of the first semiconductor chip **100** and the second semiconductor chip **200**, respectively. In some embodiments, forming the first dummy pattern **100***d* and the second dummy pattern **200***d* continuously along a processing direction in the scribe lane area SL may form a single first dummy pattern **100***d* and a single second dummy pattern **200***d* continuously positioned along the edges of the first semiconductor chip **100** and the second semiconductor chip **200**.

[0071] FIG. **7** illustrates another embodiment layout of the dummy pattern.

[0072] The first dummy patterns **100***d* and second dummy patterns **200***d* may be positioned discontinuously along the edges of first semiconductor chip **100** and second semiconductor chip **200**, respectively. In some embodiments, forming the first dummy pattern **100***d* and the second dummy pattern **200***d* discontinuously along the processing direction in the scribe lane area SL may form a plurality of first dummy patterns **100***d* and second dummy patterns **200***d* positioned discontinuously along the edges of the first semiconductor chip **100** and the second semiconductor chip **200**.

[0073] FIG. **8** is a cross-sectional view of a semiconductor device in wafer state according to some embodiments.

[0074] FIG. **9** is a cross-sectional view of a semiconductor device according to some embodiments.

[0075] FIG. **8** and FIG. **9** shows some embodiments in which the dummy patterns of the present disclosure are applied to memory semiconductor devices such as NAND flash.

[0076] First, referring to FIG. **9**, the semiconductor device **1000**B according to some embodiments includes a peripheral circuit chip **300** and a memory chip **400** positioned on the peripheral circuit chip **300**.

[0077] The peripheral circuit chip **300** may include a plurality of wiring layers **330** and **340**, a plurality of first bonding pads **300***b* electrically connected to the plurality of wiring layers **330** and **340**, and one or more first dummy patterns **300***d*. The number of components of the peripheral circuit chip **300** may be changed depending on the design, and may, in some embodiments, be a single component or a plurality of components.

[0078] In addition, the peripheral circuit chip **300** may have a first central region **300**CR where the plurality of wiring layers **330**, and **340** and a plurality of first bonding pads **300***b* are positioned, and a first peripheral area **300**ER which at least partially surrounds the first central region **300**CR and where the first dummy pattern **300***d* is positioned.

[0079] The plurality of wiring layers **330**, and **340** may serve as a peripheral wiring and may be electrically connected to each other through vias or electrically connected to the first bonding pads **300***b*.

[0080] The plurality of the wiring layers **330** and **340** may contain metal material, for example, copper (Cu), aluminum (Al), gold (Au), silver (Ag), cobalt (Co), nickel (Ni), lead (Pb), titanium (Ti), tungsten (W) or a combination thereof.

[0081] A first interlayer insulating layer **315** may be positioned between the plurality of wiring layers **330** and **340**, and between the plurality of wiring layers **330** and **340** and the first bonding pads **300***b*. The first interlayer insulating layer **315** may also be positioned between the plurality of wiring layers **330**, **340** and the first dummy pattern **300***d*. The first interlayer insulating layer **315** may include an insulating material, for example at least one of silicon oxide and silicon nitride.

[0082] The first bonding pad **300***b* may electrically connect the peripheral circuit chip **300** to the memory chip **400**. The first bonding pad **300***b* may be connected to the second

bonding pad **400***b*, and may be bonded by contacting the second bonding pad **400***b* by wafer-to-wafer bonding.

[0083] The first dummy pattern **300***d* may improve the junction force between the peripheral circuit chip **300** and the memory chip **400**. The first dummy pattern **300***d* may be connected to the second dummy pattern **400***d*, and may be bonded by contacting the second dummy pattern **400***d* by wafer-to-wafer bonding. In addition, through the dicing process to be described later, the first dummy pattern **300***d* may be positioned at an edge of the peripheral circuit chip **300** such that the first dummy pattern **300***d* can be exposed from a side surface **300**S of the peripheral circuit chip **300**.

[0084] The memory chip **400** may include a common source line **420**, a plurality of word lines **430** positioned between the common source line **420** and the peripheral circuit chip **300**, a plurality of channel structures CH penetrating the plurality of word lines **430**, a plurality of wiring layers **450**, **460** electrically connected to the plurality of word lines **430** and the plurality of channel structures CH, a plurality of second bonding pads **400***b* electrically connected to the plurality of wiring layers **450**, **460** and one or more second dummy patterns **400***d*. The number of components of the memory chip **400** may be changed depending on the design, and may, in some embodiments, be a single component or a plurality of components.

[0085] In addition, the memory chip **400** may have a second central region **400**CR where the common source line **420**, a plurality of word lines **430**, a plurality of channel structures CH, a plurality of wiring layers **450** and **460**, and a plurality of second bonding pads **400***b* are positioned, and a second peripheral area **400**ER which at least partially surrounds the second central region **400**CR and where the second dummy pattern **400***d* is positioned. The second central region **400**CR and the second peripheral area **400**ER may be divided based on the outermost component among the above-described components included in the second central region **400**CR. While the width of the second peripheral area **400**ER is shown to be the same as the width of the first peripheral area **300**ER in the drawing, it is an example, and the width of the second peripheral area **400**ER and the width of the first peripheral area **300**ER may be different.

[0086] The second bonding pad **400***b* may electrically connect the memory chip **400** with the peripheral circuit chip **300**. The second bonding pad **400***b* may be connected to the first bonding pad **300***b*, and may be bonded by contacting the first bonding pad **300***b* by wafer-to-wafer bonding.

[0087] The second dummy pattern **400***d* may improve the junction force between the memory chip **400** and the peripheral circuit chip **300**. The second dummy pattern **400***d* may be connected to the first dummy pattern **300***d*, and may be bonded by contacting the first dummy pattern **300***d* by wafer-to-wafer bonding. In addition, through the dicing process to be described later, the second dummy pattern **400***d* may be positioned at an edge of the memory chip **400** such that the second dummy pattern **400***d* can be exposed from a side surface **400**S of the memory chip **400**.

[0088] The common source line **420**, the plurality of word lines **430**, the channel structures CH, the plurality of wiring layers **450**, and **460** will be described in more detail along with other detailed configurations of the semiconductor device in the description for FIG. **10**.

[0089] Referring to FIG. **8**, the semiconductor device **1000**B may be manufactured by dicing the wafer-to-wafer structure **1000**B', which is manufactured by wafer-to-wafer bonding the first wafer **300'** and the second wafer **400'**, through laser processing to separate into individual semiconductor devices including the peripheral circuit **300** and the memory chip **400**.

[0090] In the present disclosure, the first dummy pattern **300***d* and the second dummy pattern **400***d* are formed at the bonding surface of first wafer **300'** and second wafer **400'**, and within the scribe lane region SL. When wafer-to-wafer bonding of the first wafer **300'** and the second wafer **400'**, the plurality of first bonding pads **300***b* may be in contact with the plurality of second bonding pads **400***b* such that the plurality of first bonding pads **300***b* and the plurality of second bonding pads **400***b* are bonded, and the dummy pattern **300***d* may be in contact with the second dummy pattern **400***d* such that the first dummy pattern **300***d* and the second dummy pattern **400***d* are bonded. Therefore, in the wafer-to-wafer structure **1000**B', the first bonding pad **300***b* may overlap the second bonding pad **400***b*, and the first dummy pattern **300***d* may overlap the second dummy pattern **400***d* on a plane.

[0091] The width of the laser processed region (indicated by a dot lined arrow in FIG. **8**) of the wafer-to-wafer structure **1000**B' may be narrower than the width of each of the first dummy patterns **300***d* and the second dummy patterns **400***d* in the X-direction. Therefore, the first dummy pattern **300***d* is positioned at an edge of the peripheral circuit **300** such that the first dummy pattern **300***d* can be exposed from a side surface **300**S of the peripheral circuit chip **300**, and the second dummy pattern **400***d* may be positioned at an edge of the memory chip **400** such that the second dummy pattern **400***d* can be exposed from a side surface **400**S of the memory chip **400**. The first dummy pattern **300***d* may form a part of the side surface **300**S of the peripheral circuit chip **300**, and the second dummy pattern **400***d* may form a part of the side surface **400**S of the memory chip **400**. The first dummy pattern **300***d* and the second dummy pattern **400***d* remain in the peripheral circuit chip **300** and the second memory chip **400**, respectively, which may further improve the junction force between the peripheral circuit chip **300** and the memory tor chips **400** in the semiconductor device **1000**B.

[0092] In at least some of the interface BS**2** between the peripheral circuit chip **300** and the memory chip **400**, the first dummy pattern **300***d* and the second dummy pattern **400***d* may have no boundary. At least a part of each of the first dummy pattern **300***d* and the second dummy pattern **400***d* may be combined and integrated after melting in laser processing, and no boundary may exist between them. For example, in the entire interface BS**2** between the peripheral circuit chip **300** and the memory chip **400**, the first dummy pattern **300***d* and the second dummy pattern **400***d* may have no boundary. However, in some embodiments, depending on the material of the dummy patterns **300***d* and **400***d*, the process conditions of laser processing, etc., the first dummy pattern **300***d* and the second dummy pattern **400***d* have a boundary in at least a part of the interface BS**2** of the peripheral circuit chip **300** and the memory chip **400**.

[0093] For the ease of joining the first dummy pattern **300***d* and the second dummy pattern **400***d*, a material of low melting point may be used as the material for the first dummy pattern **300***d* and the second dummy pattern **400***d*. For example, the melting points of the first dummy pattern **300***d* and the second dummy pattern **400***d* may be equal to

or lower than the melting points of the first bonding pad **300***b* and the second bonding pad **400***b*. As a more specific example, copper (Cu) may be used as the material for the first bonding pad **300***b* and second bonding pad **400***b*, and copper (Cu), aluminum (Al), etc. may be used as the material for the first dummy pattern **300***d* and the second dummy pattern **400***d*.

[0094] The first dummy pattern **300***d* may be formed in the same process stage as the first bonding pad **300***b*, and the second dummy pattern **400***d* may be formed in the same process stage as the second bonding pad **400***b*. Therefore, the first dummy pattern **300***d* may be positioned at substantially the same level as the first bonding pad **300***b*, and the second dummy pattern **400***d* may be positioned at substantially the same level as the second bonding pad **400***b*.

[0095] From a similar perspective, the first dummy pattern **300***d* may include the same material as the first bonding pad **300***b*, and the second dummy pattern **400***d* may include the same material as the second bonding pad **400***b*. For example, copper (Cu) or aluminum (Al) may be used as the material for first bonding pad **300***b*, second bonding pad **400***b*, first dummy pattern **300***d*, and second dummy pattern **400***d*.

[0096] Referring to FIG. **9** again, the distance d**3** between the first dummy pattern **300***d* and the first central region **300**CR and the distance d**4** between the second dummy pattern **400***d* and the second central region **400**CR may be 10 μm or more, respectively. In order to prevent the main components (wiring layers **330**, **340**, first bonding pads **300***b*, common source line **420**, word lines **430**, channel structures (CH), wiring layers **450** and **460**, second bonding pads **400***b*, etc.), which are positioned in the first central region **300**CR and the second central region **400**CR for operating the semiconductor device, from thermal damages due to the heat conducted to the dummy patterns **100***d* and **200***d* during laser processing, it may be desirable to separate the dummy patterns **300***d* and **400***d* from the main components with a certain distance.

[0097] The width w**3** of the first dummy pattern **300***d* and the width w**4** of the second dummy pattern **400***d* respectively may be 7 μm or more and 13 μm or less, 8 μm or more and 12 μm or less, 9 μm or more and 11 μm or less, 9.5 μm or more and 10.5 μm or less, or 10 μm. The width w**3** of the first dummy pattern **300***d* means the length in a direction perpendicular to the side surface **300**S of the peripheral circuit chip **300**, and the width w**4** of the second dummy pattern **400***d* means the length in a direction perpendicular to the side surface **400**S of the memory chip **400**. For example, in a cross-sectional view on X-Z plane of FIG. **5**, the width of each of the first dummy pattern **300***d* and the second dummy pattern **400***d* means a width in the X direction. The widths of each of the first dummy pattern **300***d* and the second dummy pattern **400***d* may be within the above-described range so that the processing width during dicing processes allow for sufficient adhesion between the first dummy pattern **300***d* and the second dummy pattern **400***d* and an appropriate distance between the dummy patterns **300***d*, **400***d* and the central regions **300**CR, **400**CR.

[0098] The thickness t**3** of the first dummy pattern **300***d* and the thickness t**4** of the second dummy pattern **400***d* may each be 5 μm or more, respectively. In order to secure sufficient junction force between the first dummy pattern **300***d* and the second dummy pattern **400***d*, thereby preventing defects such as delamination and cracks between the peripheral circuit chip **300** and the memory chip **400**, it may be desirable for the thickness of each of the first dummy pattern **300***d* and the second dummy pattern **400***d* to be within the above-described range.

[0099] FIG. **10** is a drawing illustrating the detailed configurations of the semiconductor device of FIG. **9**.

[0100] The peripheral circuit region (PERI) and the cell region (CELL) of FIG. **10** may respectively correspond to peripheral circuit chip **300** and memory chip **400** of FIG. **9**.

[0101] In FIG. **10**, sub-codes are used for the components included in the external pad bonding region (PA), word line bonding region (WLBA), and bit line bonding region (BLBA). For example, wiring layers **330***a*, **330***b*, and **330***c* are included in wiring layer **330**, and wiring layers **340***a*, **340***b*, and **340***c* are included in wiring layer **340**. Wiring layers **450***a*, **450***b*, and **450***c* are included in wiring layer **450**, and wiring layers **460***a*, **460***b*, and **460***c* are included in wiring layer **460**. Additionally, the first bonding pads **371***a*, **372***a*, **371***b*, **372***b*, **371***c*, **372***c* are included in the first bonding pad **300***b*, and the second bonding pads **471***a*, **472***a*, **471***b*, **472***b*, **471***c*, **472***c* are included in the second bonding pad **400***b*. The peripheral circuit region (PERI) may include a first substrate **310**, an interlayer insulating layer **315**, a plurality of circuit elements **320***a*, **320***b*, **320***c* formed on the first substrate **310**, first wiring layers **330***a*, **330***b*, **300***c* respectively connected to the plurality of circuit elements **320***a*, **320***b*, **320***c*, and second wiring layers **340***a*, **340***b*, **340***c* formed on the first wiring layers **330***a*, **330***b*, **330***c*. In some embodiments, the first wiring layers **330***a*, **330***b*, **330***c* may be formed of tungsten having relatively high resistance, and the second wiring layers **340***a*, **340***b*, and **340***c* may be formed of copper having relatively low resistance.

[0102] It should be noted that while only the first wiring layers **330***a*, **330***b*, **330***c* and the second wiring layers **340***a*, **340***b*, **340***c* are shown and described in this specification, the present disclosure is not limited in this manner. For example, at least one or more wiring layers may be formed on the second wiring layers **340***a*, **340***b*, **340***c*. At least some of the one or more wiring layers formed on the second wiring layers **340***a*, **340***b*, **340***c* may be made of aluminum, etc., which has a resistance lower than copper that forms the second wiring layers **340***a*, **340***b*, **340***c*.

[0103] The interlayer insulating layer **315** is disposed on the first substrate **310** to cover the plurality of circuit elements **320***a*, **320***b*, **320***c*, first wiring layer **330***a*, **330***b*, **330***c*, and second wiring layer **340***a*, **340***b*, **340***c*, and may include insulating materials such as silicon oxide, silicon nitride, etc.

[0104] Lower bonding pads **371***b* and **372***b* may be formed on the second wiring layer **340***b* of the word line bonding region (WLBA). In the word line bonding region (WLBA), the lower bonding pads **371***b*, **372***b* of the peripheral circuit region (PERI) may be electrically connected to the upper bonding pads **471***b*, **472***b* of the cell region (CELL) by a bonding method, and the lower bonding pads **371***b*, **372***b* and upper bonding pads **471***b*, **472***b* may be formed of aluminum, copper, or tungsten, etc.

[0105] The cell region (CELL) may provide at least one memory block. The cell region (CELL) may include a second substrate **410** and a common source line **420**. On the second substrate **410**, a plurality of word lines **430** (**431**, **432**, **433**, **434**, **435**, **436**, **437** and **438**) may be stacked along the Z-axis direction perpendicular to the top surface of the second substrate **410**. String selection lines and ground selection lines may be disposed respectively above and

below the word lines **430**, and a plurality of word lines **430** may be disposed between the string selection lines and the ground selection line.

[0106] In the bit line bonding region (BLBA), the channel structure (CH) extends in a direction perpendicular to the top surface of the second substrate **410** and may penetrate the word lines **430**, string selection lines, and ground selection lines. The channel structure (CH) may include a data storage layer, a channel layer, and/or an embedded insulating layer. The channel layer may be electrically connected to the first wiring layer **450***c* and the second wiring layer **460***c*. For example, the first wiring layer **450***c* may be a bit line contact, and the second wiring layer **460***c* may be a bit line. In some embodiments, bit line **460***c* may extend along the Y direction parallel to the top surface of the second substrate **410**.

[0107] In some embodiments, a region where the channel structure (CH) and bit line **460***c* are disposed may be defined as a bit line bonding region (BLBA). In the bit line bonding region (BLBA), the bit line **460***c* may be electrically connected to the circuit elements **320***c* providing page buffer **393** in the peripheral circuit region (PERI). For example, the bit line **460***c* may be connected to upper bonding pads **471***c*, **472***c* in the peripheral circuit region (PERI), and upper bonding pads **471***c*, **472***c* may be connected to the lower bonding pads **371***c*, **372***c* connected to circuit elements **320***c* of page buffer **393**.

[0108] In the word line bonding region (WLBA), the word lines **430** may extend along the X direction parallel to the top surface of the second substrate **410** and may be connected to a plurality of cell contact plugs **440** (**441**, **442**, **443**, **444**, **445**, **446** and **447**). The word lines **430** and the cell contact plugs **440** may be connected to each other at pads provided by extending at least some of the word lines **430** with different lengths along the X direction. The first wiring layer **450***b* and the second wiring layer **460***b* may be sequentially connected to the top of the cell contact plugs **440** connected to word lines **430**. The cell contact plugs **440** may be connected to the peripheral circuit region (PERI) in the word line bonding region (WLBA), through the upper bonding pads **471***b*, **472***b* of the cell region (CELL) and the lower bonding pads **371***b*,**372***b* of the peripheral circuit region (PERI).

[0109] The cell contact plugs **440** may be electrically connected to circuit elements **320***b* that provide providing a row decoder **394** in the peripheral circuit region (PERI). In some embodiments, an operating voltage of circuit elements **320***b* providing the row decoder **394** may be different from an operating voltage of circuit elements **320***c* providing the page buffer **393**. For example, the operating voltage of circuit elements **320***c* providing page buffer **393** may be greater than the operating voltage of circuit elements **320***b* providing the row decoder **394**.

[0110] A common source line contact plug **480** may be placed in the external pad bonding region (PA). The common source line contact plug **480** is made of a conductive material such as metal, metal compound, and/or polysilicon, and may be electrically connected to the common source line **420**. A first wiring layer **450***a* and a second wiring layer **460***a* may be stacked sequentially on the top of the common source line contact plug **480**. For example, a region where the common source line contact plug **480**, first wiring layer **450***a*, and second wiring layer **460***a* are disposed may be defined as an external pad bonding region (PA).

[0111] Input/output pads **305**, and **405** may be disposed in the external pad bonding region (PA). A lower insulating layer **301** covering the lower surface of the first substrate **310** may be formed below the first substrate **310**, and a first input/output pad **305** may be formed on the lower insulating layer **301**. The first input/output pad **305** is connected to at least one of the plurality of circuit elements **320***a*, **320***b*, **320***c* disposed in the peripheral circuit region (PERI) through the first input/output contact plug **303**, and may be separated from the first substrate **310** by the lower insulating layer **301**. In addition, a side insulating layer may be disposed between the first input/output contact plug **303** and the first substrate **310** to electrically separate the first input/output contact plug **303** from the first substrate **310**.

[0112] An upper insulating layer **401** covering the top surface of the second substrate **410** may be formed on the top of the second substrate **410**, and a second input/output pad **405** may be disposed on the upper insulating layer **401**. The second input/output pad **405** may be connected to at least one of the plurality of circuit elements **320***a*, **320***b*, **320***c* disposed in the peripheral circuit region (PERI) through the second input/output contact plug **403**.

[0113] In some embodiments, the second substrate **410** and the common source line **420** may not be disposed in a region where the second input/output contact plug **403** is disposed. Also, the second input/output pad **405** may not overlap the word lines **430** in a third direction (Z-axis direction). The second input/output contact plug **403** is separated from the second substrate **410** in a direction parallel to the top surface of the second substrate **410**, and may penetrate the interlayer insulating layer **415** of the cell region (CELL) to be connected to the second input/output pad **405**.

[0114] According to some embodiments, the first input/output pad **305** and the second input/output pad **405** may be formed selectively (e.g., individually). For example, the semiconductor device may include only the first input/output pad **305** disposed on the top of the first substrate **301**, or may include only the second input/output pad **405** disposed on the top of the second substrate **401**. Alternatively, the semiconductor device may include both the first input/output pad **305** and the second input/output pad **405**.

[0115] In each of the external pad bonding region (PA) and bit line bonding region (BLBA) included in each of the cell region (CELL) and peripheral circuit region (PERI), a wiring pattern of the uppermost wiring layer may exist as a dummy pattern, or the uppermost wiring layer may be empty.

[0116] In the external pad bonding region (PA) of the semiconductor device, a lower wiring pattern **373***a* of the same shape as the upper wiring pattern **472***a* of the cell region (CELL) may be formed on the uppermost wiring layer of the peripheral circuit region (PERI), corresponding to upper wiring pattern **472***a* formed on the uppermost wiring layer of the cell region (CELL). The lower wiring pattern **373***a* formed on the uppermost wiring layer of the peripheral circuit region (PERI) may not be connected to a separate contact in the peripheral circuit region (PERI). Similarly, in the external pad bonding region (PA), a upper wiring pattern of the same shape as a lower wiring pattern of the peripheral circuit region (PERI) may be formed on the upper wiring layer of the cell region (CELL), corresponding to the lower wiring pattern formed on the uppermost wiring layer of the peripheral circuit region (PERI).

[0117] The lower bonding pads **371***b*, **372***b* may be formed on the second wiring layer **340***b* of the word line bonding

region (WLBA). In the word line bonding region (WLBA), the lower bonding pads **371***b* and **372***b* of the peripheral circuit region (PERI) may be electrically connected to the upper bonding pads **471***b* and **472***b* of the cell region (CELL) by a bonding method.

[0118] Also, in the bit line bonding region (BLBA), a upper wiring pattern **492** of the same shape as a lower wiring pattern **352** of the peripheral circuit region (PERI) may be formed on the uppermost wiring layer of the cell region (CELL), corresponding to the lower wiring pattern **352** formed on the uppermost wiring layer of the peripheral circuit region (PERI). No contact may be formed on the upper wiring pattern **492** formed on the uppermost wiring layer of the cell region (CELL).

[0119] In some embodiments, a first dummy pattern **300***d* and a second dummy pattern **400***d* may be positioned at an edge of the external pad bonding region (PA). The edge of the external pad bonding region (PA) where the first dummy pattern **300***d* and the second dummy pattern **400***d* are positioned may correspond to the first peripheral area **300**ER of the peripheral circuit chip **300** or the second peripheral area **400**ER of the memory chip **400**.

[0120] FIG. **11** and FIG. **12** illustrates methods of manufacturing the semiconductor device of FIG. **5** by dicing of a wafer-to-wafer structure.

[0121] For convenience, among the wafer-to-wafer structure, only a partial region including the first dummy pattern **100***d* and the second dummy pattern **200***d* is shown in the drawing.

[0122] The semiconductor device manufacturing method includes preparing a first wafer **100'** including a first bonding pad **100***b* and a first dummy pattern **100***d*, preparing a second wafer **200'** including a second bonding pad **200***b* and a second dummy pattern **200***d*, bonding the first wafer **100'** and the second wafer **200'** so that the first bonding pad **100***b* contacts the second bonding pad **200***b* and the first dummy pattern **100***d* contacts the second dummy pattern **200***d*, and laser processing the first wafer **100'** and the second wafer **200'** along between the scribe lane region SL.

[0123] Bonding the first wafer **100'** and the second wafer **200'** may be performed by wafer-to-wafer bonding. For example, bonding the first wafer **100'** and the second wafer **200'** may be performed by placing the first wafer **100'** and the second wafer **200'** so that the first bonding pad **100***b* and the second bonding pad **200***b* face each other and so that the first dummy pattern **100***d* and the second dummy pattern **200***d* face each other. The first wafer **100'** and the second wafer **200'** may then be pressed and annealed. By wafer-to-wafer bonding, the first bonding pad **100***b* may be bonded by contacting the second bonding pad **200***b*, and the first dummy pattern **100***d* may be bonded by contacting the second dummy pattern **200***d*.

[0124] In a wafer-to-wafer structure, the width w**5** of the first dummy pattern **100***d* and the second dummy pattern **200***d* may be about 40 μm. Considering that some of the width (e.g., width w**5**) is removed during laser processing of the first dummy pattern **100***d* and the second dummy pattern **200***d*, it is preferable to control the width w**5** of the first dummy pattern **100***d* and the second dummy pattern **200***d* to the above-mentioned range before laser processing such that sufficient junction force between the dummy patterns.

[0125] In some embodiments, the laser processing of first wafer **100'** and second wafer **200'** may involve laser processing the first wafer **100'** and second wafer **200'** entirely in their thickness direction.

[0126] In laser processing the first wafer **100'** and second wafer **200'**, at least a part of each of the first dummy pattern **100***d* and the second dummy pattern **200***d* is positioned within the scribe lane region SL such that the first dummy pattern **100***d* and the second dummy pattern **200***d* is processed by laser processing. At least a part of each of the first dummy pattern **100***d* and the second dummy pattern **200***d* may be combined after melting in laser processing, and the junction force between the first semiconductor chip **100** and the second semiconductor chip **200** may be improved.

[0127] In laser processing first wafer **100'** and second wafer **200'**, the width w**6** the first wafer **100'** and second wafer **200'** processed with laser may be 20 μm or less. The width w**6** of which the first wafer **100'** and second wafer **200'** are processed with laser corresponds to the widths of which the first dummy pattern **100***d* and the second dummy pattern **200***d* are removed in laser processing. Therefore, after laser processing, a part of the first dummy pattern **100***d* may remain in the first wafer **100'**, and a part of the second dummy pattern **200***d* may remain in the second wafer **200'**. The first dummy pattern **100***d* and the second dummy pattern **200***d* remain in the first semiconductor chip **100** and the second semiconductor chip **200**, respectively, which may further improve the junction force between the first semiconductor chip **100** and the second semiconductor chips **200** in the semiconductor device **1000**A.

[0128] FIG. **13** to FIG. **15** illustrate other methods of manufacturing the semiconductor device of FIG. **5** by dicing of a wafer-to-wafer structure.

[0129] For convenience, in the wafer-to-wafer structure, only a partial region including the first dummy pattern **100***d* and the second dummy pattern **200***d* is shown in the drawing.

[0130] In some embodiments, laser processing the first wafer **100'** and the second wafer **200'** involves laser processing the entire second wafer **200'** in a thickness direction (Z-direction) and further processing a part of the first wafer **100'** in the thickness direction (Z-direction). In some embodiments, it is preferable to perform laser processing at least to a depth where the interface between the first dummy pattern **100***d* and the second dummy pattern **200***d* is positioned, such that the first dummy pattern **100***d* and the second dummy pattern **200***d* are combined after melting. For example, as shown in FIG. **14**, during laser processing, the entire first dummy pattern **100***d* and second dummy pattern **200***d* may be processed in a thickness direction (Z-direction) respectively. In some embodiments, during laser processing, the entire second dummy pattern **200***d* may be processed in the thickness direction (Z-direction), and only a part of the first dummy pattern **100***d* may be processed in the thickness direction (Z-direction).

[0131] In addition, the semiconductor device manufacturing method according to some embodiments further comprises blade processing the remaining part of the first wafer **100'** in the thickness direction (Z-direction). By laser processing only a part of the wafer-to-wafer structure in the thickness direction and blade processing the remaining part, processing time may be reduced, and productivity may be improved.

[0132] The thickness t**5** of which the second wafer **200'** is entirely processed in the thickness direction (Z direction) by laser may be thinner than the thickness t**6** of the first wafer **100'**. By performing laser processing on the second wafer **200'** having a thinner thickness, the time required for laser processing the first dummy pattern **100***d* and the second dummy pattern **200***d* may be reduced.

[0133] Hereinafter, referring to FIG. **16** to FIG. **18**, an example of an electronic system including a semiconductor device described above will be described.

[0134] FIG. **16** is a drawing schematically illustrating an electronic system including a semiconductor device according to some embodiments.

[0135] Referring to FIG. **16**, the electronic system **10000** may include a semiconductor device **1100** and a controller **1200** electrically connected to the semiconductor device **1100**. The electronic system **10000** may be a storage device including one or a plurality of semiconductor devices **1100** or an electronic device including a storage device. For example, the electronic system **10000** may be a solid state drive device (SSD) device, a universal serial bus (USB), a computing system, a medical device, or a communication device, which includes one or plurality of semiconductor devices **1100**.

[0136] The semiconductor device **1100** may be a non-volatile memory device, for example, may be the NAND flash memory device described above referring to FIG. **9**. The semiconductor device **1100** may include a first structure **1100**F and a second structure **1100**S on the first structure **1100**F. The first structure **1100**F may be a peripheral circuit structure including a decoder circuit **1110**, a page buffer **1120**, and a logic circuit **1130**. The second structure **1100**S may be a memory cell structure including a bit line BL, a common source line CSL, a word lines WL, first and second gate upper lines UL**1**, and UL**2**, first and second gate lower lines LL**1**, and LL**2**, and memory cell strings CSTR between the bit line BL and the common source line CSL.

[0137] In the second structure **1100**S, each memory cell string CSTR may include lower transistors LT**1**, and LT**2** adjacent to the common source line CSL, upper transistors UT**1**, and UT**2** adjacent to the bit line BL, and memory cell transistors MCT disposed between the lower transistors LT**1**, and LT**2** and the upper transistors UT**1**, and UT**2**. The number of lower transistors LT**1**, and LT**2** and the number of upper transistors UT**1**, and UT**2** may be varied depending on embodiments.

[0138] In some embodiments, the top transistors UT**1** and UT**2** may include a string select transistor, and the lower transistors LT**1** and LT**2** may include a ground select transistor. The gate lower lines LL**1** and LL**2** may be the gate electrodes of the lower transistors LT**1** and LT**2**, respectively. The word lines WL may be the gate electrodes of memory cell transistors MCT, and the gate upper lines UL**1**, and UL**2** may be the gate electrodes of the upper transistors UT**1** and UT**2**, respectively.

[0139] The common source line CSL, the first and second gate lower lines LL**1** and LL**2**, the word lines WL, the first and second gate upper lines UL**1** and UL**2** may be electrically connected to the decoder circuit **1110** through a first connection wiring **115** that extends from inside of the first structure **1100**F to the second structure **1100**S. The bit lines BL may be electrically connected to the page buffer **1120** through a second connection wirings **1125** that extend from inside of the first structure **1100**F to the second structure **1100**S.

[0140] In the first structure **1100**F, the decoder circuit **1110** and the page buffer **1120** may perform control operations on at least one selection memory cell transistor among the plurality of memory cell transistors MCT. The decoder circuit **1110** and the page buffer **1120** may be controlled by the logic circuit **1130**. The semiconductor device **1100** may communicate with the controller **1200** through the input/output pad **1101** electrically connected to the logic circuit **1130**. The input/output pad **1101** may be electrically connected to the logic circuit **1130** through an input/output connection wiring **1135** that extends from inside of the first structure **1100**F to the second structure **1100**S.

[0141] The controller **1200** may include a processor **1210**, a NAND controller **1220**, and a host interface **1230**. Depending on embodiments, the electronic system **10000** may include a plurality of semiconductor devices **1100**, and in this case, the controller **1200** may control a plurality of semiconductor devices **1100**.

[0142] A processor **1210** may control the overall operation of electronic system **10000**, including the controller **1200**. The processor **1210** may operate according to a predetermined firmware and control the NAND controller **1220** to access the semiconductor device **1100**. The NAND controller **1220** may include a NAND interface **1221** that processes communication with the semiconductor device **1100**. Through the NAND interface **1221**, control instructions for controlling the semiconductor device **1100**, data to be written to the memory cell transistors MCT of the semiconductor device **1100**, data to be read from the memory cell transistors MCT of the semiconductor device **1100**, etc. may be transmitted. The host interface **1230** may provide a communication function between the electronic system **10000** and an external host. When receiving a control instruction from an external host through the host interface **1230**, the processor **1210** may control the semiconductor device **1100** in response to the control instruction.

[0143] FIG. **17** is a perspective view schematically illustrating an electronic system including a semiconductor device according to some embodiments.

[0144] Referring to FIG. **17**, the electronic system **2000** may include a main substrate **2001**, a controller **2002** mounted on the main substrate **2001**, one or more semiconductor packages **2003**, and DRAM **2004**. The semiconductor package **2003** and DRAM **2004** may be connected to the controller **2002** through a wiring pattern **2005** formed on the main substrate **2001**.

[0145] The main substrate **2001** may include a connector **2006** including a plurality of pins to be coupled to the external host. In connector **2006**, the number and arrangement of plurality of pins may vary depending on the communication interface between the electronic system **2000** and the external host. In some embodiments, the electronic system **2000** may communicate with an external host, according to any one of interfaces such as Universal Serial Bus (USB), Peripheral Component Interconnect Express (PCI-Express), Serial Advanced Technology Attachment (SATA), and M-Phy for Universal Flash Storage (UFS) and the like. In some embodiments, the electronic system **2000** may operate by power supplied from an external host through connector **2006**. The electronic system **2000** may further include a PMIC (Power Management Integrated

Circuit) distributing power supplied from the external host to the controller **2002** and the semiconductor package **2003**.

[0146] The controller **2002** may record data in semiconductor package **2003** or read data from semiconductor package **2003**, and may improve the operation speed of the electronic system **2000**.

[0147] DRAM **2004** may be a buffer memory to alleviate the speed difference between the external host and the semiconductor package **2003** which is a data storage space. DRAM **2004** included in the electronic system **2000** may also operate as a kind of cache memory and may provide spaces for temporarily storing data during control operations on the semiconductor package **2003**. In embodiments where the electronic system **2000** includes DRAM **2004**, the controller **2002** may further include a DRAM controller for controlling DRAM **2004** in addition to a NAND controller for controlling semiconductor package **2003**.

[0148] The semiconductor package **2003** may include the first and second semiconductor packages (**2003***a*, **2003***b*) spaced apart from each other. Each of the first and second semiconductor packages (**2003***a*, **2003***b*) may be a semiconductor package including a plurality of semiconductor chips **2200**. Each of the first and second semiconductor packages (**2003***a*, **2003***b*) may include a package substrate **2100**, a semiconductor chip **2200** on the package substrate **2100**, an adhesive layer **2300** disposed on a bottom surface of each semiconductor chip **2200**, a connection structure **2400** electrically connecting connects the semiconductor chip **2200** and the package substrate **2100**, and a molding layer **2500** covering the semiconductor chip **2200** and the connection structure **2400** on the package substrate **2100**.

[0149] The package substrate **2100** may be a printed circuit board (PCB) including a package upper pad **2130**. Each semiconductor chip **2200** may include an input/output pad **2210**. The input/output pad **2210** may corresponds to the input/output pad **1101** of FIG. **16**. Each semiconductor chip **2200** may include a gate stacking structure **3210** and a channel structure **3220**. The semiconductor chip **2200** may include the semiconductor device described with reference to FIG. **9**.

[0150] FIG. **18** is a cross-sectional view schematically illustrating a semiconductor device according to some embodiments.

[0151] Referring to FIG. **18**, in the semiconductor package **2003**A, each of the semiconductor chips **2200***a* may include a semiconductor substrate **4010**, a first structure **4100** on the semiconductor substrate **4010**, and a second structure **4200** junctioned with the first structure **4100** on the first structure **4100** by a wafer bonding method.

[0152] The first structure **4100** may include a peripheral circuit region including peripheral wiring **4110** and the first junction structure **4150**. The second structure **4200** may include a common source line **4205**, a gate stacking structure **4210** between the common source line **4205** and the first structure **4100**, a channel structure **4220** and a separation structure **4230** that penetrate the gate stacking structure **4210**, and second junction structures **4250** respectively electrically connected to the channel structure **4220** and the word line (see 'WL' in FIG. **16**, hereinafter the same) of the gate stacking structure **4210**. For example, the second junction structure **4250** may be respectively electrically connected to the channel structure **4220** and the word line WL through the bit line **4240** electrically connected to the channel structure **4220** and a gate connection wiring electrically connected to the word line WL. The first junction structure **4150** of the first structure **4100** and the second junction structure **4250** of the second structure **4200** may be junctioned with contacting each other. The junction portions of the first junction structure **4150** and the second junction structure **4250** may be formed of copper (Cu), for example.

[0153] In a semiconductor chip **2200***a* or semiconductor device according to some embodiments, a first dummy pattern **4100***d* positioned at an edge of the first structure **4100** to be exposed from a side surface of the first structure **4100**, and a second dummy pattern **4200***d* positioned at an edge of the second structure **4200** to be exposed from a side surface of the first structure **4100** may be formed. Since the first dummy pattern **4100***d* and the second dummy pattern **4200***d* are junctioned with contacting each other, the junction force between the first structure **4100** and the second structure **4200** can be improved.

[0154] Each semiconductor chip **2200***a* may further include an input/output pad **2210** and input/output connection wiring **4265** below the input/output pad **2210**. The input/output connection wiring **4265** may be electrically connected to a part of the second junction structure **4250**.

[0155] In some embodiments, a plurality of semiconductor chips **2200** in semiconductor package **2003** may be electrically connected to each other by the connection structures **2400** such as bonding wire. As another example, the plurality of semiconductor chip **2200** or the plurality of parts of it may be electrically connected by a connection structure including a via electrode.

[0156] Although the embodiments of the present disclosure have been described in detail above, the scope of the present disclosure is not limited thereto, and various modifications and improvements can be made by those skilled in the art using the basic concept of the present disclosure defined in the following claims, and they fall within the scope of the present disclosure.

What is claimed is:

1. A semiconductor device comprising:

a first semiconductor chip comprising a first bonding pad and at least one first dummy pattern; and

a second semiconductor chip positioned on the first semiconductor chip, the second semiconductor chip comprising a second bonding pad and at least one second dummy pattern;

wherein:

the first bonding pad is in contact with the second bonding pad;

the first dummy pattern is in contact with the second dummy pattern;

the first dummy pattern is positioned at an edge of the first semiconductor chip and configured to be exposed from a side surface of the first semiconductor chip; and

the second dummy pattern is positioned at an edge of the second semiconductor chip and configured to be exposed from a side surface of the second semiconductor chip.

2. The semiconductor device of claim **1**, wherein

in at least a part of an interface between the first semiconductor chip and the second semiconductor chip, the first dummy pattern and the second dummy pattern have no boundary.

3. The semiconductor device of claim **1**, wherein

a melting point of the first dummy pattern and the second dummy pattern is equal to or lower than a melting point of the first bonding pad and the second bonding pad.

4. The semiconductor of claim **1**, wherein:

the first dummy pattern is positioned at substantially the same level as the first bonding pad; and

the second dummy pattern is positioned at substantially the same level as the second bonding pad.

5. The semiconductor of claim **1**, wherein:

the first dummy pattern comprises the same material as the first bonding pad; and

the second dummy pattern comprises the same material as the second bonding pad.

6. The semiconductor device of claim **1**, wherein

the first dummy pattern and the second dummy pattern may be positioned continuously along edges of the first semiconductor chip and the second semiconductor chip, respectively.

7. The semiconductor device of claim **1**, wherein

the at least one first dummy pattern and the at least one second dummy pattern may be positioned discontinuously along edges of the first semiconductor chip and the second semiconductor chip, respectively.

8. The semiconductor device of claim **1**, wherein

a width of the first dummy pattern and a width of the second dummy pattern is 7 μm or more and 13 μm or less, respectively.

9. The semiconductor device of claim **1**, wherein

a thickness of the first dummy pattern and a thickness of the second dummy pattern is 5 μm or more, respectively.

10. The semiconductor device of claim **1**, wherein:

the first semiconductor chip further comprises first circuit elements, and first wiring layers electrically connected to the first circuit elements and the first bonding pad, and has a first central region where the first circuit elements, the first wiring layers and the first bonding pad are positioned, and a first peripheral area which surrounds the first central region and where the first dummy pattern is positioned;

the second semiconductor chip further includes second circuit elements, and second wiring layers electrically connected to the second circuit elements and the second bonding pad, and has a second central region where the second circuit elements, the second wiring layers and the second bonding pad are positioned, and a second peripheral area which surrounds the second central region and where the second dummy pattern is positioned; and

a distance between the first dummy pattern and the first central region is 10 μm or more and a distance between the second dummy pattern and the second central region is 10 μm or more.

11. A semiconductor device comprising:

a peripheral circuit chip comprising a plurality of first wiring layers, a plurality of first bonding pads electrically connected to the plurality of first wiring layers, and at least one first dummy pattern; and

a memory chip positioned on the peripheral circuit chip, the memory chip comprising a common source line, a plurality of word lines positioned between the common source line and the peripheral circuit chip, a plurality of channel structures penetrating the plurality of word lines, a plurality of second wiring layers electrically connected to the word lines and the plurality of channel structures, a plurality of second bonding pads electrically connected to the plurality of second wiring layers, and at least one second dummy pattern, wherein:

the plurality of first bonding pads contacts the plurality of second bonding pads;

the first dummy pattern contacts the second dummy pattern;

the first dummy pattern is positioned at an edge of the peripheral circuit chip and configured to be exposed from a side surface of the peripheral circuit chip; and

the second dummy pattern is positioned at an edge of the memory chip and configured to be exposed from a side surface of the memory chip.

12. The semiconductor device of claim **11**, wherein

in at least a part of the interface between the peripheral circuit chip and the memory chip, the first dummy pattern and the second dummy pattern have no boundary.

13. The semiconductor device of claim **11**, wherein:

the peripheral circuit chip has a first central region where the plurality of first wiring layers and the plurality of first bonding pads are positioned, and a first peripheral area which surrounds the first central region and where the first dummy pattern is positioned;

the memory chip has a second central region where the common source line, the plurality of word lines, the plurality of channel structures, the plurality of second wiring layers and the plurality of second bonding pads are positioned, and a second peripheral area which surrounds the second central region and where the second dummy pattern is positioned; and

a distance between the first dummy pattern and the first central region and a distance between the second dummy pattern and the second central region is 10 μm or more, respectively.

14. A semiconductor device manufacturing method, comprising:

preparing a first wafer comprising a first bonding pad and a first dummy pattern;

preparing a second wafer comprising a second bonding pad and a second dummy pattern;

bonding the first wafer and the second wafer so that the first bonding pad contacts the second bonding pad, and the first dummy pattern contacts the second dummy pattern; and

laser processing the first wafer and the second wafer along a scribe lane area,

wherein at least a part of each of the first dummy pattern and the second dummy pattern is positioned in the scribe lane area to be processed by the laser processing.

15. The semiconductor device manufacturing method of claim **14**, wherein

at least a part of each of the first dummy pattern and the second dummy pattern is combined after melting during the laser processing.

16. The semiconductor device manufacturing method of claim **14**, wherein

a part of the first dummy pattern remains in the first wafer, and a part of the second dummy pattern remains in the second wafer, after the laser processing.

17. The semiconductor device manufacturing method of claim **14**, wherein

the first wafer and the second wafer are processed entirely in a direction of thickness of the first wafer and the second wafer during the laser processing.

18. The semiconductor device manufacturing method of claim **14**, wherein:

during the laser processing, the laser processes the first wafer entirely in a thickness direction and further processes a part of the second wafer in the thickness direction; and

the semiconductor device manufacturing method further comprises blade processing a remaining part of the second wafer in the thickness direction.

19. The semiconductor device manufacturing method of claim **18**, wherein

a thickness of the first wafer is smaller than a thickness of the second wafer.

20. The semiconductor device manufacturing method of claim **14**, wherein

during the laser processing, a width of which the first wafer and the second wafer processed by the laser is less than 20 μm.

* * * * *