US012405895B2

(12) **United States Patent**
Vargaftik et al.

(10) **Patent No.: US 12,405,895 B2**
(45) **Date of Patent: Sep. 2, 2025**

(54) **ACCELERATING DATA MESSAGE CLASSIFICATION WITH SMART NICs**

(71) Applicant: **VMware LLC**, Palo Alto, CA (US)

(72) Inventors: **Shay Vargaftik**, Herzliya (IL); **Alex Markuze**, Rosh HaAyin (IL); **Yaniv Ben-Itzhak**, Herzliya (IL); **Igor Golikov**, Herzliya (IL); **Avishay Yanai**, Herzliya (IL)

(73) Assignee: **VMware LLC**, Palo Alto, CA (US)

(*) Notice: Subject to any disclaimer, the term of this patent is extended or adjusted under 35 U.S.C. 154(b) by 0 days.

(21) Appl. No.: **18/437,627**

(22) Filed: **Feb. 9, 2024**

(65) **Prior Publication Data**

US 2024/0184708 A1 Jun. 6, 2024

Related U.S. Application Data

(63) Continuation of application No. 17/845,661, filed on Jun. 21, 2022, now Pat. No. 11,928,062.

(51) **Int. Cl.**
G06F 12/0891 (2016.01)
G06F 13/16 (2006.01)

(52) **U.S. Cl.**
CPC ***G06F 12/0891*** (2013.01); ***G06F 13/1668*** (2013.01); *G06F 2213/0026* (2013.01); *G06F 2213/3808* (2013.01)

(58) **Field of Classification Search**
CPC G06F 12/0891; G06F 13/1668; G06F 2213/0026; G06F 2213/3808; G06F 13/14; G06F 13/38
See application file for complete search history.

(56) **References Cited**

U.S. PATENT DOCUMENTS

5,884,313 A 3/1999 Talluri et al.
5,887,134 A 3/1999 Ebrahim
5,974,547 A 10/1999 Klimenko
6,141,749 A 10/2000 Coss et al.
(Continued)

FOREIGN PATENT DOCUMENTS

CA 2672100 A1 6/2008
CA 2918551 A1 7/2010
(Continued)

OTHER PUBLICATIONS

Angeles, S., Cloud vs. Data Center: What's the Difference?, https://www.businessnewsdaily.com/4982-cloud-vs-data-center.html, Nov. 23, 2018, 1 page.
(Continued)

Primary Examiner — Henry Tsai
Assistant Examiner — Richard B Franklin
(74) *Attorney, Agent, or Firm* — Quarles & Brady LLP

(57) **ABSTRACT**

Some embodiments provide a method for performing data message processing at a smart NIC of a computer that executes a software forwarding element (SFE). The method determines whether a received data message matches an entry in a data message classification cache stored on the smart NIC based on data message classification results of the SFE. When the data message matches an entry, the method determines whether the matched entry is valid by comparing a timestamp of the entry to a set of rules stored on the smart NIC. When the matched entry is valid, the method processes the data message according to the matched entry without providing the data message to the SFE executing on the computer.

20 Claims, 11 Drawing Sheets

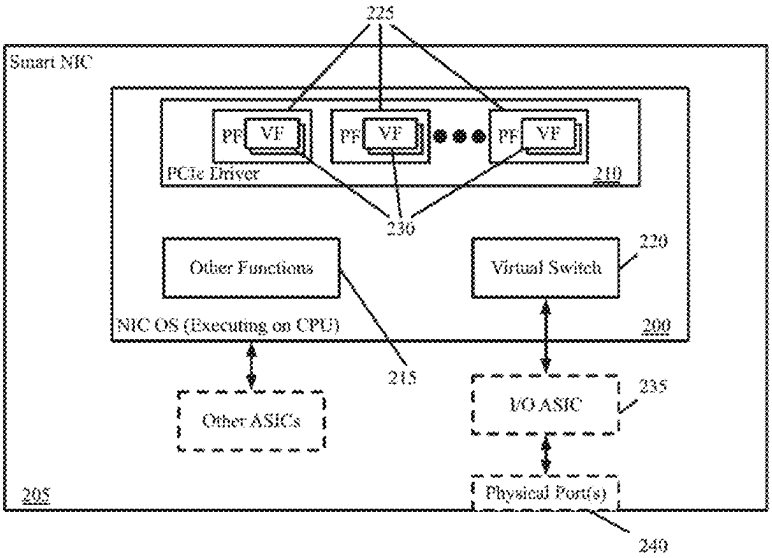

(56) **References Cited**

U.S. PATENT DOCUMENTS

6,219,699 B1 4/2001 McCloghrie et al.
6,393,483 B1 5/2002 Latif et al.
6,496,935 B1 12/2002 Fink et al.
6,594,704 B1 7/2003 Birenback et al.
6,738,821 B1 5/2004 Wilson et al.
6,856,995 B1 2/2005 Ibitayo et al.
6,880,089 B1 4/2005 Bommareddy et al.
6,963,921 B1 11/2005 Yang et al.
7,055,173 B1 5/2006 Chaganty et al.
7,079,544 B2 7/2006 Wakayama et al.
7,136,926 B1 11/2006 Tyer et al.
7,349,382 B2 3/2008 Marimuthu et al.
7,424,710 B1 9/2008 Nelson et al.
7,512,071 B2 3/2009 Goldschmidt et al.
7,606,260 B2 10/2009 Oguchi et al.
7,760,733 B1 7/2010 Eiriksson et al.
7,774,502 B2 8/2010 Murthy et al.
7,818,452 B2 10/2010 Matthews et al.
7,849,168 B2 12/2010 Utsunomiya et al.
7,853,998 B2 12/2010 Blaisdell et al.
7,913,294 B1 3/2011 Maufer et al.
7,948,986 B1 5/2011 Ghosh et al.
8,032,933 B2 10/2011 Turley et al.
8,108,550 B2 1/2012 Lahoti et al.
8,145,768 B1 3/2012 Hawthorne
8,190,767 B1 5/2012 Maufer et al.
8,194,674 B1 6/2012 Pagel et al.
8,365,294 B2 1/2013 Ross
8,442,059 B1 5/2013 Iglesia et al.
8,615,009 B1 12/2013 Ramamoorthi et al.
8,660,129 B1 2/2014 Brendel et al.
8,825,900 B1 9/2014 Gross, IV et al.
8,856,518 B2 10/2014 Sridharan et al.
8,930,529 B1 1/2015 Wang et al.
8,931,047 B2 1/2015 Wanser et al.
9,008,082 B2 4/2015 Dyke
9,008,085 B2 4/2015 Kamble et al.
9,015,823 B2 4/2015 Koponen et al.
9,047,109 B1 6/2015 Wang et al.
9,116,727 B2 8/2015 Benny et al.
9,135,044 B2 9/2015 Maharana
9,143,582 B2 9/2015 Banavalikar et al.
9,148,895 B2 9/2015 PalChaudhuri et al.
9,152,593 B2 10/2015 Galles
9,154,327 B1 10/2015 Marino et al.
9,197,551 B2 11/2015 DeCusatis et al.
9,231,849 B2 1/2016 Hyoudou et al.
9,325,739 B1 4/2016 Roth et al.
9,378,161 B1 6/2016 Dalal et al.
9,380,027 B1 6/2016 Lian et al.
9,419,897 B2 8/2016 Cherian et al.
9,460,031 B1 10/2016 Dalal et al.
9,621,516 B2 4/2017 Basak et al.
9,634,990 B2 4/2017 Lee
9,692,698 B2 6/2017 Cherian et al.
9,729,512 B2 8/2017 Jain et al.
9,755,903 B2 9/2017 Masurekar et al.
9,806,948 B2 10/2017 Masurekar et al.
9,825,913 B2 11/2017 Jain et al.
9,916,269 B1 3/2018 Machulsky et al.
10,050,884 B1 8/2018 Dhanabalan et al.
10,142,127 B2 11/2018 Cherian et al.
10,162,793 B1 12/2018 BShara et al.
10,193,771 B2 1/2019 Koponen et al.
10,284,478 B2 5/2019 Yokota
10,341,296 B2 7/2019 Bhagwat et al.
10,534,629 B1 1/2020 Pierre et al.
10,567,308 B1 2/2020 Subbiah et al.
10,873,566 B2 12/2020 Han
10,997,106 B1 5/2021 Bandaru et al.
11,005,755 B2 5/2021 Yu et al.
11,019,030 B2 5/2021 Jain et al.
11,038,845 B2 6/2021 Han
11,108,593 B2 8/2021 Cherian et al.
11,221,972 B1 1/2022 Raman et al.
11,385,981 B1 7/2022 Silakov et al.
11,593,278 B2 2/2023 Kim et al.
11,606,310 B2 3/2023 Ang et al.
11,636,053 B2 4/2023 Kim et al.
11,677,719 B2 6/2023 Han
11,716,383 B2 8/2023 Kim et al.
2002/0069245 A1 6/2002 Kim
2003/0005144 A1 1/2003 Engel et al.
2003/0093481 A1 5/2003 Mitchell et al.
2003/0097589 A1 5/2003 Syvanne
2003/0123452 A1 7/2003 Cox et al.
2003/0130833 A1 7/2003 Brownell et al.
2003/0140124 A1 7/2003 Burns
2003/0145114 A1 7/2003 Gertner
2003/0161272 A1 8/2003 Teplitsky
2003/0200290 A1 10/2003 Zimmerman et al.
2003/0212900 A1 11/2003 Liu et al.
2003/0217119 A1 11/2003 Raman et al.
2004/0022259 A1 2/2004 Tuchow
2004/0049701 A1 3/2004 Pennec et al.
2005/0053079 A1 3/2005 Havala
2005/0114337 A1 5/2005 Lunteren
2005/0198125 A1 9/2005 Beck et al.
2005/0229246 A1 10/2005 Rajagopal et al.
2005/0238022 A1 10/2005 Panigrahy
2006/0002386 A1 1/2006 Yik et al.
2006/0029056 A1 2/2006 Perera et al.
2006/0041894 A1 2/2006 Cheng et al.
2006/0191003 A1 8/2006 Bahk et al.
2006/0206603 A1 9/2006 Rajan et al.
2006/0206655 A1 9/2006 Chappell et al.
2006/0236054 A1 10/2006 Kitamura
2007/0011734 A1 1/2007 Balakrishnan et al.
2007/0056038 A1 3/2007 Lok
2007/0061492 A1 3/2007 Riel
2007/0174850 A1 7/2007 Zur
2008/0008202 A1 1/2008 Terrell et al.
2008/0028097 A1 1/2008 Makela
2008/0072305 A1 3/2008 Casado et al.
2008/0086620 A1 4/2008 Morris
2008/0163207 A1 7/2008 Reumann et al.
2008/0267177 A1 10/2008 Johnson et al.
2008/0289028 A1 11/2008 Jansen et al.
2008/0298274 A1 12/2008 Takashige et al.
2009/0007251 A1 1/2009 Abzarian et al.
2009/0089537 A1 4/2009 Vick et al.
2009/0119087 A1 5/2009 Ang et al.
2009/0129271 A1 5/2009 Ramankutly et al.
2009/0129394 A1 5/2009 Bar-Kovetz et al.
2009/0150521 A1 6/2009 Tripathi
2009/0161547 A1 6/2009 Riddle et al.
2009/0161673 A1 6/2009 Breslau et al.
2009/0235325 A1 9/2009 Dimitrakos et al.
2009/0249470 A1 10/2009 Litvin et al.
2009/0249472 A1 10/2009 Litvin et al.
2009/0327781 A1 12/2009 Tripathi
2010/0014526 A1 1/2010 Chavan et al.
2010/0037311 A1 2/2010 He et al.
2010/0070677 A1 3/2010 Thakkar
2010/0100616 A1 4/2010 Bryson et al.
2010/0115174 A1 5/2010 Akyol et al.
2010/0115208 A1 5/2010 Logan
2010/0125667 A1 5/2010 Soundararajan
2010/0165874 A1 7/2010 Brown et al.
2010/0257580 A1 10/2010 Zhao
2010/0275199 A1 10/2010 Smith et al.
2010/0287306 A1 11/2010 Matsuda
2011/0016467 A1 1/2011 Kane
2011/0022695 A1 1/2011 Dalal et al.
2011/0060859 A1 3/2011 Shukla et al.
2011/0072486 A1 3/2011 Hadar et al.
2011/0103259 A1 5/2011 Aybay et al.
2011/0113467 A1 5/2011 Agarwal et al.
2011/0134920 A1 6/2011 Dyke
2011/0219170 A1 9/2011 Frost et al.
2011/0225647 A1 9/2011 Dilley et al.
2011/0246637 A1 10/2011 Murakami
2012/0042138 A1 2/2012 Eguchi et al.
2012/0072909 A1 3/2012 Malik et al.

(56) **References Cited**

U.S. PATENT DOCUMENTS

2012/0079478 A1 3/2012 Galles et al.
2012/0096459 A1 4/2012 Miyazaki
2012/0163388 A1 6/2012 Goel et al.
2012/0167082 A1 6/2012 Kumar et al.
2012/0207039 A1 8/2012 Srinivasan et al.
2012/0207174 A1 8/2012 Shieh
2012/0240182 A1 9/2012 Narayanaswamy et al.
2012/0259953 A1 10/2012 Gertner
2012/0278584 A1 11/2012 Nagami et al.
2012/0290703 A1 11/2012 Barabash et al.
2012/0320918 A1 12/2012 Fomin et al.
2013/0007740 A1 1/2013 Kikuchi et al.
2013/0033993 A1 2/2013 Cardona et al.
2013/0044631 A1 2/2013 Biswas et al.
2013/0058346 A1 3/2013 Sridharan et al.
2013/0061047 A1 3/2013 Sridharan et al.
2013/0073702 A1 3/2013 Umbehocker
2013/0073743 A1 3/2013 Ramasamy et al.
2013/0125122 A1 5/2013 Hansen
2013/0125230 A1 5/2013 Koponen et al.
2013/0145106 A1 6/2013 Kan
2013/0163594 A1 6/2013 Sharma et al.
2013/0227097 A1 8/2013 Yasuda et al.
2013/0227550 A1 8/2013 Weinstein et al.
2013/0265883 A1 10/2013 Henry et al.
2013/0311663 A1 11/2013 Kamath et al.
2013/0318219 A1 11/2013 Kancherla
2013/0318268 A1 11/2013 Dalal et al.
2013/0332983 A1 12/2013 Koorevaar et al.
2013/0346583 A1 12/2013 Low et al.
2014/0003442 A1 1/2014 Hernandez et al.
2014/0056151 A1 2/2014 Petrus et al.
2014/0067763 A1 3/2014 Jorapurkar et al.
2014/0068602 A1 3/2014 Gember et al.
2014/0074799 A1 3/2014 Karampuri et al.
2014/0098815 A1 4/2014 Mishra et al.
2014/0115578 A1 4/2014 Cooper et al.
2014/0123211 A1 5/2014 Wanser et al.
2014/0164595 A1 6/2014 Bray et al.
2014/0195666 A1 7/2014 Dumitriu et al.
2014/0201305 A1 7/2014 Dalal et al.
2014/0208075 A1 7/2014 McCormick, Jr.
2014/0215036 A1 7/2014 Elzur
2014/0244983 A1 8/2014 McDonald et al.
2014/0245296 A1 8/2014 Sethuramalingam et al.
2014/0245423 A1 8/2014 Lee
2014/0269712 A1 9/2014 Kidambi
2014/0269754 A1 9/2014 Eguchi et al.
2014/0281030 A1 9/2014 Cui et al.
2014/0282855 A1 9/2014 Clark et al.
2014/0330977 A1 11/2014 Bemmel
2014/0373148 A1 12/2014 Nelms et al.
2014/0376367 A1 12/2014 Jain et al.
2015/0007317 A1 1/2015 Jain
2015/0016300 A1 1/2015 Devireddy et al.
2015/0019748 A1 1/2015 Gross, IV et al.
2015/0020067 A1 1/2015 Brant et al.
2015/0033222 A1 1/2015 Hussain et al.
2015/0052280 A1 2/2015 Lawson
2015/0082417 A1 3/2015 Bhagwat et al.
2015/0117445 A1 4/2015 Koponen et al.
2015/0156250 A1 6/2015 Varshney et al.
2015/0172183 A1 6/2015 DeCusatis et al.
2015/0200808 A1 7/2015 Gourlay et al.
2015/0212892 A1 7/2015 Li et al.
2015/0215207 A1 7/2015 Qin et al.
2015/0222547 A1 8/2015 Hayut et al.
2015/0237013 A1 8/2015 Bansal et al.
2015/0242134 A1 8/2015 Takada et al.
2015/0261556 A1 9/2015 Jain et al.
2015/0261720 A1 9/2015 Kagan et al.
2015/0281178 A1 10/2015 Raman et al.
2015/0281179 A1 10/2015 Raman et al.
2015/0326532 A1 11/2015 Grant et al.
2015/0347231 A1 12/2015 Gopal et al.
2015/0358288 A1 12/2015 Jain et al.
2015/0358290 A1 12/2015 Jain et al.
2015/0381494 A1 12/2015 Cherian et al.
2015/0381495 A1 12/2015 Cherian et al.
2016/0006696 A1 1/2016 Donley et al.
2016/0092108 A1 3/2016 Karaje et al.
2016/0134702 A1 5/2016 Gertner
2016/0142320 A1 5/2016 Gyllenhammer et al.
2016/0156591 A1 6/2016 Zhou et al.
2016/0162302 A1 6/2016 Warszawski et al.
2016/0162438 A1 6/2016 Hussain et al.
2016/0179579 A1 6/2016 Armann et al.
2016/0182342 A1 6/2016 Singaravelu et al.
2016/0239330 A1 8/2016 Bride et al.
2016/0285913 A1 9/2016 Itskin et al.
2016/0294858 A1 10/2016 Woolward et al.
2016/0306648 A1 10/2016 Deguillard et al.
2017/0005986 A1 1/2017 Bansal et al.
2017/0024334 A1 1/2017 Bergsten et al.
2017/0075845 A1 3/2017 Kopparthi
2017/0093623 A1 3/2017 Zheng
2017/0099532 A1 4/2017 Kakande
2017/0104790 A1 4/2017 Meyers et al.
2017/0118173 A1 4/2017 Arramreddy et al.
2017/0134433 A1 5/2017 Hugenbruch et al.
2017/0161090 A1 6/2017 Kodama
2017/0161189 A1 6/2017 Gertner
2017/0180273 A1 6/2017 Daly et al.
2017/0180414 A1 6/2017 Andrews et al.
2017/0187679 A1 6/2017 Basak et al.
2017/0195454 A1 7/2017 Shieh
2017/0208100 A1 7/2017 Lian et al.
2017/0214549 A1 7/2017 Yoshino et al.
2017/0244671 A1 8/2017 Kamalakantha et al.
2017/0244673 A1 8/2017 Han
2017/0244674 A1 8/2017 Han
2017/0264622 A1 9/2017 Cooper et al.
2017/0295033 A1 10/2017 Cherian et al.
2018/0024775 A1 1/2018 Miller
2018/0024964 A1 1/2018 Mao et al.
2018/0032249 A1 2/2018 Makhervaks et al.
2018/0088978 A1 3/2018 Li et al.
2018/0095872 A1 4/2018 Dreier et al.
2018/0097778 A1 4/2018 Jain et al.
2018/0109471 A1 4/2018 Chang et al.
2018/0152540 A1 5/2018 Niell et al.
2018/0260125 A1 9/2018 Botes et al.
2018/0262599 A1 9/2018 Firestone
2018/0278684 A1 9/2018 Rashid et al.
2018/0309641 A1 10/2018 Wang et al.
2018/0309718 A1 10/2018 Zuo
2018/0329743 A1 11/2018 Pope et al.
2018/0331976 A1 11/2018 Pope et al.
2018/0336346 A1 11/2018 Guenther
2018/0337991 A1 11/2018 Kumar et al.
2018/0349037 A1 12/2018 Zhao et al.
2018/0359215 A1 12/2018 Khare et al.
2019/0042506 A1 2/2019 Devey et al.
2019/0044809 A1 2/2019 Willis et al.
2019/0044866 A1 2/2019 Chilikin et al.
2019/0075063 A1 3/2019 McDonnell et al.
2019/0132296 A1 5/2019 Jiang et al.
2019/0158396 A1 5/2019 Yu et al.
2019/0173689 A1 6/2019 Cherian et al.
2019/0200105 A1 6/2019 Cheng et al.
2019/0235909 A1 8/2019 Jin et al.
2019/0278675 A1 9/2019 Bolkhovitin et al.
2019/0280980 A1 9/2019 Hyoudou
2019/0286373 A1 9/2019 Karumbunathan et al.
2019/0306083 A1 10/2019 Shih et al.
2020/0021532 A1 1/2020 Borikar et al.
2020/0028800 A1 1/2020 Strathman et al.
2020/0042234 A1 2/2020 Krasner et al.
2020/0042389 A1 2/2020 Kukarni et al.
2020/0042412 A1 2/2020 Kukarni et al.
2020/0133909 A1 4/2020 Hefty et al.
2020/0136996 A1 4/2020 Li et al.
2020/0213227 A1 7/2020 Pianigiani et al.
2020/0259731 A1 8/2020 Sivaraman et al.

(56) **References Cited**

U.S. PATENT DOCUMENTS

2020/0278892	A1	9/2020	Nainar et al.
2020/0278893	A1	9/2020	Niell et al.
2020/0314011	A1	10/2020	Deval et al.
2020/0319812	A1	10/2020	He et al.
2020/0328192	A1	10/2020	Zaman et al.
2020/0382329	A1	12/2020	Yuan
2020/0401320	A1	12/2020	Pyati et al.
2020/0412659	A1	12/2020	Ilitzky et al.
2021/0019270	A1	1/2021	Li et al.
2021/0026670	A1	1/2021	Krivenok et al.
2021/0058342	A1	2/2021	McBrearty
2021/0176212	A1	6/2021	Han
2021/0226846	A1	7/2021	Ballard et al.
2021/0232528	A1	7/2021	Kutch et al.
2021/0266259	A1	8/2021	Renner, III et al.
2021/0273911	A1	9/2021	Jain et al.
2021/0314232	A1	10/2021	Nainar et al.
2021/0357242	A1	11/2021	Ballard et al.
2021/0377166	A1	12/2021	Brar et al.
2021/0377188	A1	12/2021	Ghag et al.
2021/0392017	A1	12/2021	Cherian et al.
2021/0409317	A1	12/2021	Seshan et al.
2022/0027147	A1	1/2022	Maddukuri et al.
2022/0043572	A1	2/2022	Said et al.
2022/0100432	A1	3/2022	Kim et al.
2022/0100491	A1	3/2022	Voltz et al.
2022/0100542	A1	3/2022	Voltz
2022/0100544	A1	3/2022	Voltz
2022/0100545	A1	3/2022	Cherian et al.
2022/0100546	A1	3/2022	Cherian et al.
2022/0103478	A1	3/2022	Ang et al.
2022/0103487	A1	3/2022	Ang et al.
2022/0103488	A1	3/2022	Wang et al.
2022/0103490	A1	3/2022	Kim et al.
2022/0103629	A1	3/2022	Cherian et al.
2022/0150055	A1	5/2022	Cui et al.
2022/0164451	A1	5/2022	Bagwell
2022/0197681	A1	6/2022	Rajagopal
2022/0206908	A1	6/2022	Brar et al.
2022/0206962	A1	6/2022	Kim et al.
2022/0206964	A1	6/2022	Kim et al.
2022/0210229	A1	6/2022	Maddukuri et al.
2022/0231968	A1	7/2022	Rajagopal
2022/0272039	A1	8/2022	Cardona et al.
2022/0335563	A1	10/2022	Elzur
2023/0004508	A1	1/2023	Liu et al.
2023/0195488	A1	6/2023	Ang et al.
2023/0195675	A1	6/2023	Ang et al.
2023/0198833	A1	6/2023	Ang et al.
2023/0291709	A1	9/2023	Han
2023/0370428	A1	11/2023	Jain et al.
2023/0385094	A1	11/2023	Markuze et al.
2023/0409225	A1	12/2023	Markuze et al.
2023/0409243	A1	12/2023	Markuze et al.
2023/0409488	A1	12/2023	Vargaftik et al.

FOREIGN PATENT DOCUMENTS

CN	101258725	A	9/2008
CN	101540826	A	9/2009
EP	1482711	A2	12/2004
EP	3598291	A1	1/2020
EP	4160424	A2	4/2023
WO	2005099201	A2	10/2005
WO	2007036372	A1	4/2007
WO	2008095010	A1	8/2008
WO	2010008984	A2	1/2010
WO	2015187201	A1	12/2015
WO	2016003489	A1	1/2016
WO	2021030020	A1	2/2021
WO	2022066270	A1	3/2022
WO	2023121720	A1	6/2023
WO	2023249748	A1	12/2023

OTHER PUBLICATIONS

Anwer, M. et al., Building a Fast, Virtualized Data Plane with Programmable Hardware, VISA '09, Barcelona, Spain, Aug. 17, 2009, 8 pages.

Author Unknown, Transparent, Free On-Line Dictionary of Computing (FOLDOC), http://foldoc.org/transparent, Jun. 6, 1996, 1 page.

Author Unknown, Network Functions Virtualisation; Infrastructure Architecture; Architecture of the Hypervisor Domain, Draft ETSI GS NFV-INF 004 V0.3.1, France, May 2014, 50 pages.

Author Unkown, What is End-to-End Encryption and How Does it Work?, Proton Technologies AG, Geneva, Switzerland, Mar. 7, 2018, 4 pages.

Author Unknown, Middlebox, Wikipedia.com, Nov. 19, 2019, 1 page.

Author Unknown, An Introduction to SmartNICs, The Next Platform, https://www.nextplatform.com/2019/03/04/an-introduction-to-smartnics/, Mar. 4, 2019, 4 pages.

Author Unknown, In-Hardware Storage Virtualization—NVMe SNAP(TM) Revolutionizes Data Center Storage: Composable Storage Made Simple, Mellanox Technologies, Sunnyvale, CA, USA, 2019, 3 pages.

Author Unknown, vSAN Planning and Deployment, Update 3, VMware, Inc., Aug. 20, 2019, 85 pages.

Author Unknown, Hypervisor, VMware.com, Aug. 13, 2020, 1 page.

Author Unknown, 8.6 Receive-Side Scaling (RSS), Red Hat, Inc., 2020, 2 pages.

Author Unknown, Package Manager, Wikipedia, Sep. 8, 2020, 10 pages.

Author Unknown, VMDK, Wikipedia, May 17, 2020, 3 pages.

Author Unkown, vSphere Managed Inventory Objects, https://docs.vmware.com/en/VMware-vSphere/6.7/com.vmware.vsphere.vcenterhost.doc/GUID-4D4B3DF2-D033-4782-A030-3C3600DE5A7F.html, VMware, Inc., Aug. 3, 2020, 3 pages.

Author Unknown, AppLogic Features, 3TERA, Inc., Jul. 2007, 2 pages.

Author Unknown, Next-Generation Firewalls, Palo Alto Networks, 2013, 1 page.

Basak, D. et al., Virtualizing Networking and Security in the Cloud, ACM SIGOPS Operating Systems Review, 2010, 44(4):86-94.

Casado, M. et al., SANE: A Protection Architecture for Enterprise Networks, Proceedings of the 15th USENIX Security Symposium, Jul. 31-Aug. 4, 2006, 15 pages.

CISCO Systems, Inc., CISCO Identity-Based Firewall Security, 2011, 2 pages.

Cisco, Enabling Service Chaining on Cisco Nexus 1000V Series, 2012, 25 pages.

Dixon, C. et al., An End to the Middle, Proceedings of the 12th Conference on Hot Topics in Operating Systems, USENIX Association, May 2009, 5 pages.

Doyle, L., An Introduction to Smart NICs and Their Benefits, https://www.techtargeet.com/searchnetworking/tip/An-introduction-to-smart-NICs-and-their-benefits, Jul. 2019, 2 pages.

Grant, S. et al., SmartNIC Performance Isolation with FairNIC: Programmable Networking for the Cloud, SIGCOMM '20, ACM, Virtual Event, USA, Aug. 10-14, 2020, 13 pages.

Guichard, J. et al., Network Service Chaining Problem Statement, IETF Network Working Group, Jun. 13, 2013, 14 pages.

Harris, J., Accelerating NVME-oF* for VMs with the Storage Performance Development Kit, Flash Memory Summit, Intel Corporation, Santa Clara, CA, Aug. 2017, 18 pages.

Herbert, T. et al., Scaling in the Linux Networking Stack, https://www.kernel.org/doc/Documentation/networking/scaling.txt, Jun. 2, 2020, 9 pages.

Ioannidis, S. et al., Implementing a Distributed Firewall, CCS '00, ACM, 2000, 10 pages.

Joseph, D. et al., A Policy-Aware Switching Layer for Data Centers, Electrical Engineering and Computer Sciences, University of California at Berkeley, Technical Report No. UCB/EECS-2008-82, Jun. 24, 2008, 26 pages.

(56) **References Cited**

OTHER PUBLICATIONS

Koponen, T. et al., Network Virtualization in Multi-Tenant Datacenters, Technical Report TR-2013-001E, VMware, Inc., Palo Alto, CA, USA, Aug. 2013, 22 pages.
Levasseur, J. et al., Standardized but Flexible I/O for Self-Virtualizing Devices, Space, 2008, 13(11), 7 pages.
Li, J. et al., DrawerPipe: A Reconfigurable Pipeline for Network Processing on FGPA-Based SmartNIC, Electronics, 2020, 9:59, pp. 1-24.
Litvak, M., Linux—IP-RULE(8): Routing Policy Database Management, https://man7.org/linux/man-pages/man8/ip-rule.8.html, Apr. 10, 2014, 5 pages.
Liu, M. et al., Offloading Distributed Applications onto SmartNICs Using iPipe, SIGCOMM '19, ACM, Beijing, China, Aug. 19-23, 2019, pp. 318-333.
Mohammadkhan, A. et al., P4NFV: P4 Enabled NFV Systems with SmartNICs, 2019 IEEE Conference on Network Function Virtualization and Software Defined Networks (NFV-SDN), Nov. 12-14, 2019, 7 pages.
Olds, D., OS Virtualization vs. Hypervisor: Why You Should Offer Both, www.techtarget.com, Oct. 19, 2008, 3 pages.
Pagiamtzis, K. et al., Content-Addressable Memory (CAM) Circuits and Architectures: A Tutorial and Survey, IEEE Journal of Solid-State Circuits, 2006, 41(3):712-727.
Perlroth, N., What is End-to-End Encryption? Another Bull's-Eye on Big Tech, The New York Times, https://www.nytimes.com/2019/11/19/technology/end-to-end-encryption.html, Nov. 19, 2019, 4 pages.
Peterson, L. et al., OS Support for General-Purpose Routers, In Proceedings of the Seventh Workshop on Hot Topics in Operating Systems, IEEE, 1999, pp. 38-43.
Pettit, J. et al., Virtual Switching in an Era of Advanced Edges, In Proc. 2nd Workshop on Data Center—Converged and Virtual Ethernet Switching (DCCAVES), vol. 22, ITC, Sep. 2010, 7 pages.
Scarfone, K., et al., Guidelines on Firewalls and Firewall Policy: Recommendations of the National Institute of Standards and Technology, Special Publication 800-41, Revision 1, NIST, U.S. Department of Commerce, 2009, 48 pages.
Sekar, V. et al., Design and Implementation of a Consolidated Middlebox Architecture, 9th USENIX Symposium on Networked Systems Design and Implementation, Apr. 25-27, 2012, 14 pages.
Sherry, J. et al., Making Middleboxes Someone Else's Problem: Network Processing as a Cloud Service, SIGCOMM '12, Aug. 13-17, 2012, 12 pages.
Spalink, T. et al., Building a Robust Software-Based Router Using Network Processors, ACM SIGOPS Operating Systems Review, 2001, 35(5):216-229.
Stojanovski, N. et al., Analysis of Identity Based Firewall Systems, Jun. 2010, 9 pages.
Stojanovski, N. et al., Architecture of a Identity Based Firewall System, Jul. 2011, 9 pages.
Stringer, J. et al., OVS Hardware Offloads Discussion Panel, http://openvswitch.org/support/ovscon2016/7/1450-stringer.pdf, Nov. 7, 2016 37 pages.
Suarez, J., Reduce TCO with Arm Based SmartNICs, https://community.arm.com/arm-community-blogs/b/architectures-and-processors-blog/posts/reduce-tco-with-arm-based-smartnics, Nov. 14, 2019, 12 pages.
Turner, J. et al., Supercharging PlanetLab—A High Performance, Multi-Application, Overlay Network Platform, ACM SIGCOMM Computer Communication Review, 2007, 37(4):85-96.

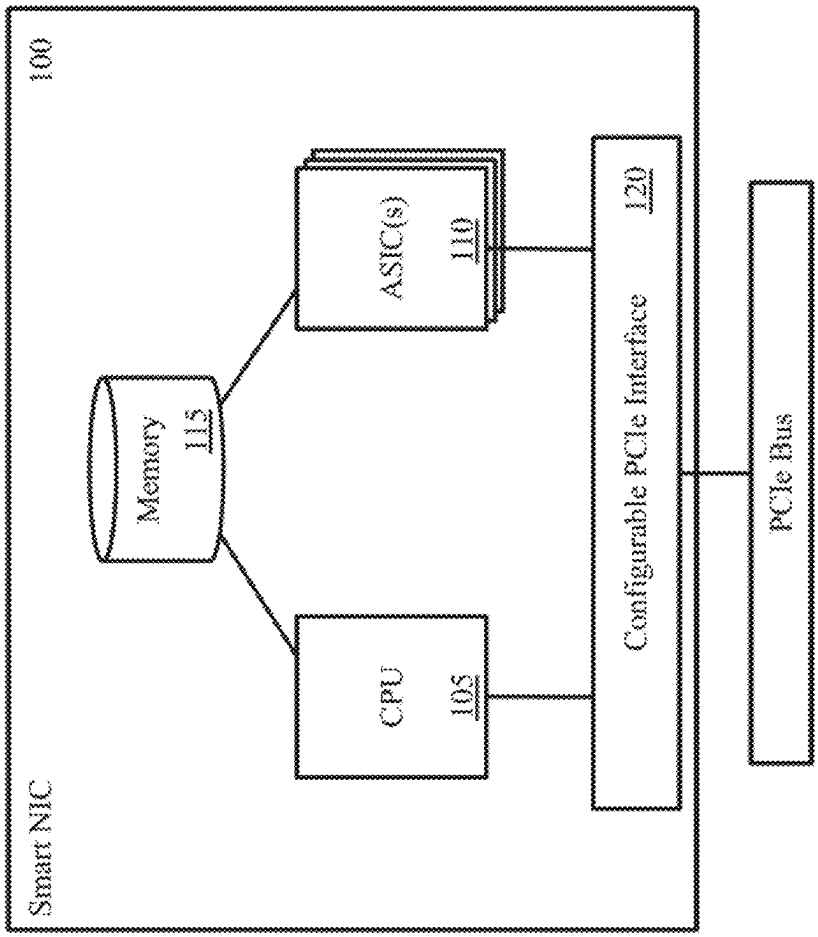
100
Smart NIC
Memory
115
CPU
105
ASIC(s)
110
Configurable PCIe Interface
120
PCIe Bus

Figure 1

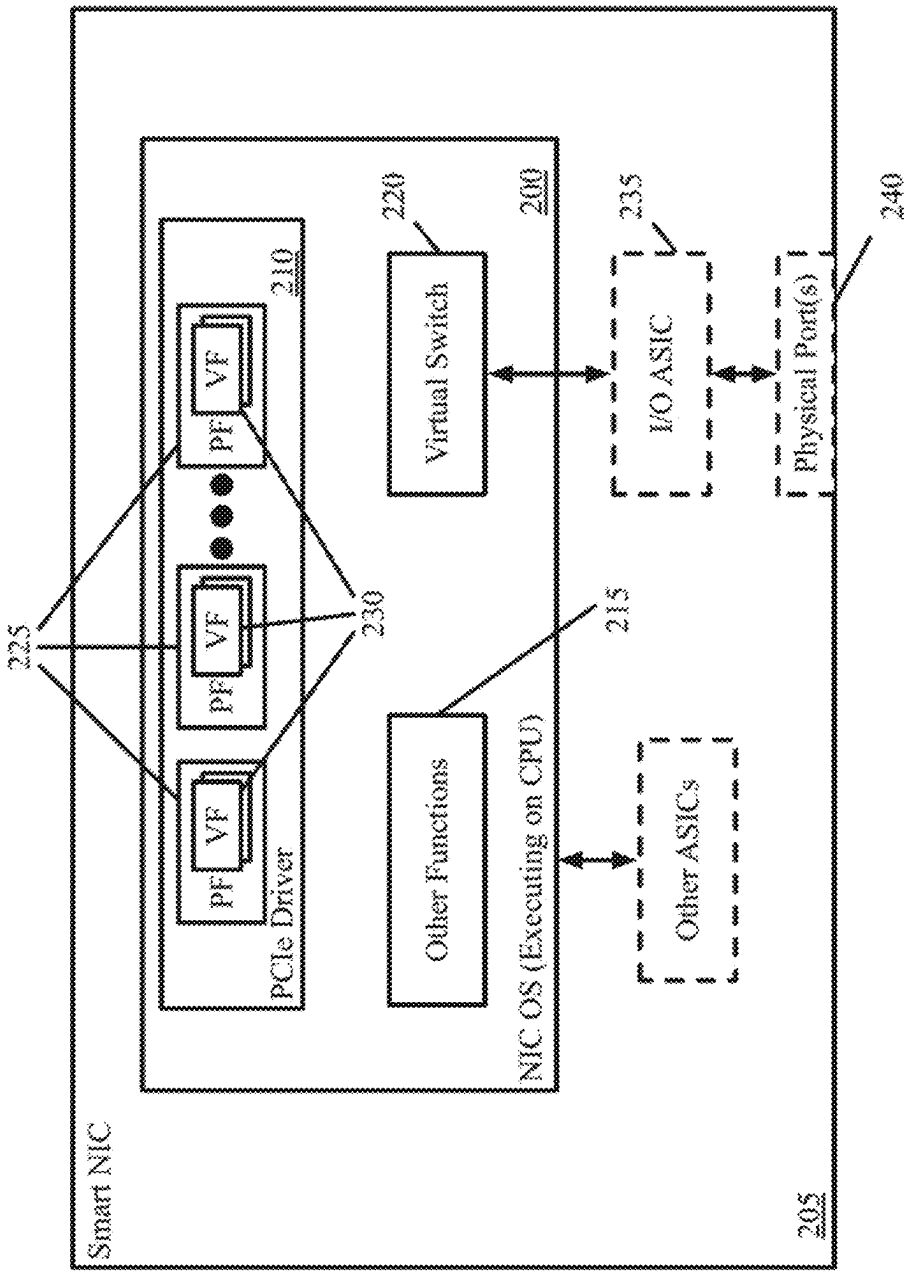
Smart NIC
205
NIC OS (Executing on CPU)
200
PCIe Driver
210
PF
VF
PF
VF
PF
VF
225
230
Virtual Switch
220
Other Functions
215
I/O ASIC
235
Other ASICs
Physical Port(s)
240

Figure 2

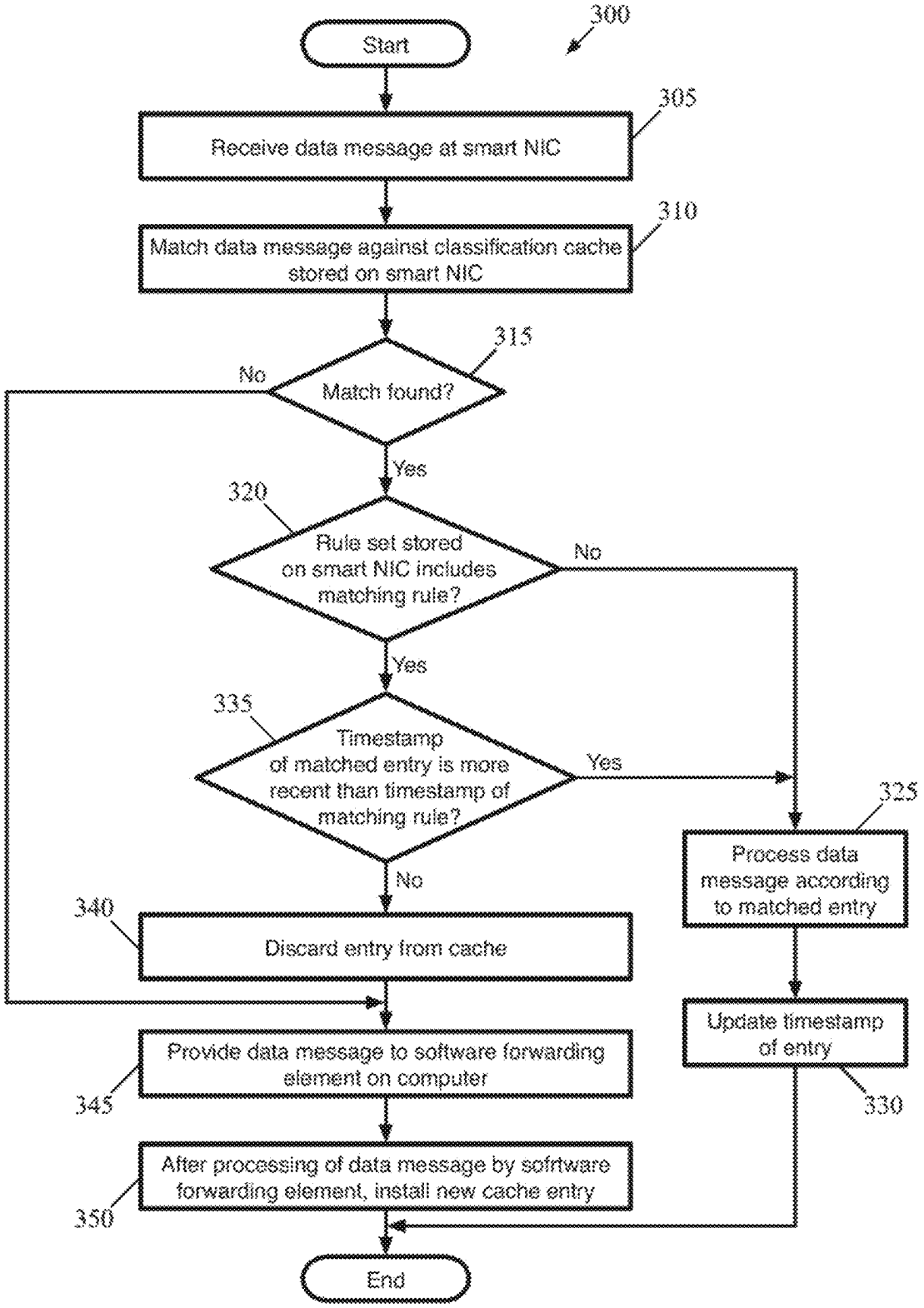
300
Start
305
Receive data message at smart NIC
310
Match data message against classification cache stored on smart NIC
315
Match found?
No
Yes
320
Rule set stored on smart NIC includes matching rule?
No
Yes
335
Timestamp of matched entry is more recent than timestamp of matching rule?
Yes
No
325
Process data message according to matched entry
340
Discard entry from cache
Update timestamp of entry
Provide data message to software forwarding element on computer
345
330
After processing of data message by sofrtware forwarding element, install new cache entry
350
End

Figure 3

Figure 4

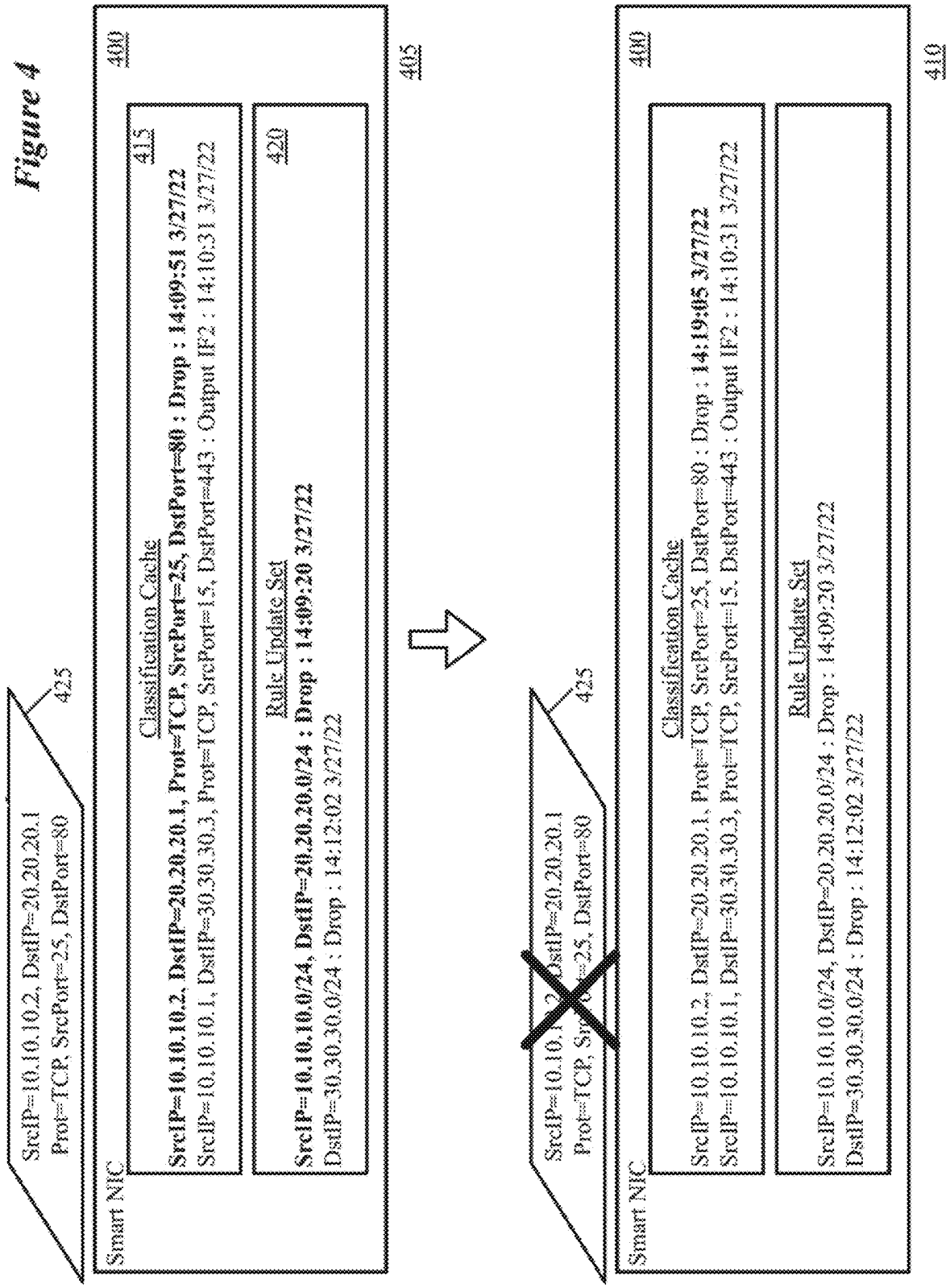
SrcIP=10.10.10.2, DstIP=20.20.20.1
Prot=TCP, SrcPort=25, DstPort=80
425
Smart NIC
400
Classification Cache
415
SrcIP=10.10.10.2, DstIP=20.20.20.1, Prot=TCP, SrcPort=25, DstPort=80 : Drop : 14:09:51 3/27/22
SrcIP=10.10.10.1, DstIP=30.30.30.3, Prot=TCP, SrcPort=15, DstPort=443 : Output IF2 : 14:10:31 3/27/22
Rule Update Set
420
SrcIP=10.10.10.0/24, DstIP=20.20.20.0/24 : Drop : 14:09:20 3/27/22
DstIP=30.30.30.0/24 : Drop : 14:12:02 3/27/22
405
SrcIP=10.10.10.2, DstIP=20.20.20.1
Prot=TCP, SrcPort=25, DstPort=80
425
Smart NIC
400
Classification Cache
SrcIP=10.10.10.2, DstIP=20.20.20.1, Prot=TCP, SrcPort=25, DstPort=80 : Drop : 14:19:05 3/27/22
SrcIP=10.10.10.1, DstIP=30.30.30.3, Prot=TCP, SrcPort=15, DstPort=443 : Output IF2 : 14:10:31 3/27/22
Rule Update Set
SrcIP=10.10.10.0/24, DstIP=20.20.20.0/24 : Drop : 14:09:20 3/27/22
DstIP=30.30.30.0/24 : Drop : 14:12:02 3/27/22
410

Figure 5A

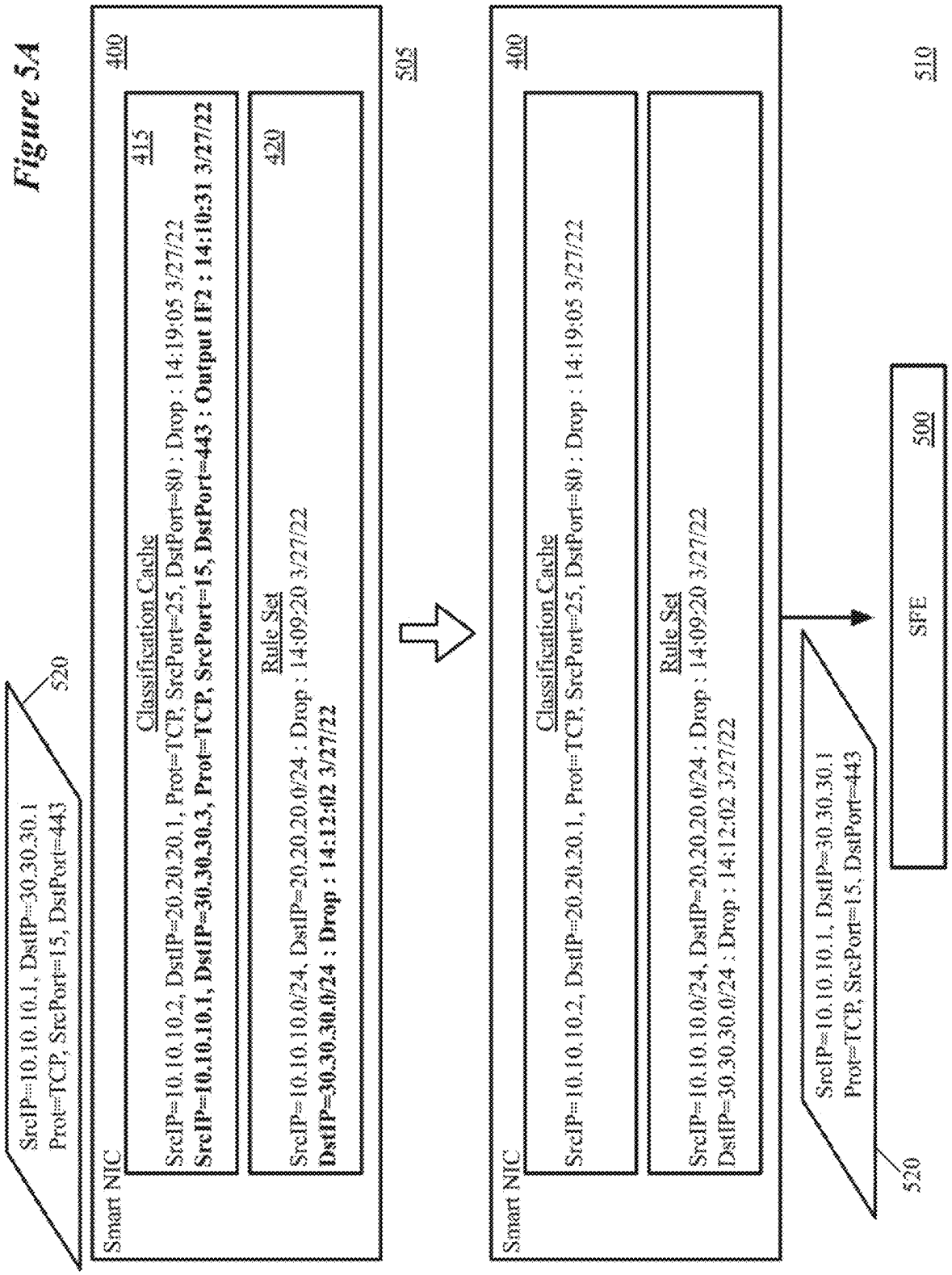
SrcIP=10.10.10.1, DstIP=30.30.30.1
Prot=TCP, SrcPort=15, DstPort=443
520
Smart NIC
400
Classification Cache
415
SrcIP=10.10.10.2, DstIP=20.20.20.1, Prot=TCP, SrcPort=25, DstPort=80 : Drop : 14:19:05 3/27/22
SrcIP=10.10.10.1, DstIP=30.30.30.3, Prot=TCP, SrcPort=15, DstPort=443 : Output IF2 : 14:10:31 3/27/22
Rule Set
420
SrcIP=10.10.10.0/24, DstIP=20.20.20.0/24 : Drop : 14:09:20 3/27/22
DstIP=30.30.30.0/24 : Drop : 14:12:02 3/27/22
505
Smart NIC
400
Classification Cache
SrcIP=10.10.10.2, DstIP=20.20.20.1, Prot=TCP, SrcPort=25, DstPort=80 : Drop : 14:19:05 3/27/22
Rule Set
SrcIP=10.10.10.0/24, DstIP=20.20.20.0/24 : Drop : 14:09:20 3/27/22
DstIP=30.30.30.0/24 : Drop : 14:12:02 3/27/22
SrcIP=10.10.10.1, DstIP=30.30.30.1
Prot=TCP, SrcPort=15, DstPort=443
520
SFE
500
510

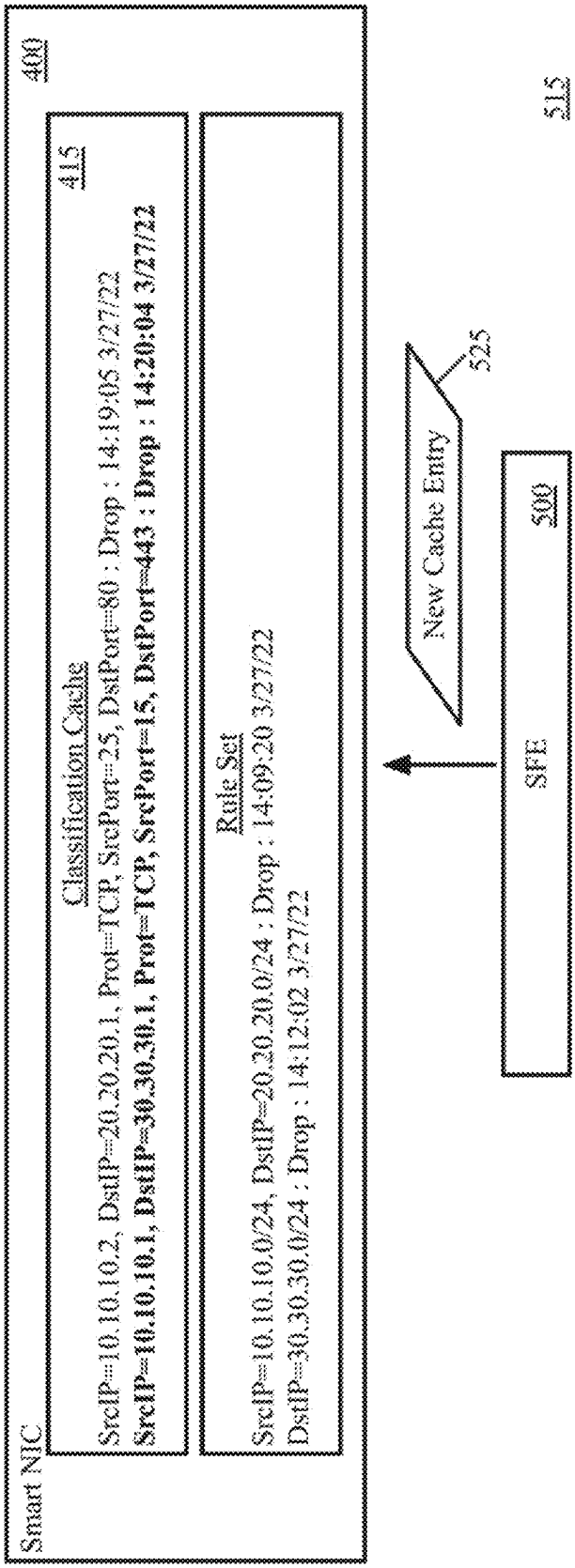

515

Figure 5B

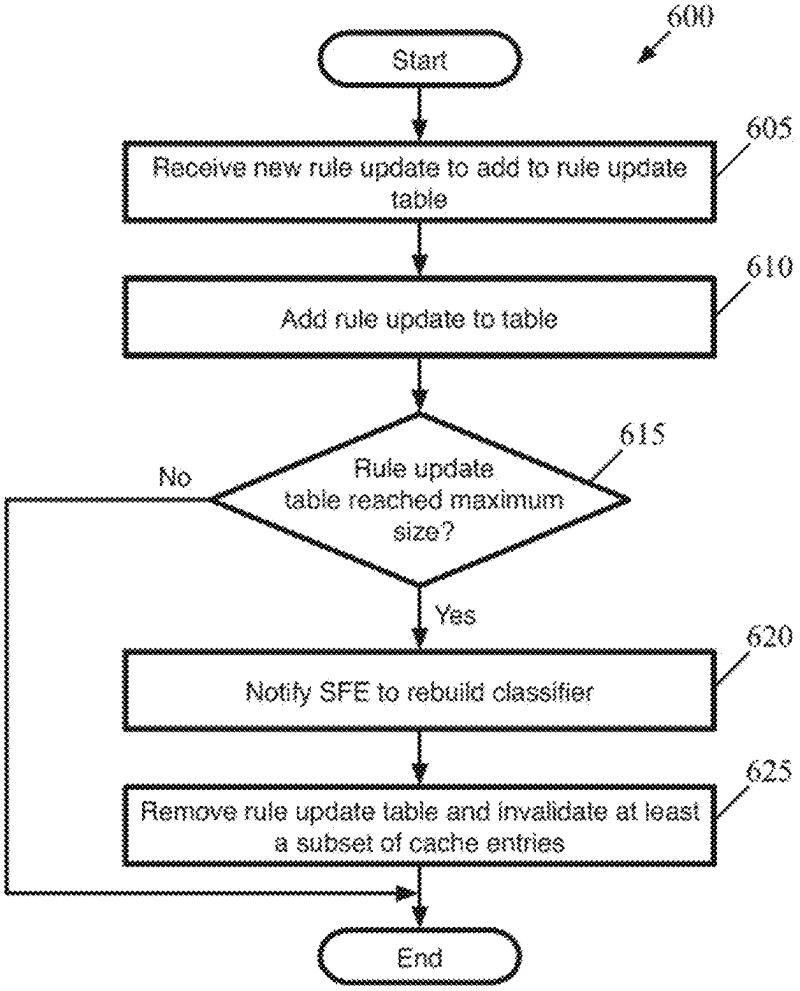
600
Start
605
Receive new rule update to add to rule update table
610
Add rule update to table
615
Rule update table reached maximum size?
No
Yes
620
Notify SFE to rebuild classifier
625
Remove rule update table and invalidate at least a subset of cache entries
End

Figure 6

Time = 14:30:00 3/27/22

Smart NIC 700

Classification Cache 1 (Creation 14:20:00 3/27/22) 705

SrcIP=10.10.10.2, DstIP=20.20.20.1, Prot=TCP, SrcPort=25, DstPort=80 : Drop : 14:20:05 3/27/22
SrcIP=10.10.10.1, DstIP=30.30.30.3, Prot=TCP, SrcPort=15, DstPort=443 : Output IF1 : 14:23:46 3/27/22
SrcIP=10.10.10.3, DstIP=30.30.30.3, Prot=TCP, SrcPort=84, DstPort=443 : Output IF1 : 14:26:34 3/27/22
SrcIP=10.10.20.1, DstIP=40.40.40.1, Prot=UDP, SrcPort=17, DstPort=80 : Output IF2 : 14:29:13 3/27/22

Classification Cache 2 (Creation 14:25:00 3/27/22) 710

SrcIP=10.10.10.1, DstIP=30.30.30.3, Prot=TCP, SrcPort=15, DstPort=443 : Output IF1 : 14:25:46 3/27/22
SrcIP=10.10.10.3, DstIP=30.30.30.3, Prot=TCP, SrcPort=84, DstPort=443 : Output IF1 : 14:26:37 3/27/22
SrcIP=10.10.20.1, DstIP=40.40.40.1, Prot=UDP, SrcPort=17, DstPort=80 : Output IF2 : 14:29:33 3/27/22
SrcIP=10.10.20.3, DstIP=20.20.20.2, Prot=TCP, SrcPort=14, DstPort=443 : Output IF1 : 14:29:53 3/27/22

Rule Update Set 715

SrcIP=10.10.10.0/24, DstIP=20.20.20.0/24 : Drop : 14:23:20 3/27/22
DstIP=20.20.20.1 : Drop : 14:28:02 3/27/22
DstIP=50.50.50.0/24 : Output IF3 : 14:29:45 3/27/22

Figure 7A

700
Smart NIC
Time = 14:30:05 3/27/22
Classification Cache 2 (Creation 14:25:00 3/27/22)
710
SrcIP=10.10.10.1, DstIP=30.30.30.3, Prot=TCP, SrcPort=15, DstPort=443 : Output IF1 : 14:25:46 3/27/22
SrcIP=10.10.10.3, DstIP=30.30.30.3, Prot=TCP, SrcPort=84, DstPort=443 : Output IF1 : 14:26:37 3/27/22
SrcIP=10.10.20.1, DstIP=40.40.40.1, Prot=UDP, SrcPort=17, DstPort=80 : Output IF2 : 14:29:33 3/27/22
SrcIP=10.10.20.3, DstIP=20.20.20.2, Prot=TCP, SrcPort=14, DstPort=443 : Output IF1 : 14:29:53 3/27/22
Classification Cache 3 (Creation 14:30:00 3/27/22)
720
Rule Update Set
715
SrcIP=10.10.10.0/24, DstIP=20.20.20.0/24 : Drop : 14:23:20 3/27/22
DstIP=20.20.20.1 : Drop : 14:28:02 3/27/22
DstIP=50.50.50.0/24 : Output IF3 : 14:29:45 3/27/22

Figure 7B

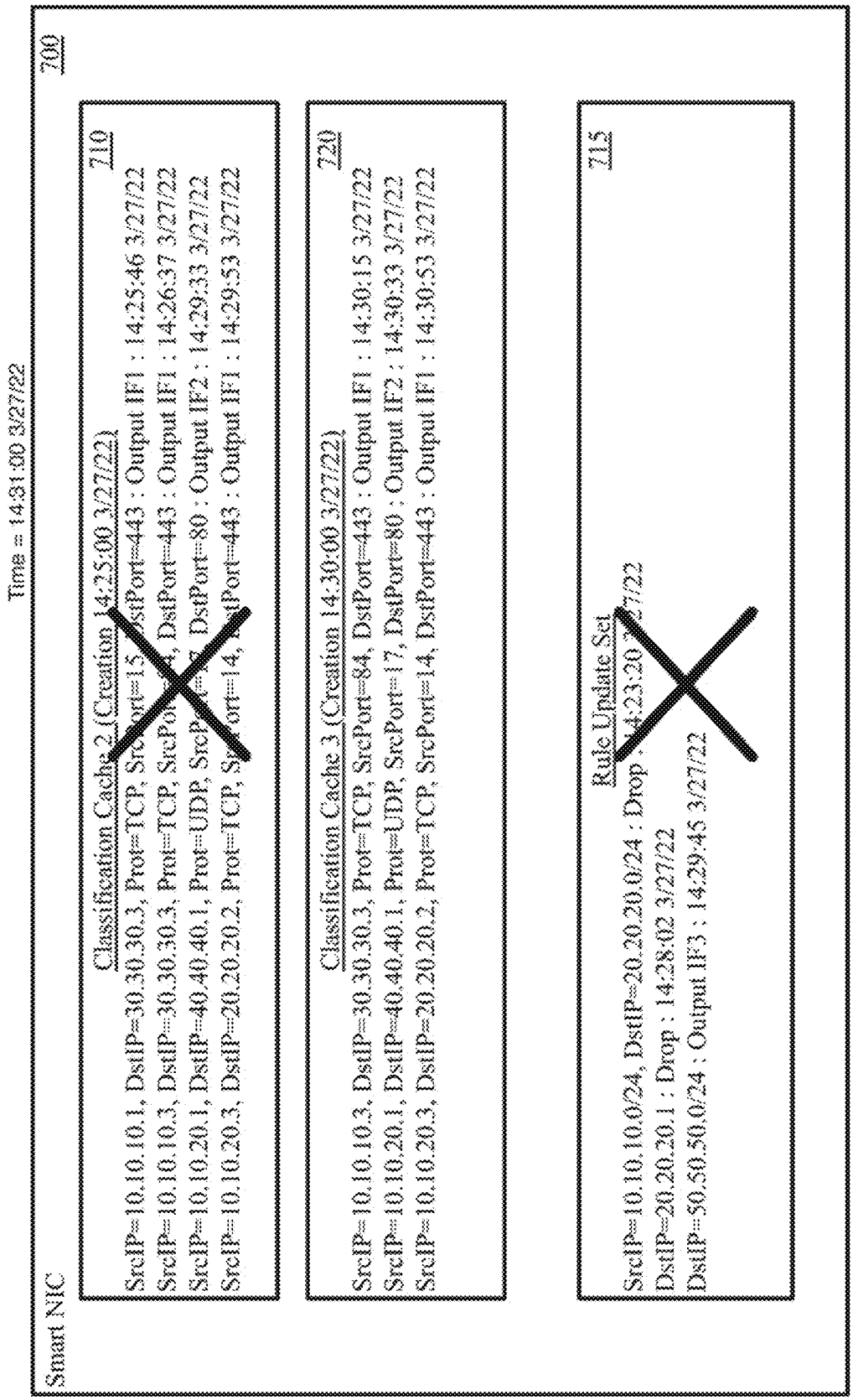
700
Smart NIC
Time = 14:31:00 3/27/22
710
Classification Cache 2 (Creation 14:25:00 3/27/22)
SrcIP=10.10.10.1, DstIP=30.30.30.3, Prot=TCP, SrcPort=15, DstPort=443 : Output IF1 : 14:25:46 3/27/22
SrcIP=10.10.10.3, DstIP=30.30.30.3, Prot=TCP, SrcPort=4, DstPort=443 : Output IF1 : 14:26:37 3/27/22
SrcIP=10.10.20.1, DstIP=40.40.40.1, Prot=UDP, SrcPort=3, DstPort=80 : Output IF2 : 14:29:33 3/27/22
SrcIP=10.10.20.3, DstIP=20.20.20.2, Prot=TCP, SrcPort=14, DstPort=443 : Output IF1 : 14:29:53 3/27/22
720
Classification Cache 3 (Creation 14:30:00 3/27/22)
SrcIP=10.10.10.3, DstIP=30.30.30.3, Prot=TCP, SrcPort=84, DstPort=443 : Output IF1 : 14:30:15 3/27/22
SrcIP=10.10.20.1, DstIP=40.40.40.1, Prot=UDP, SrcPort=17, DstPort=80 : Output IF2 : 14:30:33 3/27/22
SrcIP=10.10.20.3, DstIP=20.20.20.2, Prot=TCP, SrcPort=14, DstPort=443 : Output IF1 : 14:30:53 3/27/22
715
Rule Update Set
SrcIP=10.10.10.0/24, DstIP=20.20.20.0/24 : Drop : 14:23:20 3/27/22
DstIP=20.20.20.1 : Drop : 14:28:02 3/27/22
DstIP=50.50.50.0/24 : Output IF3 : 14:29:45 3/27/22

Figure 7C

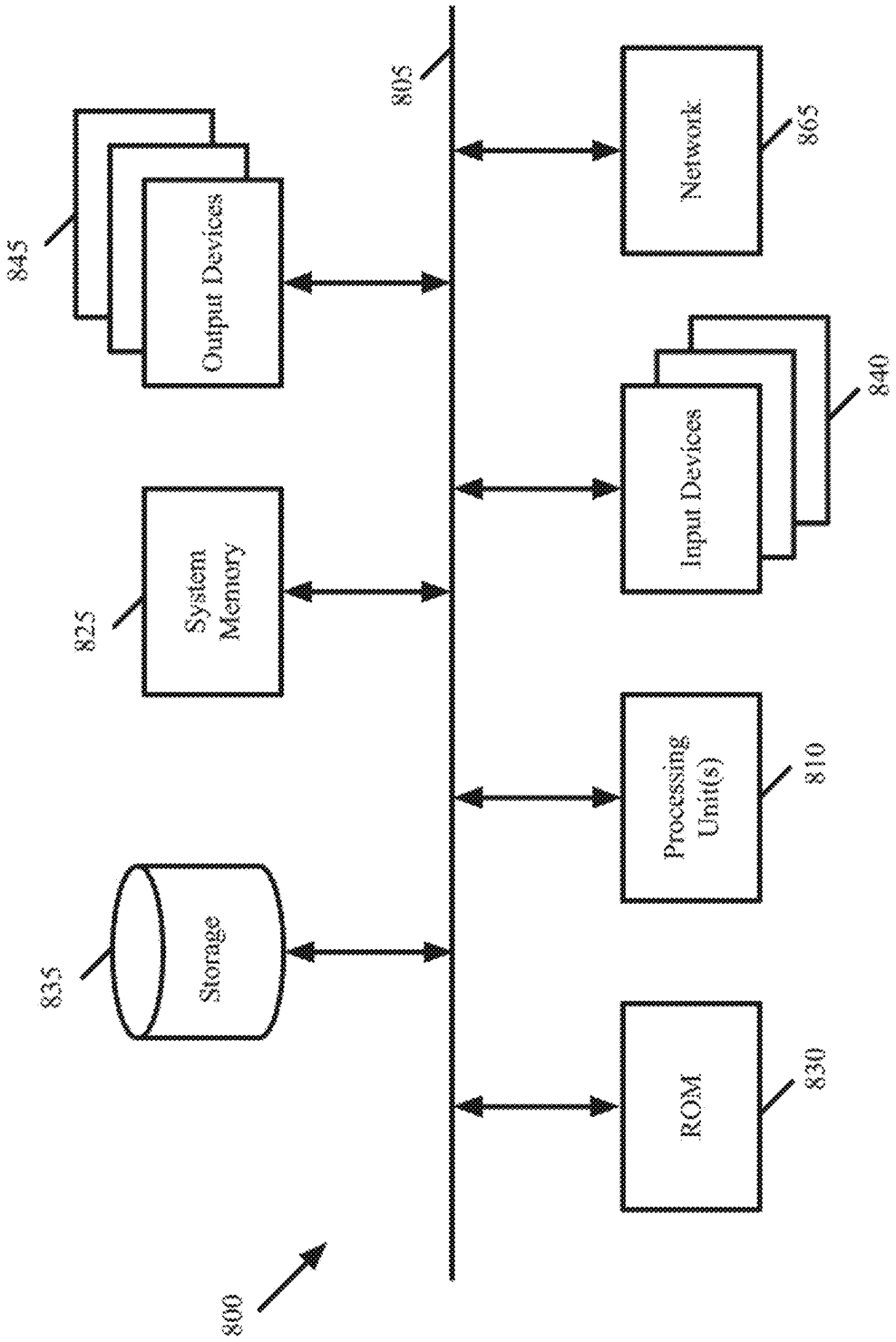
800
805
845
Output Devices
825
System Memory
835
Storage
Network
865
Input Devices
840
Processing Unit(s)
810
ROM
830

Figure 8

ACCELERATING DATA MESSAGE CLASSIFICATION WITH SMART NICs

CROSS-REFERENCE TO RELATED APPLICATION

This application is a continuation of U.S. patent application Ser. No. 17/845,661 filed on Jun. 21, 2022, the disclosure of which is incorporated by reference herein.

BACKGROUND

Especially in the datacenter context, programmable smart network interface controllers (NICs) are becoming more commonplace. These smart NICs typically include a central processing unit (CPU), possibly in addition to one or more application-specific integrated circuits (ASICs) or field-programmable gate arrays (FPGAs). These ASICs (or FPGAs) can be designed for packet processing as well as other uses. However, the inclusion of the CPU also allows for more configurability of the smart NICs, thereby enabling the offloading of some tasks from software of a host computer.

BRIEF SUMMARY

Some embodiments provide a method for using a smart NIC to perform a subset of data message processing at a computer that executes a software forwarding element (SFE). The smart NIC stores a small data message classification cache that is regularly updated based on data message processing at the SFE. When the smart NIC receives a data message for processing by the SFE, the smart NIC initially determines (i) whether the data message matches any entries in its data message classification cache and (ii) if so, whether the matched entry is valid. If the matched entry is a valid entry, the smart NIC processes the data message according to the actions specified by that entry without providing the data message to the SFE executing on the host computer.

In some embodiments, the SFE populates the data message classification cache with entries based on the processing results of the SFE. That is, when a data message is passed to the SFE, the SFE processes the data message to arrive at a processing result specifying a set of actions (e.g., to modify specific headers of the data message, to provide the data message to a data compute node executing on the computer, to forward the data message to a particular output interface, etc.). The SFE provides a cache entry to the smart NIC indicating (i) a set of match conditions for data messages belonging to the same data message flow as that processed data message (e.g., a 5-tuple indicating source and destination network addresses, source and destination transport layer ports, and transport layer protocol) and (ii) the set of actions for the smart NIC to perform on these subsequent data messages. When subsequent data messages belonging to that data message flow are received at the smart NIC, the smart NIC can process these data messages according to the cache entry without requiring the slower processing by the SFE.

As noted, in some embodiments, in addition to determining whether a received data message matches any of the cache entries, the smart NIC also determines whether a matched entry is valid. The data message processing rules used by the forwarding element may be modified (e.g., rules can be deleted, new rules can be added, etc.) in real-time based on, e.g., updates from a network controller. In some embodiments, the most recently updated rules are stored in

a set of rules on the smart NIC with timestamps indicating the time the rule was updated. When a rule is updated at the SFE, the SFE provides this rule update to the smart NIC rule set along with a timestamp indicating the time that the rule was changed.

In addition, the cache entries stored at the smart NIC have timestamps. These timestamps can be the time the cache entry was created or the time the cache entry was last matched and validated, in different embodiments. When a cache entry is matched, the smart NIC identifies whether there are any rules in the rule set that are matched by the data message. If no recent rule is found in the rule set for the data message, then the cache entry is assumed to be valid, and the action(s) specified by the cache entry can be taken by the smart NIC. However, if a rule exists in the rule set for the data message, the timestamp of that rule is compared to the matched cache entry. If the timestamp of the matched cache entry is more recent than the rule, then the cache entry is validated, and the action(s) specified by the cache entry can be taken by the smart NIC.

If the timestamp of the matched cache entry is older than the rule, however, then the cache entry is invalid (because it was created based on processing rules at the SFE at least one of which is no longer in force). For instance, if a rule is identified as having been deleted more recently than the cache entry, the cache entry might have been generated based in part on that deleted rule. If a rule is identified as having been added more recently than the cache entry, then the cache entry would not have been generated based on that new rule and therefore might specify incorrect actions to be taken on the data message.

As such, if the timestamp of the matched cache entry is older than the rule, the smart NIC discards the cache entry and passes the data message to the SFE for processing as though there was a cache miss. The SFE processes the data message and provides a new cache entry to the smart NIC for the smart NIC to add to its cache.

In some embodiments, the cache stored on the smart NIC is relatively small. In certain contexts, when the SFE primarily processes data messages for a small number of large data message flows, the primary savings realized by using the smart NIC comes from having cache entries for these large data message flows so that the many data messages belonging to these flows do not need to be passed on for processing by the SFE.

Because the cache is relatively small, once the cache has reached a fixed maximum size, some embodiments evict entries from the cache when new entries are added. Some embodiments utilize a least recently used (LRU) metric or LRU approximation metric to determine which cache entry to evict when a new cache entry is added. Specifically, some embodiments update the timestamps for the cache entries each time a cache entry is matched and then use these timestamps to identify the LRU entry (i.e., the entry with the earliest timestamp). However, updating the timestamps with every received data message and keeping track of the earliest timestamp can be computationally expensive.

Instead, some embodiments store a separate field that is used to approximate the LRU entry. This separate field attempts to identify the oldest timestamp but is updated in a lazy manner. When a cache entry needs to be evicted, the cache entry identified as having the oldest timestamp is chosen and evicted from the cache. If this cache entry is still needed because the flow is ongoing, the system is self-correcting, as the cache entry will be reinstalled after the next data message in the flow is processed by the SFE.

The rule update table stored on the smart NIC is also size-limited in some embodiments. However, rule updates cannot be simply evicted from the table in the same manner as the cache entries without sacrificing accuracy. Instead, some embodiments regularly clear out both the rule update table and the cache. In different embodiments, the smart NIC clears out the rule update table and cache at regular time intervals or when the rule update table reaches a prespecified size.

In some embodiments, when the smart NIC clears out the rule update table, the SFE rebuilds its data message processing (classifier) data structure (e.g., a set of decision trees, a set of hash tables, etc.). These rules are utilized by the SFE to process data messages prior to their incorporation into the classifier data structure, but at regular intervals (or when enough new rule updates have been received) the SFE rebuilds the classifier so that the faster data message processing enabled by the classifier incorporates these rule updates.

Because the rule updates are no longer stored on the smart NIC to be used for validation of cache entries, the cache entries need to be invalidated to ensure that data messages are not processed using entries based on out-of-date rules. Some embodiments search through the timestamps of the cache entries to identify entries that are newer than any of the rule updates. However, this check is computationally expensive (requiring analysis of all of the timestamps) and it is often easier to rebuild the cache (typically only one data message for each cache entry that is still in use will need to be processed by the SFE in order to regenerate the cache entry).

Some embodiments use a set of multiple caches in order to avoid invalidating all of the cache entries. Specifically, at regular intervals (that are shorter than the time between cache invalidations due to rule update table removal), the smart NIC creates a new cache and releases (deletes) the oldest cache. When data messages arrive, the smart NIC uses any of a number of different algorithms (e.g., round robin, randomization, etc.) to select which of the current caches is queried. If no cache entry is found for a data message, the data message is sent to the SFE for processing and a cache entry for that data message flow will then be installed in the selected cache. As a result, the most common data message flows will have entries in all of the caches. The timing of the new cache creation is such that when the classifier is rebuilt and the rule update table removed, the newest cache is more recent than the last rule update and therefore this cache does not need to be invalidated. Even if this cache is not completely updated, it will typically include entries for the most common data message flows and therefore still be useful.

The preceding Summary is intended to serve as a brief introduction to some embodiments of the invention. It is not meant to be an introduction or overview of all inventive subject matter disclosed in this document. The Detailed Description that follows and the Drawings that are referred to in the Detailed Description will further describe the embodiments described in the Summary as well as other embodiments. Accordingly, to understand all the embodiments described by this document, a full review of the Summary, Detailed Description and the Drawings is needed. Moreover, the claimed subject matters are not to be limited by the illustrative details in the Summary, Detailed Description, and the Drawings, but rather are to be defined by the appended claims, because the claimed subject matters can be embodied in other specific forms without departing from the spirit of the subject matters.

BRIEF DESCRIPTION OF THE DRAWINGS

The novel features of the invention are set forth in the appended claims. However, for purpose of explanation, several embodiments of the invention are set forth in the following figures.

FIG. **1** conceptually illustrates the hardware of a smart NIC of some embodiments that can be configured to perform data message processing using a cache with entries generated by a software forwarding element executing on the computer for which the smart NIC is the interface.

FIG. **2** conceptually illustrates the NIC OS of a smart NIC of some embodiments.

FIG. **3** conceptually illustrates a process for processing a data message received at a smart NIC.

FIG. **4** conceptually illustrates an example of a smart NIC processing a data message according to a valid cache entry.

FIGS. **5**A-**5**B conceptually illustrate an example of a smart NIC identifying that a data message matches an out-of-date cache entry and providing the data message to an SFE for processing.

FIG. **6** conceptually illustrates a process of some embodiments for deleting the rules in the rule update table and correspondingly invalidating a cache.

FIGS. **7**A-C conceptually illustrate the use of sliding window caches such that a cache with valid entries remains when a rule update table is deleted.

FIG. **8** conceptually illustrates an electronic system with which some embodiments of the invention are implemented.

DETAILED DESCRIPTION

In the following detailed description of the invention, numerous details, examples, and embodiments of the invention are set forth and described. However, it will be clear and apparent to one skilled in the art that the invention is not limited to the embodiments set forth and that the invention may be practiced without some of the specific details and examples discussed.

Some embodiments provide a method for using a smart NIC to perform a subset of data message processing at a computer that executes a software forwarding element (SFE). The smart NIC stores a small data message classification cache that is regularly updated based on data message processing at the SFE. When the smart NIC receives a data message for processing by the SFE, the smart NIC initially determines (i) whether the data message matches any entries in its data message classification cache and (ii) if so, whether the matched entry is valid. If the matched entry is a valid entry, the smart NIC processes the data message according to the actions specified by that entry without providing the data message to the SFE executing on the host computer.

The smart NIC, in some embodiments, is a configurable network interface controller that includes a general-purpose CPU (typically low-power compared to the processor of the computer for which the smart NIC acts as the network interface) in addition to one or more application-specific circuits (e.g., data message processing circuits). FIG. **1** conceptually illustrates the hardware of a smart NIC **100** of some embodiments that can be configured to perform data message processing using a cache with entries generated by a software forwarding element executing on the computer for which the smart NIC is the interface. As shown, the smart NIC **100** includes its own general-purpose (x86) CPU **105**, a set of application-specific integrated circuit (ASICs) **110**, memory **115**, and a configurable PCIe interface **120**. The ASICs **110**, in some embodiments, include at least one I/O

ASIC that handle the processing of data messages forwarded to and from the computer, and are at least partly controlled by the CPU **105**. In some embodiments, either in addition to or as an alternative to the ASICs, the smart NIC may include a set of configurable field-programmable gate arrays (FPGAs).

The configurable PCIe interface **120** enables connection of the smart NIC **100** to the other physical components of a computer system (e.g., the x86 CPU, memory, etc.) via the PCIe bus of the computer system. Via this configurable PCIe interface, the smart NIC **100** can present itself to the computer system as a multitude of devices, including a data message processing NIC, a hard disk (using non-volatile memory express (NVMe) over PCIe), or other types of devices. The CPU **105** executes a NIC operating system (OS) in some embodiments that controls the ASICs **110** and can perform other operations as well. In some embodiments, a data message processing ASIC **110** stores the cache entries and performs the operations matching data messages to these cache entries, while the CPU **105** stores rule updates, performs validation of matched cache entries, and manages cache entry invalidation.

FIG. **2** conceptually illustrates the NIC OS **200** of a smart NIC **205** of some embodiments. The NIC OS **200** is executed, in some embodiments, by the CPU of the smart NIC (e.g., CPU **105**). This NIC OS **200** includes a PCIe driver **210**, a virtual switch **220**, and other functions **215**.

The PCIe driver **210** includes multiple physical functions **225**, each of which is capable of instantiating multiple virtual functions **230**. These different physical functions **225** enable the smart NIC to present as multiple different types of devices to the computer system to which it attaches via its PCIe bus. For instance, the smart NIC can present itself as a network adapter (for processing data messages to and from the computer system) as well as a non-volatile memory express (NVMe) disk in some embodiments.

The NIC OS **200** of some embodiments is capable of executing a virtualization program (similar to a hypervisor) that enables sharing resources (e.g., memory, CPU resources) of the smart NIC among multiple machines (e.g., VMs) if those VMs execute on the computer. The virtualization program can provide compute virtualization services and/or network virtualization services similar to a managed hypervisor in some embodiments. These network virtualization services, in some embodiments, include segregating data messages into different private (e.g., overlay) networks that are defined over the physical network (shared between the private networks), forwarding the data messages for these private networks (e.g., performing switching and/or routing operations), and/or performing middlebox services for the private networks.

To implement these network virtualization services, the NIC OS **200** of some embodiments executes the virtual switch **220**. The virtual switch **220** enables the smart NIC to perform software-defined networking and provide the I/O ASIC **235** of the smart NIC **205** with a set of flow entries (e.g., the cache entries described herein) so that the I/O ASIC **235** can perform flow processing offload (FPO) for the computer system in some embodiments. The I/O ASIC **235**, in some embodiments, receives data messages from the network and transmits data messages to the network via one or more physical network ports **240**.

The other functions **215** executed by the NIC operating system **200** of some embodiments can include various other operations, including operations not directly related to data message processing (e.g., operations for a machine-learning system). In addition, the NIC operating system **200** (either the virtual switch **220** or other functions **215** of the operating system) may perform various cache entry validation and invalidation operations and maintain a rule update table used to perform the cache entry validation.

As noted, the smart NIC of some embodiments processes data messages using cache entries (e.g., cache entries installed by a software forwarding element (SFE) executing on a computer for which the smart NIC is the interface) such that at least a subset of the data messages received at the smart NIC can be processed without a need to provide the data messages to the SFE. Data message processing by the smart NIC ASIC tends to be faster than processing by the SFE, even before accounting for the savings realized by avoiding the need to pass the data messages to and from the computer (e.g., via the PCIe interface).

FIG. **3** conceptually illustrates a process **300** for processing a data message received at a smart NIC. The process **300** is performed at least in part by the CPU of the smart NIC. In some embodiments, a data message processing ASIC (or FPGA) of the smart NIC performs some of the operations as well (e.g., identifying matching entries for data messages). The process **300** will be described in part by reference to FIGS. **4** and **5**A-B, which illustrate examples of the use of a cache on a smart NIC to process data messages. The process **300**, in some embodiments, is performed for each data message received at the smart NIC (in many cases, the process is performed in parallel for numerous data messages).

As shown, the process **300** begins by receiving (at **305**) a data message at the smart NIC. In some embodiments, the SFE (and thus the smart NIC) primarily processes data messages received from outside the computer. The SFE can be configured to process these data messages and then deliver the data messages to another application executing on the computer, to process the data messages and forward the data messages to another destination (or return a data message to the source), etc. For instance, the computer might execute a domain name system (DNS) server, a dynamic host configuration protocol (DHCP) server, or an address resolution protocol (ARP) proxy that receives messages (e.g., DNS requests, DHCP requests, ARP requests) and sends replies. In some embodiments, the SFE for which the smart NIC processes data messages represents one or more virtualized network functions (VNFs) executing on the computer, with the actions taken by the VNF(s) incorporated into the cache entries. Other examples include various machine learning applications, such as a computer executing a parameter server for one or more ML models.

In addition, in certain situations, the smart NIC receives data messages originating from the computer (e.g., from virtual machines (VMs) or other data compute nodes executing on the computer). However, such data messages would typically require initial processing by the SFE on the computer (e.g., a virtual switch) in order for the SFE to determine that the data message should be sent to the smart NIC for processing. In some such embodiments, the SFE only offloads to the smart NIC data messages that the SFE knows can be handled by the smart NIC, because having the SFE pass a data message to the smart NIC only for the data message to be returned to the SFE for processing is inefficient.

The process **300** then matches (at **310**) the received data message against a classification cache stored on the smart NIC. In some embodiments, the smart NIC stores a classification cache with cache entries populated by the SFE based on data message processing results at the SFE. In some embodiments, each cache entry includes (i) a set of match

conditions for data messages belonging to the same data message flow as that processed data message and (ii) a set of actions for the smart NIC to perform on these subsequent data messages (e.g., to modify specific headers of the data message, to provide the data message to a data compute node executing on the computer, to forward the data message to a particular output interface, etc.).

In some embodiments, the cache entries all match on the same message header fields, such as a connection 5-tuple of source and destination network (e.g., IP) addresses, transport layer protocol, and source and destination transport layer port numbers. Using the same set of message header fields for all cache entries speeds up processing, in some embodiments, because one set of fields can be extracted and matched against all of the cache entries at once. Other embodiments, however, allow for different cache entries to match on different sets of message header fields. In some embodiments, the smart NIC performs the match operation in a manner dictated by a message processing ASIC of the smart NIC (e.g., using a hash of the data message header fields).

Next, the process **300** determines (at **315**) whether a matching cache entry is found for the data message. If the data message is the first data message in a flow received at the smart NIC, or the first received in a long enough period of time that a previous entry has been removed from the cache, then the smart NIC classification cache will not have a matching entry for the data message. If no cache entry is found, the process **300** proceeds to **345**, which is described below.

On the other hand, when a matching cache entry is found for the data message, the process determines whether this matched entry is still valid. The data message processing rules used by the SFE may be modified (e.g., rules can be deleted, new rules can be added, etc.) in real-time based on, e.g., updates from a network management and control system. As such, a cache entry for a data message flow could have been created prior to a rule update that affects how the data message flow should be processed. Rather than invalidating some or all cache entries every time a rule update is received, the smart NIC validates cache entries each time one of the entries is matched by storing the most recently updated rules in a rule table (or other data structure) along with timestamps indicating the time that the rule was updated (e.g., when the update was received by the SFE). In some embodiments, when a rule is updated at the SFE, the SFE provides this rule update to the smart NIC rule set along with a timestamp indicating the time that the rule was changed.

Thus, the process **300** determines (at **320**) whether the rule set (e.g., rule update table) stored on the smart NIC includes one or more rules matched by the received data message. The rule updates, in some embodiments, do not necessarily match on the same data message header fields, because rule updates may not be rules for a specific flow. As examples, rules implementing new static routes might match on ranges of network addresses and new firewall rules could match on groups of network or data link layer addresses, groups of transport layer port numbers, or other criteria. The list of new rules, however, is generally not that large and therefore will not necessarily be processing or time-intensive to search. It should be noted that, for faster processing, some embodiments perform this check for all data messages while the data message is matched against the cache entries so that if a match is found in the cache any matching rule updates will already have been found.

If the data message does not match any of the rule updates stored on the smart NIC, the process does not need to perform any additional validation because the cache entry can be assumed to be valid. Thus, the process **300** processes (at **325**) the data message according to the matched cache entry. That is, the smart NIC applies the action or actions specified by the cache entry to the data message. These actions may include dropping the data message, modifying one or more header fields of the data message, outputting the data message via a particular physical port of the smart NIC, providing the data message to a particular data compute node on the computer (e.g., via a physical or virtual function of the smart NIC), etc.

In some embodiments, the process **300** also updates (at **330**) the timestamp of the matched cache entry, then ends. Some embodiments do not update these timestamps, such that the timestamp of each cache entry is always the creation time of that entry. Other embodiments update the timestamp each time a cache entry is used or update cache entries only some of the time. For instance, some embodiments update cache entry timestamps randomly in a non-deterministic manner so that most of the time the timestamp is not updated but a small percentage of the time the timestamp is updated. From a consistency standpoint, updating the timestamp is not necessary and takes additional processing power and time (because if a rule update requires invalidation of a cache entry, the cache entry will not make it to the timestamp update). However, as described in more detail below, the timestamp information is useful for determining which cache entries to evict if the cache reaches a maximum size.

If the data message matches at least one of the rules stored on the smart NIC, the process **300** determines (at **335**) whether the timestamp of the matched cache entry is more recent than the timestamp of the matching rule or rules (e.g., the most recent rule updated that the data message matches). In some embodiments, both the rule updates and the cache entry have timestamps. The rule update timestamps indicate the time that the rule was changed at the SFE while the cache entry timestamps indicate either the time the cache entry was created or the time the cache entry was last matched and validated, in different embodiments. Cache entries that have earlier timestamps than one or more rule updates that could change the processing of data messages matching the cache entries should not be used because these could result in data messages being processed according to out-of-date rules. However, if the cache entry is newer than any of these rule updates, then the cache entry was generated according to the most up-to-date set of rules for the data message flow.

As such, if the timestamp of the cache entry is more recent than the timestamp of any rule updates matched by the data message, the cache entry is validated and the process **300** proceeds to **325**, described above (as though no rules in the rule updates match the data message). FIG. **4** conceptually illustrates an example of a smart NIC **400** processing a data message according to a valid cache entry over two stages **405-410**. As shown, the smart NIC **400** includes a classification cache **415** and a rule update set **420**. For simplicity, the cache **415** includes only two entries and the rule update set **420** only includes two rule updates. Each of the cache entries specifies (i) a connection 5-tuple against which received data messages are matched, (ii) a set of actions to take on matching data messages, and (iii) a timestamp. These timestamps, as previously described, may be either the initial creation time of the cache entry or the time the entry was last used.

The rule updates each specify a set of match conditions as well as actions and timestamps. It should be noted that while

the rule updates are shown as rules that include actions, in some embodiments, the rule updates simply specify match conditions (with timestamps) as the specified actions are not meaningful because the smart NIC is only determining whether the data message matches any of these rules. Furthermore, the rule updates could relate to rules being added, modified, or deleted from the SFE.

In the first stage **405**, the smart NIC **400** receives a data message **425**. This data message is a TCP data message with a source IP address 10.10.10.2, a destination IP address 20.20.20.1, a source port number 25, and a destination port number 80. As such, the data message matches the first entry in the classification cache **415** with a timestamp of 14:09:51 on 3/27/2022, specifying to drop matching data messages (shown in bold). As a result, the smart NIC **400** also determines whether the data message matches any of the rule updates, thereby identifying a matching rule update with a timestamp of 14:09:20 on 3/27/2022 (also shown in bold).

Because the timestamp of the matched cache entry is later than the matched rule update, that rule update was accounted for in the generation of the cache entry (in fact, the rule update could be the reason for the drop action) and thus the cache entry is valid. As such, in the second stage **410**, the smart NIC drops the data message **425**.

Returning to FIG. **3**, if the timestamp of the matched cache entry is older than the rule update (or, in some embodiments, exactly the same as the timestamp of the rule update), then the cache entry is assumed to be invalid and the process **300** discards (at **340**) the cache entry. For instance, if a rule is identified as having been deleted more recently than the cache entry, the cache entry might have been generated based in part on that deleted rule. If a rule is identified as having been added more recently than the cache entry, then the cache entry would not have been generated based on that new rule and therefore might specify incorrect actions to be taken on the data message. The smart NIC, in some embodiments, evicts the entry from the cache.

The process **300** also provides (at **345**) the data message to the SFE executing on the computer for the SFE to process. As noted, in different embodiments, this SFE could be a virtual switch, a combination of software forwarding elements such as one or more virtual switches and/or virtual routers, a virtualized or containerized network function operating on a VM or container, or other set of data message processing operations. The smart NIC provides the data message to the SFE via a physical or virtual function in some embodiments.

The SFE then processes the data message to determine a set of actions to apply to the data message and applies these actions to the data message (which may involve sending the data message out via an interface of the smart NIC). After the SFE processes the data message, the SFE also provides a new cache entry to the smart NIC. The process **300** installs (at **350**) this new cache entry in its classification cache, then ends. In some embodiments, the smart NIC CPU receives the cache entry and adds the cache entry to a cache stored by the data message processing ASIC of the smart NIC.

FIGS. **5A-5B** conceptually illustrate an example of the smart NIC **400** identifying that a data message matches an out-of-date cache entry and providing the data message to an SFE **500** for processing over three stages **505-515**. In the first stage **505**, the smart NIC **400** receives a data message **520**. This data message is a TCP data message with a source IP address 10.10.10.1, a destination IP address 30.30.30.1, a source port number 15, and a destination port number 443. As such, the data message matches the second entry in the classification cache **415** with a timestamp of 14:10:31 on 3/27/2022, specifying to output matching data messages to interface IF2 (shown in bold). As a result, the smart NIC **400** also determines whether the data message matches any of the rule updates, thereby identifying a matching rule update with a timestamp of 14:12:02 on 3/27/2022 (also shown in bold).

Because the timestamp of the matched cache entry is earlier than the matched rule update, the cache entry is out of date and may not provide the correct action for the data message **520**. As such, in the second stage **510**, the smart NIC **400** provides the data message (e.g., via a physical or virtual function or via a different data pathway) to the SFE **500** executing on a computer to which the smart NIC is attached. The SFE **500** processes the data message **520** and, as a result of this processing, provides a new cache entry **525** to the smart NIC **400** in the third stage **515**. The smart NIC **400** installs this new cache entry (shown in bold) into the classification cache **415**. Potentially based on the rule update identified in the first stage **505**, the new cache entry (with a timestamp of 14:20:04 on 3/27/2022) specifies to drop subsequent data messages belonging to this data flow.

In some embodiments, the cache stored on the smart NIC is relatively small (e.g., may only hold several dozen cache entries) due to size limitations of the smart NIC and/or a desire for very fast processing of incoming data messages. In certain contexts, when the SFE primarily processes data messages for a small number of large data message flows, the primary savings realized by using the smart NIC comes from having cache entries for these large data message flows so that the many data messages belonging to these flows do not need to be passed on for processing by the SFE. For instance, in a distributed machine learning context, if the smart NIC is located at a parameter server, very large flows providing parameter data may be received on a regular basis.

Because of the small cache size, once the cache has reached a fixed maximum size, some embodiments evict entries from the cache as new entries are added. To determine which existing cache entry should be evicted when a new cache entry is added from the SFE, some embodiments utilize a least recently used (LRU) metric or LRU approximation metric. As described above, some embodiments update the cache entry timestamps each time a data message matches a cache entry and that entry is validated. In this case, the cache entry with the earliest timestamp is the LRU entry and can be evicted. This same metric can be used in the case that the cache entry timestamps are only updated occasionally (e.g., every X data messages or on a random basis), if updating the cache entries with every data message is too time-consuming.

Even when the timestamps are only updated occasionally, keeping track of the earliest timestamp (or identifying the earliest timestamp each time a new cache entry is added) can be computationally expensive. Instead, some embodiments store a separate field that is used to approximate an identification of the LRU cache entry. This separate field attempts to identify the oldest timestamp but is updated in a lazy manner. When a cache entry needs to be evicted, the cache entry identified by this separate field as having the oldest timestamp is chosen and evicted from the cache.

If using any approximation metric to evict cache entries (or even when updating timestamps with every data message and then using these timestamps for eviction), it is possible that a cache entry for an ongoing data message flow will be evicted from the cache. However, the system is self-correcting in this case, in that the processing of this data message flow will not be adversely affected. The next data message

will take slightly longer to process because it will be passed to the SFE and the cache entry regenerated, but the data message will still be processed correctly and the cache entry will be reinstalled.

In some embodiments, the rule update table stored on the smart NIC is also size-limited. However, whereas the cache entries can be evicted without any concern that data messages will be processed incorrectly, the same does not apply to rule updates. If a rule update is removed from the update table, it is possible that some of the existing cache entries will be invalid but still used for processing data messages. While it is possible to identify each cache entry that is potentially affected by a rule update and evict these entries from the cache when removing a rule update from the table, this would be a very computationally intensive process and thus an inefficient use of resources.

Instead, some embodiments regularly clear out the entire rule update table while also invalidating the entire cache. In some embodiments, the smart NIC clears out the entire rule update table and invalidates the cache at regular time intervals (e.g., every 30 seconds, every 5 minutes, etc.). These time intervals, in some embodiments, are related to the typical frequency of rule updates in a system. In different systems, rules may be updated often due to, e.g., regular migration of VMs and/or containers or very irregularly in a more static system. In other embodiments, the smart NIC clears out the entire rule update table and invalidates the cache when the rule update table reaches a prespecified maximum size.

FIG. **6** conceptually illustrates a process **600** of some embodiments for deleting the rules in the rule update table and correspondingly invalidating a cache. The process **600** is performed by a smart NIC in some embodiments that operates to process data messages as described above by reference to the process **300**.

As shown, the process **600** begins by receiving (at **605**) a new rule update to add to the rule update table. In some embodiments, the smart NIC receives rule updates directly from a controller that also sends the rule updates to the SFE. In other embodiments, the SFE is configured to provide rule updates to the smart NIC as those updates are received at the SFE. In some embodiments, the rule updates provided to the smart NIC specify the entire rule (i.e., the match conditions and actions, whether the rule is added, deleted, or modified, etc.). In other embodiments, only the match conditions for the rule update are provided to the smart NIC, as only these match conditions are necessary to determine whether or not a cache entry is valid or not.

The process **600** then adds (at **610**) the rule update to the rule update table. As noted, different embodiments may delete the rules of the rule update table based on different criteria (e.g., reaching a maximum size, a timer). In this example, the rule update table is cleared out and the cache invalidated when the table reaches a maximum number of updates.

Thus, upon adding the rule update to the table, the process **600** determines (at **615**) whether the rule update table has reached a maximum size. In some embodiments, the smart NIC makes this determination when the number of updates in the rule update table comes within a particular number of the maximum size, to avoid receiving a batch of updates that pushes the table past the maximum size. Other embodiments wait until the number of rule updates reaches all the way to maximum size that can be held in the table. If the rule update table has not reached the maximum size, the process **600** ends, as there is no need to clear out the table and/or cache.

However, if the rule update table has reached the maximum size, the process **600** notifies (at **620**) the SFE to rebuild its classifier. In some embodiments, when the smart NIC clears out the rule update table, the SFE rebuilds its classifier data structure used for data message processing. Depending on the type of SFE, this classifier can be a set of decision trees, a set of hash tables, or another data structure that amalgamates the rules enforced by the SFE. A typical SFE does not rebuild its classifier every time a rule update is received, because the rebuild process is resource intensive. In a dynamic environment with quickly changing rules (e.g., due to migration of data compute nodes), the SFE could be constantly rebuilding its classifier data structure.

Instead, the classifier rebuilds its data structure at time intervals or after the receipt of a particular number of rules. It should be noted that the SFE nevertheless applies any new rule updates to its data message processing right away, prior to incorporating these rule updates into the classifier data structure (doing otherwise would risk the continued processing of data messages with outdated rules). The SFE applies these rule updates outside of its classifier data structure, then rebuilds the classifier so that the faster data message processing enabled by the classifier incorporates these rule updates.

The process **600** also removes (at **625**) the rule update table (or removes all of the rule updates from the rule update table) and invalidates at least a subset of the cache entries, then ends. Because the smart NIC no longer stores these rule updates and therefore cannot use the rule updates to validate matched cache entries, the smart NIC invalidates these cache entries to ensure that data messages are not processed using entries based on out-of-date rules. Some embodiments simply invalidate all of the cache entries and allow the valid entries to be generated and reinstalled by the SFE data message processing for those data message flows. Other embodiments search through the timestamps of the cache entries to identify entries that are newer than any of the rule updates. However, if the rule update table is deleted right after receiving a rule update (rather than after a predetermined time interval), very few (if any) of the cache entries will be newer than the most recent rule update, even if timestamps are updated with the processing of each data message. Additionally, even if the rule update table is deleted after a predetermined time interval, determining which cache entries remain valid is computationally expensive, as it requires analysis of all of the timestamps of the rule updates as well as the cache entries. Given this, it is often easier to simply rebuild the cache based on data message processing of the SFE.

Some embodiments, to avoid either (i) invalidating all of the cache entries or (ii) comparing timestamps between cache entries and rule updates, use a sliding window technique with a set of multiple caches with different creation times. At regular intervals (a shorter interval than the time interval between rule update table removals), the smart NIC creates a new (empty) cache and deletes the oldest cache. For instance, if the rule update table is deleted every 15 minutes, the new caches could be created every 5 minutes (but offset from the rule update removal by 1 minute so that the newest cache is always created 1 minute prior to the rule update removal).

When a data message arrives, the smart NIC selects one of the current caches to query for a matching cache entry. In different embodiments, the smart NIC may use a round robin algorithm to select the cache for each data message, a randomization technique (e.g., hashing a set of header values that vary between data messages of a data flow so that

an individual flow is not always matched against the same cache), etc. If the selected cache does not have a matching cache entry for the data message, the data message is sent to the SFE executing on the host computer (as described above) and a new cache entry is generated and installed in that cache. As a result of the data messages for a flow being sent to the different caches, the SFE will install entries in all of the caches for the most common data message flows.

Thus, when the SFE classifier is rebuilt and the rule update table is removed, the most recently created cache should be more recent than the last rule update. This most recent cache does not need to be invalidated, even without checking all of the cache entry and rule update timestamps. Even if this most recent cache does not have an entry for every ongoing flow, it will typically include entries for the most common data message flows and is therefore still useful.

FIGS. **7**A-C conceptually illustrate the use of sliding window caches such that a cache with valid entries remains when a rule update table is deleted. FIG. **7**A shows the two classification caches **705** and **710**, as well as a rule update table **715**, stored by a smart NIC **700** at a time 14:30:00. The first cache **705**, created at time 14:20:00, includes entries for four data message flows. As shown by the timestamps, these four cache entries were created in the last ten minutes. The second cache **710**, created at time 14:25:00, also includes entries for four data message flows (created in the last five minutes). Three of the data message flows in the first cache **705** are also present in the second cache **710**, while one of the flows in each of the caches is not present in the other. In addition, at this point in time, three rule updates are present in the rule update table **715**. The most recent of these three rule updates has a timestamp of 14:29:45.

In the smart NIC **700**, each cache lasts for ten minutes and a new cache is created every five minutes (while deleting the oldest cache). As such, at time 14:30:00, the first cache **705** is invalidated. FIG. **7**B illustrates the smart NIC **700** at time 14:30:05 (five seconds later), at which point a new cache **720** has been created. At this point, the new cache **720** does not yet have any entries installed, but the second cache **710** still has all of its cache entries that can be used to process data messages for which it is the selected cache.

FIG. **7**C illustrates the smart NIC **700** at 14:31:00, at which time the rule update set **715** is removed and the oldest existing cache **710** is invalidated because its creation time is older than the latest rule update. By this time, the recently created cache **720** has entries for three of the data message flows that are also present in the now-invalidated cache **710**, so any data messages belonging to these flows can still be processed if this cache is selected. Furthermore, the smart NIC will subsequently create another cache and new entries will be installed in that cache.

FIG. **8** conceptually illustrates an electronic system **800** with which some embodiments of the invention are implemented. The electronic system **800** may be a computer (e.g., a desktop computer, personal computer, tablet computer, server computer, mainframe, a blade computer etc.), phone, PDA, or any other sort of electronic device. Such an electronic system includes various types of computer readable media and interfaces for various other types of computer readable media. Electronic system **800** includes a bus **805**, processing unit(s) **810**, a system memory **825**, a read-only memory **830**, a permanent storage device **835**, input devices **840**, and output devices **845**.

The bus **805** collectively represents all system, peripheral, and chipset buses that communicatively connect the numerous internal devices of the electronic system **800**. For instance, the bus **805** communicatively connects the processing unit(s) **810** with the read-only memory **830**, the system memory **825**, and the permanent storage device **835**.

From these various memory units, the processing unit(s) **810** retrieve instructions to execute and data to process in order to execute the processes of the invention. The processing unit(s) may be a single processor or a multi-core processor in different embodiments.

The read-only-memory (ROM) **830** stores static data and instructions that are needed by the processing unit(s) **810** and other modules of the electronic system. The permanent storage device **835**, on the other hand, is a read-and-write memory device. This device is a non-volatile memory unit that stores instructions and data even when the electronic system **800** is off. Some embodiments of the invention use a mass-storage device (such as a magnetic or optical disk and its corresponding disk drive) as the permanent storage device **835**.

Other embodiments use a removable storage device (such as a floppy disk, flash drive, etc.) as the permanent storage device. Like the permanent storage device **835**, the system memory **825** is a read-and-write memory device. However, unlike storage device **835**, the system memory is a volatile read-and-write memory, such a random-access memory. The system memory stores some of the instructions and data that the processor needs at runtime. In some embodiments, the invention's processes are stored in the system memory **825**, the permanent storage device **835**, and/or the read-only memory **830**. From these various memory units, the processing unit(s) **810** retrieve instructions to execute and data to process in order to execute the processes of some embodiments.

The bus **805** also connects to the input and output devices **840** and **845**. The input devices enable the user to communicate information and select commands to the electronic system. The input devices **840** include alphanumeric keyboards and pointing devices (also called "cursor control devices"). The output devices **845** display images generated by the electronic system. The output devices include printers and display devices, such as cathode ray tubes (CRT) or liquid crystal displays (LCD). Some embodiments include devices such as a touchscreen that function as both input and output devices.

Finally, as shown in FIG. **8**, bus **805** also couples electronic system **800** to a network **865** through a network adapter (not shown). In this manner, the computer can be a part of a network of computers (such as a local area network ("LAN"), a wide area network ("WAN"), or an Intranet, or a network of networks, such as the Internet. Any or all components of electronic system **800** may be used in conjunction with the invention.

Some embodiments include electronic components, such as microprocessors, storage and memory that store computer program instructions in a machine-readable or computer-readable medium (alternatively referred to as computer-readable storage media, machine-readable media, or machine-readable storage media). Some examples of such computer-readable media include RAM, ROM, read-only compact discs (CD-ROM), recordable compact discs (CD-R), rewritable compact discs (CD-RW), read-only digital versatile discs (e.g., DVD-ROM, dual-layer DVD-ROM), a variety of recordable/rewritable DVDs (e.g., DVD-RAM, DVD-RW, DVD+RW, etc.), flash memory (e.g., SD cards, mini-SD cards, micro-SD cards, etc.), magnetic and/or solid state hard drives, read-only and recordable Blu-Ray® discs, ultra-density optical discs, any other optical or magnetic media, and floppy disks. The computer-readable media may

store a computer program that is executable by at least one processing unit and includes sets of instructions for performing various operations. Examples of computer programs or computer code include machine code, such as is produced by a compiler, and files including higher-level code that are executed by a computer, an electronic component, or a microprocessor using an interpreter.

While the above discussion primarily refers to microprocessor or multi-core processors that execute software, some embodiments are performed by one or more integrated circuits, such as application specific integrated circuits (ASICs) or field programmable gate arrays (FPGAs). In some embodiments, such integrated circuits execute instructions that are stored on the circuit itself.

As used in this specification, the terms "computer", "server", "processor", and "memory" all refer to electronic or other technological devices. These terms exclude people or groups of people. For the purposes of the specification, the terms display or displaying means displaying on an electronic device. As used in this specification, the terms "computer readable medium," "computer readable media," and "machine readable medium" are entirely restricted to tangible, physical objects that store information in a form that is readable by a computer. These terms exclude any wireless signals, wired download signals, and any other ephemeral signals.

This specification refers throughout to computational and network environments that include virtual machines (VMs). However, virtual machines are merely one example of data compute nodes (DCNs) or data compute end nodes, also referred to as addressable nodes. DCNs may include non-virtualized physical hosts, virtual machines, containers that run on top of a host operating system without the need for a hypervisor or separate operating system, and hypervisor kernel network interface modules.

VMs, in some embodiments, operate with their own guest operating systems on a host using resources of the host virtualized by virtualization software (e.g., a hypervisor, virtual machine monitor, etc.). The tenant (i.e., the owner of the VM) can choose which applications to operate on top of the guest operating system. Some containers, on the other hand, are constructs that run on top of a host operating system without the need for a hypervisor or separate guest operating system. In some embodiments, the host operating system uses name spaces to isolate the containers from each other and therefore provides operating-system level segregation of the different groups of applications that operate within different containers. This segregation is akin to the VM segregation that is offered in hypervisor-virtualized environments that virtualize system hardware, and thus can be viewed as a form of virtualization that isolates different groups of applications that operate in different containers. Such containers are more lightweight than VMs.

Hypervisor kernel network interface modules, in some embodiments, is a non-VM DCN that includes a network stack with a hypervisor kernel network interface and receive/transmit threads. One example of a hypervisor kernel network interface module is the vmknic module that is part of the ESXi™ hypervisor of VMware, Inc.

It should be understood that while the specification refers to VMs, the examples given could be any type of DCNs, including physical hosts, VMs, non-VM containers, and hypervisor kernel network interface modules. In fact, the example networks could include combinations of different types of DCNs in some embodiments.

While the invention has been described with reference to numerous specific details, one of ordinary skill in the art will recognize that the invention can be embodied in other specific forms without departing from the spirit of the invention. In addition, a number of the figures (including FIGS. **3** and **6**) conceptually illustrate processes. The specific operations of these processes may not be performed in the exact order shown and described. The specific operations may not be performed in one continuous series of operations, and different specific operations may be performed in different embodiments. Furthermore, the process could be implemented using several sub-processes, or as part of a larger macro process. Thus, one of ordinary skill in the art would understand that the invention is not to be limited by the foregoing illustrative details, but rather is to be defined by the appended claims.

We claim:

1. A system, comprising:

a network interface configured to receive a first data message;

a virtual switch coupled to the network interface;

a memory configured to store a classification cache and a rule set, the classification cache comprising a first cache entry associated with a first timestamp, the rule set comprising a first rule associated with a second timestamp; and

a processor coupled to the memory, the processor being configured to:

determine a match between the first data message and the first cache entry;

in response to the first data message matching the first cache entry, determine a validity of the first cache entry based at least on the rule set; and

in response to the first cache entry being valid, processing the first data message based at least on the first cache entry;

wherein a classification cache is stored with cache entries based on data message processing results, each cache entry including a set of match conditions for data messages belonging to the same data message flow and a set of actions for the smart network interface controller to perform on subsequent data messages belonging to the same data message flow.

2. The system of claim **1**, wherein the virtual switch comprises a software forwarding element (SFE) configured to generate the first cache entry.

3. The system of claim **1**, wherein the processor is further configured to pass the first data message to the virtual switch in response to the first data message not matching the first cache entry.

4. The system of claim **1**, wherein the processor is further configured to determine a relationship between the first rule and the first cache entry.

5. The system of claim **1**, wherein the processor is further configured to compare the first timestamp to the second timestamp.

6. The system of claim **1**, wherein the first timestamp indicates a time the first cache entry was created or a time the first cache entry was last matched.

7. The system of claim **1**, wherein the rule set is updated based at least on an update from a network controller.

8. The system of claim **1**, wherein the processor is further configured to create a second cache entry and delete the first cache entry at a predetermined interval.

9. A system comprising:

a network interface configured to receive a first data message;

a virtual switch coupled to the network interface;

a memory configured to store a classification cache and a rule set, the classification cache comprising a first cache entry, and the rule set comprising a first rule; and

a processor coupled to the memory, the processor being configured to:

determine a match between the first data message and the first cache entry;

in response to the first data message matching the first cache entry, determine a validity of the first cache entry based at least on the rule set; and

in response to the first cache entry being valid, processing the first data message based at least on the first cache entry;

wherein a classification cache is stored with cache entries based on data message processing results, each cache entry including a set of match conditions for data messages belonging to the same data message flow and a set of actions for the smart network interface controller to perform on subsequent data messages belonging to the same data message flow.

10. The system of claim **9**, wherein the virtual switch comprises a software forwarding element (SFE) configured to generate the first cache entry.

11. The system of claim **9**, wherein the processor is further configured to pass the first data message to the virtual switch in response to the first data message not matching the first cache entry.

12. The system of claim **11**, wherein the virtual switch is configured to process the first data message and provide a second cache entry to the processor based on a processing result of the first data message.

13. The system of claim **9**, wherein the processor is further configured to delete the first cache entry at a predetermined interval.

14. The system of claim **9**, wherein the processor comprises a central processing unit (CPU).

15. The system of claim **9**, wherein the processor comprises an application-specific integrated circuit (ASIC).

16. The system of claim **9**, wherein the processor is further configured to determine a relationship between the first rule and the first cache entry.

17. A method, comprising:

receiving a first data message;

determining whether the first data message matches a first cache entry;

in response to the first data message matching the first cache entry, determining whether the first cache entry is valid based at least on a rule set; and

in response to the first cache entry being valid, processing the first data message based at least on the first cache entry;

wherein a classification cache is stored with cache entries based on data message processing results, each cache entry including a set of match conditions for data messages belonging to the same data message flow and a set of actions for the smart network interface controller to perform on subsequent data messages belonging to the same data message flow.

18. The method of claim **17**, wherein:

the first cache entry is associated with a first timestamp; and

the rule set comprises a first rule associated with a second timestamp.

19. The method of claim **18**, further comprising comparing the first timestamp to the second timestamp.

20. The method of claim **18**, wherein the first timestamp indicates a time the first cache entry was created or a time the first cache entry was last matched.

* * * * *