US 20250283613A1

(19) United States

(12) Patent Application Publication

KIM et al.

(10) Pub. No.: US 2025/0283613 A1

(43) Pub. Date: Sep. 11, 2025

(54) **WINDOW-TYPE AIR CONDITIONER**

(71) Applicant: **Samsung Electronics Co., Ltd.**, Suwon-si (KR)

(72) Inventors: **Munsub KIM**, Suwon-si (KR); **Duhan JUNG**, Suwon-si (KR)

(21) Appl. No.: **19/219,763**

(22) Filed: **May 27, 2025**

Related U.S. Application Data

(63) Continuation of application No. PCT/KR2023/016665, filed on Oct. 25, 2023.

(30) **Foreign Application Priority Data**

Jan. 16, 2023 (KR) 10-2023-0006315

Publication Classification

(51) **Int. Cl.**

F24F 1/027	(2019.01)
F24F 1/029	(2019.01)
F24F 1/031	(2019.01)
F24F 13/02	(2006.01)
F24F 13/26	(2006.01)
F24F 13/30	(2006.01)

(52) **U.S. Cl.**

CPC ***F24F 1/027*** (2013.01); ***F24F 1/029*** (2019.02); ***F24F 1/031*** (2019.02); ***F24F 13/02*** (2013.01); ***F24F 13/26*** (2013.01); ***F24F 13/30*** (2013.01)

(57) **ABSTRACT**

A window-type air conditioner according to an example embodiment may include: an outdoor module including a compressor that compresses a refrigerant, an outdoor heat exchanger in which heat exchange occurs, and an outdoor housing; an indoor module including an indoor housing spaced apart from the outdoor housing, and disposed inside the indoor housing; and a connection module arranged between the outdoor module and the indoor module to connect the outdoor module to the indoor module in a thickness direction of a window included in a window frame, wherein the connection module includes a refrigerant pipe that provides a path for the refrigerant to move between the outdoor module and the indoor module, and a total heat exchange module that provides a discharge path for discharging indoor air to outdoors and a suction path for suctioning outdoor air to indoors, and performs indoor ventilation through heat exchange between the indoor air moving along the discharge path and the outdoor air moving along the suction path.

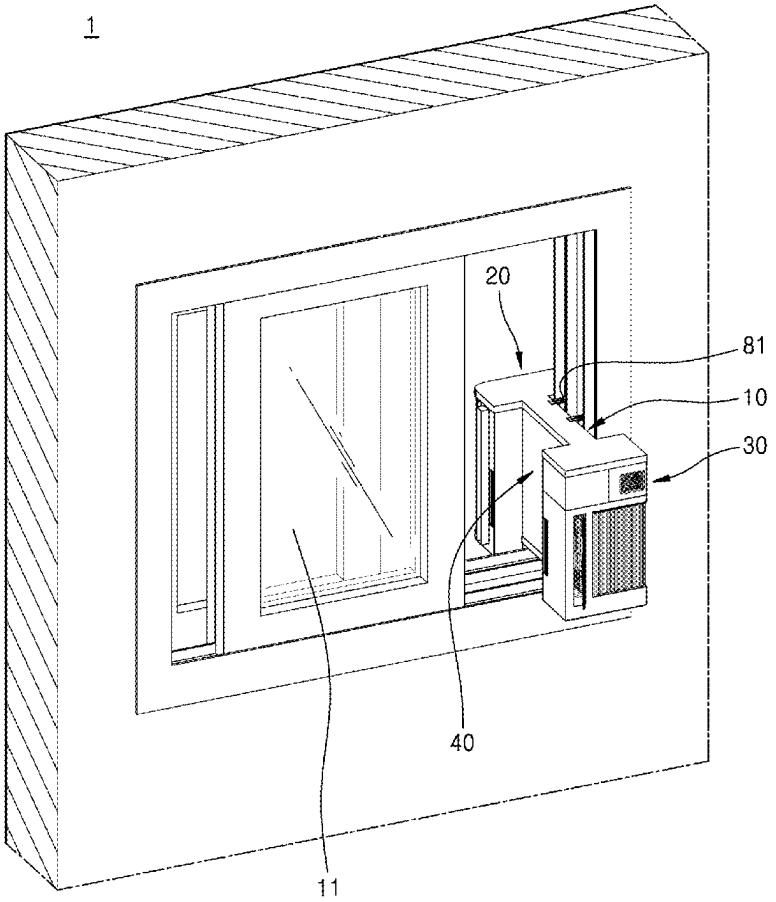

FIG. 1

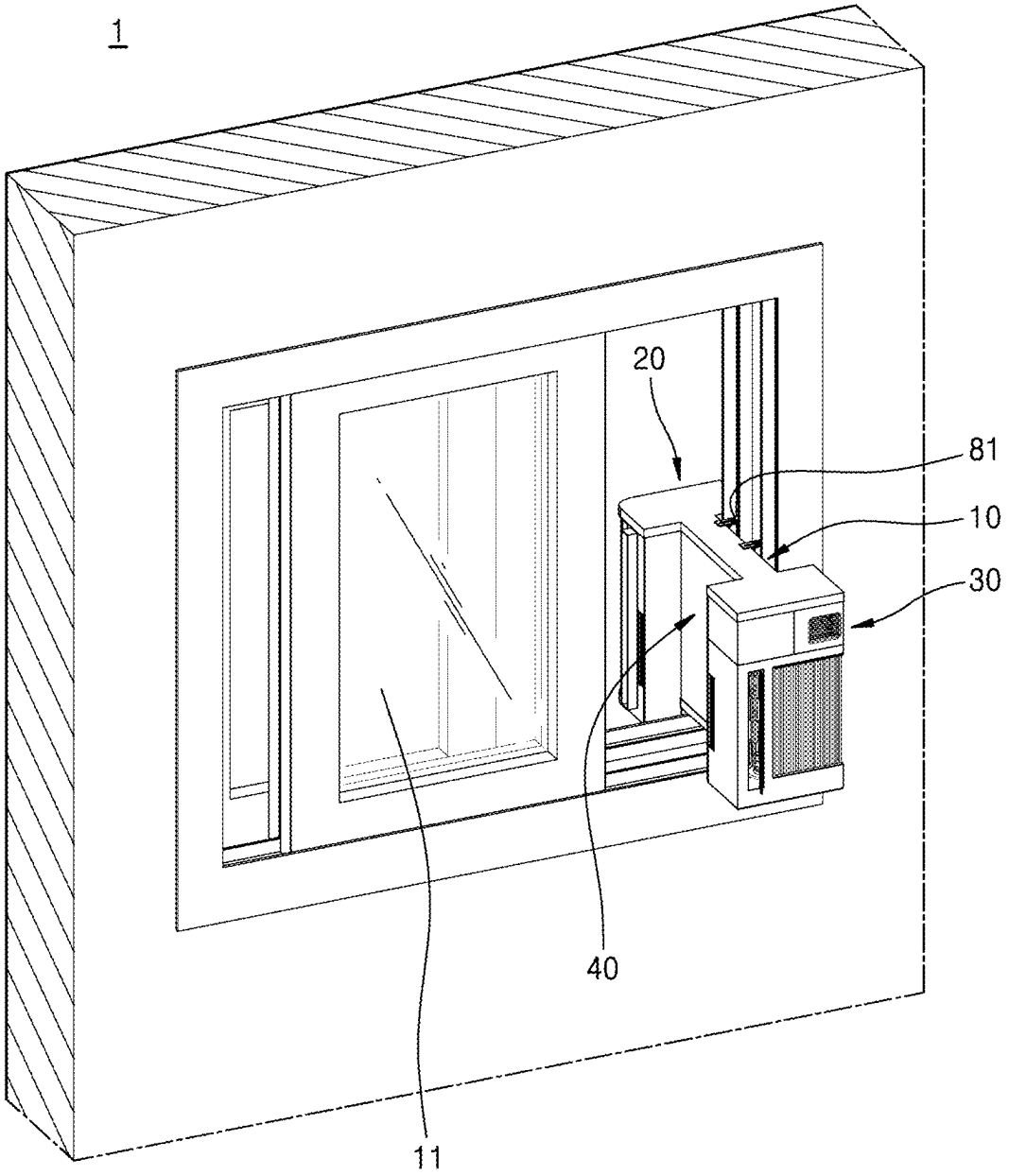

FIG. 2

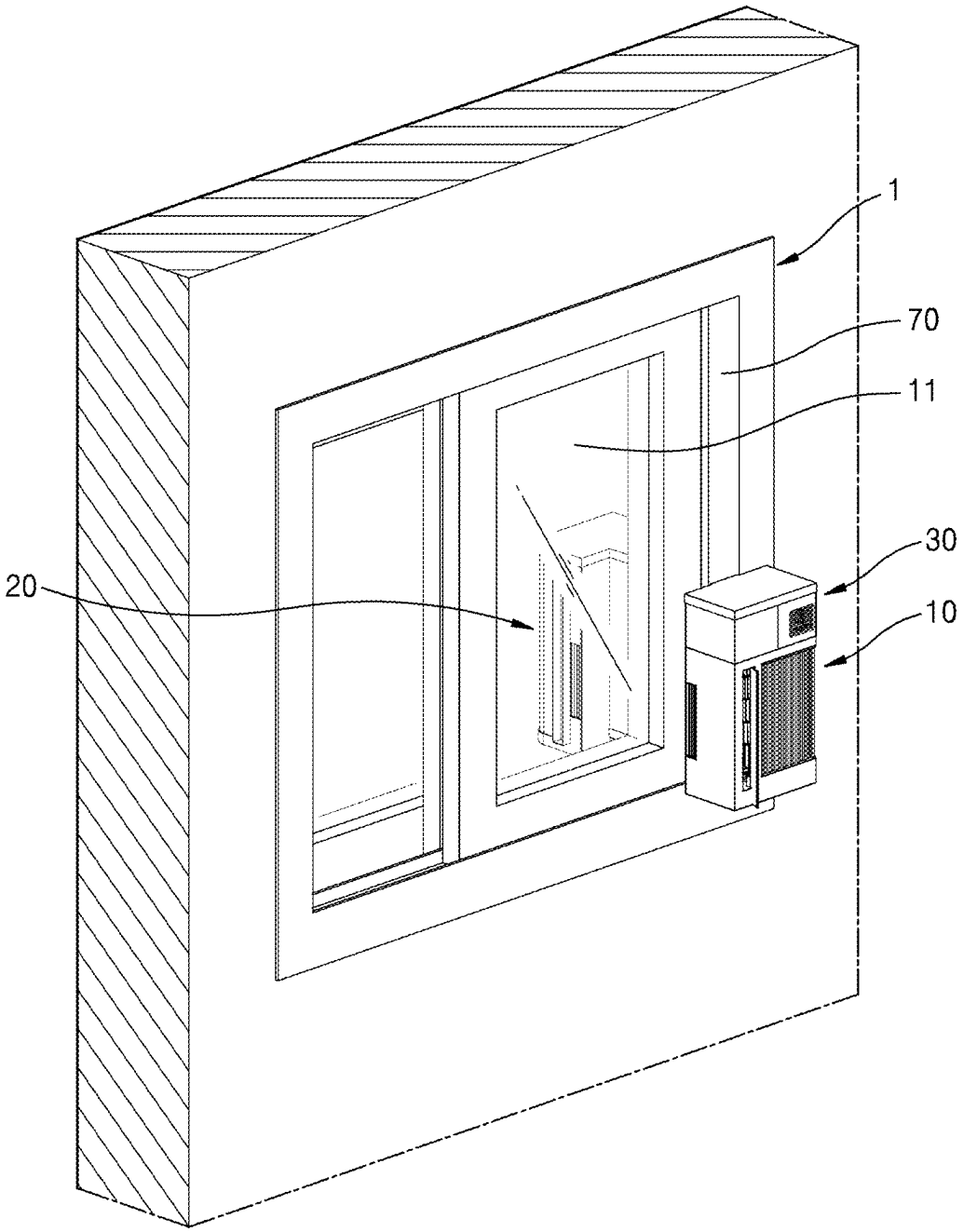

FIG. 3

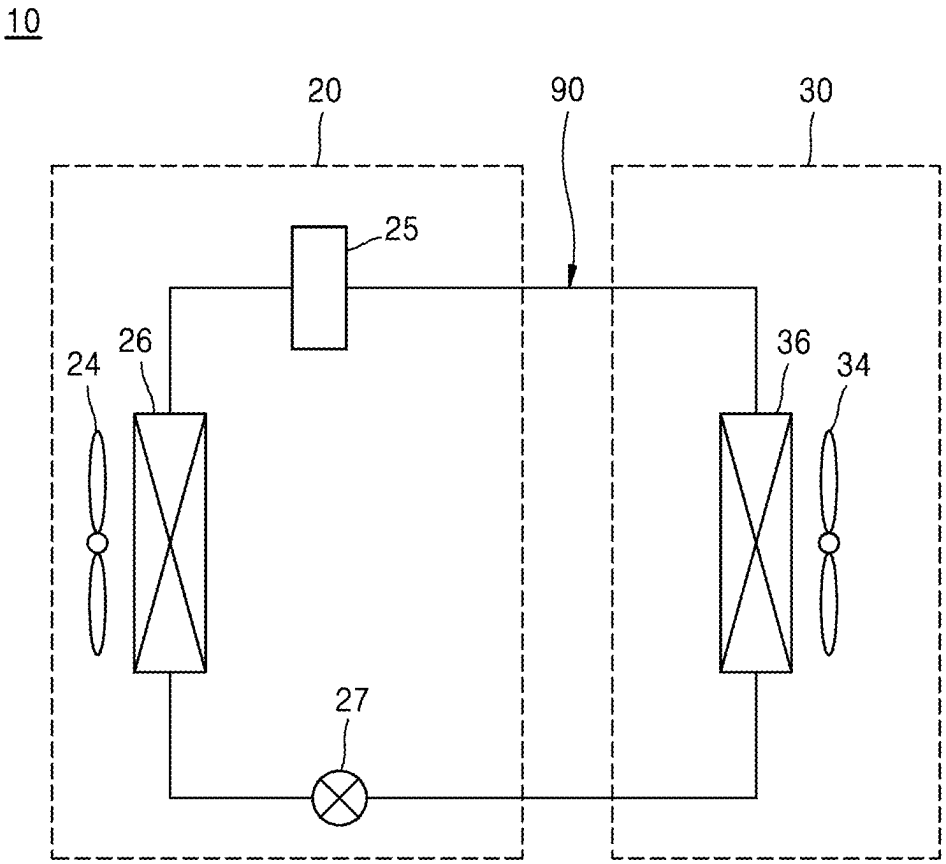

FIG. 4

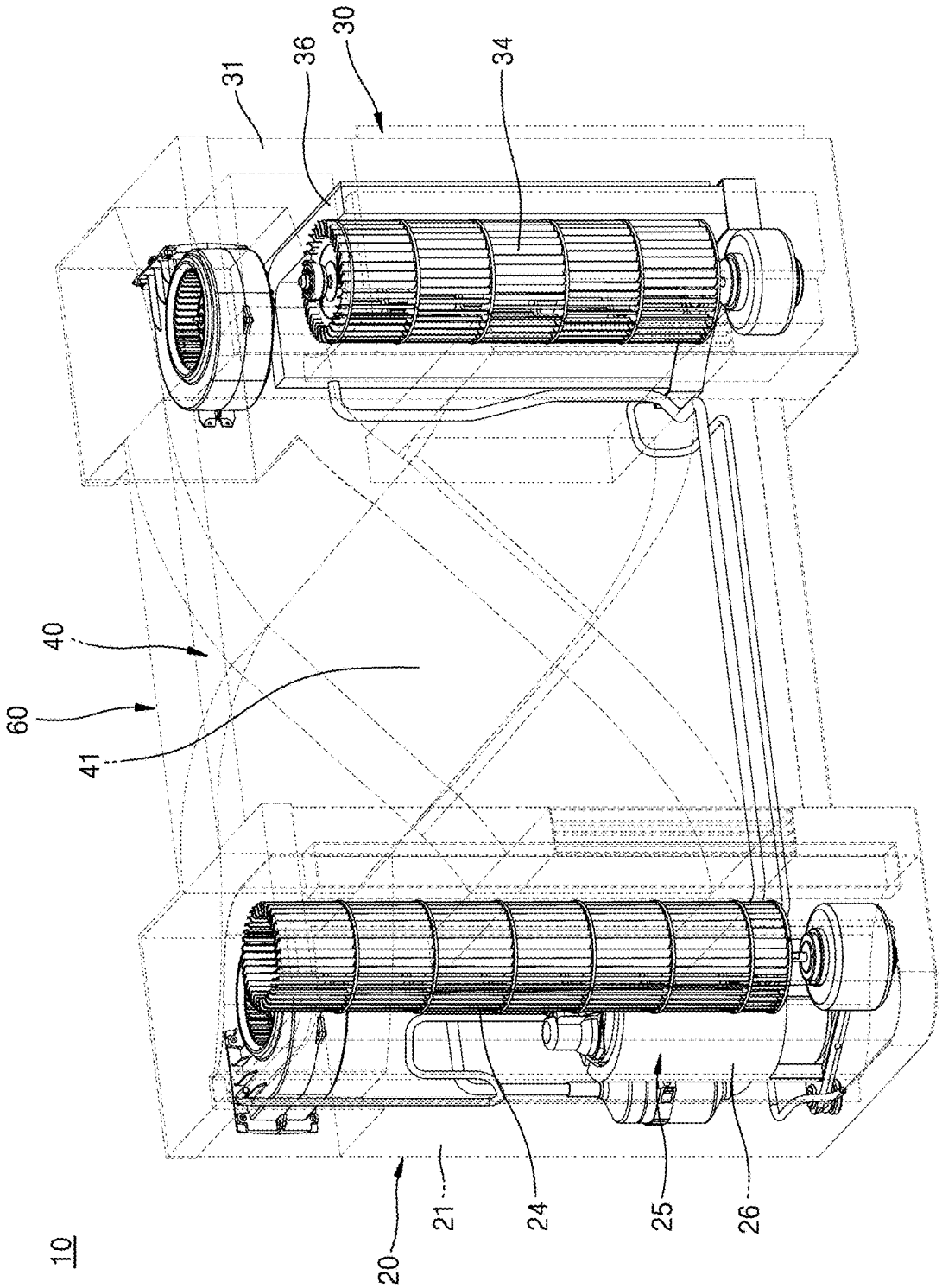

FIG. 5

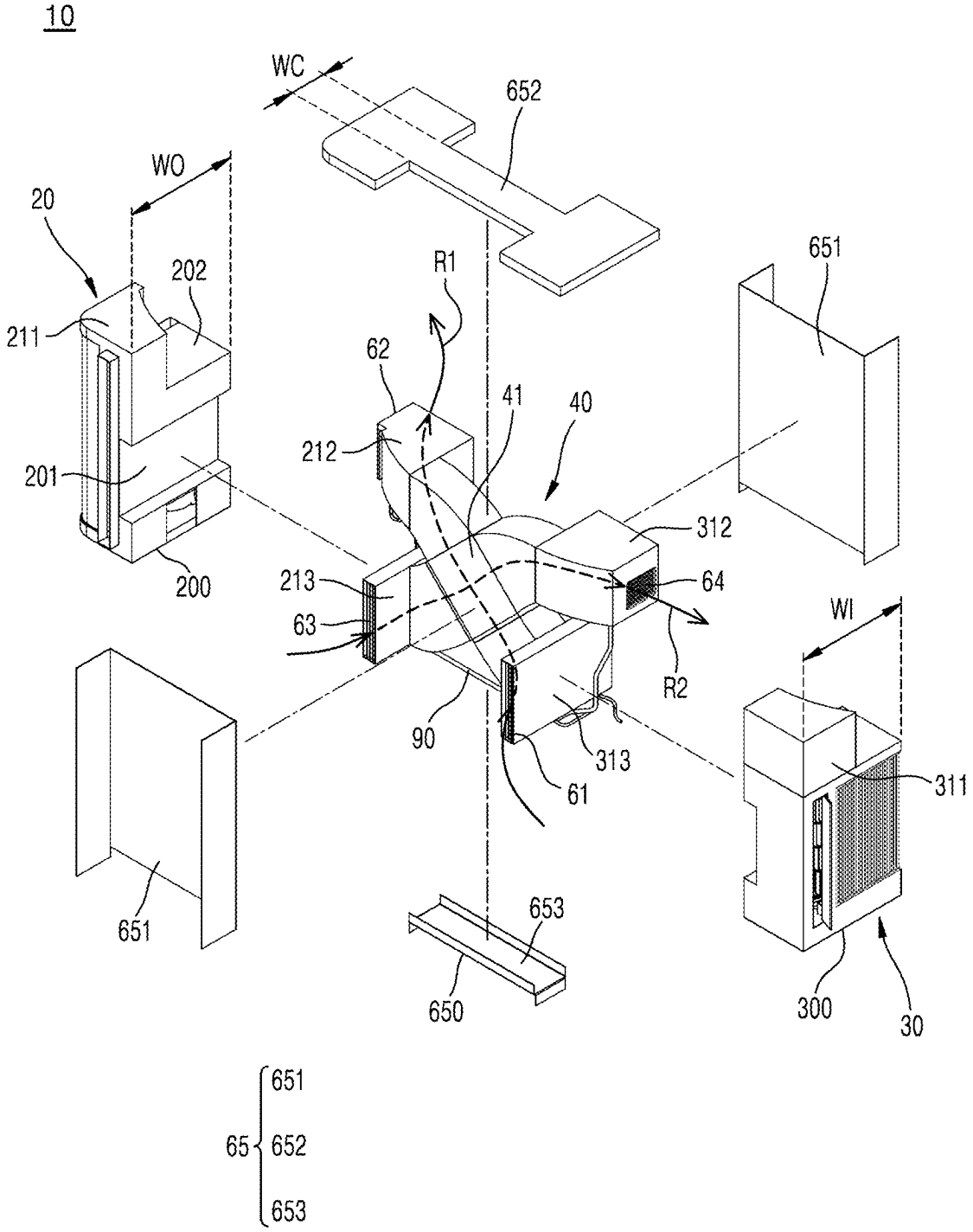
10
WC
652
WO
20
202
211
R1
651
62
41
40
212
201
312
200
213
64
63
WI
R2
90
313
61
311
651
653
650
300
30
65
651
652
653

FIG. 6

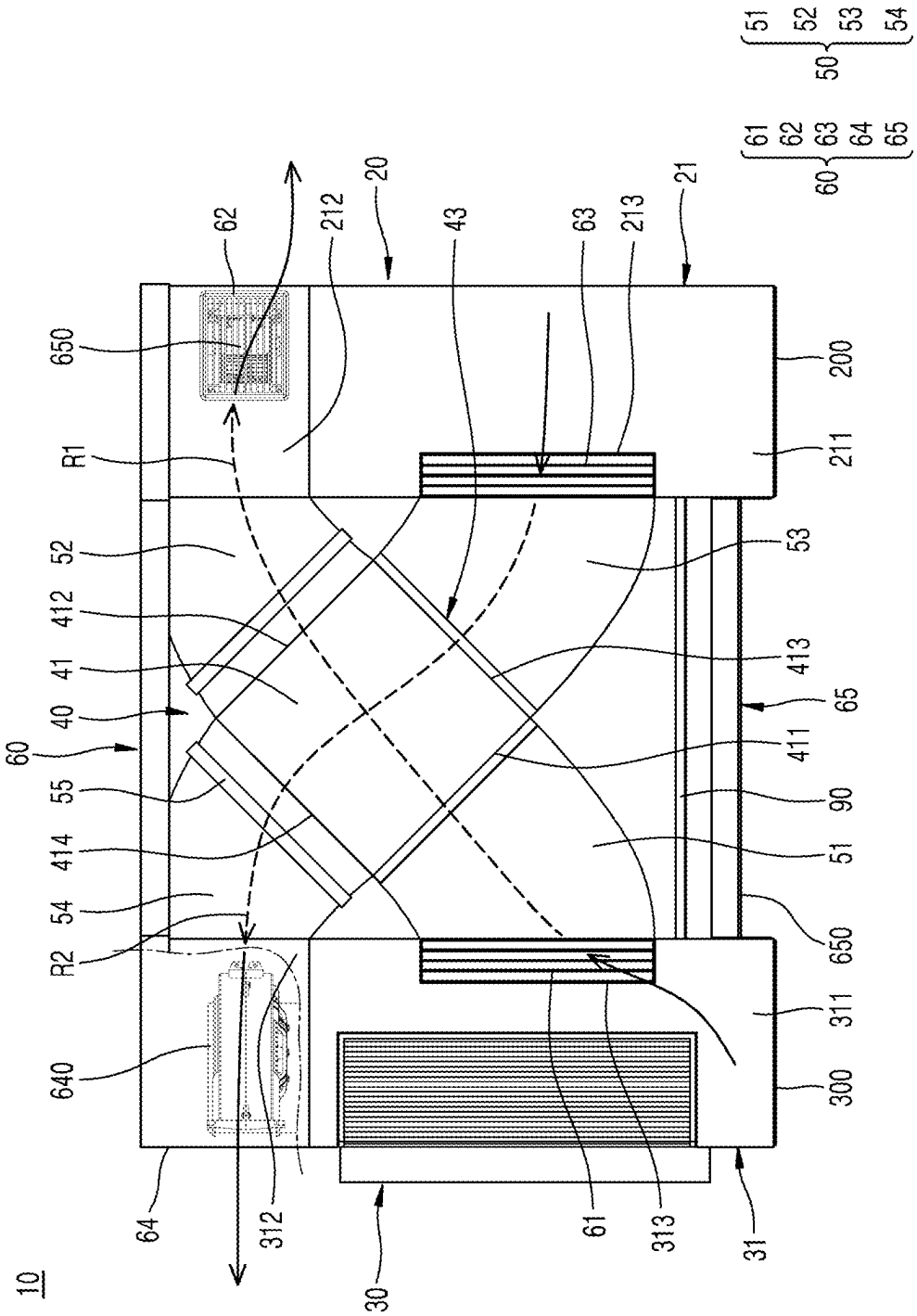
10
64
640
R2
54
414
55
60
40
41
412
52
R1
650
62
212
20
43
63
213
21
200
211
53
413
65
411
90
51
650
311
300
31
313
61
30
312
50
51
52
53
54
60
61
62
63
64
65

FIG. 7

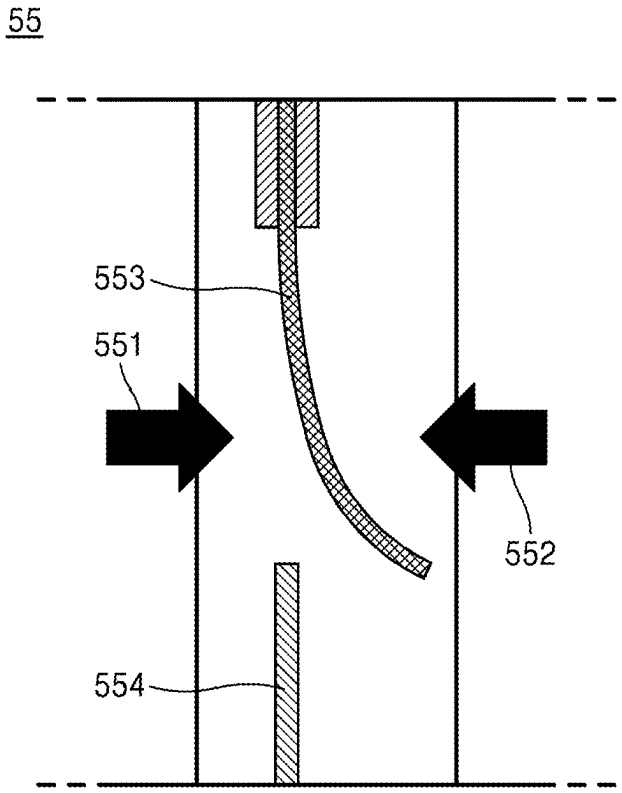

FIG. 8A

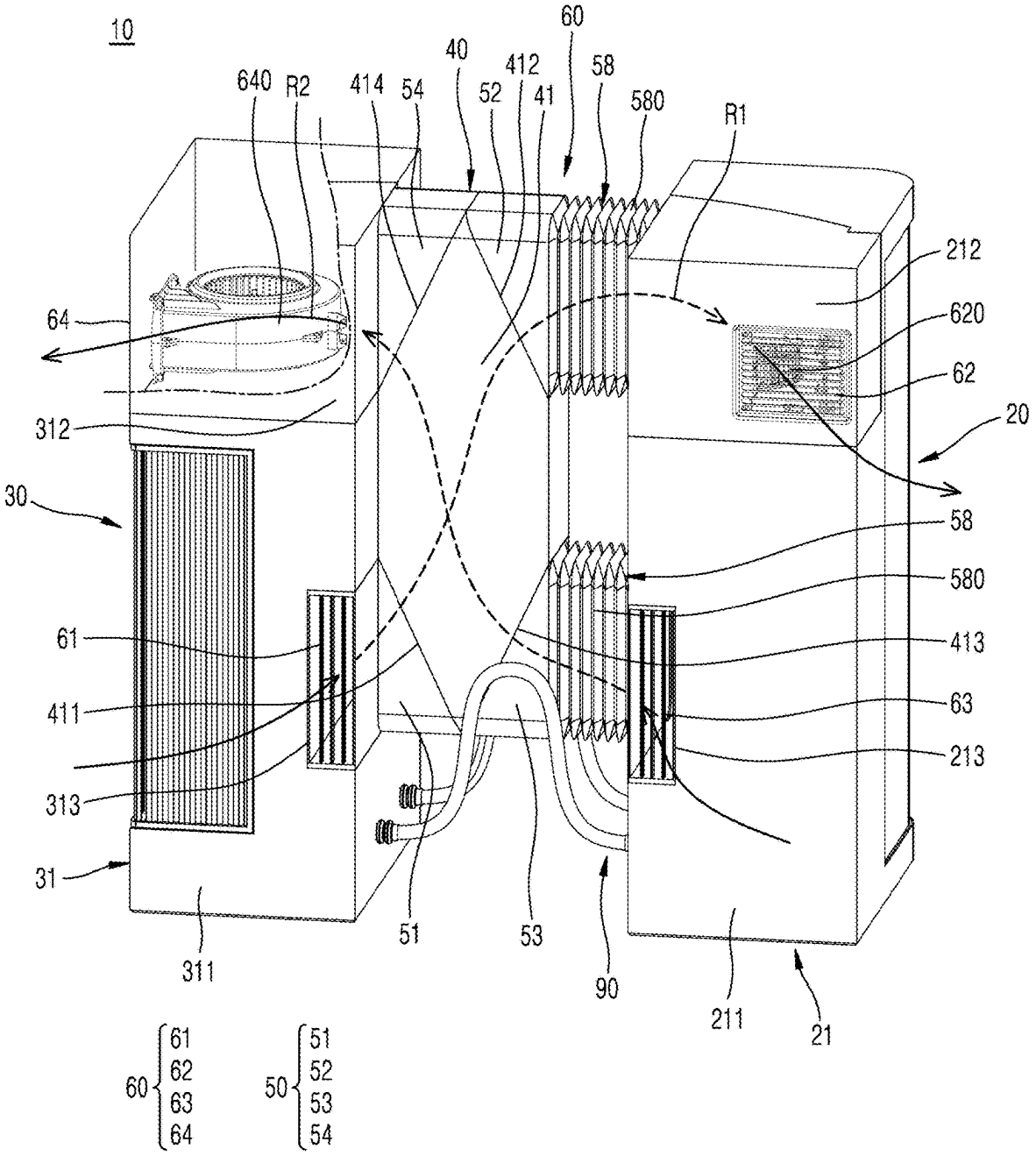
10
60
40
412
58
640
R2
414
54
52
41
580
R1
212
64
620
62
312
20
30
58
580
61
413
411
63
213
313
31
51
53
90
311
211
21
60 61 62 63 64
50 51 52 53 54

FIG. 8B

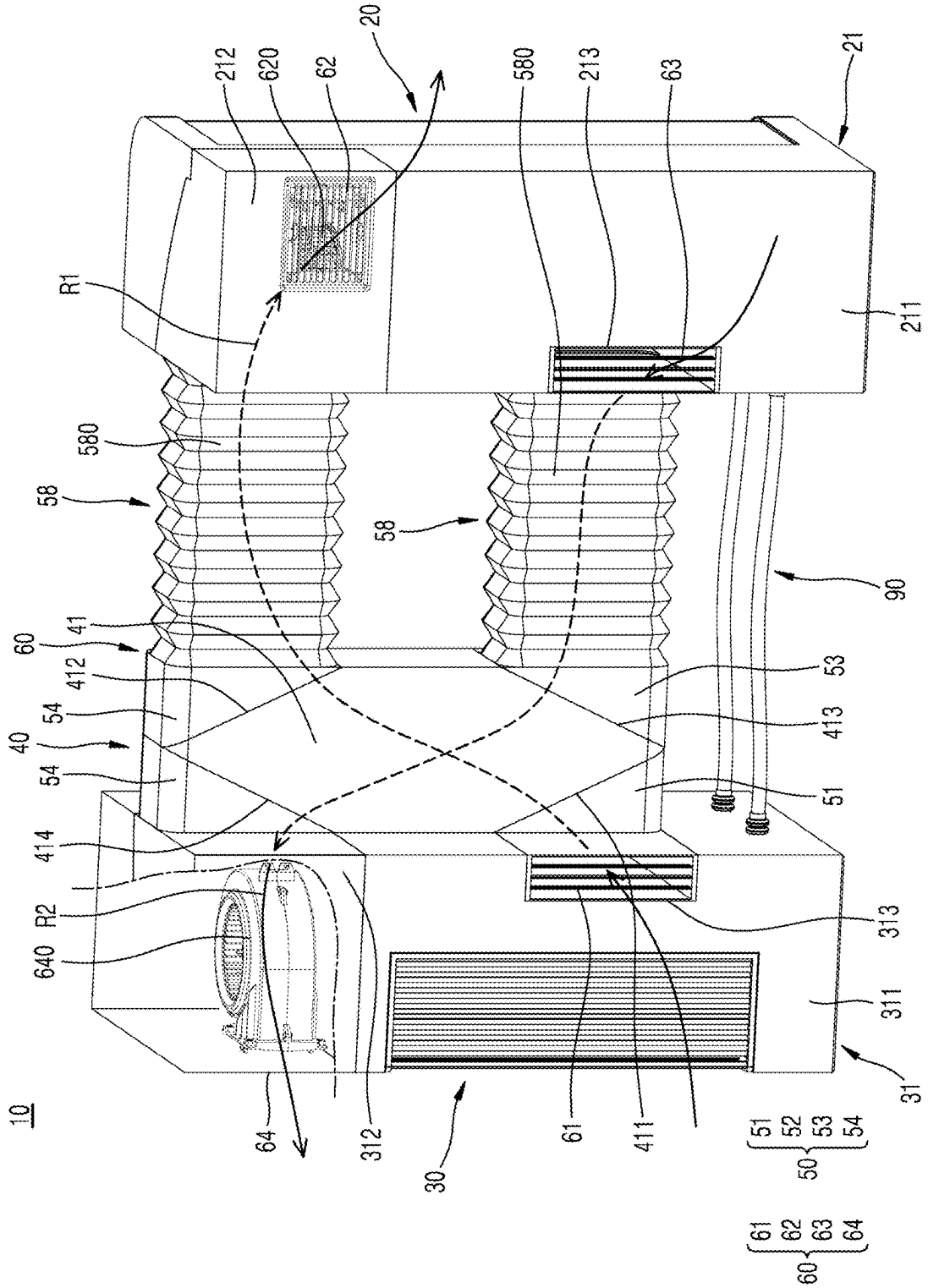
10
20
21
211
212
213
30
31
311
312
313
40
41
411
412
413
414
50
51
52
53
54
58
60
61
62
63
64
90
580
620
640
R1
R2

FIG. 9

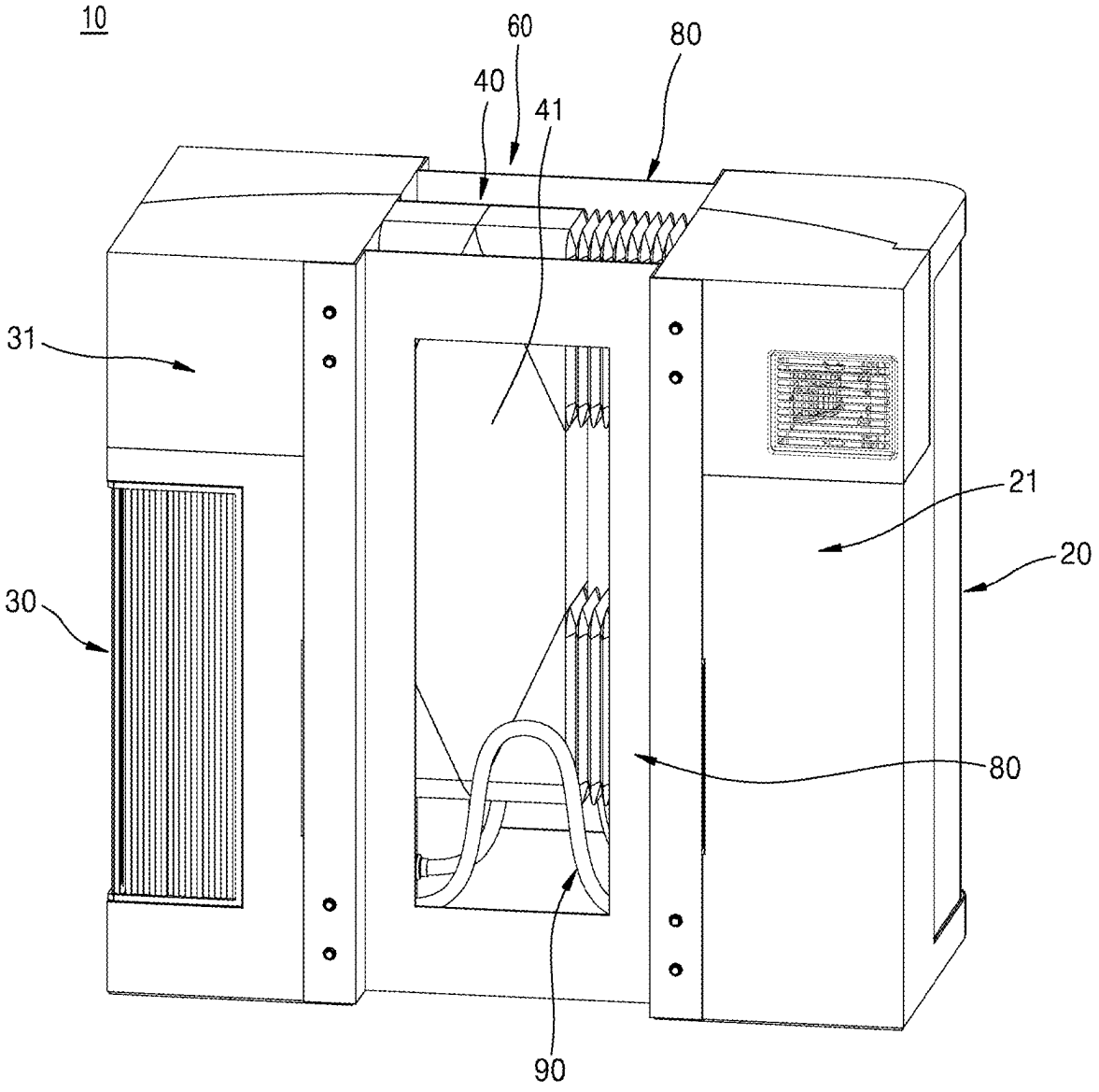

FIG. 10A

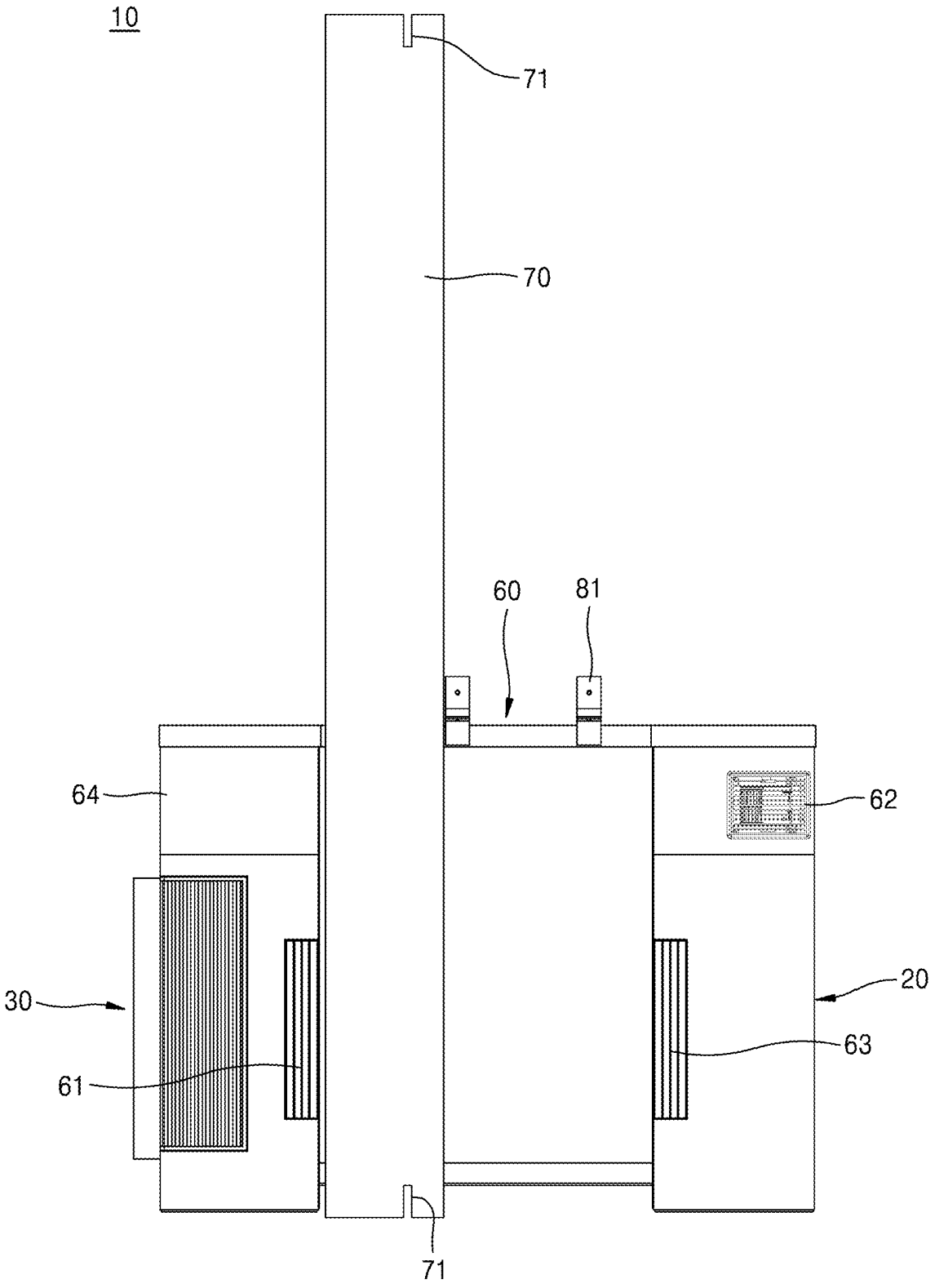

FIG. 10B

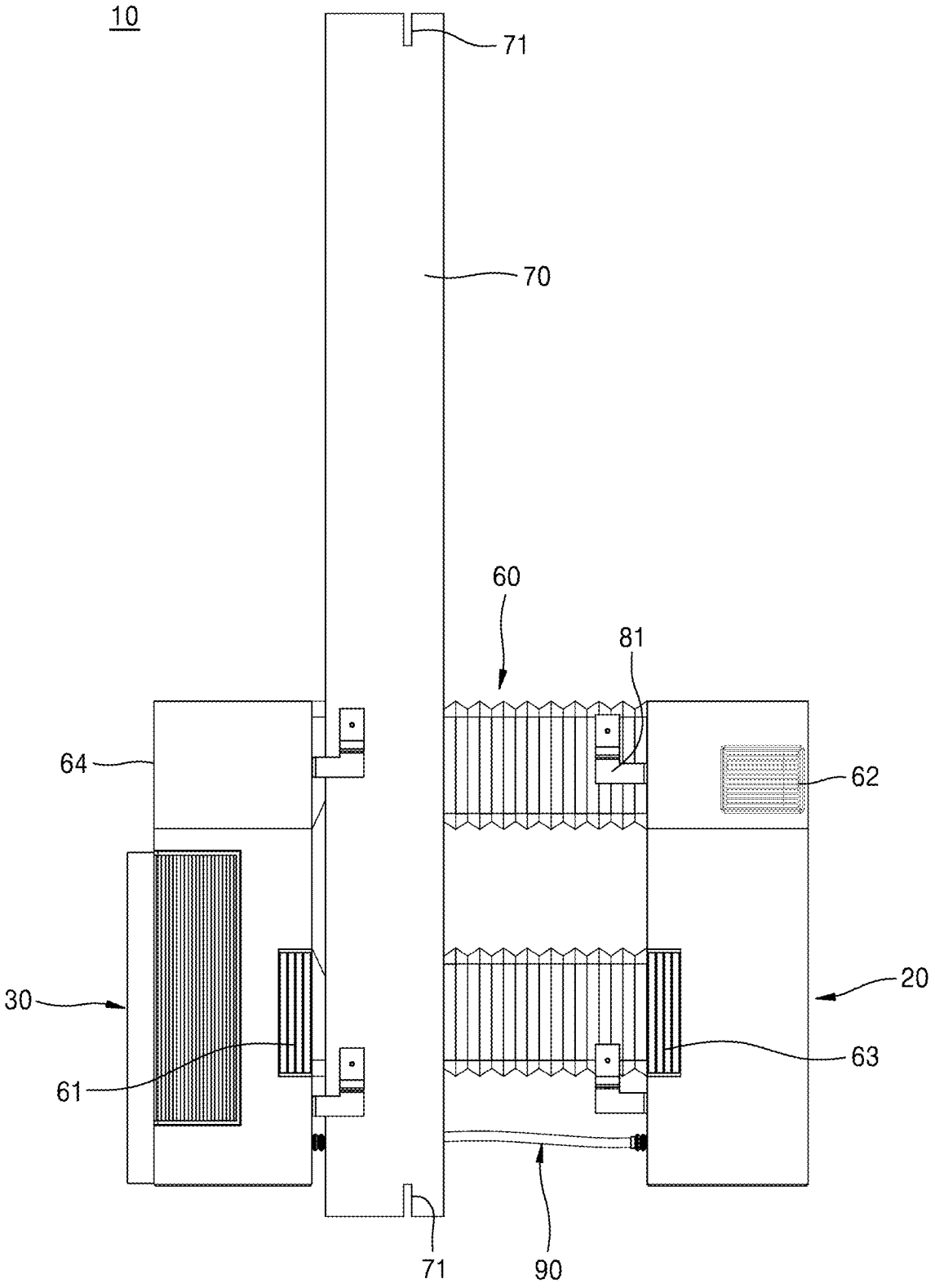

FIG. 11

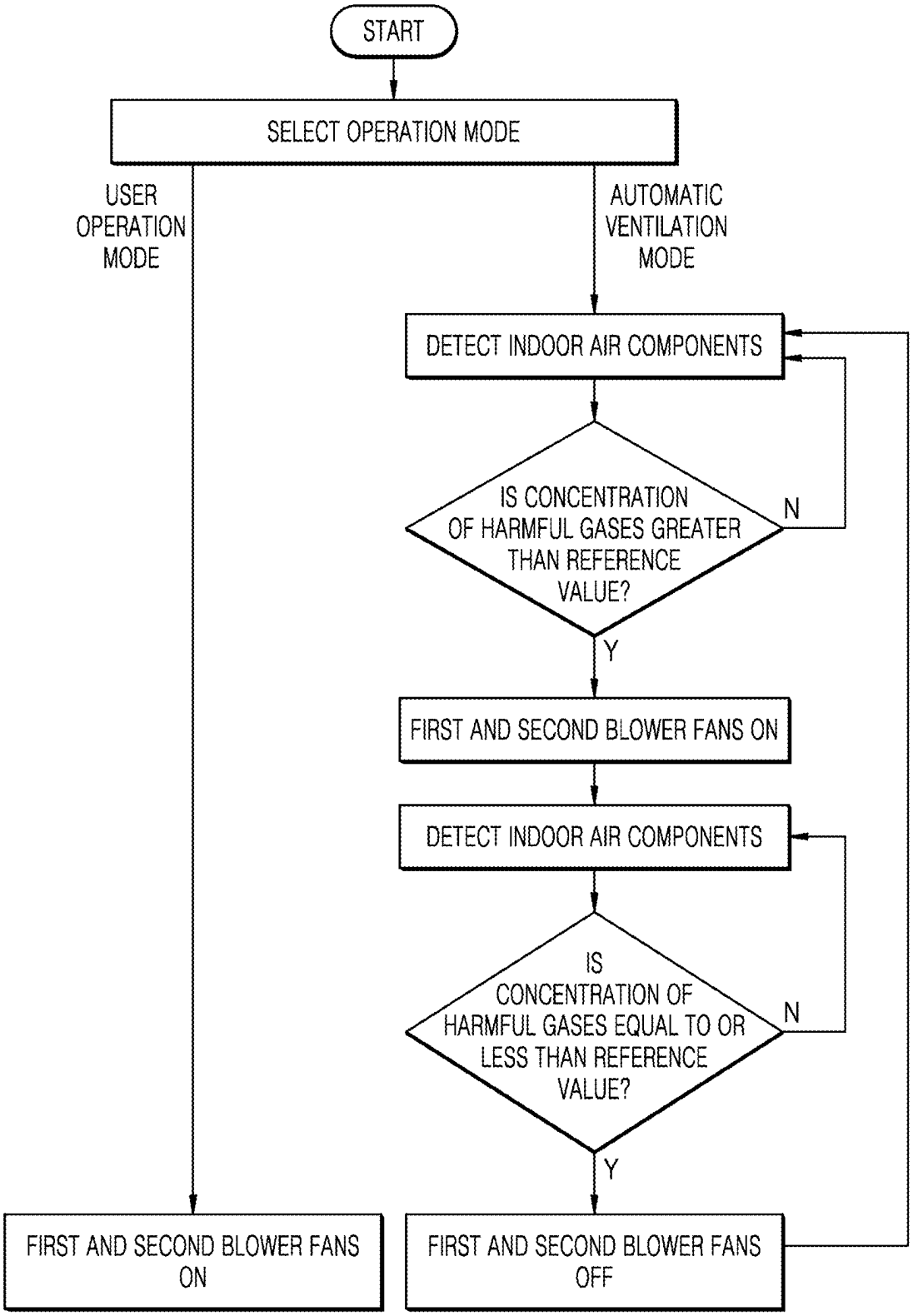
START
SELECT OPERATION MODE
USER OPERATION MODE
AUTOMATIC VENTILATION MODE
DETECT INDOOR AIR COMPONENTS
IS CONCENTRATION OF HARMFUL GASES GREATER THAN REFERENCE VALUE?
N
Y
FIRST AND SECOND BLOWER FANS ON
DETECT INDOOR AIR COMPONENTS
IS CONCENTRATION OF HARMFUL GASES EQUAL TO OR LESS THAN REFERENCE VALUE?
N
Y
FIRST AND SECOND BLOWER FANS ON
FIRST AND SECOND BLOWER FANS OFF

WINDOW-TYPE AIR CONDITIONER

CROSS-REFERENCE TO RELATED APPLICATIONS

[0001] This application is a continuation of International Application No. PCT/KR2023/016665 designating the United States, filed on Oct. 25, 2023, in the Korean Intellectual Property Receiving Office and claiming priority to Korean Patent Application No. 10-2023-0006315, filed on Jan. 16, 2023, in the Korean Intellectual Property Office, the disclosures of each of which are incorporated by reference herein in their entireties.

BACKGROUND

Field

[0002] The disclosure relates to a window-type air conditioner.

Description of Related Art

[0003] An air conditioner may include a compressor that compresses a refrigerant, a heat exchanger (condenser, evaporator) that induces heat exchange with the refrigerant, an expansion valve, and a blower that promotes heat exchange with the refrigerant.

[0004] Air conditioners may be classified into separated-type air conditioners in which an indoor unit and an outdoor unit are installed indoors and outdoors respectively, and window-type air conditioners in which the indoor unit and the outdoor unit are installed in a window frame.

[0005] If the air conditioner is operated for a long time, the indoor air quality may deteriorate, such as increasing the concentration of harmful gases such as CO_{-2}, so periodic ventilation may be necessary. However, if indoor air that has already been air-conditioned is released outdoors, the air conditioning energy efficiency may decrease.

SUMMARY

[0006] A window-type air conditioner according to an example embodiment includes a window-type air conditioner that may be installed in a window frame, and may include an outdoor module including a compressor that compresses a refrigerant, an outdoor heat exchanger in which heat exchange occurs between outdoor air and the refrigerant, and an outdoor housing that accommodates the compressor and the outdoor heat exchanger.

[0007] A window-type air conditioner according to an example embodiment may include: an indoor module including an indoor housing spaced apart from the outdoor housing and an indoor heat exchanger disposed inside the indoor housing and configured to exchange heat between indoor air and a refrigerant occurs.

[0008] A window-type air conditioner according to an example embodiment may include a connection module including a pipe arranged between the outdoor module and the indoor module configured to connect the outdoor module to the indoor module in a thickness direction of a window included in a window frame.

[0009] A window-type air conditioner according to an example embodiment may include: a connection module, comprising a refrigerant pipe configured to provide a path through which a refrigerant moves between an outdoor module and an indoor module, a discharge path configured to discharge indoor air to outdoors, and an suction path configured to discharge outdoor air into the indoor, and may include a total heat exchange module comprising a fan configured to perform indoor ventilation through heat exchange between the indoor air moving along the discharge path and the outdoor air moving along the suction path.

[0010] The air conditioner according to an example embodiment may be operated in a user operation mode and an automatic ventilation mode according to the user's selection.

[0011] An automatic ventilation method of an air conditioner according to an example embodiment may include: detecting indoor air components. The operation of detecting indoor air components may be an operation of detecting the concentration of harmful gases in indoor air.

[0012] In the automatic ventilation method of an air conditioner according to an example embodiment, a first blower fan and a second blower fan may be operated when the concentration of harmful gases of the indoor air components is greater than a reference value.

[0013] In the automatic ventilation method of an air conditioner according to an example embodiment, indoor air components may be detected and the operation of the first blower fan and the second blower fan may be stopped when the concentration of harmful gases of the indoor air components is equal to or less than a reference value.

BRIEF DESCRIPTION OF THE DRAWINGS

[0014] The above and other aspects, features and advantages of certain embodiments of the present disclosure will be more apparent from the following detailed description, taken in conjunction with the accompanying drawings, in which:

[0015] FIG. **1** is a perspective view illustrating an example window-type air conditioner arranged in a window frame according to various embodiments;

[0016] FIG. **2** is a perspective view illustrating an example window-type air conditioner installed in a window frame according to various embodiments;

[0017] FIG. **3** is a diagram illustrating an example configuration of a window-type air conditioner, according to various embodiments;

[0018] FIG. **4** is a perspective view illustrating an inner portion of a window-type air conditioner according to various embodiments;

[0019] FIG. **5** is an exploded perspective view of a window-type air conditioner according to various embodiments;

[0020] FIG. **6** is a diagram illustrating an example window-type air conditioner according to various embodiments;

[0021] FIG. **7** is a diagram illustrating a backflow prevention damper according to various embodiments;

[0022] FIG. **8**A is a perspective view illustrating an example window-type air conditioner according to various embodiments;

[0023] FIG. **8**B is a perspective view of a window-type air conditioner according to various embodiments;

[0024] FIG. **9** is a perspective view illustrating a temporary support portion according to various embodiments;

[0025] FIG. **10**A is a diagram illustrating a sealing member according to various embodiments;

[0026] FIG. **10**B is a diagram illustrating a sealing member according to various embodiments; and

[0027] FIG. **11** is a flowchart illustrating an example method of controlling a window-type air conditioner, according to various embodiments.

DETAILED DESCRIPTION

[0028] It should be understood that the various example embodiments of the present disclosure and the terminology used herein are not intended to limit the technical features described in the present disclosure to particular embodiments, but rather to encompass various modifications, equivalents, or alternatives of the various embodiments.

[0029] In connection with the description of the drawings, similar reference numerals may be used for similar or related components.

[0030] The singular form of a noun corresponding to an item may include one or more of said items, unless the context clearly indicates otherwise.

[0031] In the present disclosure, each of the phrases "A or B", "at least one of A and B", "at least one of A or B", "A, B, or C", "at least one of A, B, and C", and "at least one of A, B, or C" may include any one of the items listed together in that phrase, or all possible combinations of them.

[0032] The term "and/or" includes any combination of multiple related described elements or any one of multiple related described elements.

[0033] Terms such as "first", "second" may be used merely to distinguish one component from another, and do not limit the components in any other respect (e.g., importance or order).

[0034] When a component (e.g., a first component) is referred to as being "coupled" or "connected" to another component (e.g., a second component), with or without the terms "functionally" or "communicatively," the component may be connected to the other component directly (e.g., wired), wirelessly, or through a third component.

[0035] The terms "include" or "have" and the like are intended to specify the presence of a feature, number, step, operation, component, part, or combination thereof described in the present disclosure, but do not exclude the presence or addition of one or more other features, numbers, steps, operations, components, parts, or combinations thereof.

[0036] When a component is described as "connected," "coupled," "supported," or "is in contact" with another component, this includes not only cases where the components are directly connected, coupled, supported, or in contact, but also cases where the components are indirectly connected, coupled, supported, or in contact through a third component.

[0037] When a component is described as being "on" another component, this includes not only cases where the component is in contact with the other component, but also cases where there is another component between the two components.

[0038] An air conditioner according to various embodiments refers to a device that performs functions such as air purification, ventilation, humidity control, cooling, or heating in an air-conditioned space (hereinafter referred to as "indoor"), and may refer, for example, to a device including at least one of these functions.

[0039] According to an example embodiment, the air conditioner may include a heat pump device to perform a cooling function or a heating function. The heat pump device may include a refrigeration cycle in which a refrigerant is circulated along a compressor, a first heat exchanger, an expansion device, and a second heat exchanger. All components of the heat pump device may be housed in a single housing forming the exterior of the air conditioner, or some components of the heat pump device may be distributed and housed separately in a plurality of housings.

[0040] The air conditioner including the plurality of housings may include at least one outdoor unit installed outdoors and at least one indoor unit installed indoors. For example, an air conditioner may be configured to have one outdoor unit and one indoor unit connected to each other via a refrigerant pipe. For example, an air conditioner may be configured such that one outdoor unit is connected to two or more indoor units through a refrigerant pipe. For example, an air conditioner may be configured to have two or more outdoor units and two or more indoor units connected to each other through a plurality of refrigerant pipes.

[0041] The outdoor units may be electrically connected to the indoor units. For example, information (or commands) for controlling an air conditioner may be input through an input interface provided on an outdoor unit or an indoor unit, and the outdoor unit and the indoor unit may operate simultaneously or sequentially in response to a user input.

[0042] The air conditioner may include an outdoor heat exchanger provided in an outdoor unit, an indoor heat exchanger provided in an indoor unit, and a refrigerant pipe connecting the outdoor heat exchanger to the indoor heat exchanger.

[0043] The outdoor heat exchanger may perform heat exchange between a refrigerant and outdoor air using a phase change of the refrigerant (e.g., evaporation or condensation). For example, while the refrigerant is condensed in the outdoor heat exchanger, the refrigerant may release heat to the outdoor air, and while the refrigerant flowing in the outdoor heat exchanger evaporates, the refrigerant may absorb heat from the outdoor air.

[0044] The indoor unit is installed indoors. For example, the indoor unit may be classified into ceiling-mounted indoor units, stand-alone indoor units, and wall-mounted indoor units depending on how they are arranged. For example, the ceiling-type indoor units may be classified into 4-way indoor units, 1-way indoor units, and duct-type indoor units depending on the method by which air is discharged.

[0045] The indoor heat exchanger may perform heat exchange between a refrigerant and indoor air by utilizing a phase change of the refrigerant (e.g., evaporation or condensation). For example, while the refrigerant evaporates in the indoor unit, the refrigerant may absorb heat from the indoor air, and the indoors may be cooled by blowing the cooled indoor air through the cooled indoor heat exchanger. Additionally, while the refrigerant is condensed in the indoor heat exchanger, the refrigerant may release heat to the indoor air, and the indoor space may be heated by blowing the heated indoor air while passing through the high-temperature indoor heat exchanger.

[0046] For example, the air conditioner performs a cooling or heating function through a phase change process of a refrigerant circulating between the outdoor heat exchanger and the indoor heat exchanger. For this circulation of the refrigerant, the air conditioner may include a compressor that compresses the refrigerant. The compressor may suck in refrigerant gas through a suction portion and compress the refrigerant gas. The compressor may discharge high tem-

perature and high pressure refrigerant gas through a discharge portion. The compressor may be arranged inside the outdoor unit.

[0047] The refrigerant may be circulated through a refrigerant pipe in the order of a compressor, an outdoor heat exchanger, an expansion device, and an indoor heat exchanger, or in the order of a compressor, an indoor heat exchanger, an expansion device, and an outdoor heat exchanger.

[0048] For example, when one outdoor unit and one indoor unit are directly connected to each other through a refrigerant pipe, the air conditioner may be configured such that the refrigerant is circulated between one outdoor unit and one indoor unit through the refrigerant pipe.

[0049] For example, when one outdoor unit is connected to two or more indoor units through a refrigerant pipe, the refrigerant may flow into the plurality of indoor units through a refrigerant pipe branched off from the outdoor unit. The refrigerant discharged from the plurality of indoor units may be combined and circulated to the outdoor unit. For example, the plurality of indoor units may be directly connected in parallel to one outdoor unit through different refrigerant pipes.

[0050] The plurality of indoor units may be operated independently according to an operating mode set by a user. That is, some of the plurality of indoor units may operate in a cooling mode while others operate in a heating mode at the same time. Here, the refrigerant may be selectively introduced into each indoor unit at a high or low pressure along a designated flow path through a flow switching valve described later, and discharged to be circulated to the outdoor unit.

[0051] For example, when an air conditioner has two or more outdoor units and two or more indoor units connected to each other through a plurality of refrigerant pipes, refrigerants discharged from the plurality of outdoor units may join and flow through a single refrigerant pipe before branching off at some point and flowing into the plurality of indoor units.

[0052] The plurality of outdoor units may all be driven or at least some thereof may not be driven depending on the operating load according to the operating amount of the plurality of indoor units. The refrigerant may be arranged to be introduced into the outdoor unit and circulated through the flow path switching valve, which is selectively driven. The air conditioner may include an expansion device to reduce the pressure of a refrigerant entering a heat exchanger. For example, the expansion device may be arranged inside the indoor unit or inside the outdoor unit, or may be arranged in both.

[0053] The expansion device may lower the temperature and pressure of a refrigerant by, for example, utilizing the throttling effect. The expansion device may include an orifice capable of reducing a cross-sectional area of a flow path. A refrigerant passing through the orifice may have its temperature and pressure reduced.

[0054] The expansion device may be implemented as an electronic expansion valve, for example, capable of controlling an opening ratio (a ratio of a cross-sectional area of a valve's flow path in a partially open state to the cross-sectional area of the valve's flow path in a fully open state). The amount of refrigerant passing through the expansion device may be controlled depending on the opening ratio of the electronic expansion valve.

[0055] The air conditioner may further include a refrigerant flow path diverter valve disposed on the refrigerant flow path. A flow path switching valve may include, for example, a 4-way valve. The flow path switching valve may determine the flow path of the refrigerant depending on an operating mode of the indoor unit (e.g. cooling operation or heating operation). The flow path switching valve may be connected to the discharge portion of the compressor.

[0056] The air conditioner may include an accumulator. The accumulator may be connected to the suction portion of the compressor. The accumulator may receive low-temperature, low-pressure refrigerant that has been evaporated from an indoor heat exchanger or an outdoor heat exchanger.

[0057] The accumulator may separate a refrigerant liquid from a refrigerant gas when a refrigerant, which is a mixture of the refrigerant liquid and the refrigerant gas, is introduced, and provide, to the compressor, the refrigerant gas obtained by removing the refrigerant liquid from the refrigerant.

[0058] An outdoor fan may be provided adjacent to the outdoor heat exchanger. The outdoor fan may blow outdoor air to the outdoor heat exchanger to promote heat exchange between the refrigerant and the outdoor air.

[0059] The outdoor unit of the air conditioner may include at least one sensor. For example, an outdoor unit sensor may be provided as an environmental sensor. The outdoor unit sensor may be arranged at any location inside or outside the outdoor unit. For example, the outdoor unit sensor may include a temperature sensor for detecting air temperature around the outdoor unit, a humidity sensor for detecting air humidity around the outdoor unit, a refrigerant temperature sensor for detecting refrigerant temperature in refrigerant pipes passing through the outdoor unit, or a refrigerant pressure sensor for detecting refrigerant pressure in refrigerant pipes passing through the outdoor unit.

[0060] The outdoor unit of the air conditioner may include an outdoor unit communication unit. The outdoor unit communication unit may be provided to receive a control signal from a control unit of the indoor unit of the air conditioner, which will be described later. The outdoor unit may control the operation of a compressor, an outdoor heat exchanger, an expansion device, a flow path switching valve, an accumulator, or an outdoor fan, based on a control signal received through the outdoor unit communication unit. The outdoor unit may transmit a sensing value detected from the outdoor unit sensor to the control unit of the indoor unit through the outdoor unit communication unit.

[0061] The indoor unit of the air conditioner may include a housing, a blower for circulating air into or out of the housing, and an indoor heat exchanger for exchanging heat with air flowing into the interior of the housing.

[0062] The housing may include a suction port. Through the suction port, indoor air may be drawn into the interior of the housing.

[0063] The indoor unit of the air conditioner may include a filter provided to filter out foreign substances from the air flowing into the housing through the suction port.

[0064] The housing may include a discharge port. Air flowing inside the housing may be discharged out of the housing through the discharge port.

[0065] The housing of the indoor unit may be provided with an airflow guide that guides a direction of air discharged through the discharge port. For example, the airflow guide may include blades positioned on the discharge port.

For example, the airflow guide may include an auxiliary fan to regulate an exhaust airflow. The disclosure is not limited thereto, and the airflow guide may be omitted.

[0066] An indoor heat exchanger and a blower may be provided inside the housing of the indoor unit, which are arranged on a path connecting the suction port to the discharge port.

[0067] The blower may include an indoor fan and a fan motor. For example, the indoor fan may include an axial fan, a radial fan, a crossflow fan, and a centrifugal fan.

[0068] The indoor heat exchanger may be located between the blower and the exhaust, or between the suction port and the blower. The indoor heat exchanger may absorb heat from air brought in through the suction port or transfer heat to air brought in through the suction port. The indoor heat exchanger may include a heat exchange tube through which a refrigerant flows, and heat exchange fins in contact with the heat exchange tube to increase a heat transfer area.

[0069] The indoor unit of the air conditioner may include a drain tray disposed below the indoor heat exchanger to collect a condensate generated in the indoor heat exchanger. The condensate collected in the drain tray may be drained to the outside through a drain hose. The drain tray may be provided to support the indoor heat exchanger.

[0070] The indoor unit of the air conditioner may include an input interface. The input interface may include any type of user input means, including buttons, switches, a touch screen, and/or a touch pad. The user may directly input setting data (e.g., desired indoor temperature, operation mode setting for cooling/heating/dehumidification/air purification, outlet selection setting, and/or wind speed setting) through the input interface.

[0071] The input interface may also be connected to an external input device. For example, the input interface may be electrically connected to a wired remote controller. The wired remote controller may be installed in a certain location in a room (e.g., a section of a wall). A user may input setting data regarding the operation of the air conditioner by operating the wired remote controller. An electrical signal corresponding to the setting data obtained via the wired remote controller may be transmitted to the input interface. Additionally, the input interface may include an infrared sensor. The user may remotely input setting data regarding the operation of the air conditioner using the wireless remote controller. Setting data input via the wireless remote controller may be transmitted to the input interface as an infrared signal.

[0072] The input interface may include a microphone. The user's voice commands may be obtained through the microphone. The microphone may convert the user's voice commands into electrical signals and transmit the converted electrical signals to an indoor unit control unit. The indoor unit control unit may control the components of the air conditioner to execute functions corresponding to the user's voice commands. Setting data obtained through the input interface (e.g., desired indoor temperature, operation mode setting for cooling/heating/dehumidification/air purification, outlet selection setting, and/or wind speed setting) may be transmitted to the indoor unit control unit described below. In an example, setting data obtained through the input interface may be transmitted externally, e.g. to an outdoor unit or server, through an indoor unit communication unit described later.

[0073] The indoor unit of the air conditioner may include a power module. The power module may be connected to an external power source to supply power to the components of the indoor unit.

[0074] The indoor unit of the air conditioner may include an indoor unit sensor. The indoor unit sensor may be an environmental sensor arranged in a space inside or outside the housing. For example, the indoor unit sensor may include one or more temperature sensors and/or humidity sensors positioned in a certain space inside or outside the housing of the indoor unit. For example, the indoor unit sensor may include a refrigerant temperature sensor for detecting a refrigerant temperature of the refrigerant pipe passing through the indoor unit. For example, the indoor unit sensor may include respective refrigerant temperature sensors that detect the inlet, middle, and/or outlet temperatures of the refrigerant pipe passing through the indoor heat exchanger.

[0075] For example, each environmental information detected by the indoor unit sensor may be transmitted to the indoor unit control unit described later or transmitted externally through the indoor unit communication unit described later.

[0076] The indoor unit of the air conditioner may include the indoor unit communication unit. The indoor unit communication unit may include at least one of a short-range communication module or a long-range communication module. The indoor unit communication unit may include at least one antenna for wirelessly communicating with other devices. The outdoor unit may include an outdoor unit communications unit. The outdoor unit communication unit may also include at least one of a short-range communication module or a long-range communication module.

[0077] The short-range wireless communication module may include, but is not limited to, a Bluetooth communication module, a BLE (Bluetooth Low Energy) communication module, a Near Field Communication module, a WLAN (Wi-Fi) communication module, a Zigbee communication module, an infrared (IrDA, infrared Data Association) communication module, a WFD (Wi-Fi Direct) communication module, a UWB (ultrawideband) communication module, an Ant+communication module, a microwave (uWave) communication module, etc.

[0078] The long-distance communication module may include a communication module that performs various types of long-distance communication and may include a mobile communication unit. The mobile communication unit transmits and receives wireless signals with at least one of a base station, an external terminal, and a server on a mobile communication network.

[0079] The indoor unit communication unit may communicate with external devices such as servers, mobile devices, and other home appliances through surrounding access points (APs). An access point (AP) may connect a local area network (LAN) where an air conditioner or user device is connected to a wide area network (WAN) where a server is connected. The air conditioner or a user device may be connected to a server via a wide area network (WAN). The indoor unit of the air conditioner may include the indoor unit control unit that controls components of the indoor unit, including a blower, etc. The outdoor unit of the air conditioner may include an outdoor unit control unit that controls components of the outdoor unit, including a compressor, etc. The indoor unit control unit may communicate with the

outdoor unit control unit through the indoor unit communication unit and the outdoor unit communication unit. The outdoor unit communication unit may transmit a control signal generated by the outdoor unit control unit to the indoor unit communication unit, or may transmit a control signal transmitted from the indoor unit communication unit to the outdoor unit control unit. That is, the outdoor unit and the indoor unit may communicate in both directions. The outdoor unit and the indoor unit may transmit and receive various signals generated during the operation of the air conditioner.

[0080] The outdoor unit control unit may be electrically connected to the components of the outdoor unit and control the operation of each component. For example, the outdoor unit control unit may adjust a frequency of the compressor and control the flow path switching valve to convert a circulation direction of the refrigerant. The outdoor unit control unit may control a rotation speed of the outdoor fan. Additionally, the outdoor unit control unit may generate a control signal to adjust the opening of the expansion valve. Under the control by the outdoor unit control unit, the refrigerant may be circulated along a refrigerant circulation circuit including a compressor, a flow path switching valve, an outdoor heat exchanger, an expansion valve, and an indoor heat exchanger.

[0081] Various temperature sensors included in the outdoor unit and the indoor unit may transmit electrical signals corresponding to the detected temperature to the outdoor unit control unit and/or the indoor unit control unit. For example, humidity sensors included in the outdoor unit and the indoor unit may each transmit an electrical signal corresponding to the detected humidity to the outdoor unit control unit and/or the indoor unit control unit.

[0082] The indoor unit control unit may obtain an input (e.g., a user input) from a user device, including a mobile device, through the indoor unit communication unit, and may obtain a user input directly through an input interface or through a remote controller. The indoor unit control unit may control components of the indoor unit, including a blower, in response to a received user input. The indoor unit control unit may transmit information about the received user input to the outdoor unit control unit of the outdoor unit.

[0083] The outdoor unit control unit may control the components of the outdoor unit, including the compressor, based on the information about the user input received from the indoor unit. For example, when a control signal corresponding to a user input for selecting an operation mode such as a cooling operation, a heating operation, a ventilation operation, a defrosting operation, or a dehumidifying operation is received from the indoor unit, the outdoor unit control unit may control the components of the outdoor unit so that the operation of the air conditioner corresponding to the selected operation mode is performed.

[0084] The outdoor unit control unit and the indoor unit control unit may each include a processor and a memory. The indoor unit control unit may include at least one first processor and at least one first memory, and the outdoor unit control unit may include at least one second processor and at least one second memory.

[0085] The memory may remember/store various information necessary for the operation of the air conditioner. The memory may store instructions, applications, data and/or programs necessary for the operation of the air conditioner. For example, the memory may store various programs for a cooling operation, a heating operation, a dehumidifying operation and/or a defrosting operation of the air conditioner. Memory may include volatile memory such as Static Random Access Memory (S-RAM) and Dynamic Random Access Memory (D-RAM) for temporarily storing data. Additionally, the memory may include non-volatile memory such as Read Only Memory (ROM), Erasable Programmable Read Only Memory (EPROM), and Electrically Erasable Programmable Read Only Memory (EEPROM) for long-term storage of data.

[0086] The processor may include various processing circuitry and generate control signals for controlling operation of the air conditioner based on instructions, applications, data and/or programs stored in the memory. The processor is hardware that may include logic circuits and arithmetic circuits. The processor may process data according to a program and/or instruction provided from the memory, and generate control signals according to processing results. The memory and the processor may be implemented as a single control circuit or as a plurality of circuits.

[0087] The indoor unit of the air conditioner may include an output interface. The output interface may be electrically connected to the indoor unit control unit and output information related to the operation of the air conditioner under the control by the indoor unit control unit. For example, information such as operation mode, wind direction, wind speed, and temperature selected by a user input may be output. Additionally, the output interface may output sensing information and warning/error messages obtained from the indoor unit sensor or the outdoor unit sensor.

[0088] The output interface may include a display and a speaker. The speaker is an audio device that may output various sounds. The display may display information input by a user or information provided to the user using various graphic elements. For example, operation information of the air conditioner may be displayed as at least one of an image or text. Additionally, the display may include indicators that provide certain information. The display may include an LCD panel (Liquid Crystal Display Panel), an LED panel (Light Emitting Diode Panel), an OLED panel (Organic Light Emitting Diode Panel), a micro LED panel, and/or a plurality of LEDs.

[0089] Hereinafter, a window-type air conditioner according to various example embodiments will be described in greater detail with reference to the drawings.

[0090] FIG. **1** is a perspective view illustrating an example window-type air conditioner arranged in a window frame according to various embodiments. FIG. **2** is a perspective view illustrating an example window-type air conditioner installed in a window frame according to various embodiments.

[0091] Referring to FIGS. **1** and **2**, a window-type air conditioner **10** according to an example embodiment may be installed in a window frame **1** and perform a function of providing cooling to an indoor space. The window frame **1** in which the window-type air conditioner **10** is installed may be a frame that supports a window **11** to be slidable. The window-type air conditioner **10** may be installed in the window frame **1** by placing the window-type air conditioner **10** to hang over the window frame **1**.

[0092] The window-type air conditioner **10** may be arranged on the window frame **1** and then fixed by a fixing member (**81**; see FIG. **10**) to be described later. A sealing member **70** may be positioned on the window-type air

conditioner **10**. The sealing member (e.g., a seal) **70** may provide insulation to the indoor space. The sealing member **70** may prevent and/or reduce or block outdoor air from directly flowing into the indoor space.

[0093] The window-type air conditioner **10** may include an outdoor module **20** and an indoor module **30**. The outdoor module **20** may be located outdoors with respect to the window frame **1**. The indoor module **30** may be positioned indoors with respect to the window frame **1**.

[0094] FIG. **3** is a diagram illustrating an example configuration of a window-type air conditioner, according to various embodiments. FIG. **4** is a perspective view illustrating an inner portion of a window-type air conditioner according to various embodiments.

[0095] Referring to FIGS. **3** and **4**, the window-type air conditioner **10** according to an example embodiment may include a compressor **25**, an outdoor heat exchanger **26**, an expander **27**, and an indoor heat exchanger **36**.

[0096] The outdoor module **20** according to an example embodiment may include an outdoor housing **21**. The outdoor housing **21** may accommodate the compressor **25**, the outdoor heat exchanger **26**, and the expander **27**. The indoor module **30** may include an indoor housing **31**. The indoor housing **31** may accommodate an indoor fan **34** and an indoor heat exchanger **36**.

[0097] The outdoor housing **21** may be separated from the indoor housing **31**. The outdoor housing **21** may be spaced apart from the indoor housing **31**. The outdoor housing **21** may have various shapes. For example, an upper surface of the outdoor housing **21** may be inclined to allow rainwater, etc. to easily flow down. However, the shape of the outdoor housing **21** is not limited thereto.

[0098] Although the expander **27** is not shown in FIG. **4**, the expander **27** may be accommodated inside the outdoor housing **21** or the indoor housing **31**.

[0099] The compressor **25** may compress a refrigerant. The compressor **25** may compress the refrigerant in a gaseous state. The refrigerant in a gaseous state may be converted from a low temperature and low pressure state to a high temperature and high pressure state while being compressed by the compressor **25**.

[0100] In the outdoor heat exchanger **26**, heat exchange between the refrigerant and the outdoor air may occur. The outdoor heat exchanger **26** and the compressor **25** may be connected to each other to allow movement of the refrigerant. In the outdoor heat exchanger **26**, the high temperature and high pressure refrigerant delivered from the compressor **25** may be condensed, and while the refrigerant is condensed, the refrigerant may release heat to the outdoor air.

[0101] The outdoor fan **24** may be provided near the outdoor heat exchanger **26**. The outdoor fan **24** may blow outdoor air to the outdoor heat exchanger **26** to promote heat exchange between the refrigerant and the outdoor air.

[0102] The expander **27** may lower the pressure and temperature of the refrigerant condensed in the outdoor heat exchanger **26**. The expander **27** and the outdoor heat exchanger **26** are connected to each other so that the refrigerant may move therebetween. For example, the expander **27** may lower the pressure and temperature of the refrigerant by utilizing the throttling effect. For example, the expander **27** may lower the pressure and temperature of the refrigerant using an orifice.

[0103] In the indoor heat exchanger **36**, heat exchange between the refrigerant and indoor air may occur. The indoor heat exchanger **36** and the expander **27** are connected to each other such that the refrigerant may move therebetween. In the indoor heat exchanger **36**, a low-temperature and low-pressure refrigerant may evaporate. As the refrigerant evaporates, the refrigerant may absorb heat from the indoor air.

[0104] The indoor fan **34** may be provided near the indoor heat exchanger **36**. The indoor fan **34** may blow indoor air to the indoor heat exchanger **36** to promote heat exchange between the refrigerant and the indoor air.

[0105] The refrigerant passing through the indoor heat exchanger **36** may be in a low temperature and low pressure state. The low temperature and low pressure refrigerant may be delivered to the compressor **25**. Accordingly, the above-described process may be repeated.

[0106] As described above, while the window-type air conditioner **10** is operating, the refrigerant moves along a refrigerant pipe **90**, and the indoor air is cooled while the refrigerant evaporates in the indoor heat exchanger **36**, and heat may be released while the refrigerant is condensed in the outdoor heat exchanger **26**. The refrigerant pipe **90** may provide a path for the refrigerant to move between the outdoor module **20** and the indoor module **30**.

[0107] During the long-term cooling or heating process by the window-type air conditioner **10**, the indoor air quality may deteriorate, for example, an increase in the indoor carbon dioxide concentration. However, if the window is opened periodically for ventilation to prevent and/or reduce deterioration of indoor air quality, the cooling or heating efficiency of the window-type air conditioner **10** may decrease.

[0108] Taking these points into consideration, the window-type air conditioner **10** according to an embodiment may further include a component that may reduce heat loss while performing indoor ventilation.

[0109] FIG. **5** is an exploded perspective view of a window-type air conditioner according to various embodiments. FIG. **6** is a perspective view of a window-type air conditioner according to various embodiments.

[0110] Referring to FIGS. **1**, **2**, **5**, and **6**, a window-type air conditioner according to an example embodiment may include a connection module **60**. The connection module **60** may have a function of connecting the outdoor module **20** and the indoor module **30**. The connection module **60** may be arranged between the outdoor module **20** and the indoor module **30** to connect the outdoor module **20** to the indoor module **30** in a thickness direction of the window **11** included in the window frame **1**. The thickness direction of the window **11** may be a direction connecting the interior and exterior. The thickness direction of the window **11** may be a direction perpendicular to a surface formed by the window **11**. However, the thickness direction of the window **11** is not limited to the above description.

[0111] The connection module **60** may include the refrigerant pipe **90**. The refrigerant pipe **90** may have a function of connecting the outdoor module **20** to the indoor module **30**. The connection module **60** may include a total heat exchange module **40**. The total heat exchange module **40** may have a function of connecting the outdoor module **20** to the indoor module **30**.

[0112] The total heat exchange module **40** according to an example embodiment may provide ventilation indoors. The total heat exchange module **40** may discharge indoor air to outdoors. The total heat exchange module **40** may draw

outdoor air to indoors. The total heat exchange module **40** may provide a discharge path R**1** for discharging indoor air to outdoors. The total heat exchange module **40** may provide a suction path R**2** that draws outdoor air to indoors. There may be an intersection area between the discharge path R**1** and the suction path R**2**. The total heat exchange module **40** may perform indoor ventilation through heat exchange between indoor air moving along the discharge path R**1** and outdoor air moving along the suction path R**2**.

[0113] The total heat exchange module **40** may include an indoor air suction port **61**, an indoor air discharge port **62**, an outdoor air suction port **63**, and an outdoor air discharge port **64**. The total heat exchange module **40** may suck in indoor air through the indoor air suction port **61** and discharge the same through the indoor air discharge port **62**. The total heat exchange module **40** may suck in outdoor air through the outdoor air suction port **63** and discharge the same through the outdoor air discharge port **64**.

[0114] The indoor air suction port **61** and the outdoor air discharge port **64** may be arranged in the indoor housing **31**. The outdoor air suction port **63** and the indoor air discharge port **62** may be arranged in the outdoor housing **21**. The total heat exchange module **40** may have a function of connecting the outdoor module **20** to the indoor module **30**.

[0115] The outdoor air suction port **63** and the outdoor air discharge port **64** may form a portion of the exterior of the outdoor housing **21** on the outdoor module **20**.

[0116] The outdoor housing **21** may include a first sub-housing **211**, a second sub-housing **212**, and a third sub-housing **213**. The first sub-housing **211** may refer to a housing area that forms the exterior of the outdoor module **20**. The second sub-housing **212** may refer to a duct forming the exterior of the indoor air discharge port **62** or a housing area forming the exterior of the indoor air discharge port **62**. The third sub-housing **213** may refer to a duct forming the exterior of the outdoor air suction port **63** or a housing area forming the exterior of the outdoor air suction port **63**. The first sub-housing **211**, the second sub-housing **212**, and the third sub-housing **213** may together form a smooth appearance or surface.

[0117] The outdoor air discharge port **64** and the indoor air suction port **61** may form portions of the exterior of the indoor housing **31** on the indoor module **30**.

[0118] The indoor housing **31** may include a fourth sub-housing **311**, a fifth sub-housing **312**, and a sixth sub-housing **313**. The fourth sub-housing **311** may refer to a housing area that forms the exterior of the indoor module **30**. The fifth sub-housing **312** may refer to a duct forming the exterior of the outdoor air discharge port **64** or a housing area forming the exterior of the outdoor air discharge port **64**. The sixth sub-housing **313** may refer to a duct forming the exterior of the indoor air suction port **61** or a housing area forming the exterior of the indoor air suction port **61**. The fourth sub-housing **311**, the fifth sub-housing **312**, and the sixth sub-housing **313** may together form a smooth appearance or surface.

[0119] The indoor air suction port **61** may be arranged below the outdoor air discharge port **64** on the indoor housing **31**. The sixth sub-housing **313** may be arranged below the fifth sub-housing **312** on the fourth sub-housing **311**. The outdoor air suction port **63** may be arranged below the indoor air discharge port **62** on the outdoor housing **21**. The third sub-housing **213** may be arranged below the second sub-housing **212** on the first sub-housing **211**. Harmful gases that the indoor air suction port **61** suctions for ventilation may contain particles that are heavier than air. If the indoor air suction port **61** is arranged below the outdoor air discharge port **64**, indoor harmful gases may be easily discharged outdoors. However, the arrangement of the indoor air suction port **61**, the indoor air discharge port **62**, the outdoor air suction port **63**, and the outdoor air discharge port **64** and the arrangement of the first sub-housing **211**, the second sub-housing **212**, the third sub-housing **213**, the fourth sub-housing **311**, the fifth sub-housing **312**, and the sixth sub-housing **313** are not limited thereto.

[0120] The total heat exchange module **40** may include a total heat exchange element **41**. The total heat exchange element **41** may induce heat exchange between a plurality of air streams passing through a plurality of paths. The total heat exchange element **41** may induce humidity exchange along with heat exchange.

[0121] The total heat exchange element **41** may be arranged at a point where the discharge path R**1** and the suction path R**2** intersect each other. The total heat exchange element **41** may induce heat exchange between outdoor air and indoor air at the point where the discharge path R**1** and the suction path R**2** intersect each other. For example, air discharged from indoors to outdoors through the discharge path R**1** may have a lower temperature than the air suctioned from outdoors to indoors through the suction path R**2**. In this case, the air discharged from indoors to outdoors through the discharge path R**1** may receive heat energy from air suctioned indoors through the suction path R**2** from outdoors through the total heat exchange element **41**. For example, the air discharged from indoors to outdoors through discharge path R**1** may have lower humidity than air suctioned from outdoors to indoors through the suction path R**2**. In this case, the air discharged from indoors to outdoors through the discharge path R**1** may receive, through the total heat exchange element **41**, moisture from the air suctioned indoors through the suction path R**2** from outdoors. In this case, the air suctioned indoors from outdoors through the suction path R**2** may be supplied indoors with a lower temperature and humidity. In this case, even if ventilation is performed, the cooling efficiency of the window-type air conditioner **10** may be maintained.

[0122] The total heat exchange element **41** may include a first surface **411**, a second surface **412**, a third surface **413**, and a fourth surface **414**. The first surface **411** may be a surface through which indoor air sucked in through the indoor air suction port **61** enters the total heat exchange element **41** through the discharge path R**1**. The second surface **412** may be a surface through which indoor air sucked in through the indoor air suction port **61** escapes from the total heat exchange element **41** through the discharge path R**1**. The third surface **413** may be a surface through which outdoor air sucked in through the outdoor air suction port **63** enters the total heat exchange element **41** through the suction path R**2**. The fourth surface **414** may be a surface through which outdoor air sucked in through the outdoor air suction port **63** escapes from the total heat exchange element **41** through the suction path R**2**.

[0123] The indoor air discharged through the discharge path R**1** may have a higher temperature and humidity on the second surface **412** than on the first surface **411**. The outdoor air sucked in through the suction path R**2** may have a lower temperature and humidity at the fourth surface **414** than at the third surface **413**.

[0124] The total heat exchange module **40** may include a plurality of ducts **50**. The ducts **50** may include a first duct **51**, a second duct **52**, a third duct **53**, and a fourth duct **54**. The first duct **51** may connect the first surface **411** to the indoor air suction port **61** and form a portion of the discharge path R**1**. The second duct **52** may connect the second surface **412** to the indoor air discharge port **62** and form a portion of the discharge path R**1**. The third duct **53** may connect the third surface **413** to the outdoor air suction port **63** may form a portion of the suction path R**2**. The fourth duct **54** may connect the fourth surface **414** to the outdoor air discharge port **64** and form a portion of the suction path R**2**.

[0125] The total heat exchange element **41** may be arranged between the indoor housing **31** and the outdoor housing **21**. The total heat exchange element **41** may be arranged between the outdoor module **20** and the indoor module **30**. The total heat exchange element **41** may be surrounded by the plurality of ducts **50**. The first duct **51**, the second duct **52**, the third duct **53**, and the fourth duct **54** may surround the total heat exchange element **41**.

[0126] The discharge path R**1** and the suction path R**2** may intersect each other such that heat exchange occurs on the total heat exchange element **41**. When the plurality of ducts **50** are arranged vertically, the total heat exchange element **41** may be arranged vertically on the total heat exchange module **40**. When the total heat exchange element **41** is arranged vertically on the total heat exchange module **40**, a width of the total heat exchange module **40** may be reduced. When the width of the total heat exchange module **40** is reduced, the window **11** of the window frame **1** may be closed more.

[0127] The total heat exchange element **41** may be arranged to vertically overlap the refrigerant pipe **90**. In other words, when viewed from above the window-type air conditioner **10**, the total heat exchange element **41** and the refrigerant pipe **90** may overlap each other.

[0128] The first duct **51** may be arranged below the fourth duct **54**. The third duct **53** may be arranged below the second duct **52**. Harmful gases discharged through the first duct **51** through the discharge path R**1** for ventilation may contain particles heavier than air. When the first duct **51** is arranged below the fourth duct **54**, indoor harmful gases may be easily discharged outdoors. However, the arrangement of the first duct **51**, the second duct **52**, the third duct **53**, and the fourth duct **54** is not limited thereto.

[0129] The window-type air conditioner **10** according to an example embodiment may include the connection module **60** accommodating the first duct **51**, the second duct **52**, the third duct **53**, the fourth duct **54**, the refrigerant pipe **90**, and the total heat exchange element **41**, and connecting the outdoor module **20** to the indoor module **30**. The connection module **60** may include a connection cover **65**. The connection cover **65** may comprise the exterior of the total heat exchange module **40**.

[0130] The connection cover **65** may include a side cover **651**, an upper cover **652**, and a lower cover **653**. The side cover **651** may cover sides of the total heat exchange module **40**.

[0131] The upper cover **652** may cover an upper portion of the total heat exchange module **40**. The upper cover **652** may have a width WO equal to a width of the plurality of ducts **50**. A width WC of the upper cover **652** may be the width of the total heat exchange module **40**. The width WO of the upper cover **652** may be narrower than the width WO of the outdoor module **20** and a width WI of the indoor module **30**. When the width WO of the upper cover **652** is relatively narrow, the window **11** of the window frame **1** may be closed more. The upper cover **652** may have a shape of an English capital letter I when viewed from above from the window-type air conditioner **10**. However, the shape of the upper cover **652** is not limited thereto.

[0132] The lower cover **653** may have a bottom surface **650**. The bottom surface **650** of the lower cover **653** may be positioned higher than a bottom surface **200** of the outdoor module **20** and a bottom surface **300** of the indoor module **30**. When the bottom surface **650** of the lower cover **653** is positioned higher than the bottom surface **200** of the outdoor module **20** and the bottom surface **300** of the indoor module **30**, the window-type air conditioner **10** may be easily arranged in the window frame **1**. However, the shape of the bottom surface **650** of the lower cover **653** is not limited thereto.

[0133] FIG. **7** is a diagram illustrating an example backflow prevention damper according to various embodiments.

[0134] Referring to FIGS. **5**, **6** and **7**, at least some of the plurality of ducts **50** of the total heat exchange module **40** according to an example embodiment may include a backflow prevention damper **55**. The backflow prevention damper **55** may be configured to prevent backflow of air in the discharge path R**1** and the suction path R**2**.

[0135] The backflow prevention damper **55** may allow air to flow in a forward direction **551** and block air from flowing in a reverse direction **552**. The backflow prevention damper **55** may open a blocking membrane **553** when air flows in the forward direction **551**. The blocking membrane **553** may block the flow of air by being caught on a catch portion **554** when the air flows in the reverse direction **552**. However, the shape of the backflow prevention damper **55** and a direction of the air flow are examples and are not limited by the above description.

[0136] The total heat exchange module **40** according to an example embodiment may include a dust filter **43** provided in at least one of the discharge path R**1** and the suction path R**2**. The dust filter **43** may collect dust in the air passing through the discharge path R**1** and the suction path R**2**. The dust filter **43** may prevent and/or reduce the function of the total heat exchange element **41** from being deteriorated by dust. The dust filter **43** may be arranged on the first surface **411** and the third surface **413**. However, the arrangement and function of the dust filter **43** are not limited by the above description.

[0137] The total heat exchange module **40** according to an example embodiment may include a first blower fan **620** on the discharge path R**1**. The indoor air discharge port **62** may include the first blower fan **620**. However, the arrangement of the first blower fan **620** is not limited thereto. For example, the indoor air suction port **61**, the second duct **52** or the first duct **51** may include the first blower fan **620**.

[0138] The total heat exchange module **40** according to an example embodiment may include a second blower fan **640** that generates air flow along the suction path R**2**. The outdoor air discharge port **64** may include the second blower fan **640**. However, the arrangement of the second blower fan **640** is not limited thereto. For example, the outdoor air suction port **63**, the third duct **53** or the fourth duct **54** may include the second blower fan **640**.

[0139] FIG. **8**A is a perspective view illustrating an example window-type air conditioner according to various

embodiments. FIG. **8**B is a perspective view illustrating an example window-type air conditioner according to various embodiments.

[0140] Referring to FIGS. **1**, **2**, **8**A, and **8**B, the shape of the window frame **1** on which the window-type air conditioner **10** according to an example embodiment may be installed may vary. When installing the window-type air conditioner **10** in the window frame **1**, a minimum distance that is to be separated between the outdoor module **20** and the indoor module **30** for efficient installation may vary depending on the shape of the window frame **1**.

[0141] A width or thickness of the window **11** on which the window-type air conditioner **10** according to an example embodiment may be installed may vary. When installing the window-type air conditioner **10** in the window frame **1**, the minimum distance that is to be separated between the outdoor module **20** and the indoor module **30** for efficient installation may vary depending on the shape of the window **11**.

[0142] When a distance between the outdoor module **20** and the indoor module **30** of the window-type air conditioner **10** may be variably adjusted, it may be helpful for efficient installation according to the shapes of the window frame **1** and the window **11** of the window-type air conditioner **10**. The above efficient installation may be an installation that allows the window **11** to be closed more in the window frame **1** compared to a case where the distance between the outdoor module **20** and the indoor module **30** is not variably adjustable.

[0143] The total heat exchange module **40** according to an example embodiment may include a length-adjustable structure so that a distance between the outdoor housing **21** and the indoor housing **31** is variable. At least some of the plurality of ducts **50** may include a length-adjustable structure so that the distance between the outdoor module **20** and the indoor module **30** may be varied.

[0144] At least some of the plurality of ducts **50** may include a bellows structure **58** including a plurality of pleats **580**. The bellows structure **58** may be length-adjustable according to the degree of folding of the plurality of pleats **580**.

[0145] The refrigerant pipe **90** according to an example embodiment may include flexible piping. The shape of the refrigerant pipe **90** may be changed as a gap between the outdoor module **20** and the indoor module **30** is adjusted.

[0146] The total heat exchange element **41** of the total heat exchange module **40** according to an example embodiment may be fixed to the outdoor housing **21** or the indoor housing **31**. The total heat exchange element **41** being fixed to the outdoor housing **21** or the indoor housing **31** may indicate that an area thereof other than the first surface **411**, the second surface **412**, the third surface **413**, and the fourth surface **414** is fixed. If the total heat exchange element **41** is fixed to the outdoor housing **21** or the indoor housing **31**, a more stable structure of the ducts **50** may be provided. However, the arrangement of the total heat exchange element **41** is not limited thereto.

[0147] FIG. **9** is a perspective view illustrating a temporary support portion according to various embodiments.

[0148] Referring to FIG. **9**, a window-type air conditioner **10** according to an example embodiment may include a temporary support portion **80**. The connection module **60** may include the temporary support portion **80**. The temporary support portion **80** may be configured to fix the distance between the outdoor module **20** and the indoor module **30**. The temporary support portion **80** may support the indoor module **30** and the outdoor module **20**. The temporary support portion **80** may be removed before the window-type air conditioner **10** is installed in the window frame **1**.

[0149] FIG. **10**A is a diagram illustrating an example sealing member according to various embodiments. FIG. **10**B is a diagram illustrating an example sealing member according to various embodiments.

[0150] Referring to FIGS. **2**, **10**A, and **10**B, the window-type air conditioner **10** according to an example embodiment may include a sealing member **70**. The sealing member **70** may provide insulation between the interior and exterior after the window-type air conditioner **10** is installed. The sealing member **70** may include a catch groove **71**. The catch groove **71** may be coupled to the frame of the window frame **1**.

[0151] The window-type air conditioner **10** according to an example embodiment may include a fixing member **81**. The fixing member **81** may have a function of fixing the window-type air conditioner **10** to the window frame **1**.

[0152] FIG. **11** is a flowchart illustrating an example method of controlling a window-type air conditioner, according to an example embodiment.

[0153] Referring to FIGS. **8**A, **8**B, and **11**, a ventilation control method of the window-type air conditioner **10** according to an example embodiment may include an automatic ventilation mode and a user operation mode. In the user operation mode, indoor air may be ventilated by operating the first blower fan **620** and the second blower fan **640**. In the automatic ventilation mode, indoor air components may be detected to determine whether to operate the first blower fan **620** and the second blower fan **640**. By detecting indoor air components, if the concentration of harmful gases of the indoor air components is greater than a reference value, the first blower fan **620** and the second blower fan **640** may be operated. The automatic ventilation mode may detect indoor air components again after the first blower fan **620** and the second blower fan **640** have operated. By detecting indoor air components, if the concentration of harmful gases of the indoor air components is equal to or less than the reference value, the operation of the first blower fan **620** and the second blower fan **640** may be stopped. Using the above method, in the automatic ventilation mode, the concentration of harmful gases in indoor air may be maintained at or below a certain level while minimizing/reducing the operation of the first blower fan **620** and the second blower fan **640**.

[0154] The air conditioner according to an example embodiment may be operated in a user operation mode and an automatic ventilation mode according to the user's selection.

[0155] An automatic ventilation method of an air conditioner according to an example embodiment may include an operation of detecting indoor air components. The operation of detecting indoor air components may be an operation of detecting the concentration of harmful gases in indoor air.

[0156] In the automatic ventilation method of an air conditioner, according to an example embodiment, the first blower fan **620** and the second blower fan **640** may be operated when the concentration of harmful gases of the indoor air components is greater than the reference value.

[0157] In the automatic ventilation method of an air conditioner, according to an example embodiment, indoor air

components may be detected, and when the concentration of harmful gases of the indoor air components is equal to or less than the reference value, the operation of the first blower fan **620** and the second blower fan **640** may be stopped.

[0158] The various embodiments described above are merely examples, and it will be apparent to one skilled in the art that various modifications and equivalent embodiments may be made from the above-described example embodiments. Therefore, the true technical protection scope according to example embodiments should be determined by the technical idea of the disclosure described in the following claims.

[0159] A window-type air conditioner according to an example embodiment may be a window-type air conditioner that may be installed on a window frame and include: an outdoor module including a compressor that compresses a refrigerant, an outdoor heat exchanger in which heat exchange occurs between outdoor air and the refrigerant, and an outdoor housing that accommodates the compressor and the outdoor heat exchanger; an indoor module including an indoor housing spaced apart from the outdoor housing, and an indoor heat exchanger which is disposed inside the indoor housing and in which heat exchange between indoor air and the refrigerant occurs; and a connection module arranged between the outdoor module and the indoor module to connect the outdoor module to the indoor module in a thickness direction of a window included in the window frame, wherein the connection module includes a refrigerant pipe that provides a path for the refrigerant to move between the outdoor module and the indoor module, and a total heat exchange module that provides a discharge path for discharging indoor air to outdoors and a suction path for suctioning outdoor air to indoors, and performs indoor ventilation through heat exchange between the indoor air moving along the discharge path and the outdoor air moving along the suction path.

[0160] The total heat exchange module may include, to induce heat exchange between the indoor air and the outdoor air, a total heat exchange element that makes the suction path and the discharge path intersect with each other, and the total heat exchange element has a first surface through which the indoor air is introduced, a second surface through which the indoor air is discharged, a third surface through which the outdoor air is introduced, and a fourth surface through which the outdoor air is discharged, the total heat exchange module may include, in the indoor housing, an indoor air suction port through which the indoor air is sucked in and an outdoor air discharge port through which the outdoor air is discharged, and include, in the outdoor housing, an outdoor air suction port through which the outdoor air is sucked in and an indoor air discharge port through which the indoor air is discharged, and include a first duct connecting the first surface to the indoor air suction port, a second duct connecting the second surface to the indoor air discharge port, a third duct connecting the third surface to the outdoor air suction port, and a fourth duct connecting the fourth surface to the outdoor air discharge port. The first duct may be arranged below the fourth duct, and the third duct may be arranged below the second duct.

[0161] In order that a distance between the outdoor housing and the indoor housing is variable, at least some of the first duct, the second duct, the third duct, and the fourth duct may have a length-adjustable structure.

[0162] The length-adjustable structure may include a bellows structure including a plurality of pleats.

[0163] The total heat exchange element may be arranged to vertically overlap the refrigerant pipe.

[0164] The total heat exchange element may be fixed to the outdoor housing or the indoor housing.

[0165] The window-type air conditioner may further include a connection cover that accommodates the first duct, the second duct, the third duct, the fourth duct, the refrigerant pipe and the total heat exchange element and connects the outdoor module to the indoor module.

[0166] A width of the connection cover may be smaller than each of a width of the indoor module and a width of the outdoor module.

[0167] The total heat exchange element may be arranged between the indoor housing and the outdoor housing.

[0168] The outdoor air discharge port may include a second blower fan that generates an air flow along the suction path, and the indoor air discharge port may include a first blower fan that generates an air flow along the discharge path.

[0169] The indoor air suction port and the outdoor air discharge port may include a portion of the exterior of the indoor module, and the indoor air suction port and the outdoor air discharge port may be smoothly coupled along a surface of the indoor housing, and the outdoor air suction port and the indoor air discharge port may include a portion of the exterior of the outdoor module, and the outdoor air suction port and the indoor air discharge port may be smoothly coupled along a surface of the outdoor housing.

[0170] A bottom surface of the connection cover may be positioned higher than a bottom surface of the outdoor module and a bottom surface of the indoor module.

[0171] In order to prevent and/or reduce backflow of air in the discharge path and the suction path, at least some of the first duct, the second duct, the third duct, and the fourth duct may include a backflow prevention damper.

[0172] The window-type air conditioner may further include a temporary support portion that supports the indoor module and the outdoor module and is removed before the window-type air conditioner is installed on the window frame.

[0173] The window-type air conditioner according to an example embodiment may provide a ventilation function independently in addition to an air conditioning function.

[0174] The window-type air conditioner according to an example embodiment may increase the energy efficiency of air conditioning by discharging already conditioned indoor air to the outside and sucking in outside air while lowering the temperature and humidity of the outdoor air through total heat exchange.

[0175] The window-type air conditioner according to an example embodiment may prevent and/or reduce a total heat exchange element from being degraded by dust.

[0176] The window-type air conditioner according to an example embodiment may prevent and/or reduce air from flowing backwards when a ventilation function is not in use.

[0177] The window-type air conditioner according to an example embodiment may close the window of the window frame more, thereby increasing the insulation efficiency.

[0178] According to the window-type air conditioner according to an example embodiment, a gap between the indoor module and the outdoor module may be adjusted.

[0179] While the disclosure has been illustrated and described with reference to various example embodiments, it will be understood that the various example embodiments are intended to be illustrative, not limiting. It will be further understood by those skilled in the art that various modifications, alternatives and/or variations of the various example embodiments may be made without departing from the true technical spirit and full technical scope of the disclosure, including the appended claims and their equivalents. It will also be understood that any of the embodiment(s) described herein may be used in conjunction with any other embodiment(s) described herein.

What is claimed is:

1. A window-type air conditioner configured to be installed in a window frame, the window-type air conditioner comprising:

an outdoor module including a compressor configured to compress a refrigerant, an outdoor heat exchanger configured to perform heat exchange between outdoor air and the refrigerant, and an outdoor housing accommodating the compressor and the outdoor heat exchanger;

an indoor module including an indoor housing spaced apart from the outdoor housing, and an indoor heat exchanger disposed inside the indoor housing and configured to exchange heat between indoor air and the refrigerant; and

a connection module arranged between the outdoor module and the indoor module and configured to connect the outdoor module to the indoor module in a thickness direction of a window included in the window frame,

wherein the connection module **60** comprises:

a refrigerant pipe configured to provide a path for the refrigerant to move between the outdoor module and the indoor module, and

a total heat exchange module comprising a fan and configured to provide a discharge path for discharging indoor air to outdoors and a suction path for suctioning outdoor air to indoors, and configured to perform indoor ventilation through heat exchange between the indoor air moving along the discharge path and the outdoor air moving along the suction path **2**.

2. The window-type air conditioner of claim **1**, wherein

the total heat exchange module includes,

a total heat exchange element configured to intersect the suction path and the discharge path, and

the total heat exchange element having a first surface through which the indoor air is configured to be introduced, a second surface through which the indoor air is configured to be discharged, a third surface through which the outdoor air is configured to be introduced, and a fourth surface through which the outdoor air is configured to be discharged,

the total heat exchange module includes, in the indoor housing **1**,

an indoor air suction port through which the indoor air is configured to be taken in and an outdoor air discharge port through which the outdoor air is configured to be discharged, and,

in the outdoor housing, an outdoor air suction port through which the outdoor air is configured to be taken in and an indoor air discharge port through which the indoor air is configured to be discharged, and

includes a first duct connecting the first surface to the indoor air suction port, a second duct connecting the second surface to the indoor air discharge port, a third duct connecting the third surface to the outdoor air suction port, and a fourth duct connecting the fourth surface to the outdoor air discharge port.

3. The window-type air conditioner of claim **2**, wherein

the first duct is arranged below the fourth duct, and

the third duct is arranged below the second duct.

4. The window-type air conditioner of claim **2**, wherein,

at least some of the first duct, the second duct, the third duct, and the fourth duct include a length-adjustable structure.

5. The window-type air conditioner of claim **4**, wherein

the length-adjustable structure comprises a bellows including a plurality of pleats.

6. The window-type air conditioner of claim **2**, wherein

the total heat exchange element is arranged to vertically overlap the refrigerant pipe.

7. The window-type air conditioner of claim **2**, wherein

the total heat exchange element is fixed to the outdoor housing and/or the indoor housing.

8. The window-type air conditioner of claim **2**, further comprising

a connection cover accommodating the first duct, the second duct, the third duct, the fourth duct, the refrigerant pipe and the total heat exchange element and configured to connect the outdoor module to the indoor module.

9. The window-type air conditioner of claim **8**, wherein

a width of the connection cover is

less than each of a width of the indoor module and a width of the outdoor module.

10. The window-type air conditioner of claim **2**, wherein

the total heat exchange element is arranged between the indoor housing and the outdoor housing.

11. The window-type air conditioner of claim **2**, wherein

the outdoor air discharge port includes a second blower fan configured to generate an air flow along the suction path, and

the indoor air discharge port **62** includes a first blower fan configured to generate an air flow along the discharge path.

12. The window-type air conditioner of claim **11**, wherein

the indoor air suction port and the outdoor air discharge port comprise a portion of the exterior of the indoor module, and

the outdoor air suction port and the indoor air discharge port comprise a portion of the exterior of the outdoor module **20**.

13. The window-type air conditioner of claim **8**, wherein

a bottom surface of the connection cover is

positioned higher than a bottom surface of the outdoor module and a bottom surface of the indoor module.

14. The window-type air conditioner of claim **2**, wherein,

at least some of the first duct, the second duct, the third duct, and the fourth duct include a backflow prevention damper.

15. The window-type air conditioner of claim **4**, further comprising:

a temporary support portion comprising a support configured to support the indoor module and the outdoor

module and is configured to be removed before the window-type air conditioner is installed in the window frame.

* * * * *