US 20250287610A1

(19) United States
(12) Patent Application Publication
CHUNG et al.
(10) Pub. No.: US 2025/0287610 A1
(43) Pub. Date: Sep. 11, 2025

(54) **INTEGRATED CIRCUIT STRUCTURE AND FABRICATION THEREOF**

(71) Applicants: **TAIWAN SEMICONDUCTOR MANUFACTURING COMPANY, LTD.**, Hsinchu (TW); **NATIONAL TAIWAN UNIVERSITY**, Taipei (TW)

(72) Inventors: **Chia-Che CHUNG**, Hsinchu City (TW); **Chun-Yi CHENG**, Taipei City (TW); **Chee-Wee LIU**, Taipei City (TW)

(73) Assignees: **TAIWAN SEMICONDUCTOR MANUFACTURING COMPANY, LTD.**, Hsinchu (TW); **NATIONAL TAIWAN UNIVERSITY**, Taipei (TW)

(21) Appl. No.: **19/216,905**

(22) Filed: **May 23, 2025**

Related U.S. Application Data

(62) Division of application No. 17/689,784, filed on Mar. 8, 2022, now Pat. No. 12,336,190.

(60) Provisional application No. 63/224,361, filed on Jul. 21, 2021.

Publication Classification

(51) **Int. Cl.**
H10B 61/00 (2023.01)
H10N 50/01 (2023.01)

(52) **U.S. Cl.**
CPC ***H10B 61/22*** (2023.02); ***H10N 50/01*** (2023.02)

(57) **ABSTRACT**

An IC structure comprises an MTJ cell, a transistor, a first word line, and a second word line. The transistor is electrically coupled to the MTJ cell. The transistor comprises a first gate terminal and a second gate terminal independent of the first gate terminal. The first word line is electrically coupled to the first gate terminal of the transistor. The second word line is electrically coupled to the second gate terminal of the transistor. A resistance state of the MTJ cell is dependent on a first word line voltage applied to the first word line and a second word line voltage applied to the second word line, and the resistance state of the MTJ cell follows an AND gate logic or an OR gate logic.

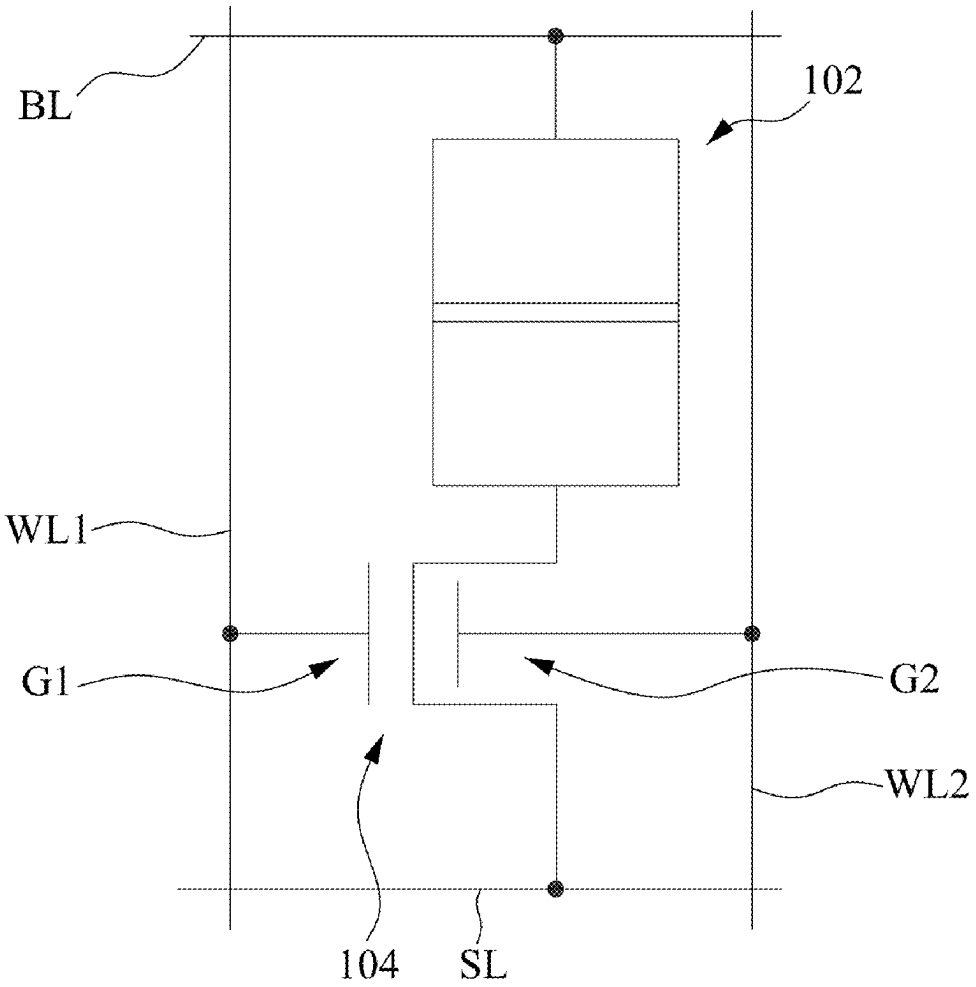

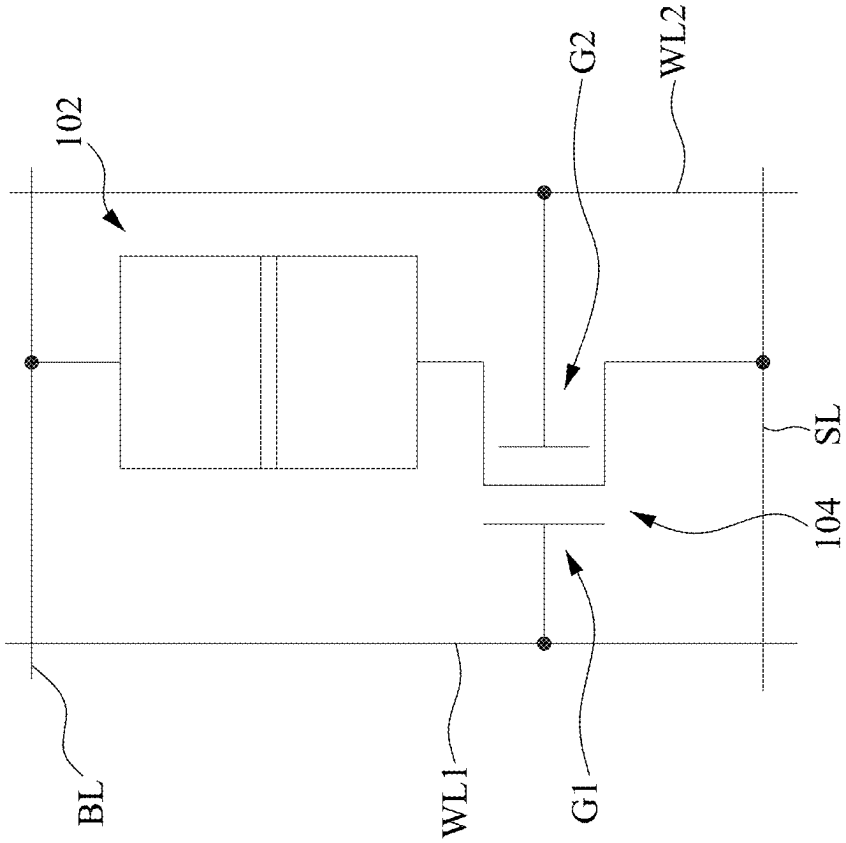

Fig. 1

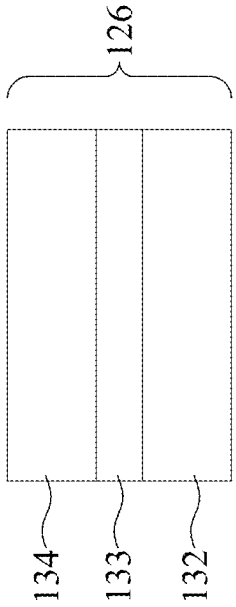

Fig. 2B

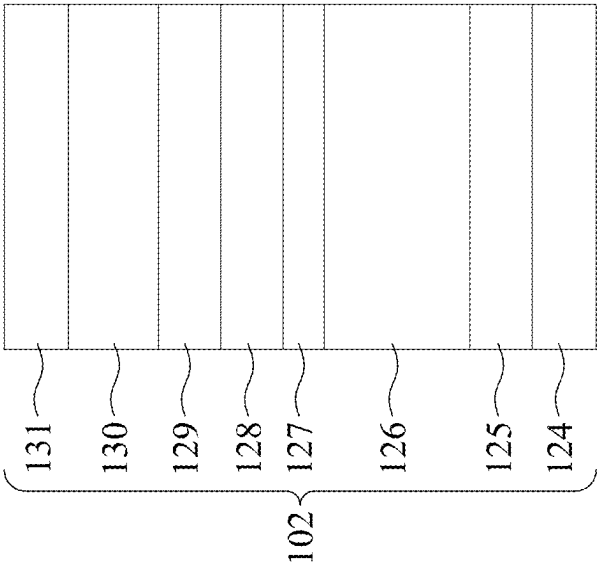

Fig. 2A

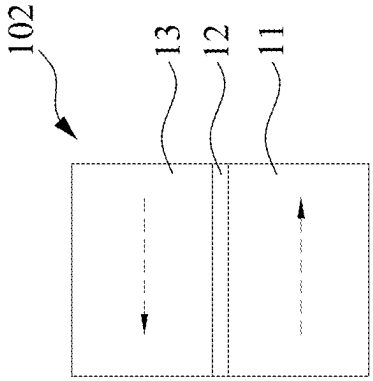

Fig. 3B

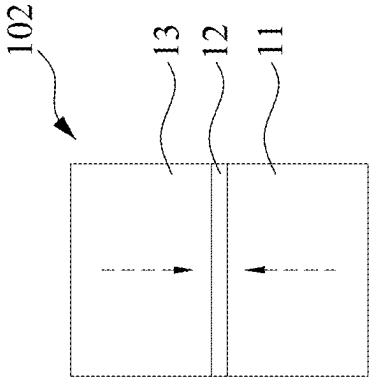

Fig. 3D

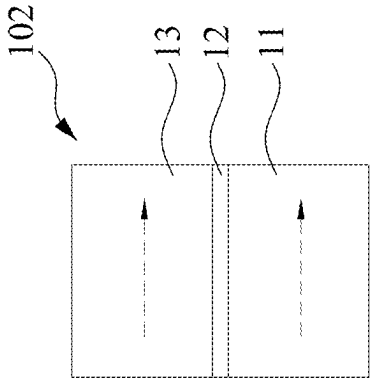

Fig. 3A

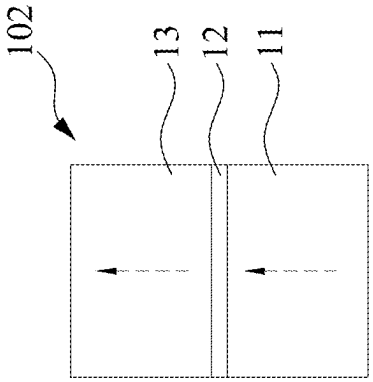

Fig. 3C

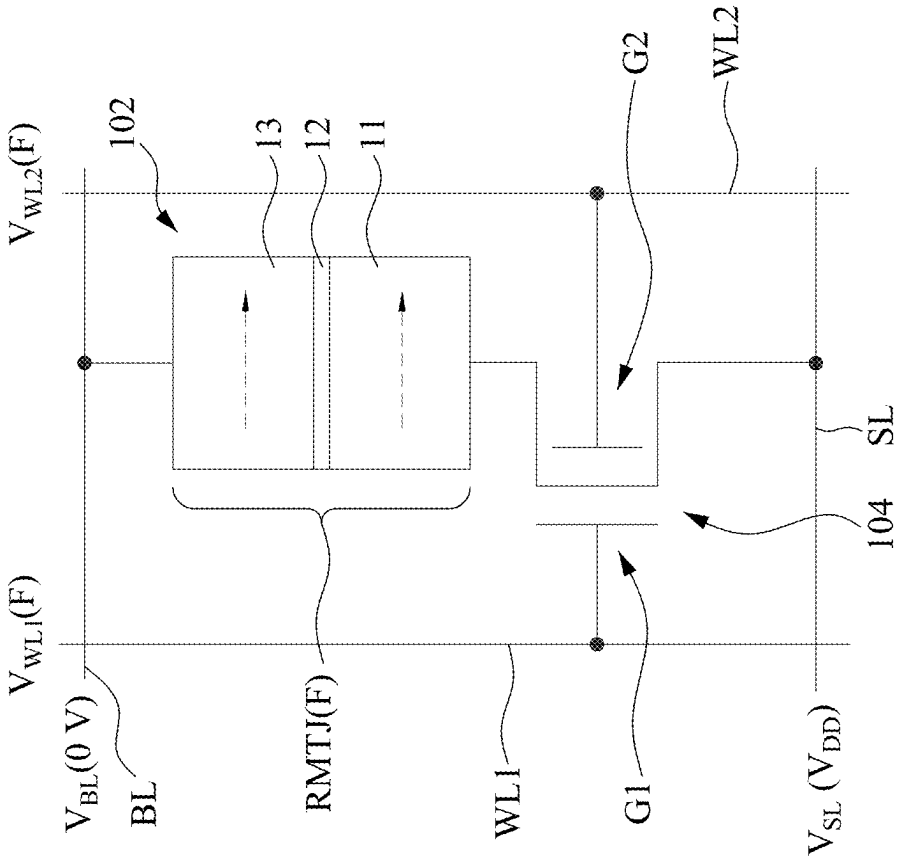
$V_{WL2}(F)$
102
13
12
11
G2
WL2
$V_{WL1}(F)$
$V_{BL}(0\ V)$
BL
RMTJ(F)
WL1
G1
$V_{SL}\ (V_{DD})$
104
SL

Fig. 4A

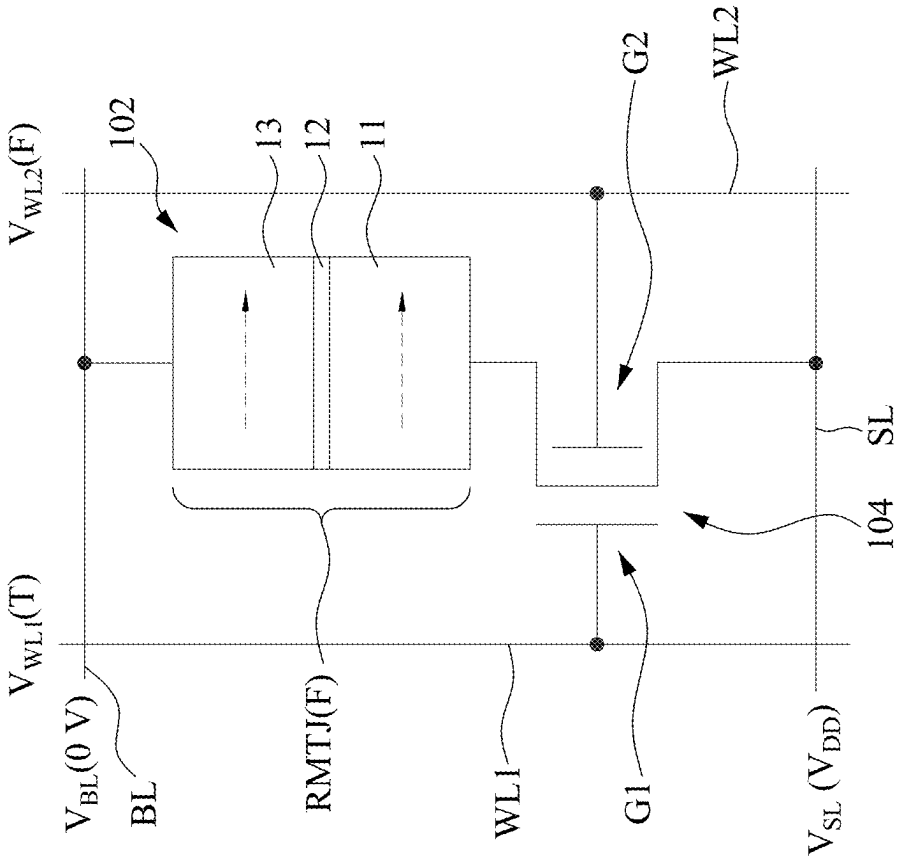
V_{WL2}(F)
102
13
12
11
G2
WL2
V_{WL1}(T)
V_{BL}(0 V)
BL
RMTJ(F)
WL1
G1
V_{SL} (V_{DD})
104
SL

Fig. 4B

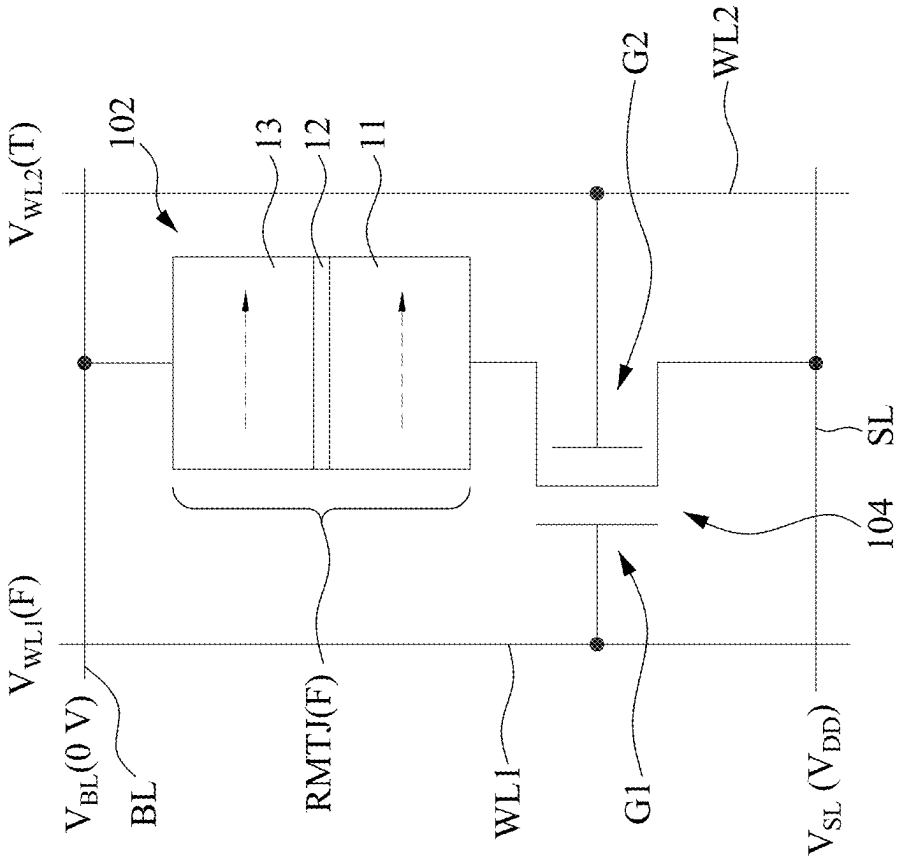
V_{WL2}(T)
102
13
12
11
G2
WL2
V_{WL1}(F)
V_{BL}(0 V)
BL
RMTJ(F)
WL1
G1
V_{SL} (V_{DD})
104
SL

Fig. 4C

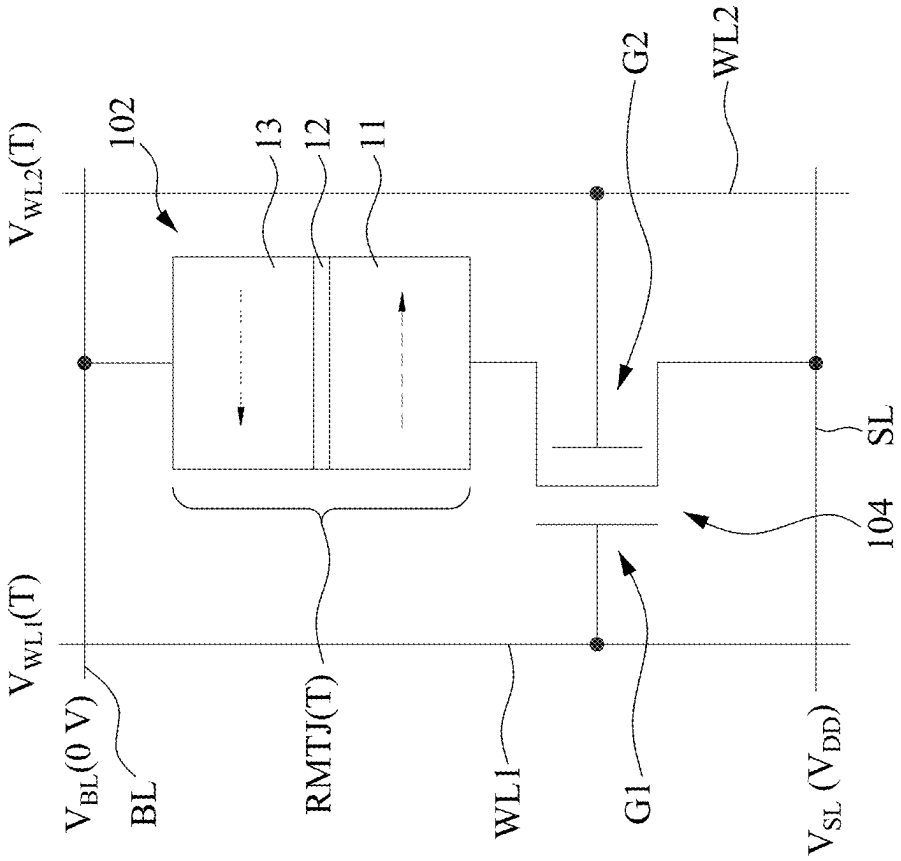
$V_{WL2}(T)$
102
13
12
11
G2
WL2
$V_{WL1}(T)$
$V_{BL}(0\ V)$
BL
RMTJ(T)
WL1
G1
$V_{SL}\ (V_{DD})$
104
SL

Fig. 4D

1T-1MTJ with AND2 logic function

Inputs		Output
V_{WL1}	V_{WL2}	R_{MTJ}
0 or False	0 or False	0 or False (R_P)
1 or True (V_{DD})	0 or False	0 or False (R_P)
0 or False	1 or True (V_{DD})	0 or False (R_P)
1 or True (V_{DD})	1 or True (V_{DD})	1 or True (R_P)

Fig. 5

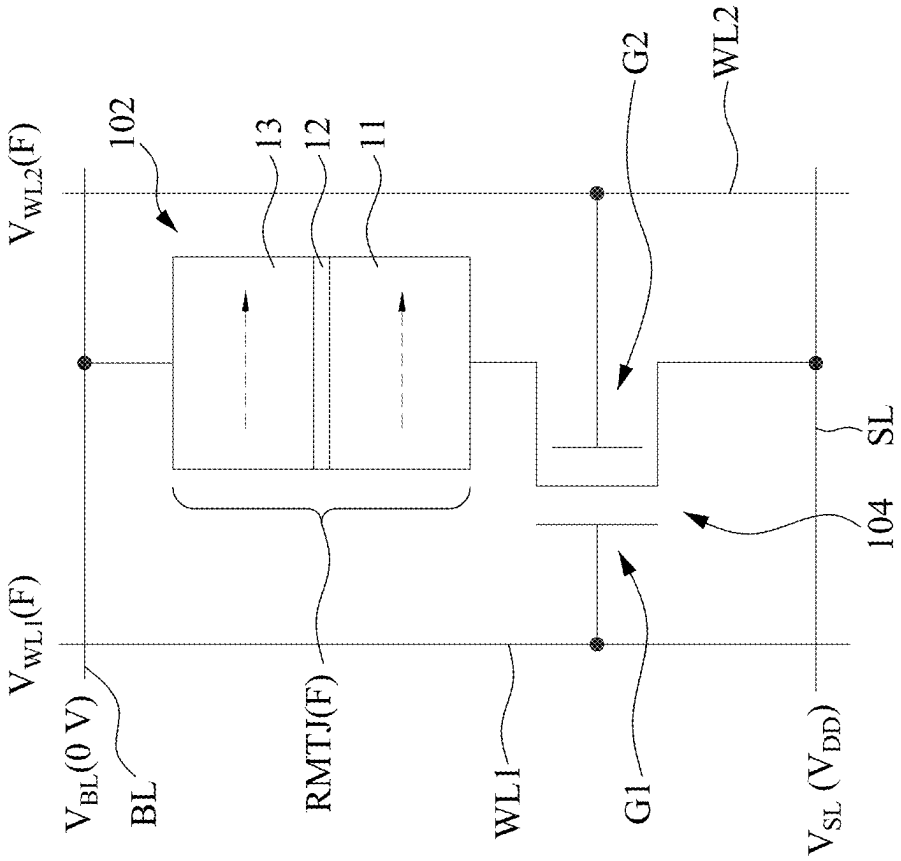
$V_{WL2}(F)$
102
13
12
11
G2
WL2
$V_{WL1}(F)$
$V_{BL}(0\ V)$
BL
RMTJ(F)
WL1
G1
$V_{SL}\ (V_{DD})$
104
SL

Fig. 6A

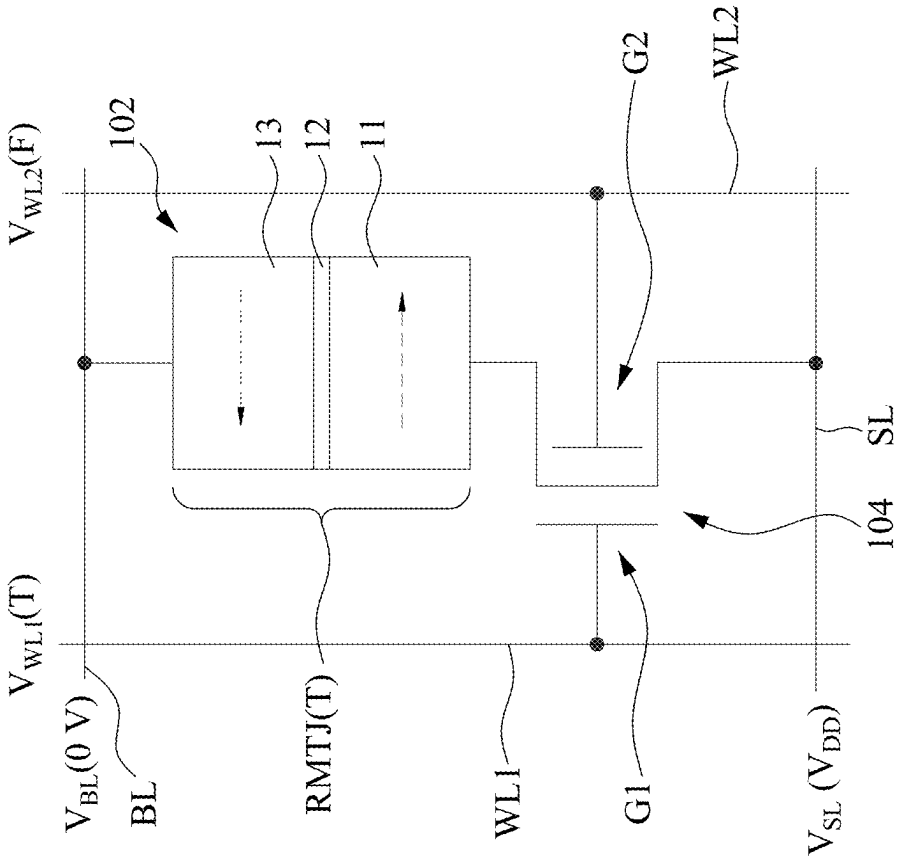
V_{WL2}(F)
102
13
12
11
G2
WL2
V_{WL1}(T)
V_{BL}(0 V)
BL
RMTJ(T)
WL1
G1
V_{SL} (V_{DD})
104
SL

Fig. 6B

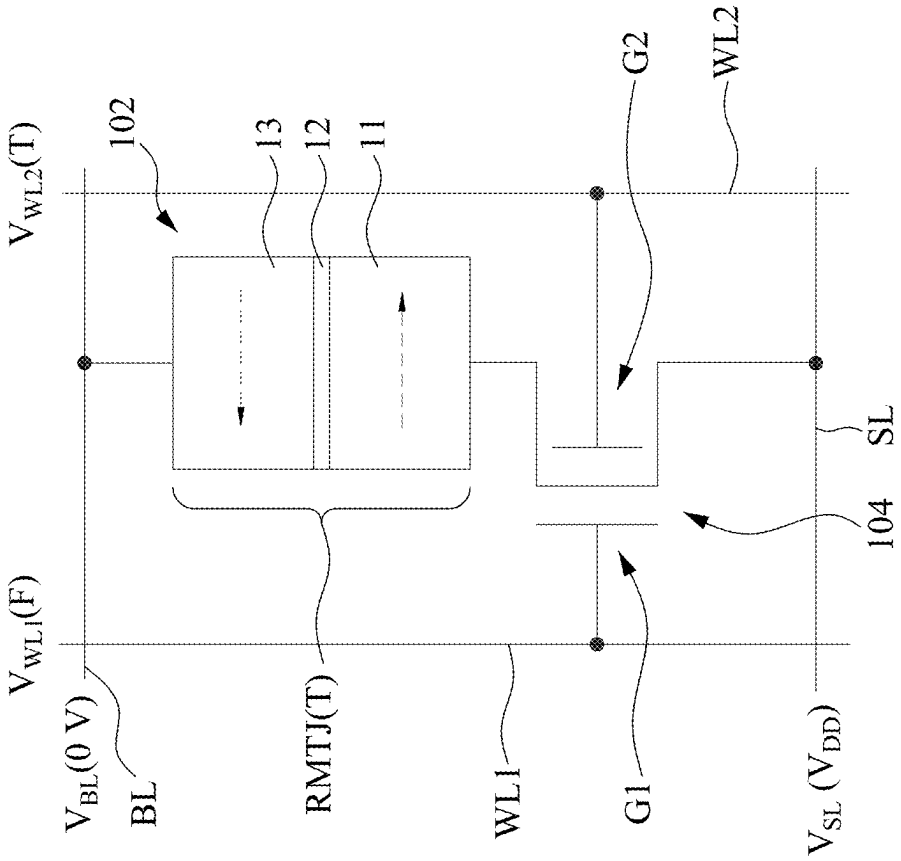
V_{WL2}(T)
102
13
12
11
G2
WL2
V_{WL1}(F)
V_{BL}(0 V)
BL
RMTJ(T)
WL1
G1
V_{SL} (V_{DD})
104
SL

Fig. 6C

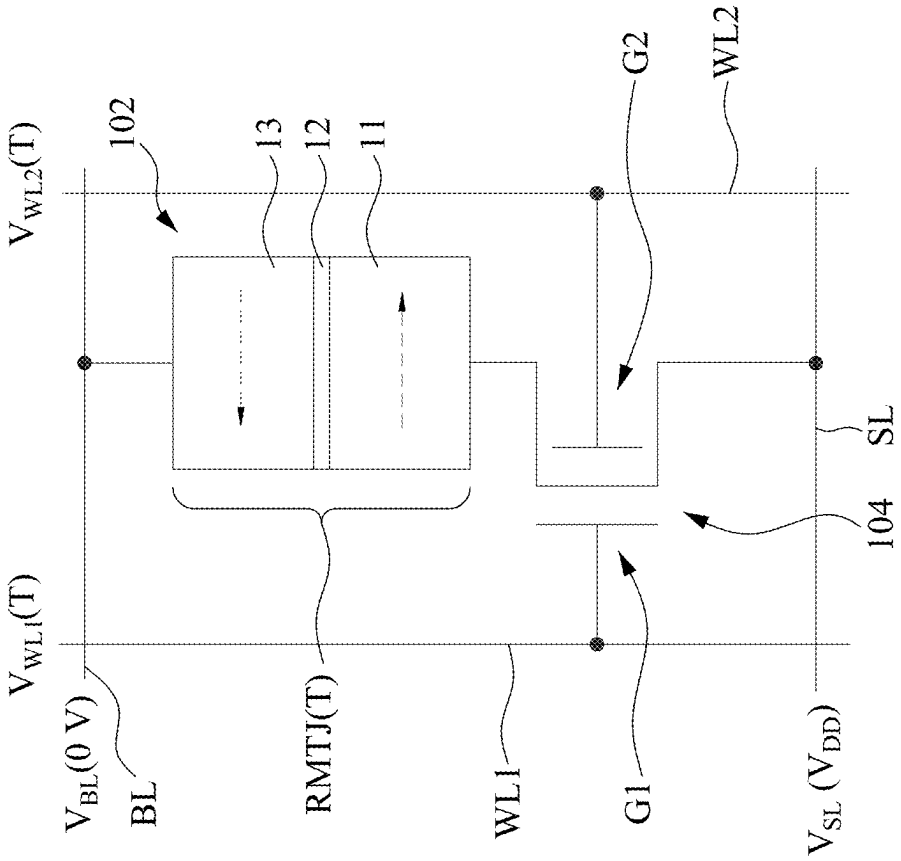
$V_{WL2}(T)$
102
13
12
11
G2
WL2
$V_{WL1}(T)$
$V_{BL}(0\ V)$
BL
RMTJ(T)
WL1
G1
$V_{SL}\ (V_{DD})$
104
SL

Fig. 6D

1T-1MTJ with OR2 logic function

Inputs		Output
V_{WL1}	V_{WL2}	R_{MTJ}
0 or False	0 or False	0 or False (R_P)
1 or True (V_{DD})	0 or False	1 or True (R_{AP})
0 or False	1 or True (V_{DD})	1 or True (R_{AP})
1 or True (V_{DD})	1 or True (V_{DD})	1 or True (R_{AP})

Fig. 7

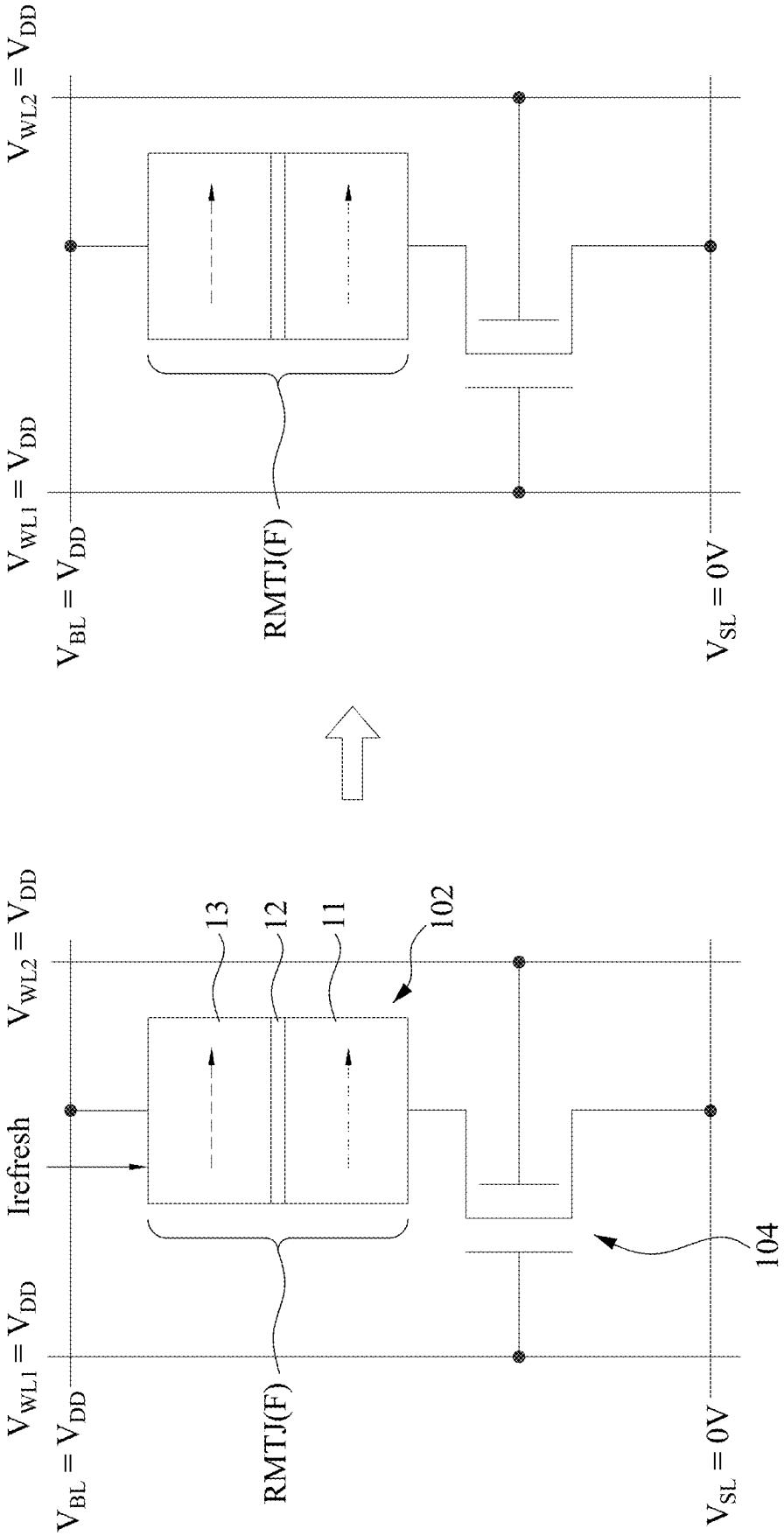
$V_{WL2} = V_{DD}$
$V_{WL1} = V_{DD}$
$V_{BL} = V_{DD}$
RMTJ(F)
$V_{SL} = 0V$
Irefresh
13
12
11
102
104

Fig. 8A

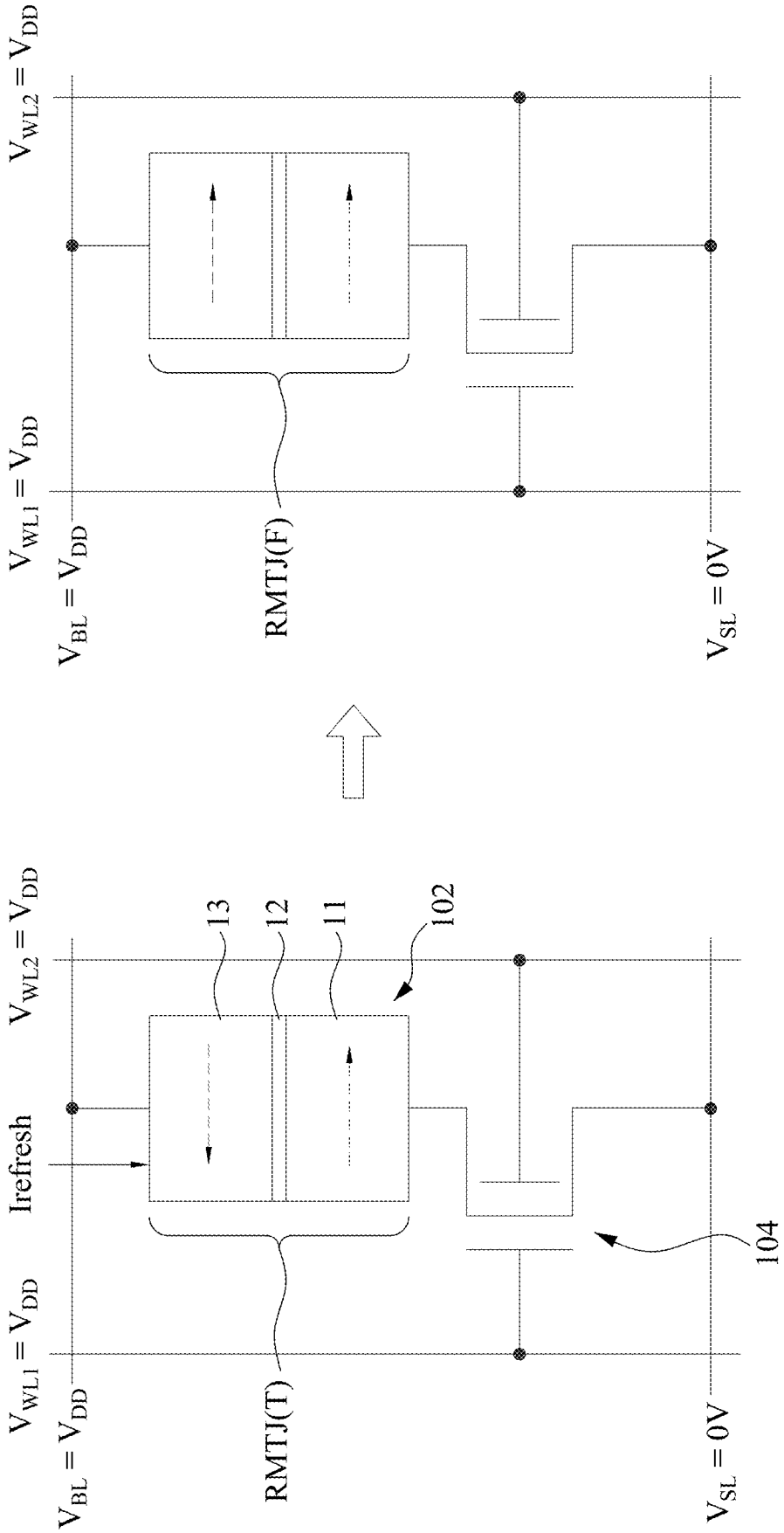
$V_{WL2} = V_{DD}$
$V_{WL1} = V_{DD}$
$V_{BL} = V_{DD}$
RMTJ(F)
$V_{SL} = 0V$
$V_{WL2} = V_{DD}$
13
12
11
102
Irefresh
$V_{WL1} = V_{DD}$
$V_{BL} = V_{DD}$
RMTJ(T)
104
$V_{SL} = 0V$

Fig. 8B

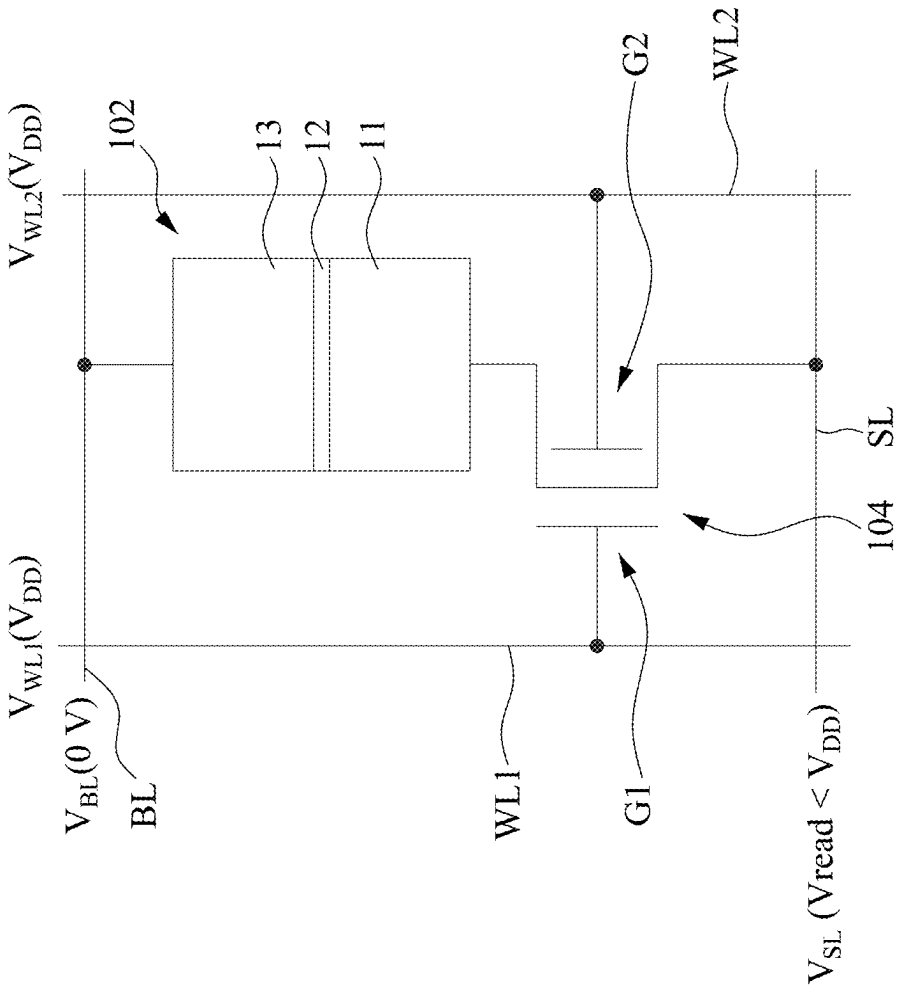
$V_{WL2}(V_{DD})$
102
13
12
11
G2
WL2
$V_{WL1}(V_{DD})$
$V_{BL}(0\ V)$
BL
WL1
G1
V_{SL} (Vread < V_{DD})
104
SL

Fig. 9

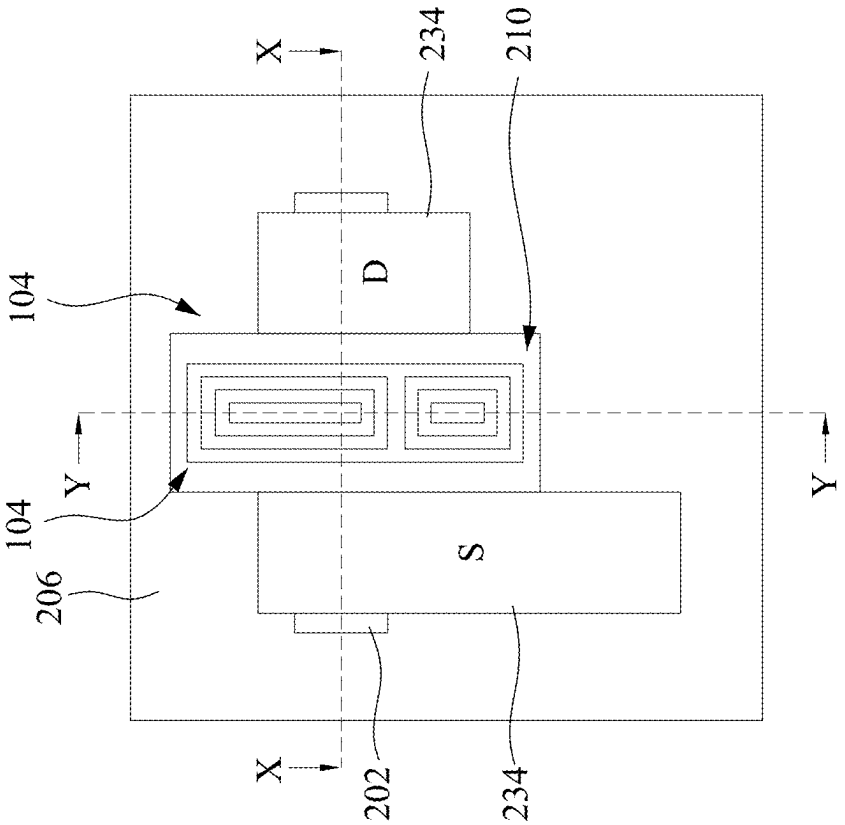

Fig. 10A

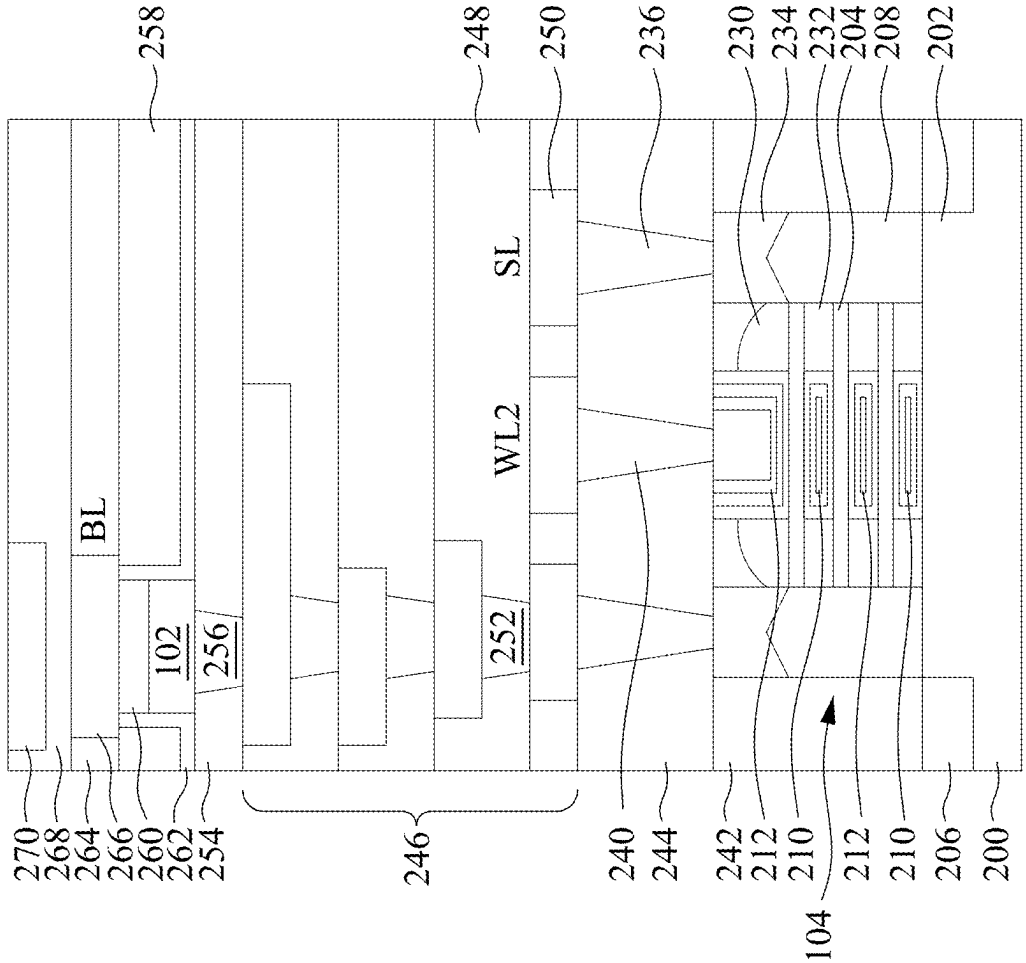
258
248
250
236
230
234
232
204
208
202
SL
WL2
BL
102
256
252
270
268
264
266
260
262
254
246
240
244
242
212
210
104
212
210
206
200

Fig. 10B

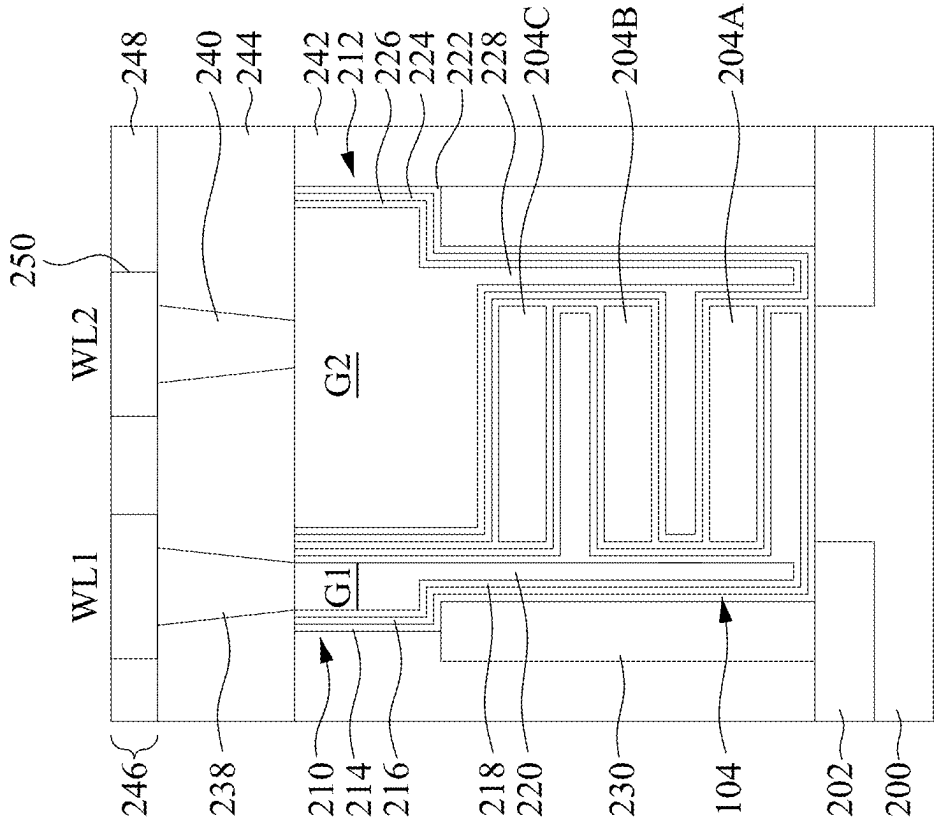
248
240
244
242
212
226
224
222
228
204C
204B
204A
250
WL2
G2
WL1
G1
246
238
210
214
216
218
220
230
104
202
200

Fig. 10C

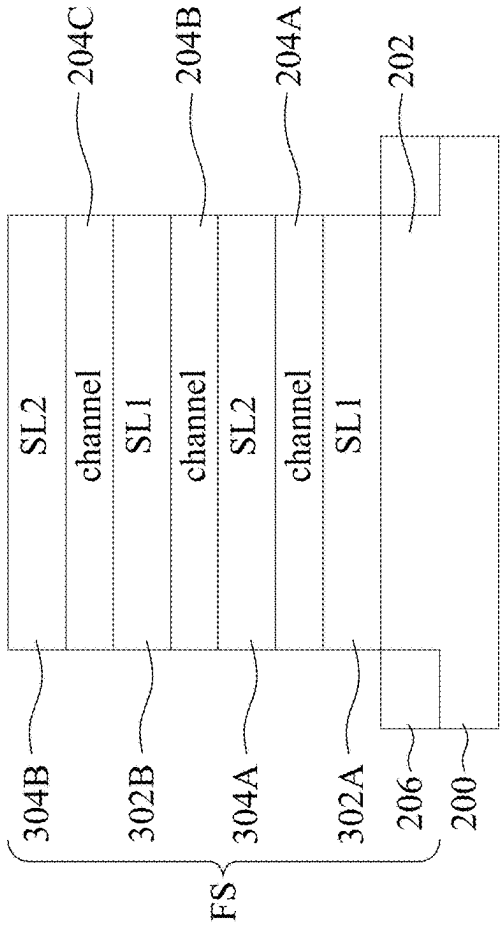

Fig. 11B

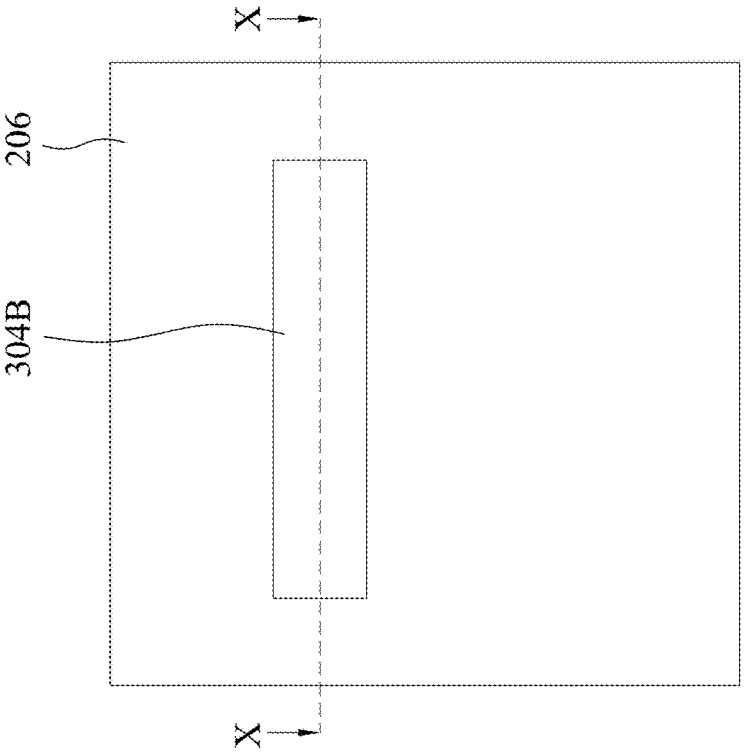

Fig. 11A

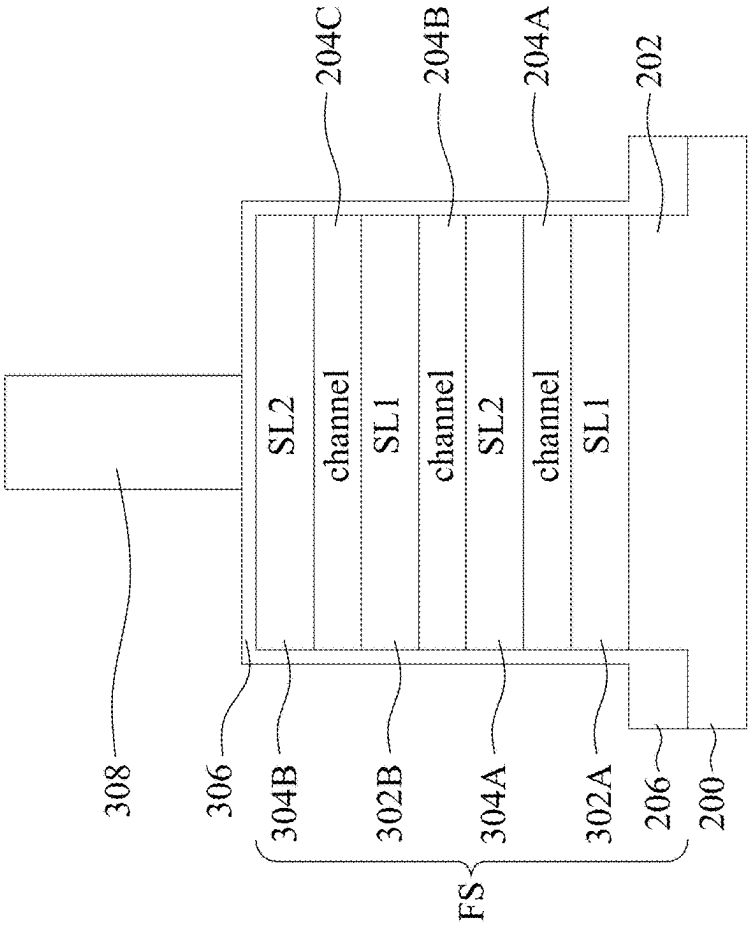

Fig. 12B

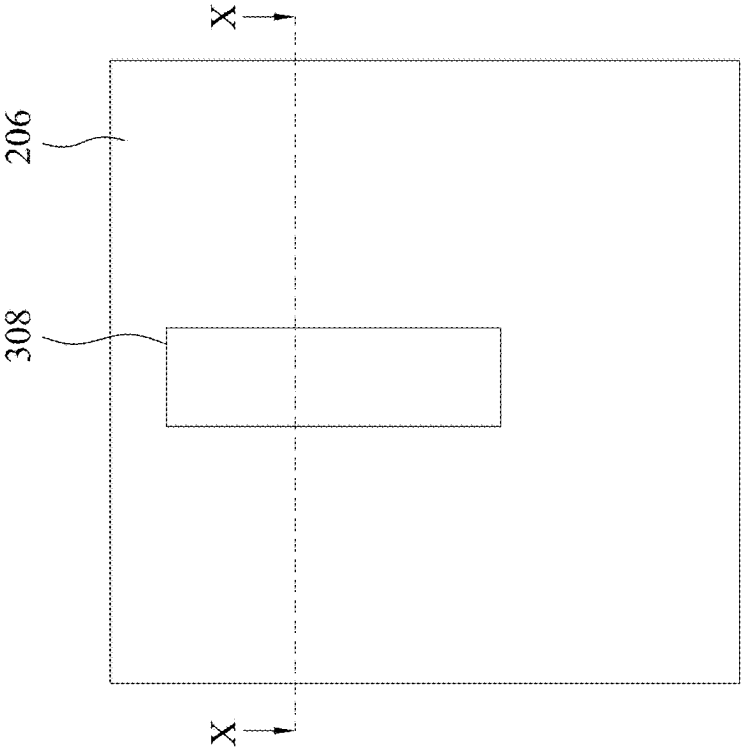

Fig. 12A

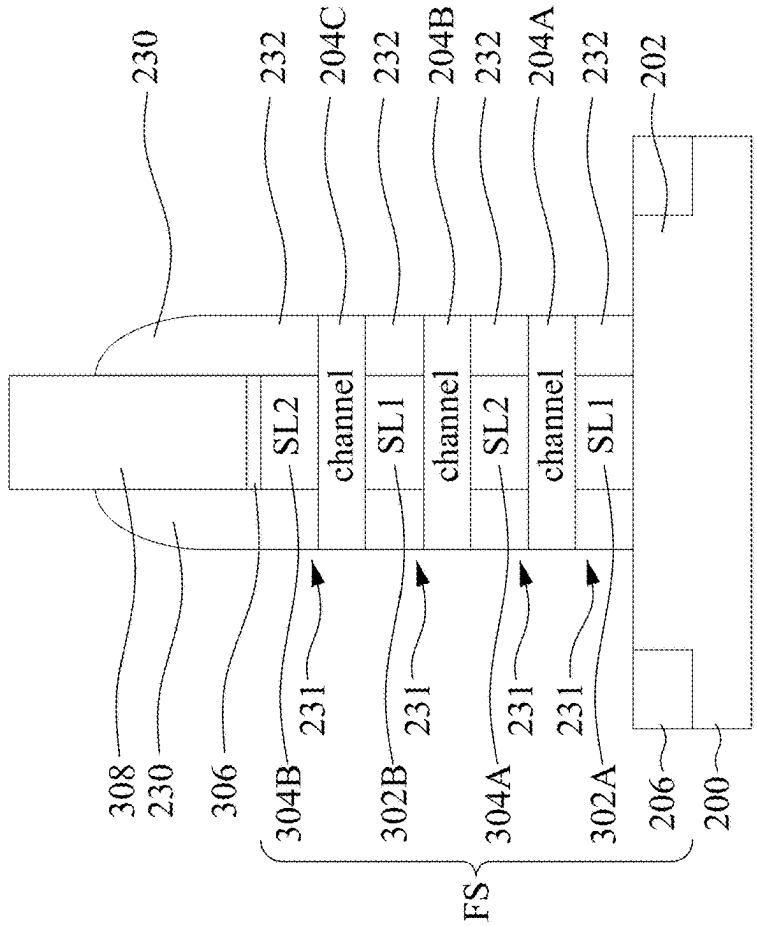

Fig. 13B

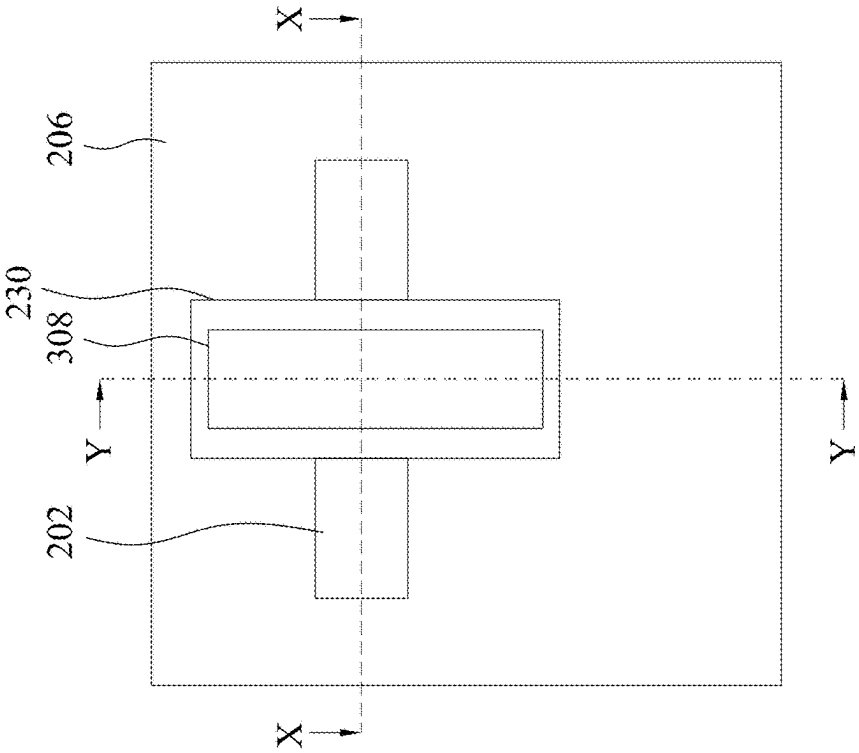

Fig. 13A

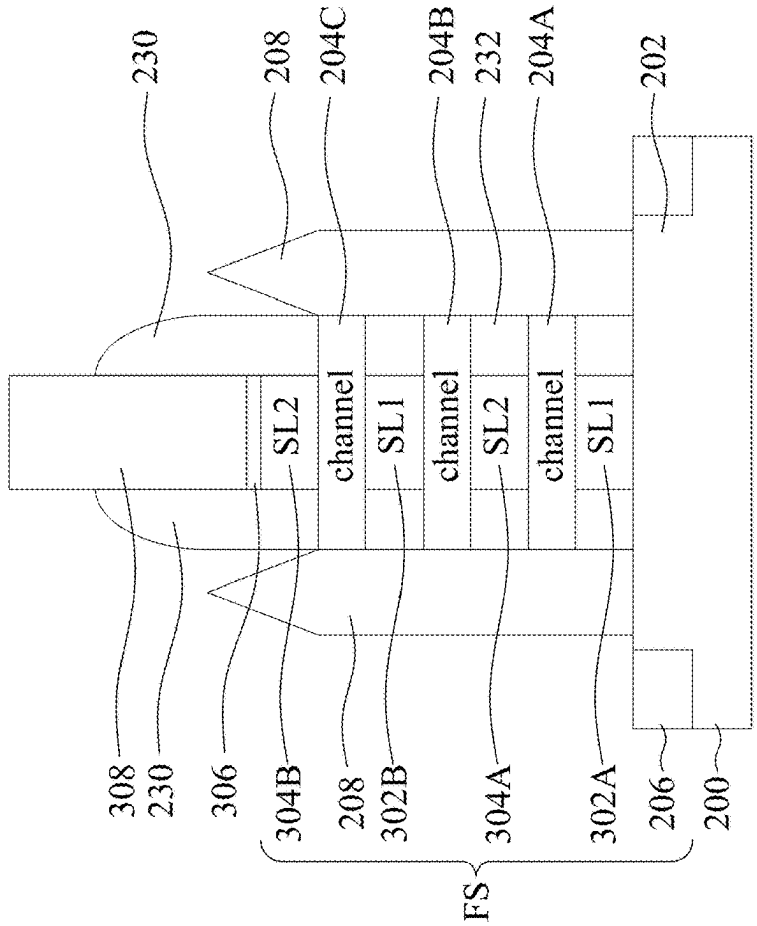

Fig. 14B

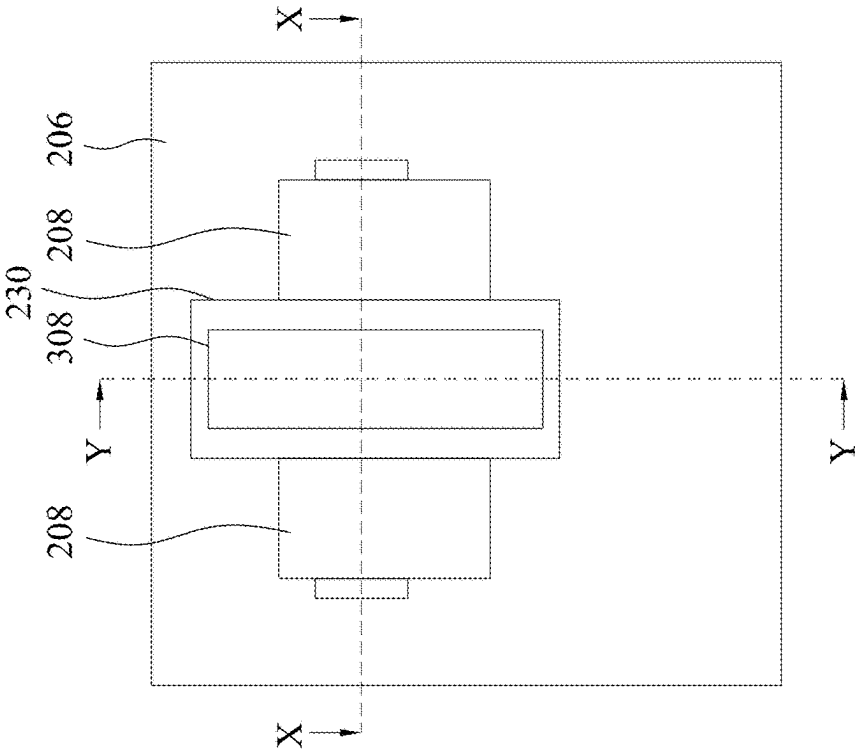

Fig. 14A

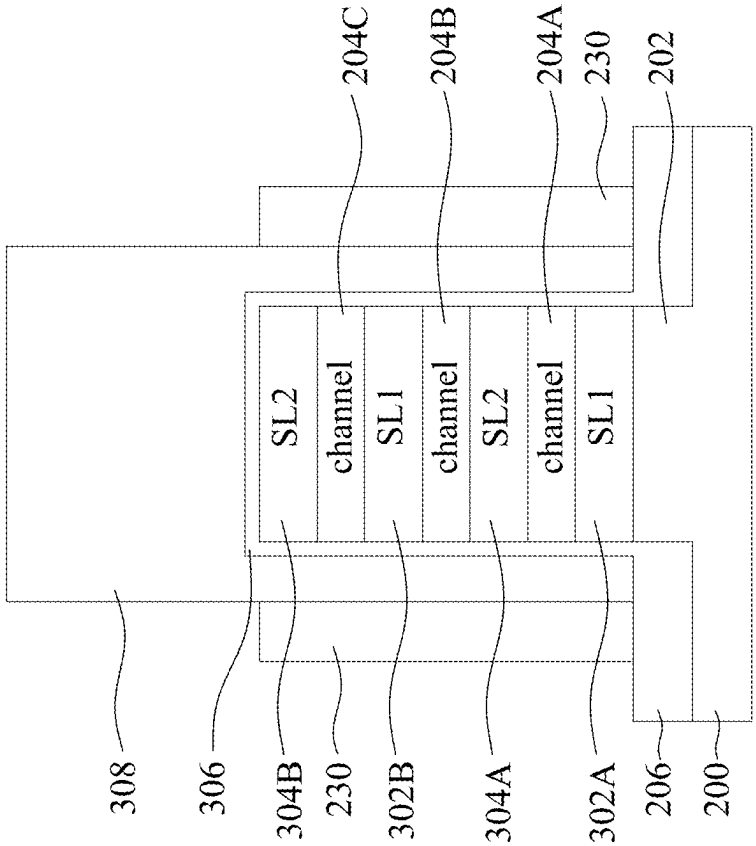
308
306
304B
230
302B
304A
302A
206
200
SL2
channel
SL1
channel
SL2
channel
SL1
204C
204B
204A
230
202

Fig. 14C

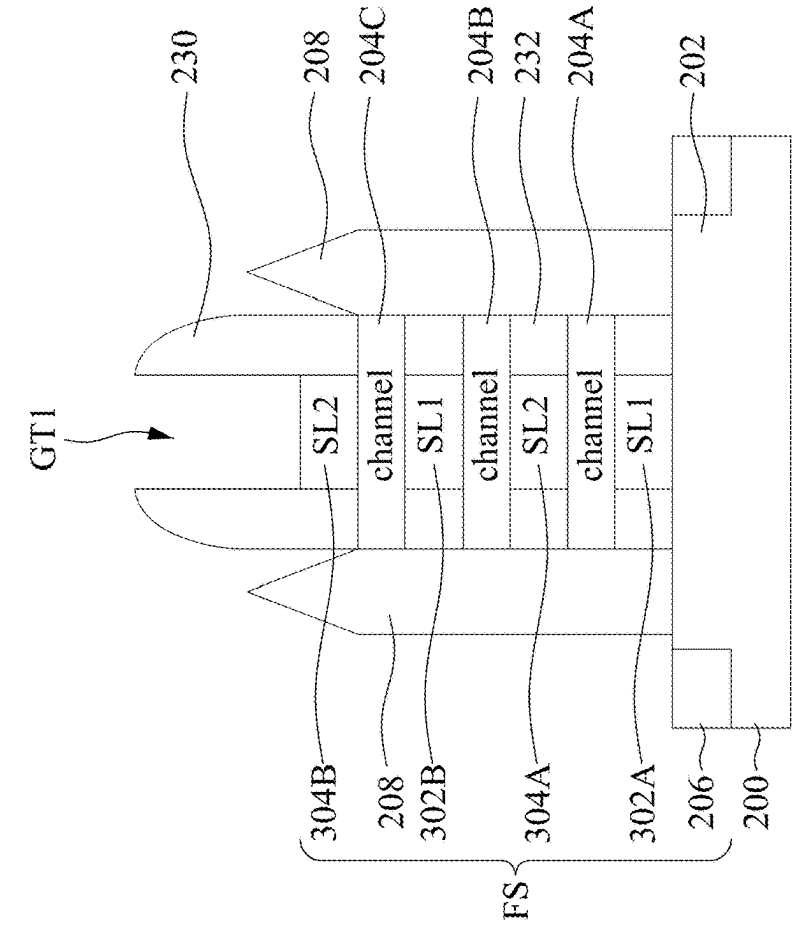

Fig. 15B

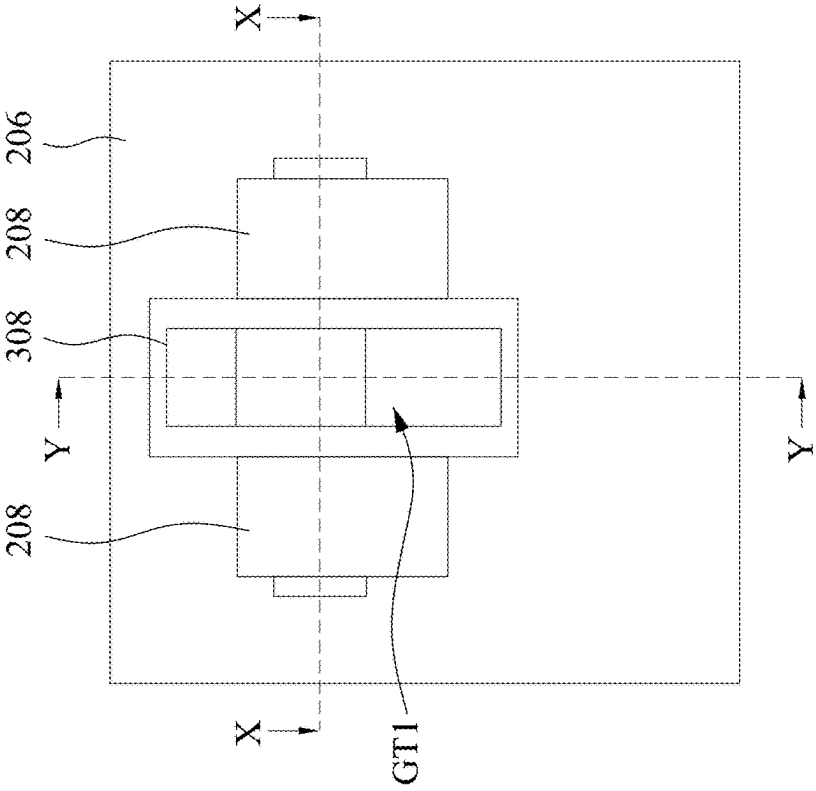

Fig. 15A

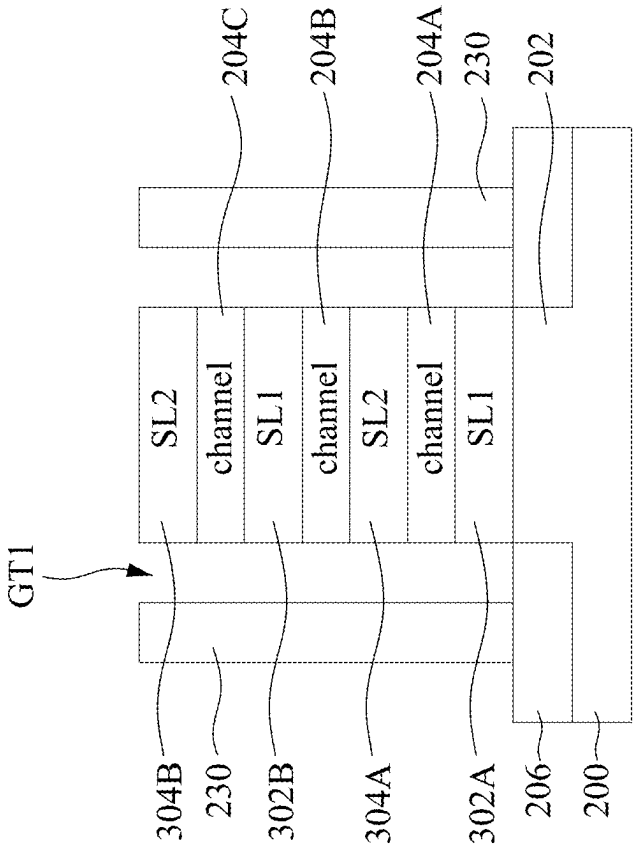
GT1
304B
230
302B
304A
302A
206
200
SL2
channel
SL1
channel
SL2
channel
SL1
204C
204B
204A
230
202

Fig. 15C

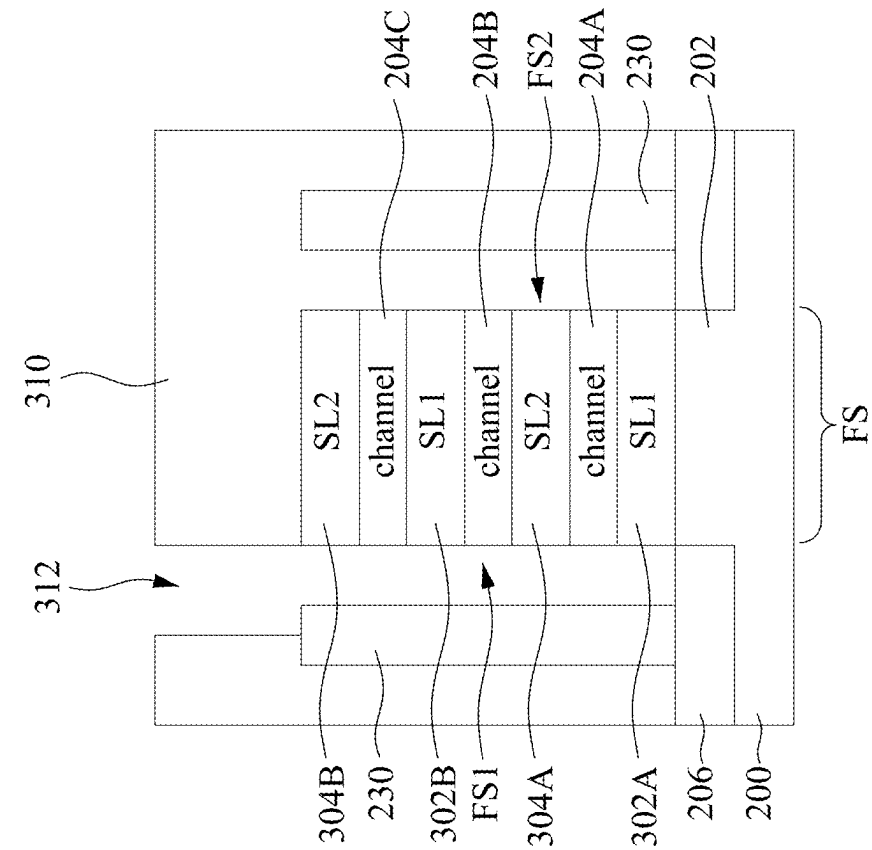

Fig. 16B

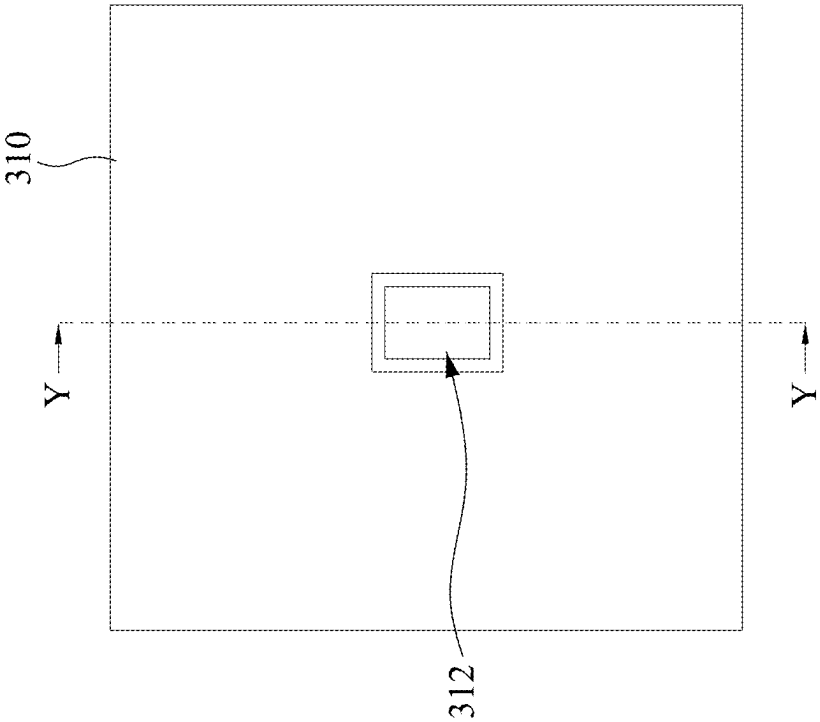

Fig. 16A

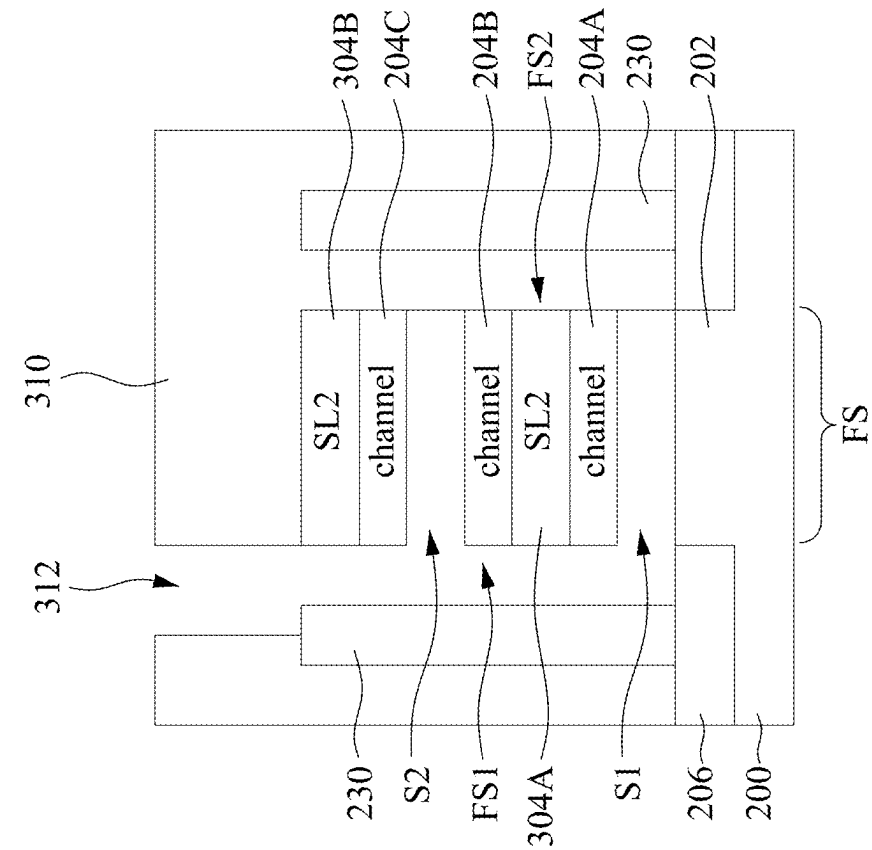

Fig. 17B

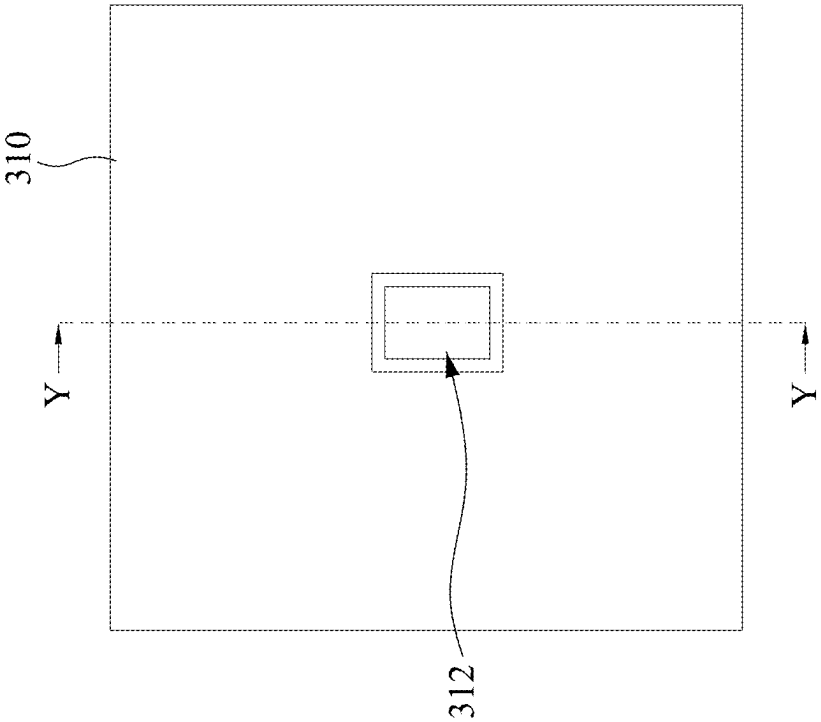

Fig. 17A

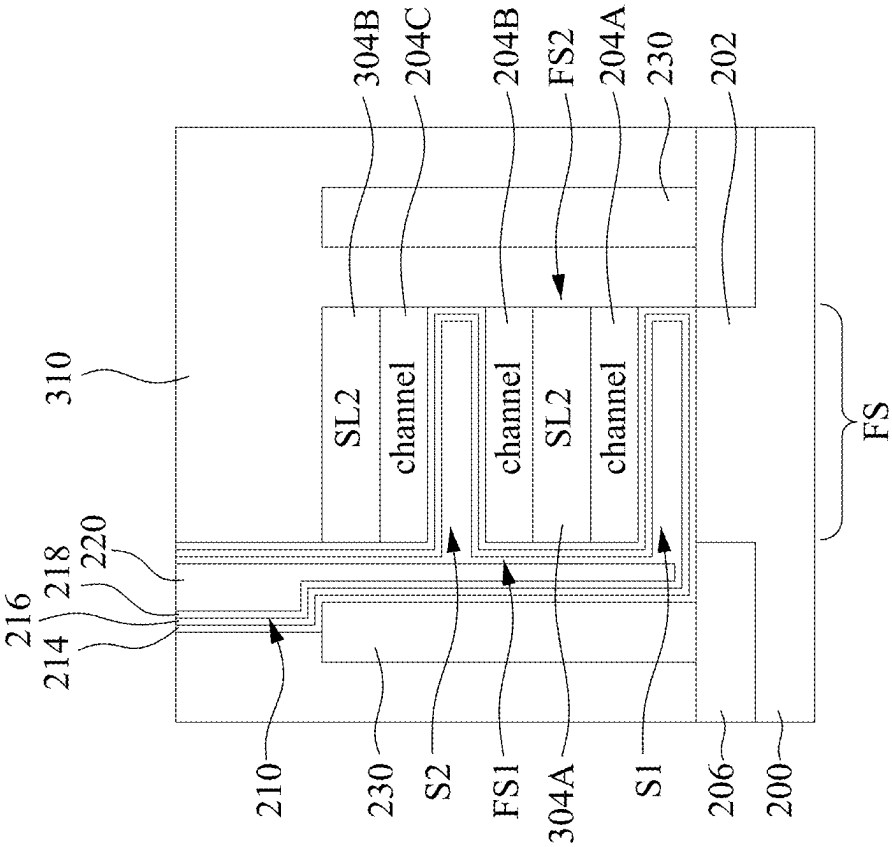

Fig. 18B

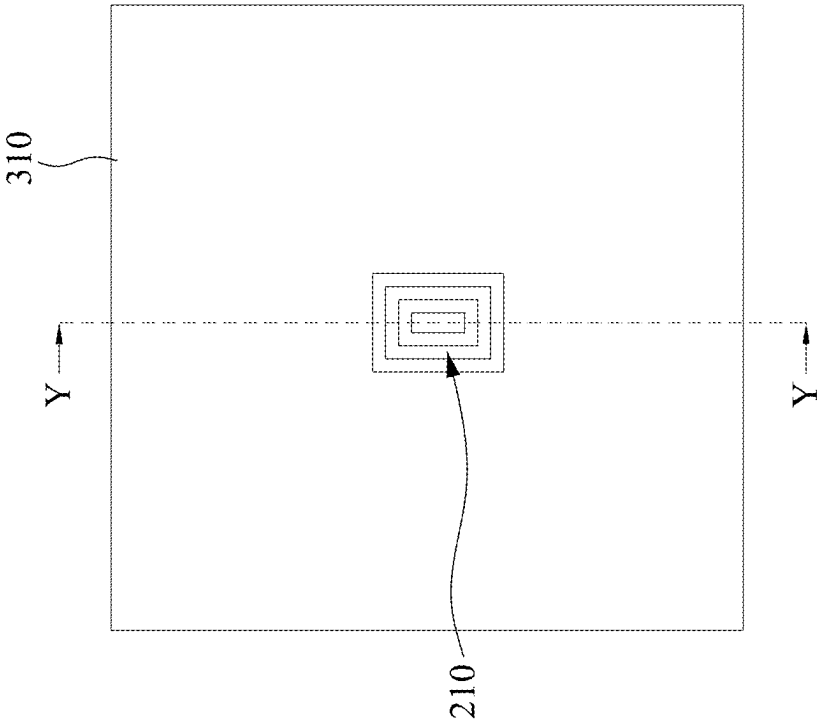

Fig. 18A

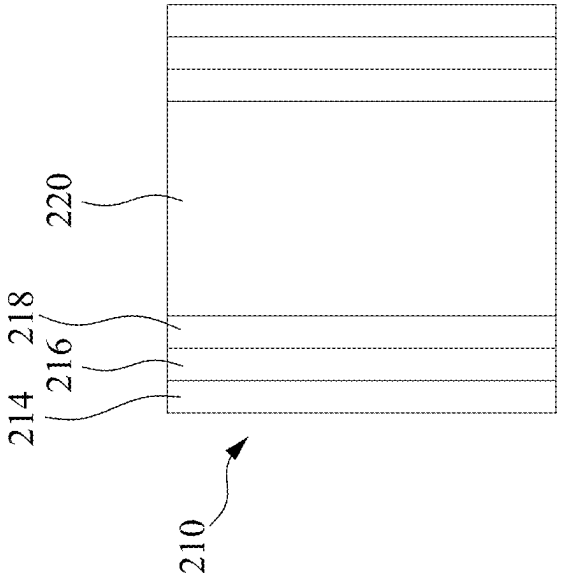

Fig. 18C

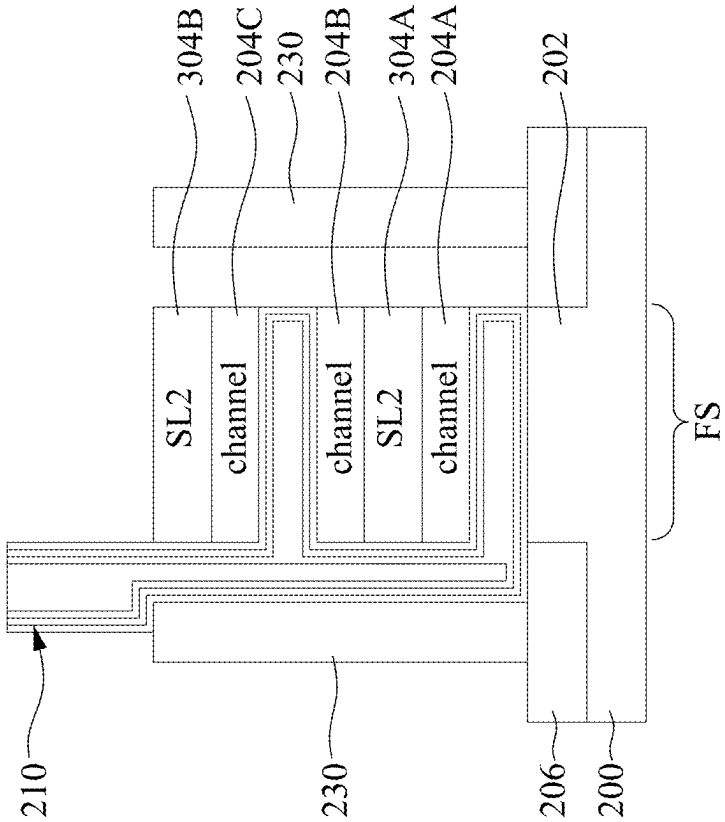

Fig. 19B

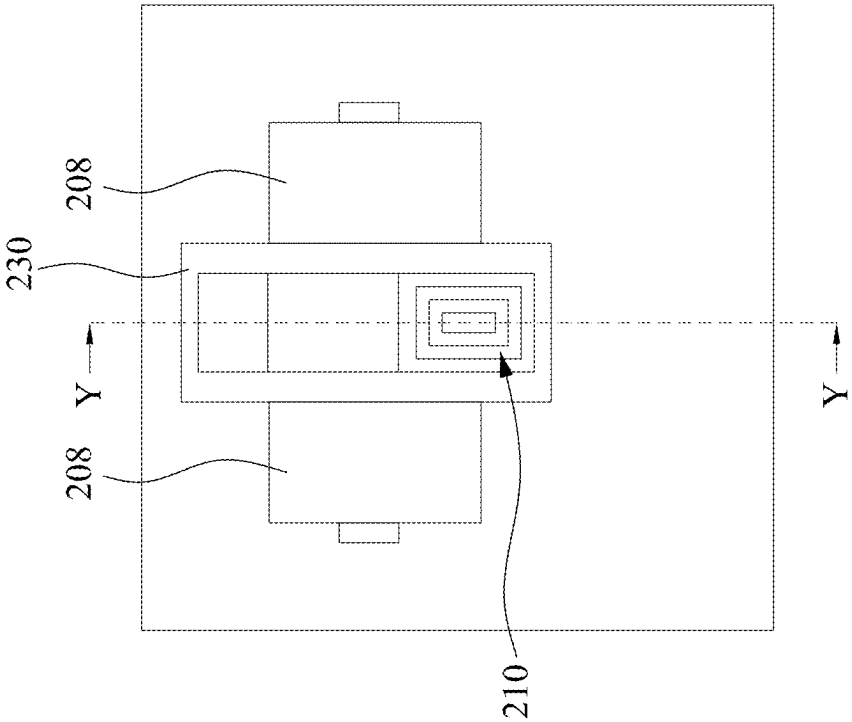

Fig. 19A

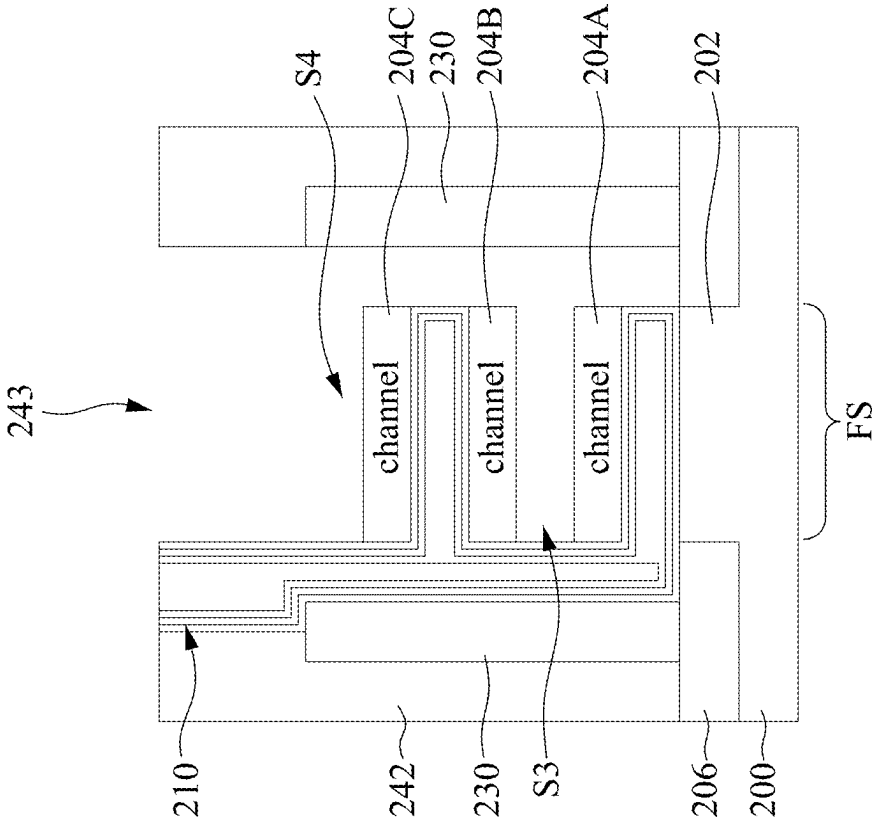

Fig. 20B

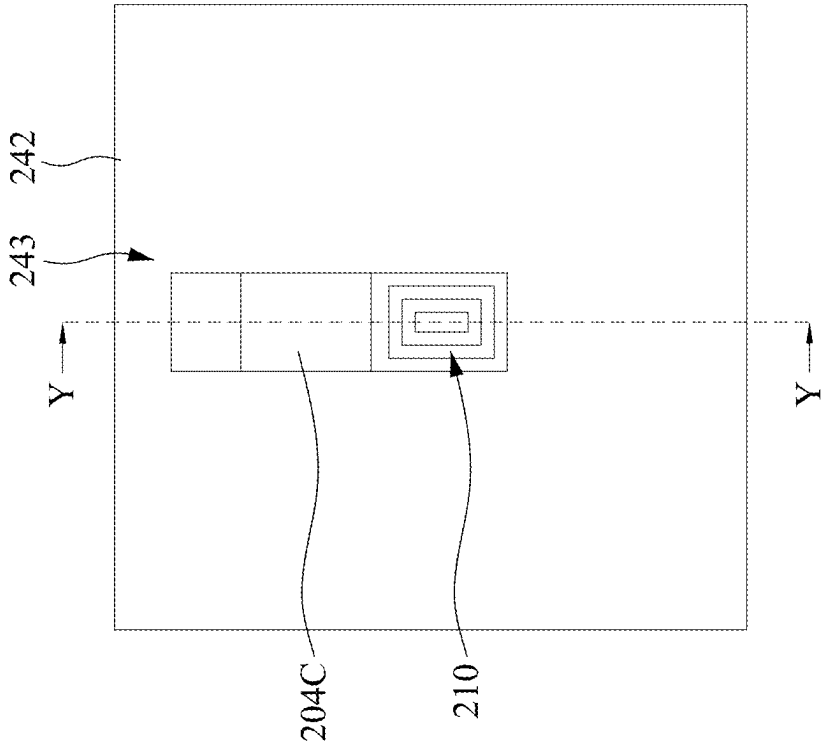

Fig. 20A

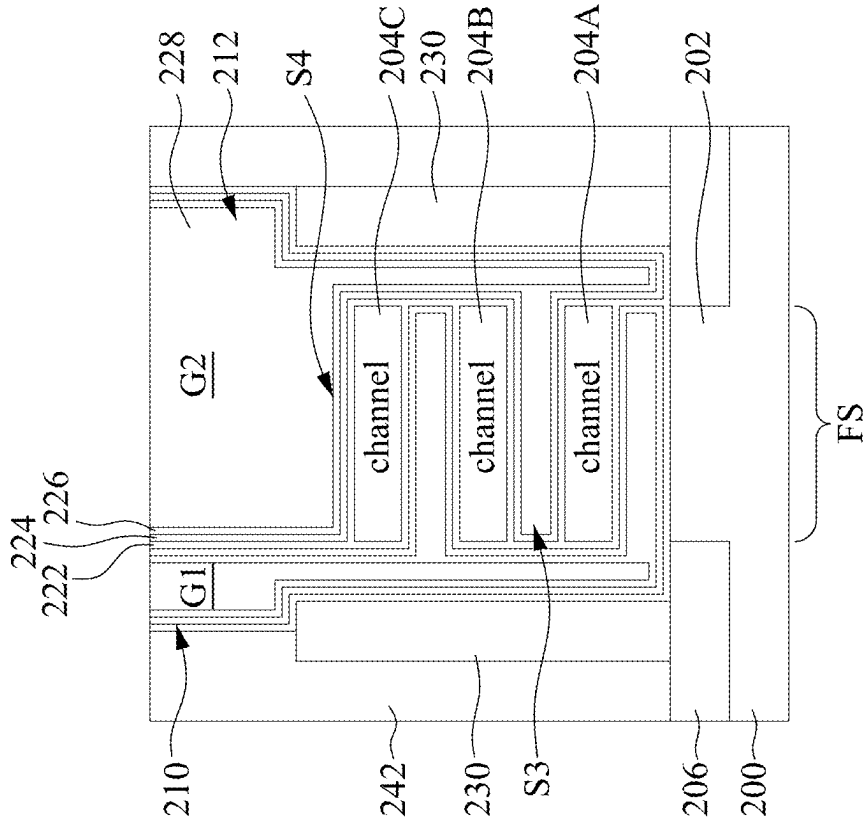

Fig. 21B

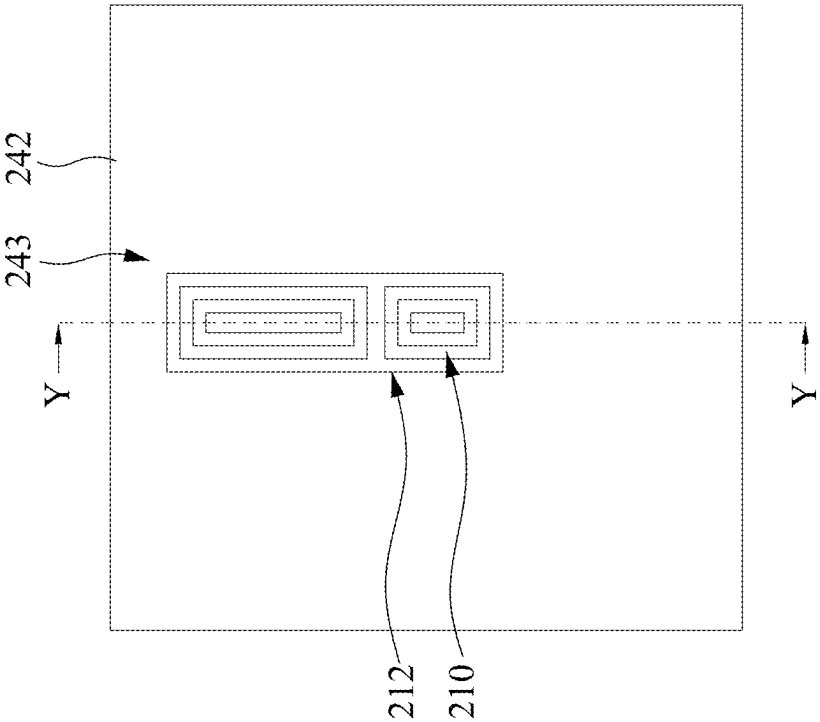

Fig. 21A

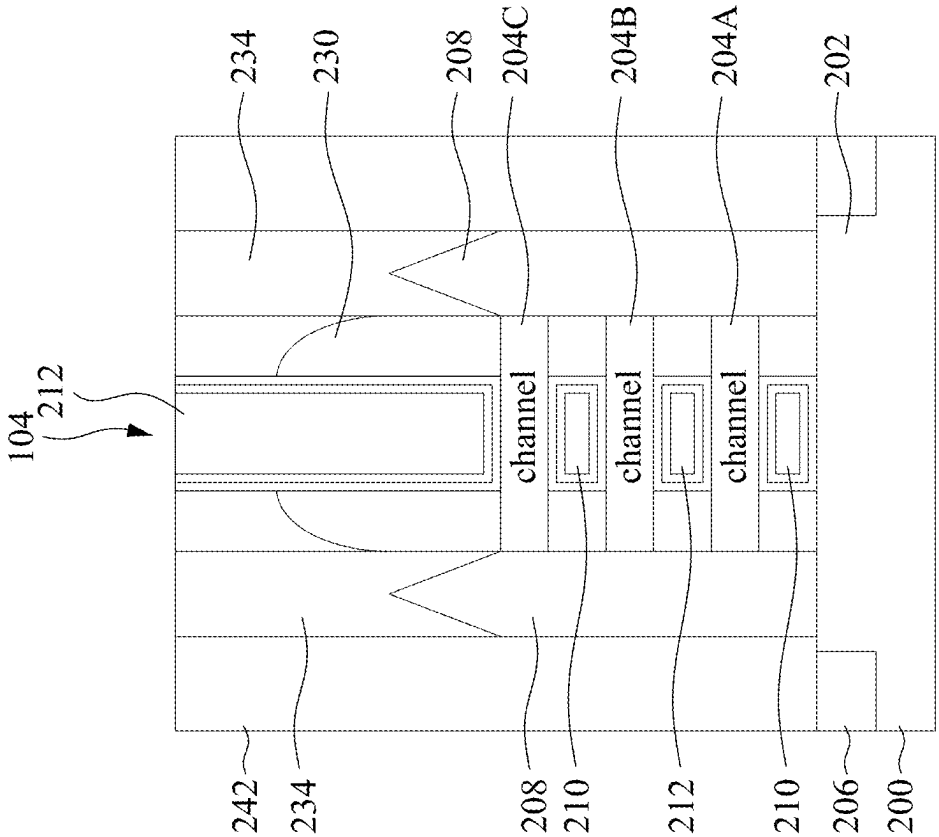

Fig. 22B

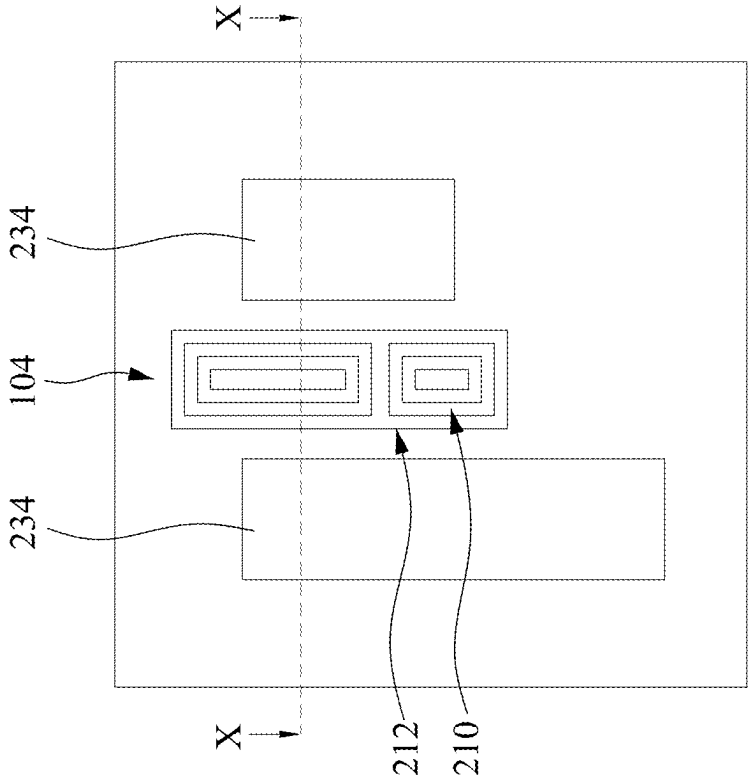

Fig. 22A

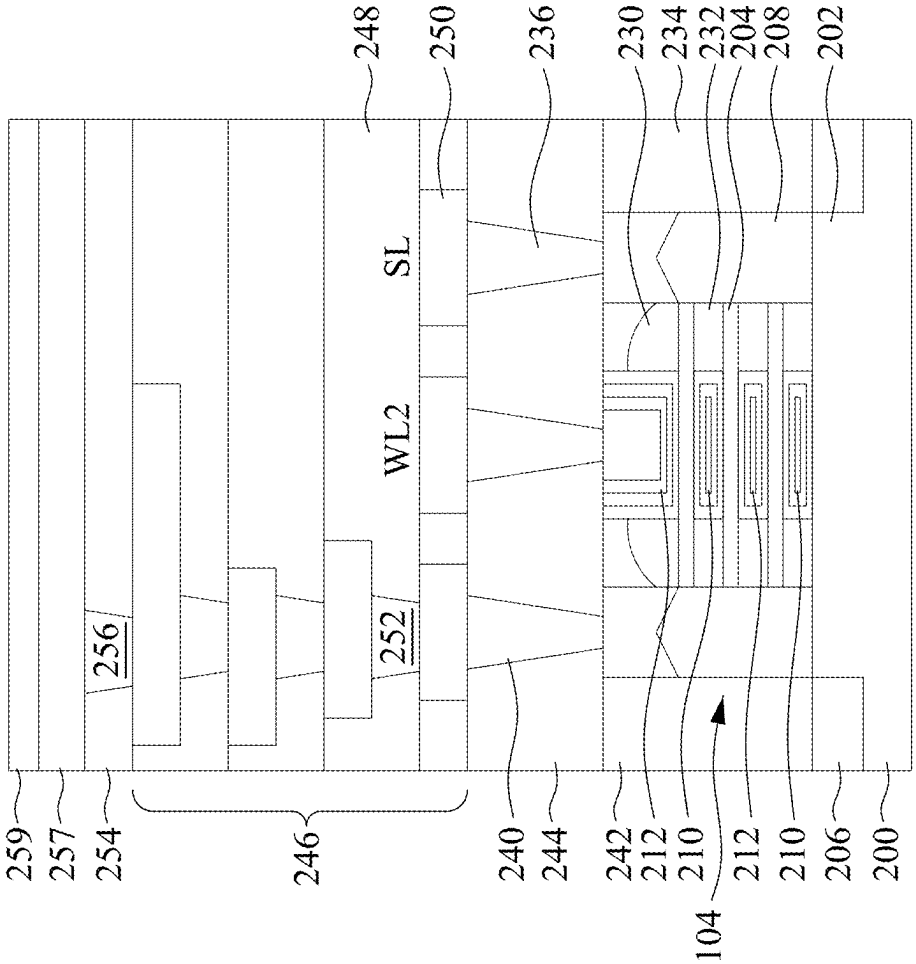
248
250
236
230
234
232
204
208
202
SL
WL2
256
252
259
257
254
246
240
244
242
212
210
104
212
210
206
200

Fig. 23

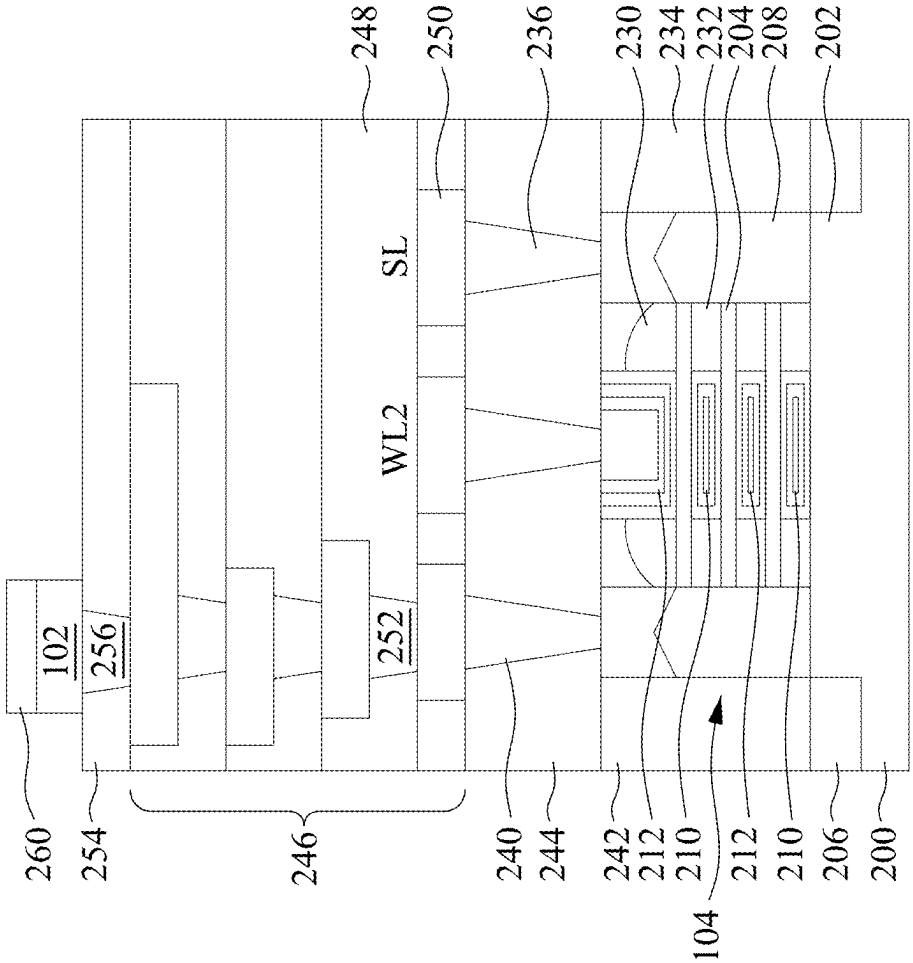
248
250
236
230
234
232
204
208
202
SL
WL2
102
256
252
260
254
246
240
244
242
212
210
104
212
210
206
200

Fig. 24

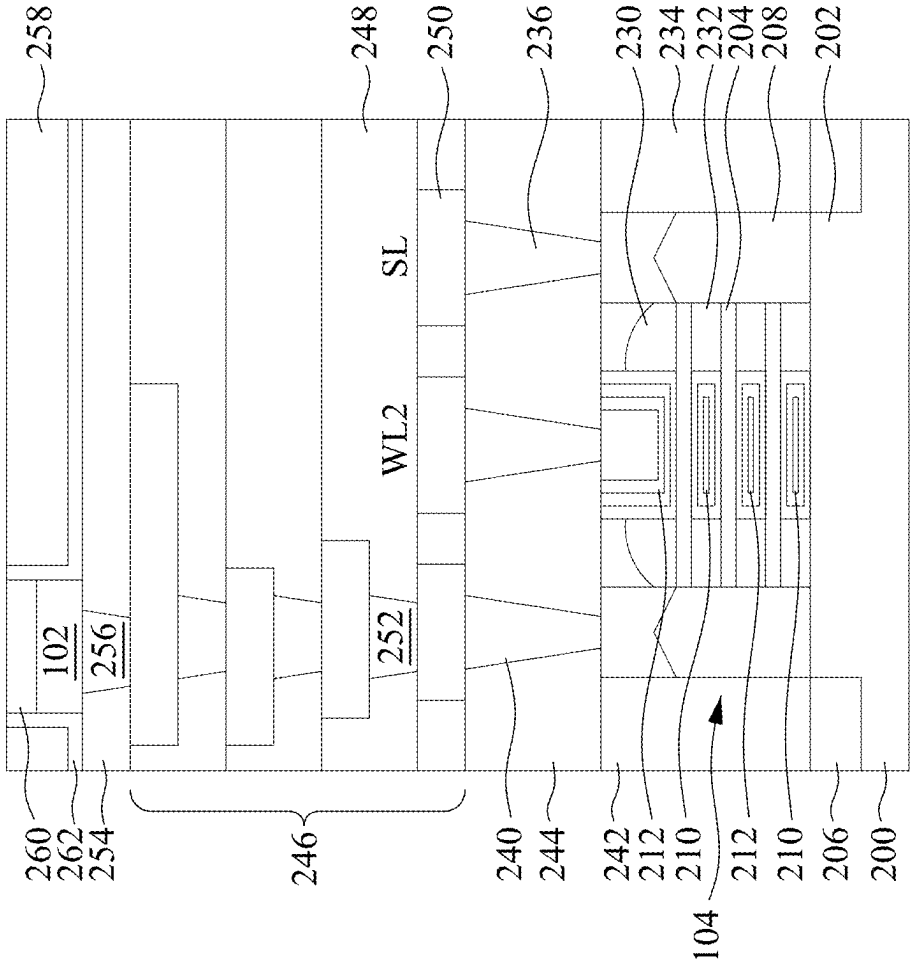
258
248
250
236
230
234
232
204
208
202
SL
WL2
102
256
252
260
262
254
246
240
244
242
212
210
104
212
210
206
200

Fig. 25

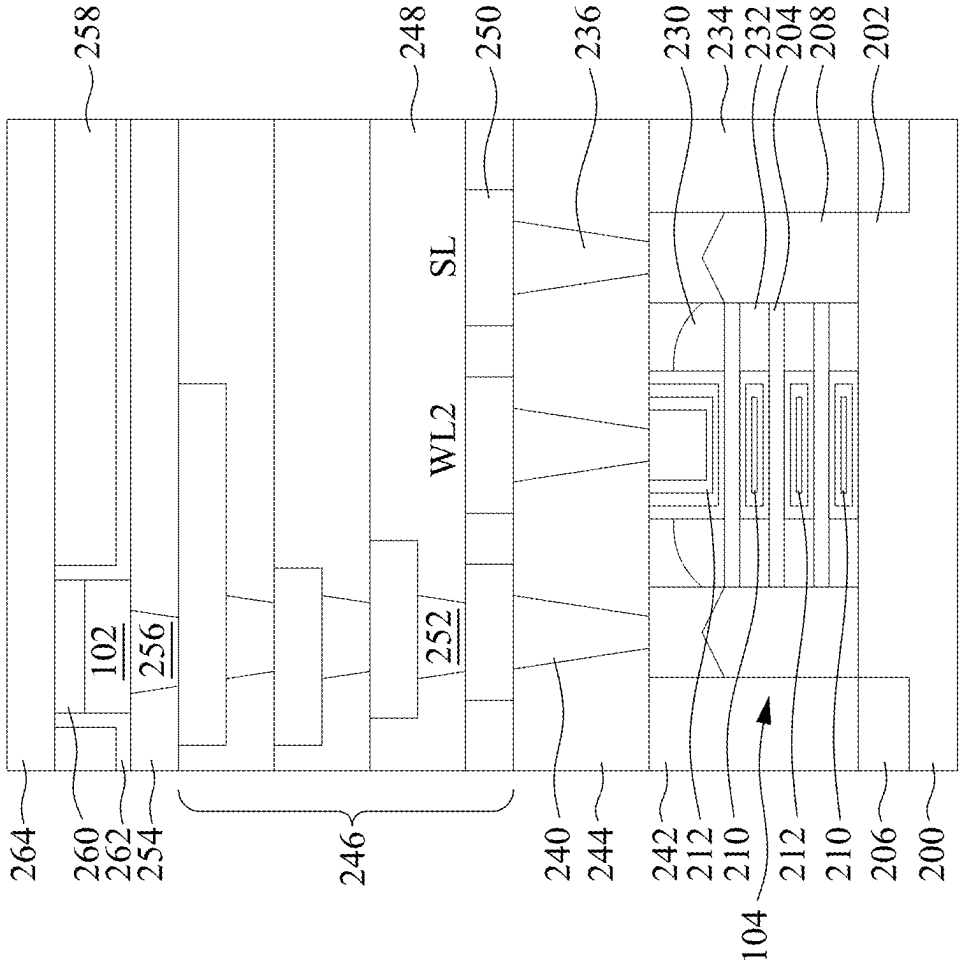
258
248
250
236
230
234
232
204
208
202
SL
WL2
102
256
252
264
260
262
254
246
240
244
242
212
210
104
212
210
206
200

Fig. 26

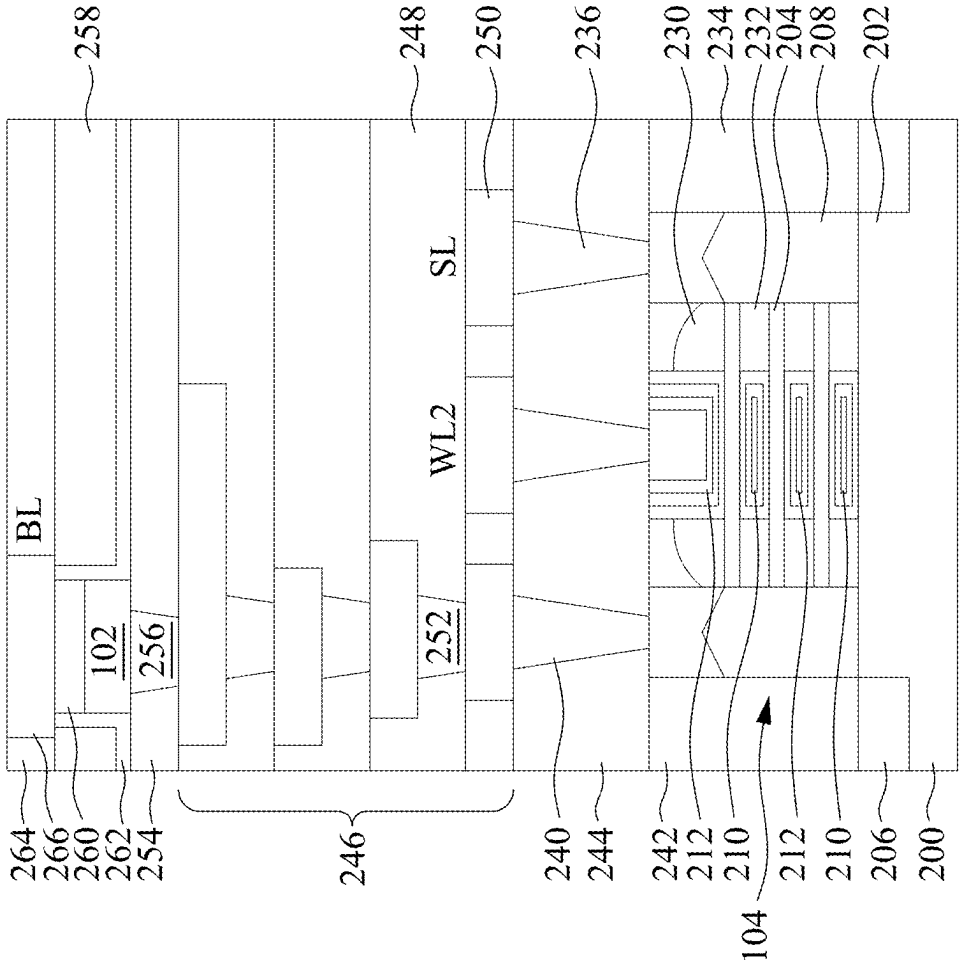
258
248
250
236
230
234
232
204
208
202
BL
SL
WL2
102
256
252
264
266
260
262
254
246
240
244
242
212
210
104
212
210
206
200

Fig. 27

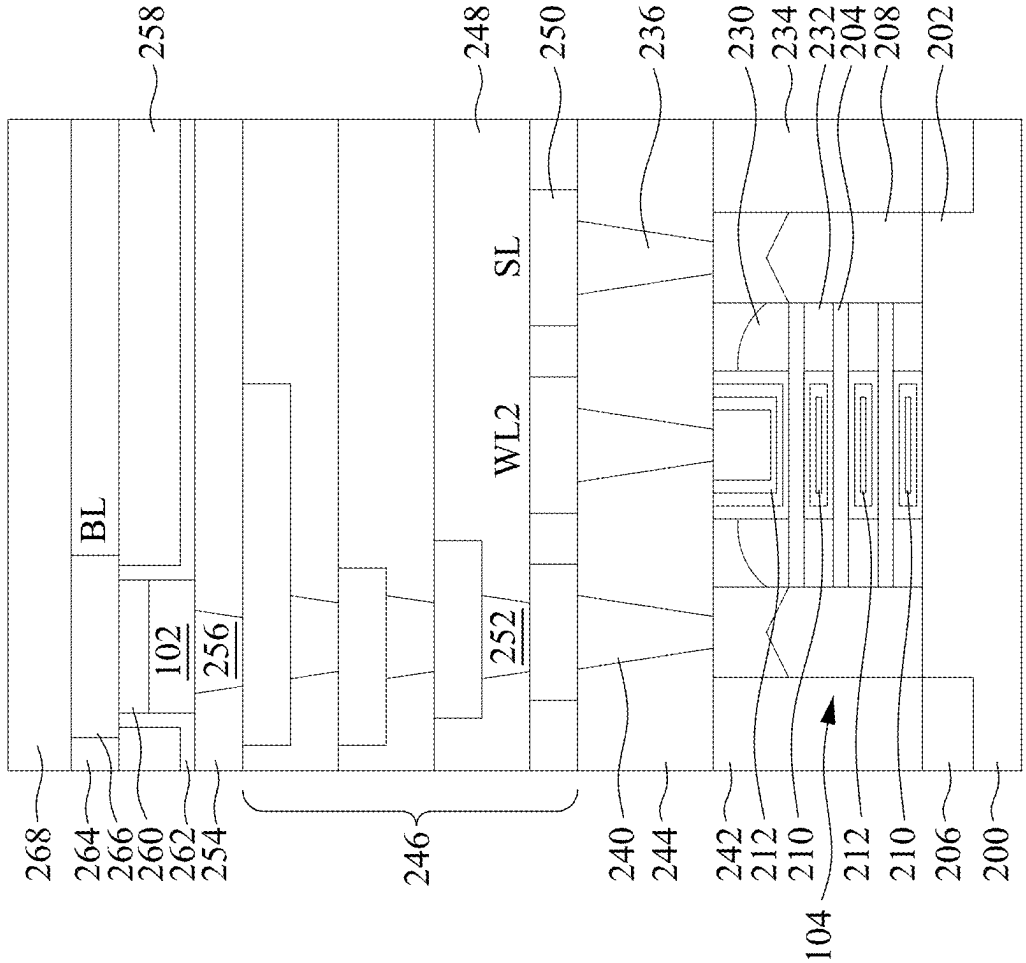
258
248
250
236
230
234
232
204
208
202
SL
WL2
BL
102
256
252
268
264
266
260
262
254
246
240
244
242
212
210
104
212
210
206
200

Fig. 28

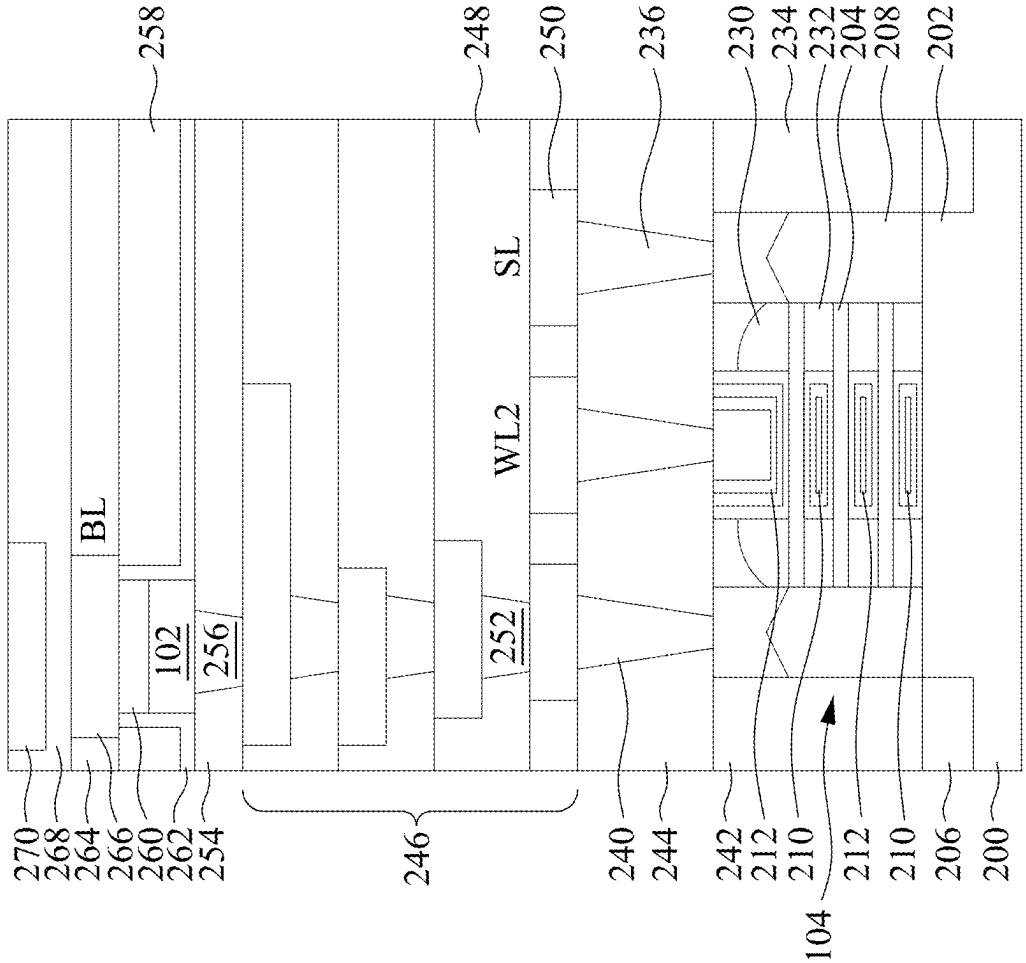
258
248
250
236
230
234
232
204
208
202
SL
WL2
BL
102
256
252
270
268
264
266
260
262
254
246
240
244
242
212
210
104
212
210
206
200

Fig. 29

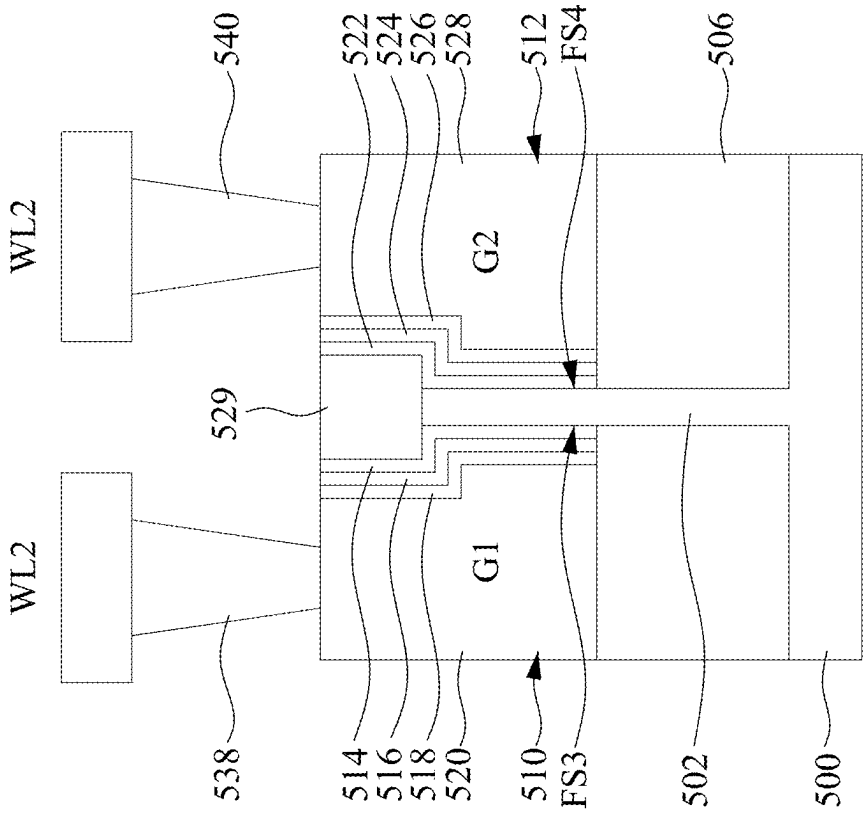

Fig. 30B

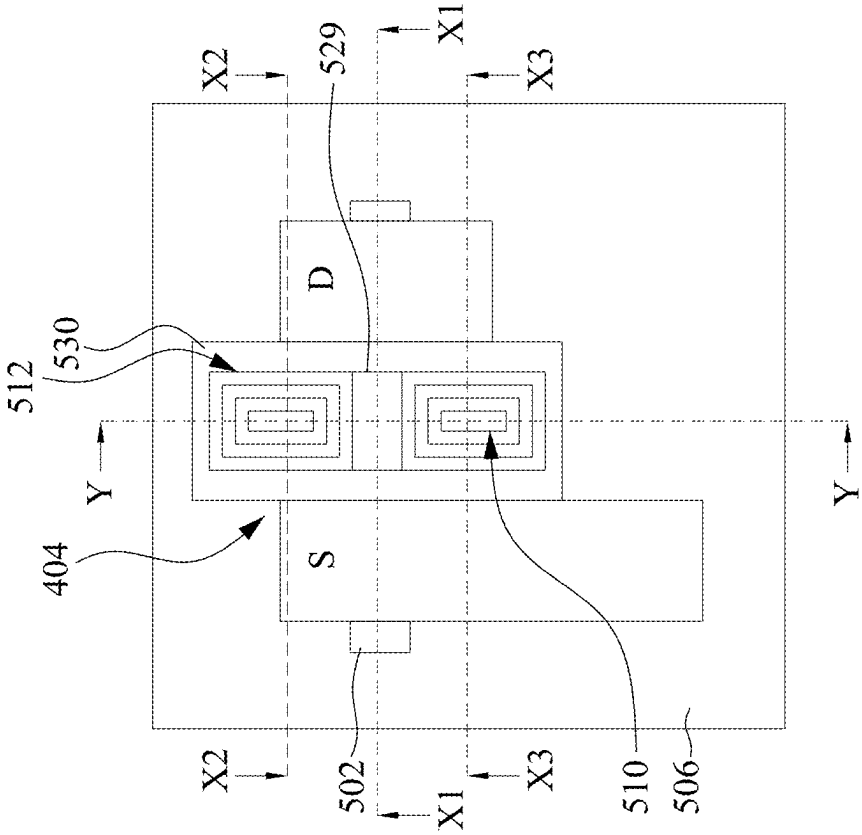

Fig. 30A

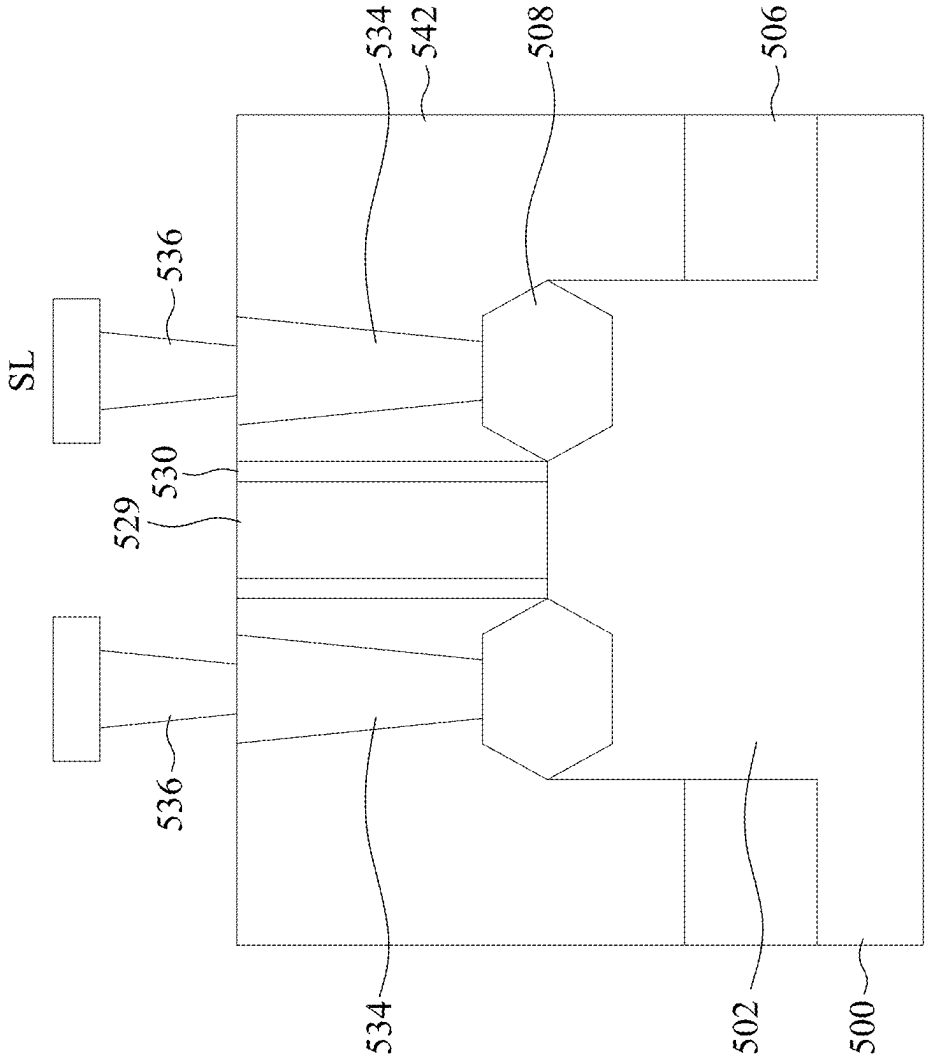

Fig. 30C

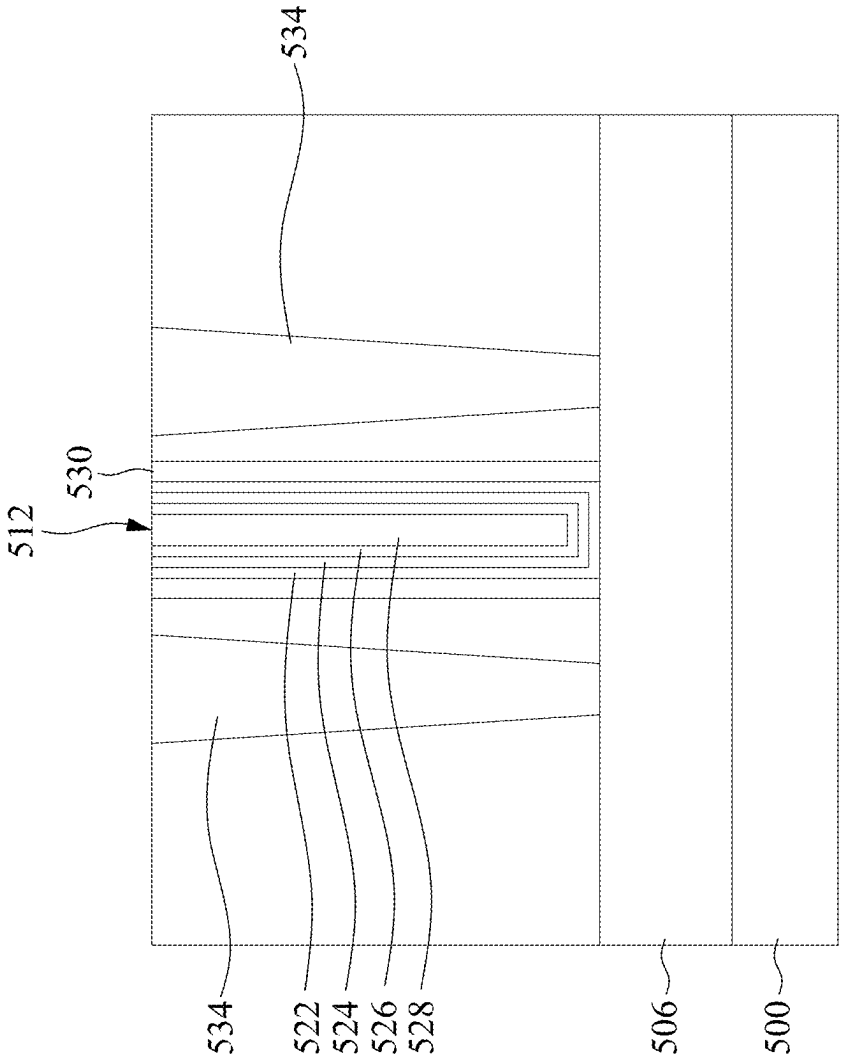

Fig. 30D

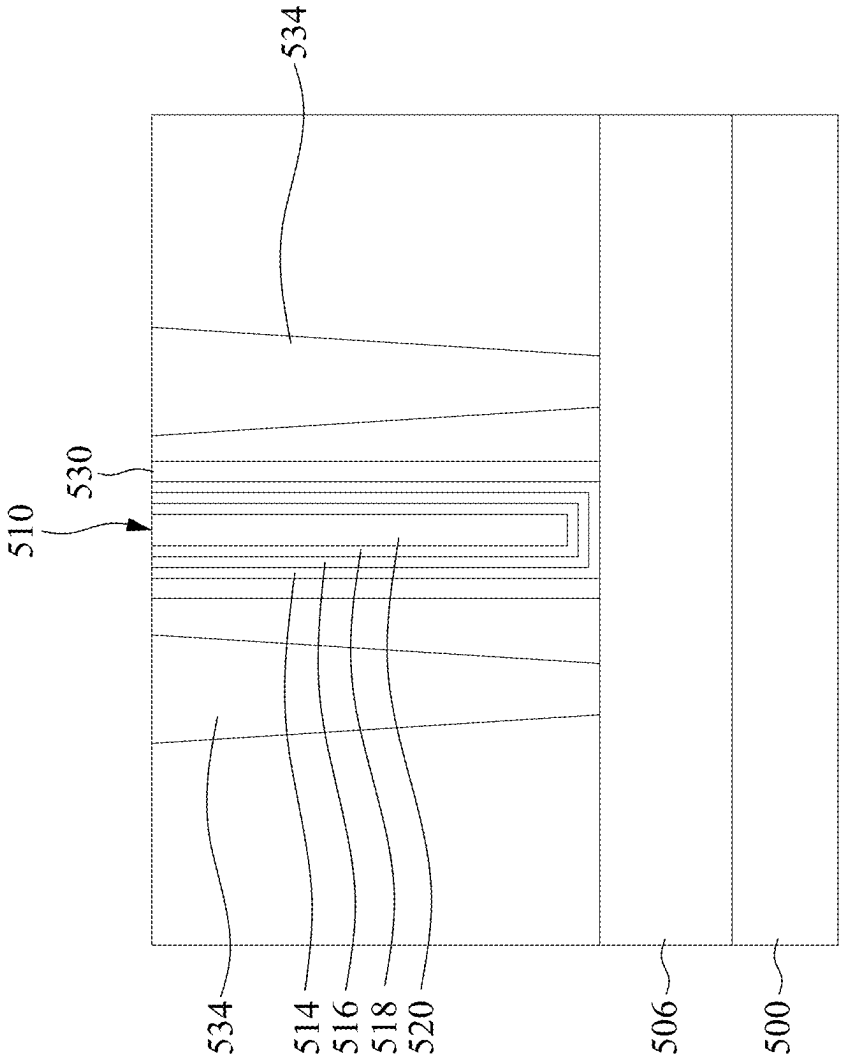

Fig. 30E

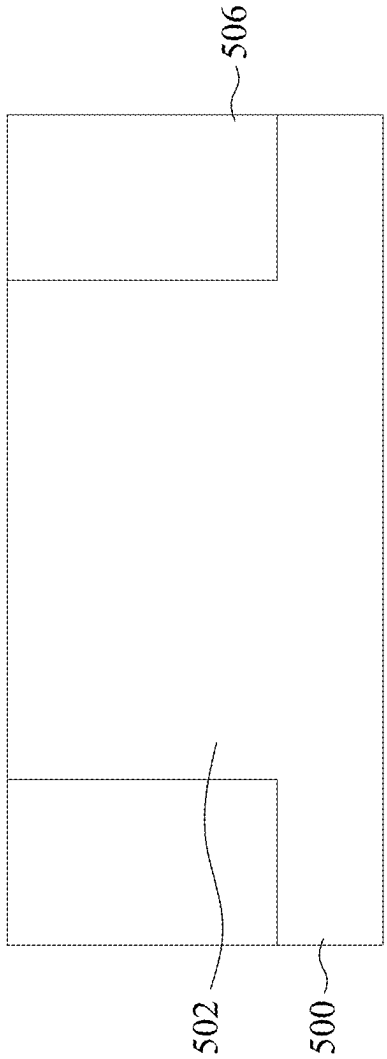

Fig. 31A

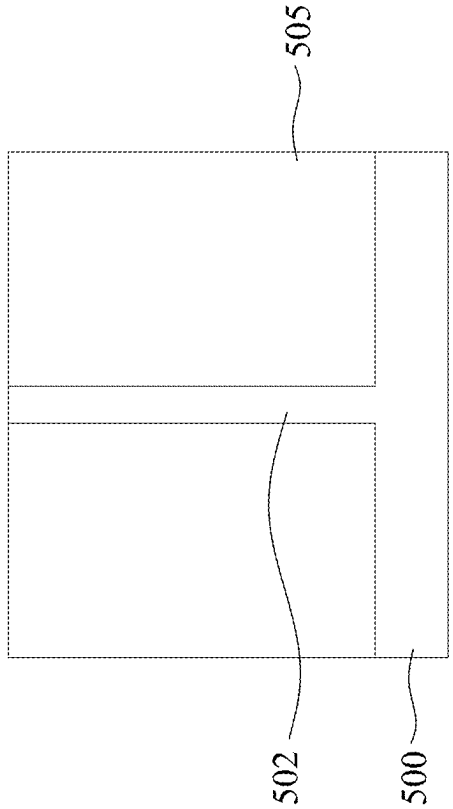

Fig. 31B

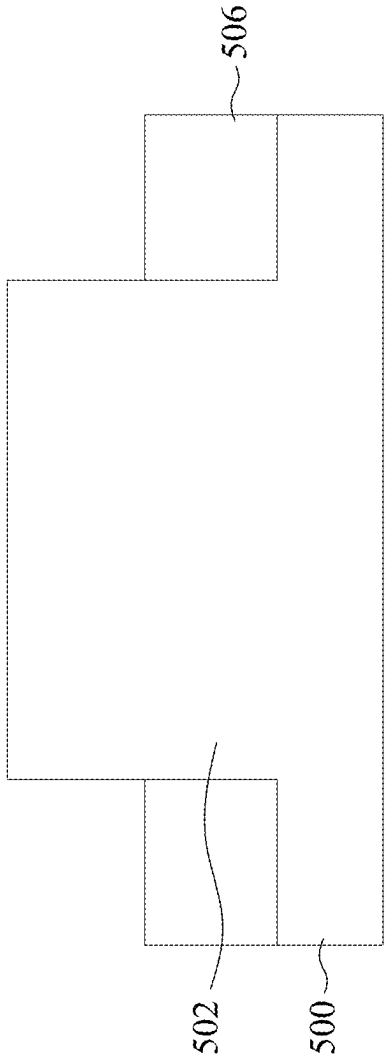

Fig. 32A

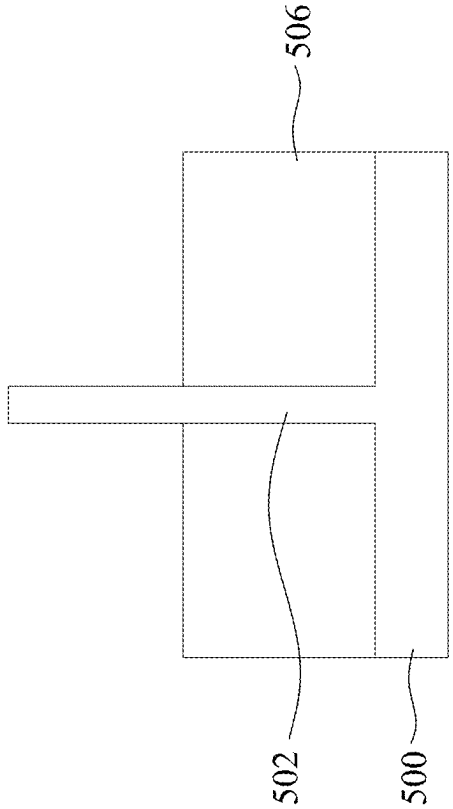

Fig. 32B

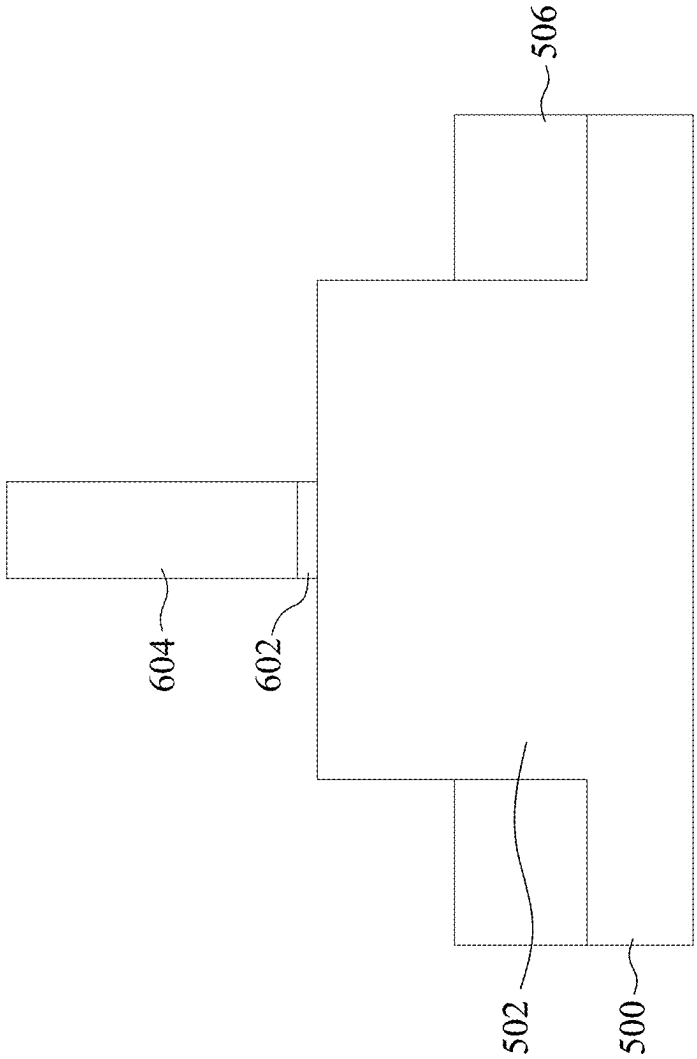

Fig. 33A

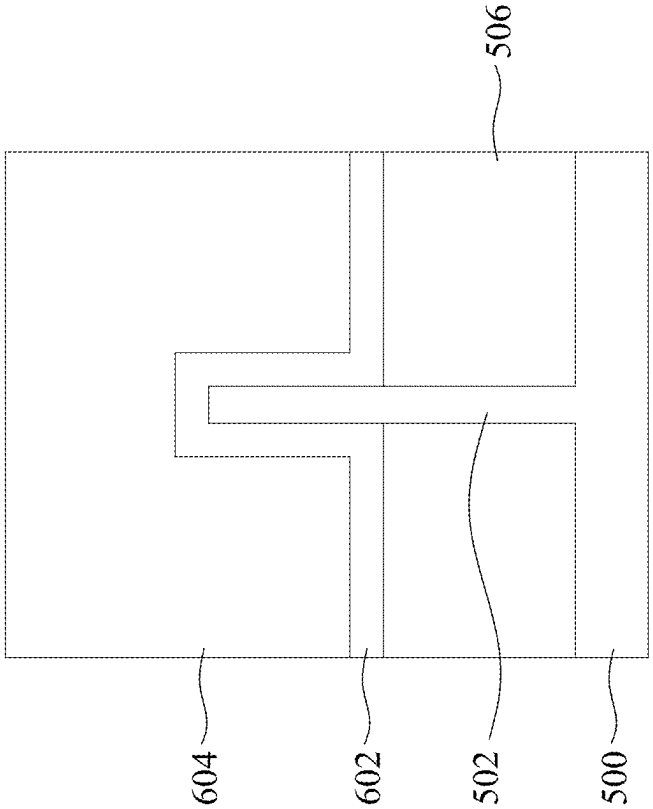

Fig. 33B

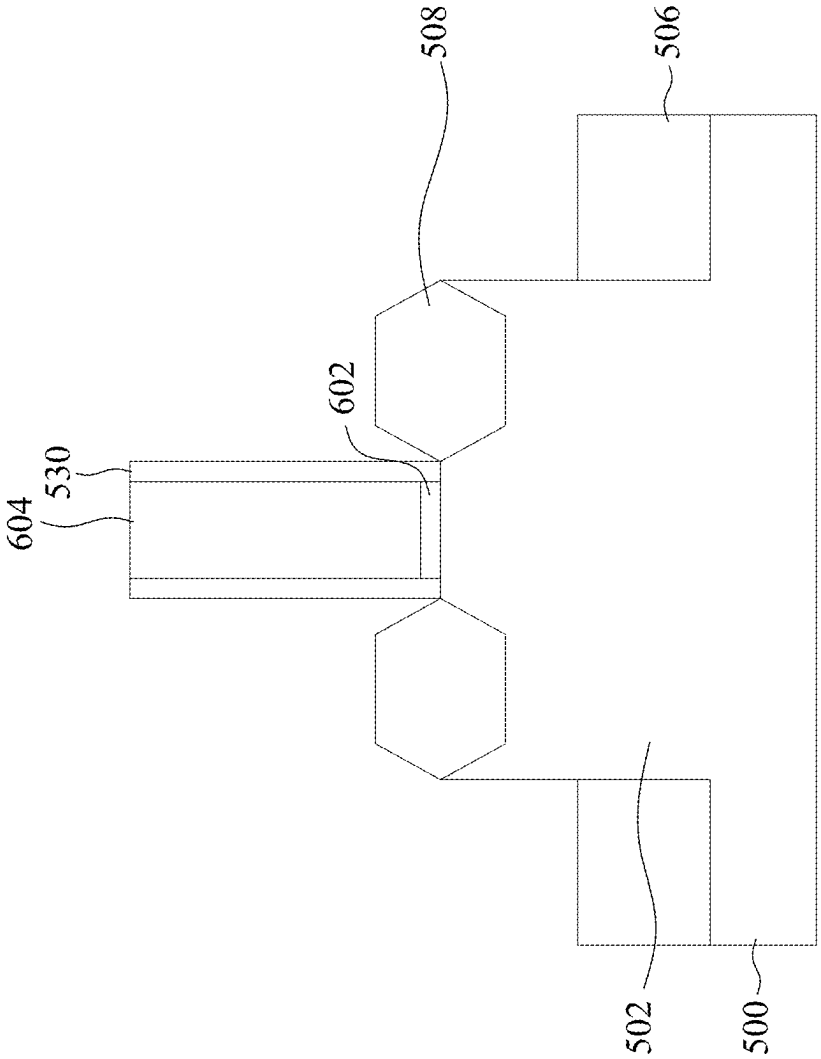

Fig. 34A

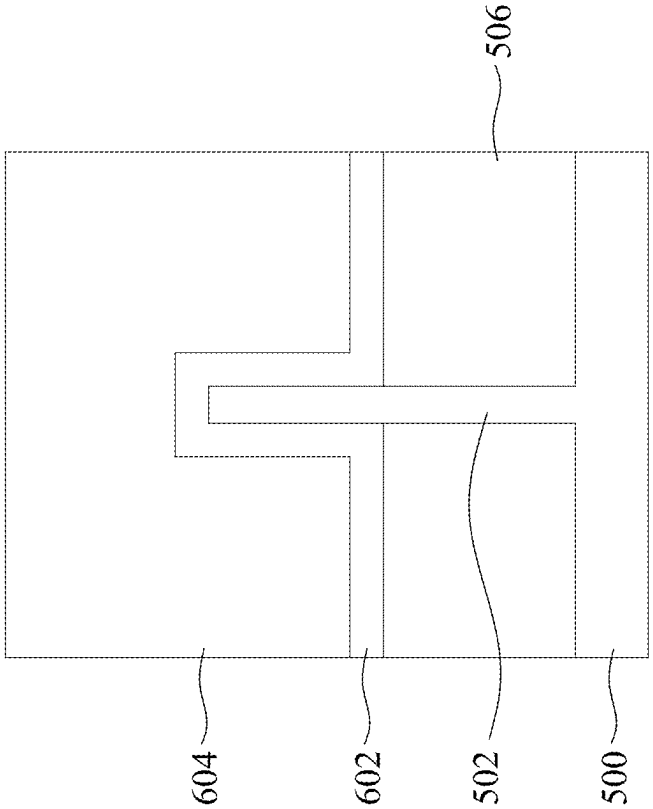

Fig. 34B

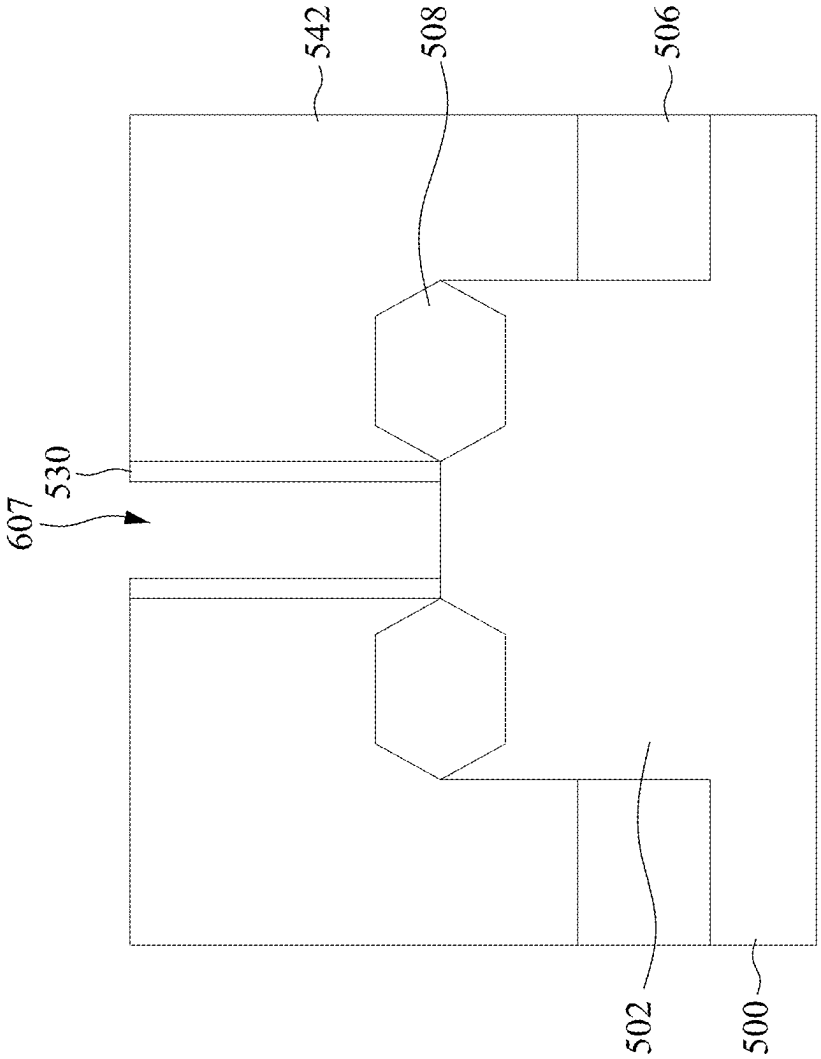

Fig. 35A

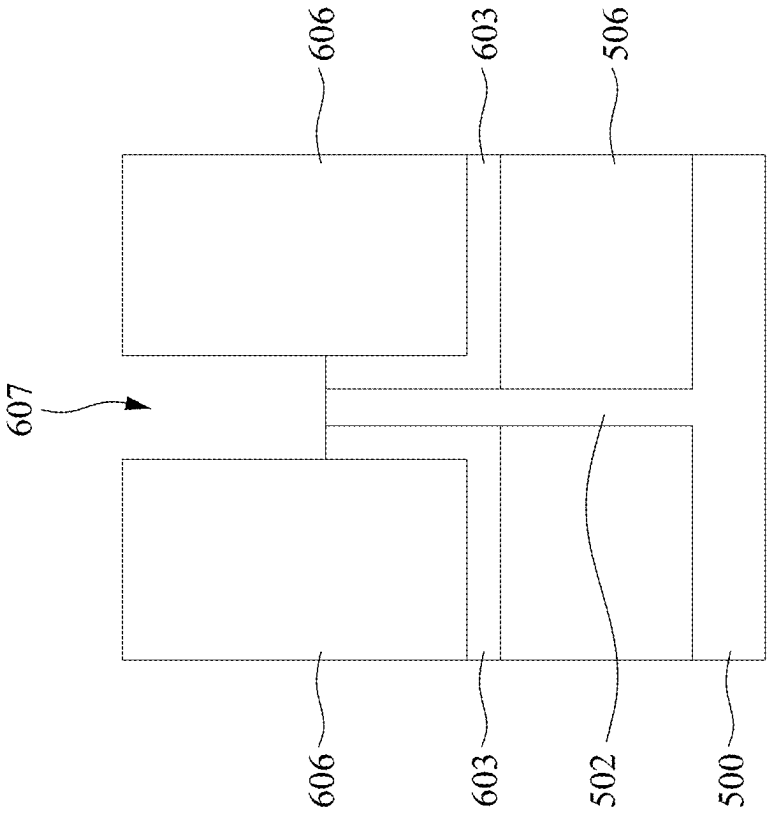

Fig. 35B

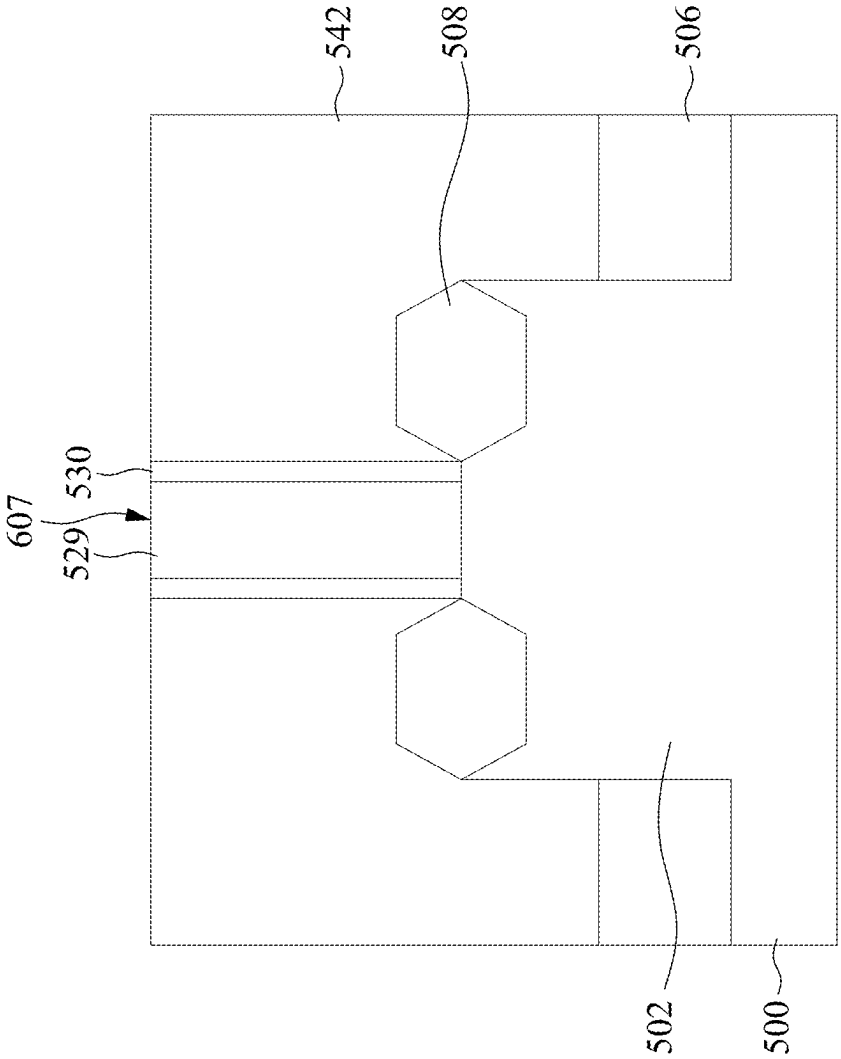

Fig. 36A

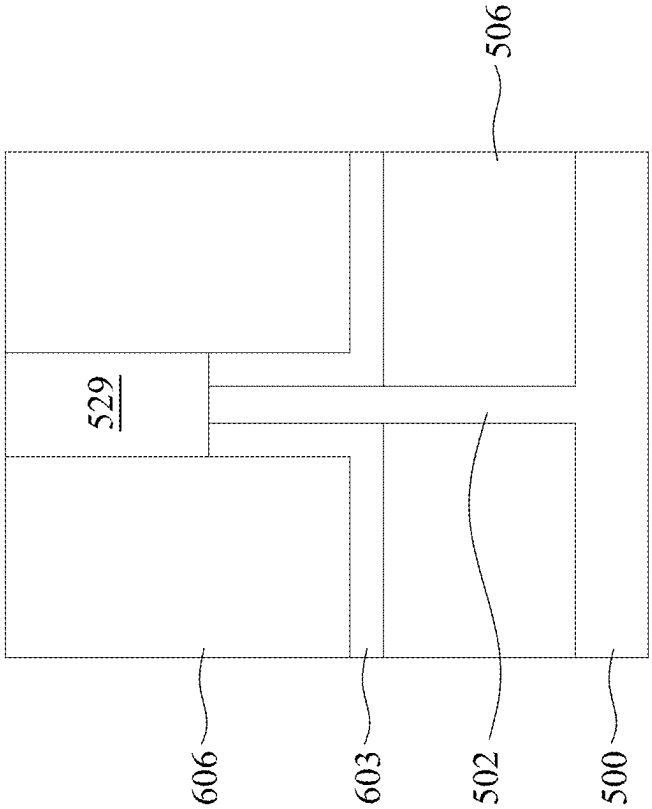

Fig. 36B

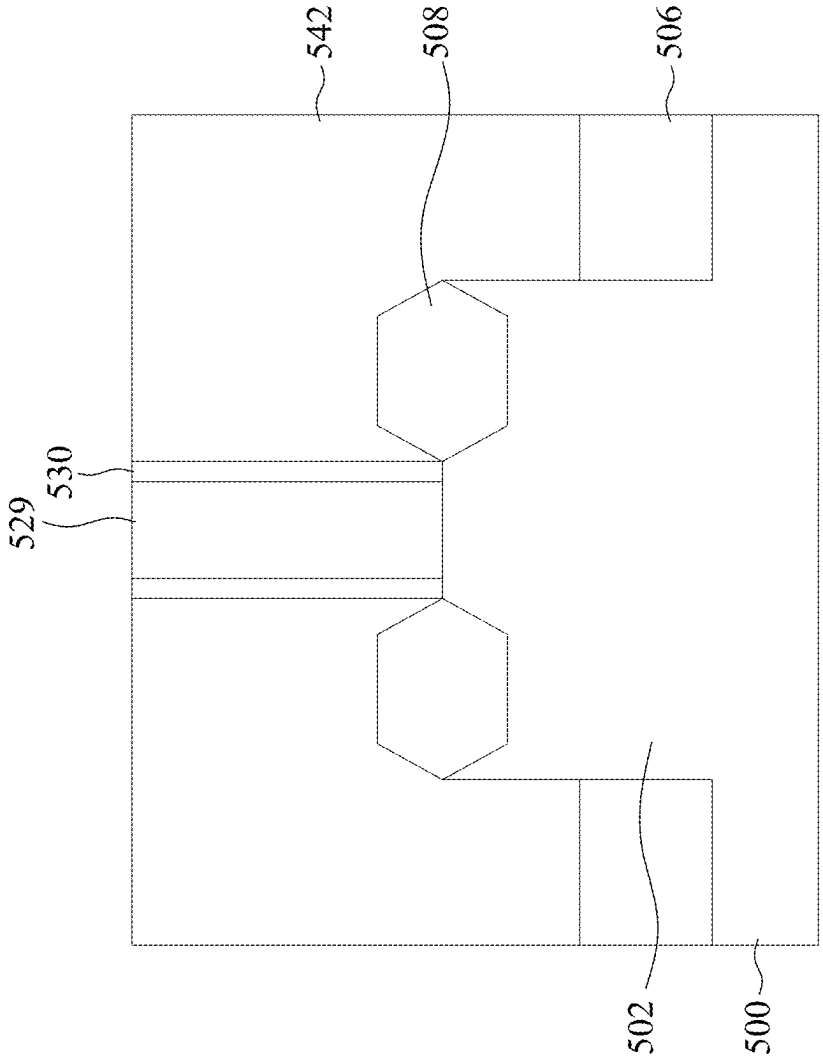

Fig. 37A

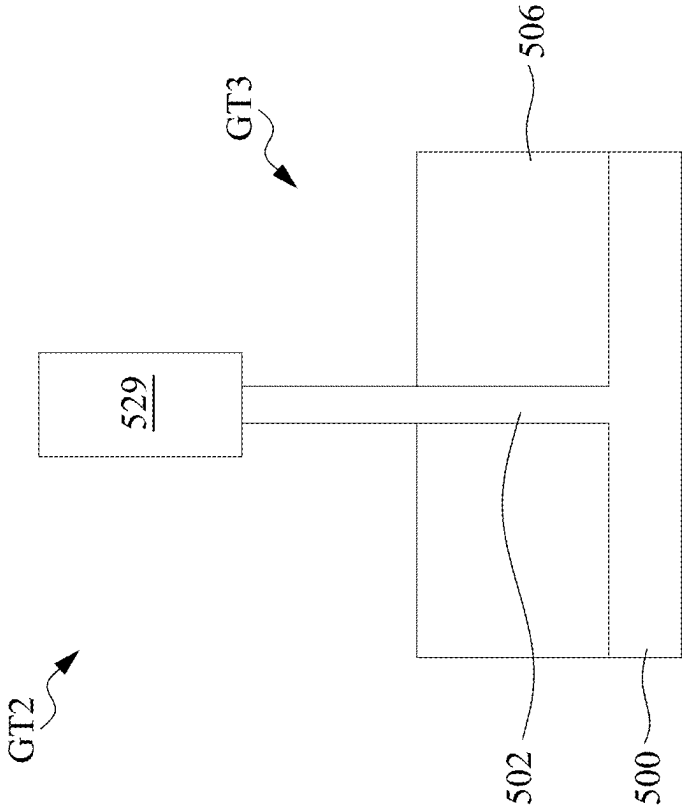

Fig. 37B

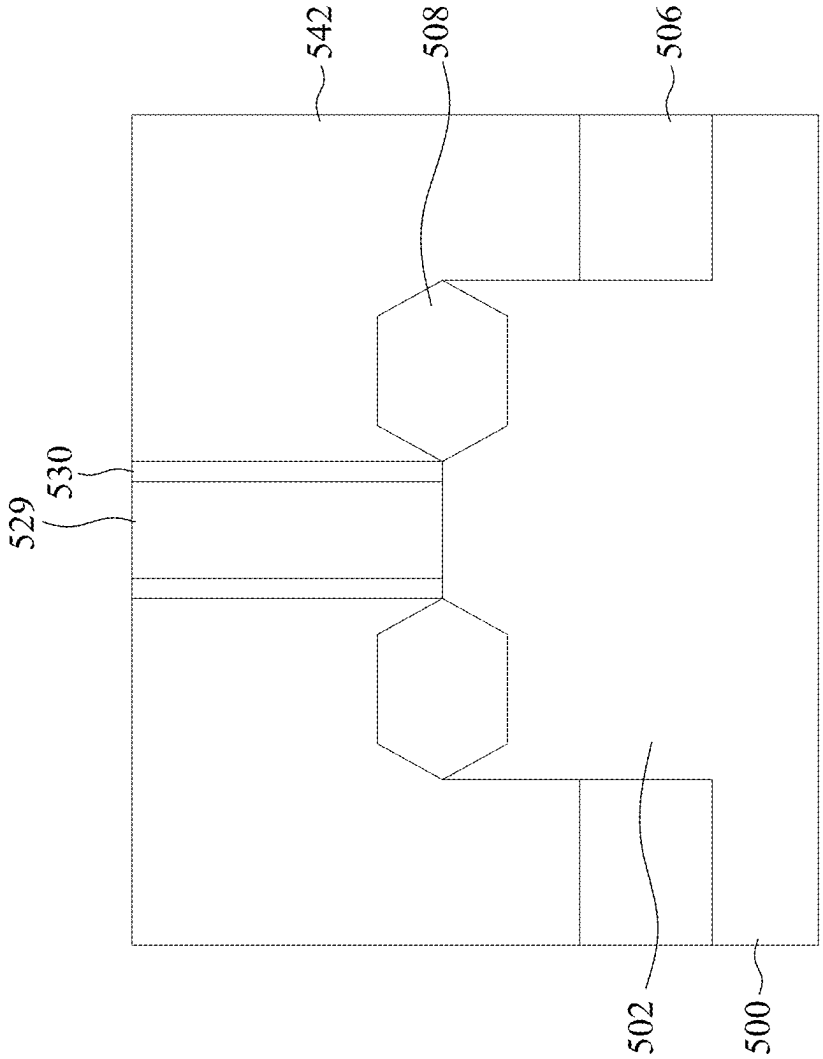

Fig. 38A

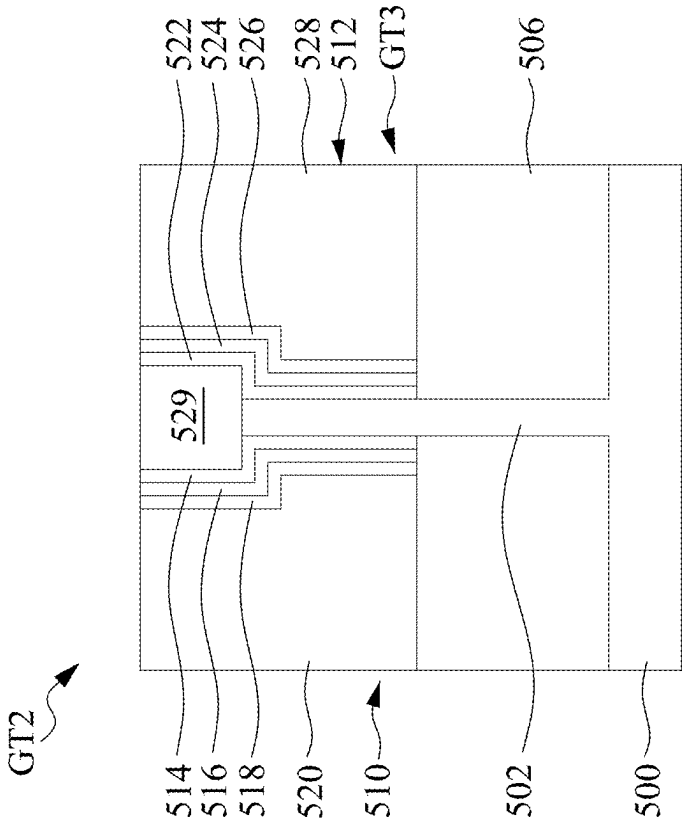

Fig. 38B

INTEGRATED CIRCUIT STRUCTURE AND FABRICATION THEREOF

PRIORITY CLAIM AND CROSS-REFERENCE

[0001] The present application is a divisional application of U.S. application Ser. No. 17/689,784, filed Mar. 8, 2022, which claims the benefit of U.S. Provisional Application No. 63/224,361, filed on Jul. 21, 2021, all of which are incorporated herein by reference in their entireties.

BACKGROUND

[0002] Magnetization switching using magnetic fields produced by current lines has been previously used for magnetic information storage or magnetic random access memory (MRAM) technology. More recently, magnetization switching by spin-polarized current (or by a mechanism called spin transfer) has been demonstrated for MRAM technology.

BRIEF DESCRIPTION OF THE DRAWINGS

[0003] Aspects of the present disclosure are best understood from the following detailed description when read with the accompanying figures. It is noted that, in accordance with the standard practice in the industry, various features are not drawn to scale. In fact, the dimensions of the various features may be arbitrarily increased or reduced for clarity of discussion.

[0004] FIG. **1** illustrates a schematic view of an 1T-1MTJ MRAM memory cell in accordance with some embodiments of the present disclosure.

[0005] FIG. **2**A is a cross-sectional view illustrating a film stack of an MTJ cell in accordance with some embodiments of the present disclosure.

[0006] FIG. **2**B is a cross-sectional view illustrating an SAF layer in the MTJ cell in accordance with some embodiments of the present disclosure.

[0007] FIGS. **3**A and **3**B show operations of an MTJ cell having in-plane easy magnetization axes, in accordance with some embodiments of the present disclosure.

[0008] FIGS. **3**C and **3**D show operations of an MTJ cell having perpendicular easy magnetization axes, in accordance with some embodiments of the present disclosure.

[0009] FIGS. **4**A-**4**D illustrate AND gate logic operations performed using an 1T-1MTJ MRAM cell in accordance with some embodiments of the present disclosure.

[0010] FIG. **5** illustrates a table about the AND gate logic function as shown in FIGS. **4**A-**4**D.

[0011] FIGS. **6**A-**6**D illustrate OR gate logic operations performed using an 1T-1MTJ MRAM cell in accordance with some embodiments of the present disclosure.

[0012] FIG. **7** illustrates a table about the OR gate logic function as shown in FIGS. **6**A-**6**D.

[0013] FIGS. **8**A and **8**B illustrate a refresh or initial operation of an MTJ cell in accordance with some embodiments of the present disclosure.

[0014] FIG. **9** illustrates a read operation of an MTJ cell in accordance with some embodiments of the present disclosure.

[0015] FIG. **10**A is a plan view of an integrated circuit (IC) structure zoomed-in to an MRAM access transistor in accordance with some embodiments of the present disclosure.

[0016] FIG. **10**B is a cross-sectional view of the IC structure of FIG. **10**A obtained from a first cut, which is along a direction of current flow between source/drain regions of the MRAM access transistor.

[0017] FIG. **10**C is a cross-sectional view of the IC structure of FIG. **10**A, wherein the cross-sectional view is obtained from a second cut, which is along a direction perpendicular to the direction of current flow between source/drain regions of the MRAM access transistor.

[0018] FIGS. **11**A-**29** are top views and cross-sectional views of intermediate stages in the manufacturing of an IC structure having 1T-1MTJ MRAM cells with logic functions, in accordance with some embodiments of the present disclosure.

[0019] FIG. **30**A is a plan view of an integrated circuit (IC) structure zoomed-in to a fin-type MRAM access transistor, in accordance with some embodiments of the present disclosure.

[0020] FIG. **30**B is a cross-sectional view of the IC structure of FIG. **30**A obtained from a first cut, which is perpendicular to a longitudinal axis of the fin of the fin-type MRAM access transistor.

[0021] FIG. **30**C is a cross-sectional view of the IC structure of FIG. **30**A obtained from a second cut, which is along the longitudinal axis of the fin of the fin-type MRAM access transistor.

[0022] FIG. **30**D is a cross-sectional view of the IC structure of FIG. **30**A obtained from a third cut, which is along the longitudinal axis of the fin of the fin-type MRAM access transistor but offset from the fin.

[0023] FIG. **30**E is a cross-sectional view of the IC structure of FIG. **30**A obtained from a fourth cut, which is along the longitudinal axis of the fin of the fin-type MRAM access transistor but offset from the fin.

[0024] FIGS. **31**A-**38**B are cross-sectional views of intermediate stages in the manufacturing of an FinFET having two independent gates, in accordance with some embodiments of the present disclosure.

DETAILED DESCRIPTION

[0025] The following disclosure provides many different embodiments, or examples, for implementing different features of the provided subject matter. Specific examples of components and arrangements are described below to simplify the present disclosure. These are, of course, merely examples and are not intended to be limiting. For example, the formation of a first feature over or on a second feature in the description that follows may include embodiments in which the first and second features are formed in direct contact, and may also include embodiments in which additional features may be formed between the first and second features, such that the first and second features may not be in direct contact. In addition, the present disclosure may repeat reference numerals and/or letters in the various examples. This repetition is for the purpose of simplicity and clarity and does not in itself dictate a relationship between the various embodiments and/or configurations discussed.

[0026] Further, spatially relative terms, such as "beneath," "below," "lower," "above," "upper" and the like, may be used herein for ease of description to describe one element or feature's relationship to another element(s) or feature(s) as illustrated in the figures. The spatially relative terms are intended to encompass different orientations of the device in use or operation in addition to the orientation depicted in the figures. The apparatus may be otherwise oriented (rotated 90

degrees or at other orientations) and the spatially relative descriptors used herein may likewise be interpreted accordingly.

[0027] As used herein, "around," "about," "approximately," or "substantially" may generally mean within 20 percent, or within 10 percent, or within 5 percent of a given value or range. Numerical quantities given herein are approximate, meaning that the term "around," "about," "approximately," or "substantially" can be inferred if not expressly stated. One skilled in the art will realize, however, that the values or ranges recited throughout the description are merely examples, and may be reduced with the downscaling of the integrated circuits.

[0028] Magneto-resistive random-access memory (MRAM) cells each comprise a magnetic tunnel junction (MTJ) cell vertically arranged within an integrated chip back-end-of-the-line (BEOL) between conductive electrodes. An MTJ cell includes first and second ferromagnetic layers separated by a tunnel barrier layer. One of the ferromagnetic layers (often referred to as a "reference layer" or "pinned layer") has a fixed magnetization direction, while the other ferromagnetic layer (often referred to as a "free layer") has a variable magnetization direction. For MTJ cells with positive tunnelling magnetoresistance (TMR), if the magnetization directions of the reference layer and free layer are in a parallel orientation, it is more likely that electrons will tunnel through the tunnel barrier layer, such that the MTJ cell is in a low-resistance state. Conversely, if the magnetization directions of the reference layer and free layer are in an anti-parallel orientation, it is less likely that electrons will tunnel through the tunnel barrier layer, such that the MTJ cell is in a high-resistance state. Consequently, the MTJ cell can be switched between two states of electrical resistance, a first state with a low resistance (R_P: magnetization directions of reference layer and free layer are parallel) and a second state with a high resistance (R_{AP}: magnetization directions of reference layer and free layer are anti-parallel). It is noted that MTJ cells can also have a negative TMR, e.g., lower resistance for anti-parallel orientation and higher resistance for parallel orientation, and though the following description is written in the context of positive TMR based MTJ cells, it will be appreciated the present disclosure is also applicable to MTJ cells with a negative TMR.

[0029] Because of their binary nature, MTJ cells can be used to store digital data, with the low resistance state R_P corresponding to a first data state (e.g., logical "0"), and the high-resistance state R_{AP} corresponding to a second data state (e.g., logical "1"). In some embodiments, to read data from such an MRAM cell, the MTJ cell's resistance R_{MTJ} (which can vary between R_P and R_{AP}, depending on the data state that is stored) can be compared to a reference cell's resistance, R_{Ref} (where R_{Ref}, for example, is designed to be in between R_P and R_{AP}, for instance an average). In some techniques, a given read voltage V_{Read} is applied to the MRAM cell and to the reference cell. This read voltage results in a read current flowing through the MTJ cell (I_{read}) and a reference current flowing through the reference cell (I_{Ref}). If the MTJ cell is in a parallel state, the read current I_{read} has a first value (I_{read-P}) greater than I_{Ref}; while if the MTJ cell is in an anti-parallel state, the read current I_{read} has a second value ($I_{read-AP}$) that is less than I_{Ref}. Thus, during a read operation, if I_{read} is greater than I_{Ref}, then a first digital value (e.g., "0") is read from the MRAM cell. On the other hand, if I_{MTJ} is less than I_{Ref} for the read operation, then a second digital value (e.g., "1") is read from the MRAM cell.

[0030] Each MRAM cell includes a MTJ cell and an access transistor serving to access the MTJ cell (e.g., to read data from the MTJ cell and/or write data to the MTJ cell). A Gate terminal of the access transistor is coupled to a word line, a source terminal of the access transistor is coupled to a source line, a drain terminal of the access transistor is coupled to one end of the MTJ cell, and another end of the MTJ cell is coupled to a bit line. To write data to an MRAM cell, a current greater than a critical current (I_c) required to switch a magnetization direction of free layer is provided through the MTJ cell. Currents that are not greater than the critical current will not cause a switching in the magnetization direction of free layer and therefore not write data to the MRAM cell. During a write operation, a voltage greater than a threshold voltage of the access transistor is applied to the word line, thereby turning on the access transistor to form a conductive path between the source line and the MTJ cell. The bit line voltage and the source line voltage thus form a potential difference that causes a current, which is greater than the critical current, to flow through the MTJ cell. During a read operation, a voltage is again applied to the word line to turn on the access transistor. The source line voltage and the bit line voltage thus form a potential difference that causes a read current to pass through the MTJ cell. The read current passing through the MTJ cell has a value that is dependent upon a resistance state of the MTJ cell. For example, if the MTJ cell is in a low-resistance state (e.g., storing a logical "0") the read current will be greater than if the MTJ cell is in a high-resistance state (e.g., storing a logical "1"). In this case, each MTJ cell is accessed by a single transistor, and thus this type of MRAM architecture is called 1T-1MTJ memory cell.

[0031] The present disclosure, in some embodiments, provides 1T-1MTJ MRAM cells with AND logic functions and/or OR logic functions, by using access transistors each having multiple independent gates coupled to different inputs. As a result, each 1T-1MTJ MRAM cell not only serves as a memory device for storing data, but also serves as a logic device for performing logic computation, which in turn realizes in-memory computing using a single 1T-1MTJ MRAM cell. Because logic operations can be performed using a single 1T-1MTJ MRAM cell, device numbers required for logic operations can be reduced. Moreover, the logic operation results of each MRAM cell can be stored in its MTJ cell, so that data transfer between memory devices and logic devices can be skipped.

[0032] FIG. **1** illustrates a schematic view of an 1T-1MTJ MRAM memory cell in accordance with some embodiments of the present disclosure. The MTJ memory cell includes a magnetic tunnel junction (MTJ) cell **102** and an access transistor **104**. A bit line BL is coupled to one end of the MTJ cell **102**, and a source line SL is coupled to an opposite end of the MTJ cell **102** through the access transistor **104**. A first word line WL**1** is coupled to a first gate terminal G**1** of the access transistor **104**. A second word line WL**2** is coupled to a second gate terminal G**2** of the access transistor **104**. Thus, application of a suitable first word line voltage to the first gate terminal G**1** and/or a suitable second word line voltage to the second gate terminal G**2** of the access transistor **104** can turn on the access transistor **104**, thereby allowing a current flowing though the MTJ cell **102**.

[0033] When applying a given bit line voltage to the bit line BL and a given source line voltage to the source line SL, the current flowing through the MTJ cell **102** may depend on how many gates of the access transistor **104** are supplied with high voltage V_{DD} by corresponding word lines. This may be due to that a drain current of the access transistor **104** is in positive correlation with an equivalent gate voltage of the access transistor **104** (i.e., net effect of voltages applied to gates terminals G**1**, G**2**). Once the current flowing through the MTJ cell **102** is greater than the critical current required to switch a magnetization direction of free layer in the MTJ cell **102**, the magnetization direction of free layer can be switched, which in turn allows the MTJ cell **102** to be switched between two states of electrical resistance, a first state with a low resistance (R_P: magnetization directions of reference layer and free layer are parallel) and a second state with a high resistance (R_{AP}: magnetization directions of reference layer and free layer are anti-parallel). As a result, the resistance state of the MTJ cell **102** depends on the voltages applied to the first and second word lines WL**1** and WL**2**, and therefore the voltages applied to the first and second word lines WL**1** and WL**2** can serve as two inputs of an AND gate or an OR gate, and the resistance state of the MTJ cell **102** can serve as an output of the AND gate or the OR gate. The 1T-1MTJ MRAM cell can thus perform an AND2 logic function or an OR2 logic function.

[0034] FIG. **2**A is a cross-sectional view illustrating a film stack of an MTJ cell **102** in accordance with some embodiments of the present disclosure. The MTJ cell **102** includes a bottom electrode **124** coupled to the drain terminal of the access transistor **104**. In some embodiments, the bottom electrode **124** includes Ta, TaN, W, Ru, the like, and/or alloys thereof. The bottom electrode **124** has a thickness in a range from about 1 nm to about 50 nm. The MTJ cell **102** further includes a seed layer **125** over the bottom electrode **124**. The seed layer **125** includes Pt, Ta, Ru, the like, and/or alloys thereof, and has a thickness in a range from about 1 nm to about 50 nm.

[0035] The MTJ cell **102** further includes a pinned layer **126** formed over the seed layer **125**. In some embodiments, the pinned layer **126** is a synthetic anti-ferromagnetic (SAF) layer. The SAF layer **126** can serve to pin the magnetization direction of the reference layer **128** in a fixed direction. Pinning the magnetization direction of the reference layer **128** allows the MTJ cell **102** of to be toggled between the low-resistance state and the high-resistance state by changing the magnetization direction of the free layer **130** relative to the reference layer **128**.

[0036] The SAF layer **126** may include multiple layers of different materials, in some embodiments. For example, the SAF layer **126** may comprise a stack of one or more ferromagnetic layers and one or more non-magnetic layers. For example, as illustrated in FIG. **2**B, the SAF layer **126** may include two ferromagnetic layers **132** and **134** and a non-magnetic spacer layer **133** sandwiched between the ferromagnetic layers **132** and **134**, or may be a stack of alternating non-magnetic layers and ferromagnetic layers. In some embodiments, the ferromagnetic layers **132** and **134** may be formed of a material such as Co, Pt, Fe, Ni, CoFe, NiFe, CoFeB, CoFeBW, alloys thereof, the like, or combinations thereof. For example, the ferromagnetic layers **132** and **134** each are a multilayer structure made of (Co/Pt)n, (Co/Ni)n or the like where n is the number of laminates (e.g., n ranges from about 1-10), and a total thickness of the multilayer structure is in a range from about 0.1 nm to about 50 nm. In some embodiments, the non-magnetic spacer layer **133** may be formed of material such as Ru, Ir, W, Ta, Mg, the like, or combinations thereof, and include a thickness in a range from about 0.1 nm to about 5 nm. In some embodiments, a thicker SAF layer **126** may have stronger antiferromagnetic properties, or may be more robust against external magnetic fields or thermal fluctuation.

[0037] The MTJ cell **102** further includes a metal spacer layer **127** formed over the pinned layer **126**. In some embodiments, the metal spacer layer **127** may be formed of material such as Ta, W, Mo, the like, or combinations thereof, and include a thickness in a range from about 0.1 nm to about 1 nm. The MTJ cell **102** includes a reference layer **128** formed over the metal spacer layer **127**. The reference layer **128** may be formed of a ferromagnetic material, such as one or more layers of CoFe, NiFe, CoFeB, CoFeBW, alloys thereof, the like, or combinations thereof. The reference layer **128** has a thickness in a range from about 0.1 nm to about 5 nm. The ferromagnetic reference layer **128** has a magnetization direction that is "fixed," because the magnetization direction of the reference layer **128** is pinned by the pinned layer **126**.

[0038] The MTJ cell **102** includes a tunnel barrier layer **129** formed over the reference layer **128**. The tunnel barrier layer **129** is thin enough to allow quantum mechanical tunneling of current between the ferromagnetic reference layer **128** and the ferromagnetic free layer **130**. In some embodiments, the tunnel barrier layer **129** can comprise crystalline barrier, such as manganese oxide (MgO) or spinel ($MgAl_2O_4$ a.k.a. MAO); or an amorphous barrier, such as aluminum oxide (AlO_x) or titanium oxide (TiO_x). In some embodiments, the tunnel barrier layer **129** has a thickness in a range from about 0.1 nm to about 10 nm.

[0039] The MTJ cell **102** includes a free layer **130** having a magnetization direction which is free to be switched by a spin transfer process when MTJ cell **102** receives a current higher than or equal to a critical current that is sufficient to switch the magnetization direction of the free layer **130**. Therefore, the free layer **130** is capable of changing its magnetization direction between one of two magnetization states, which cause two different MTJ resistances that correspond to the binary output of the AND gate logic or the OR gate logic. In some embodiments, the free layer **130** can comprise a magnetic metal, such as iron, nickel, cobalt and alloys thereof, for example. For instance, in some embodiments, the free layer **130** can comprise cobalt, iron, and boron, such as a CoFeB ferromagnetic free layer. In some embodiments, the free layer **130** is a multilayer structure including a stack of a CoFeB layer, a metal spacer layer, and another CoFeB layer. The MTJ cell **102** further includes a capping layer **131** formed over the free layer **130**. In some embodiments, the capping layer **131** includes Ta, Ru, MgO, the like, or combinations thereof.

[0040] FIGS. **3**A and **3**B show an operation of the MTJ cell **102**. As shown in FIGS. **3**A and **3**B, the MTJ cell **102** includes a reference layer **11** having a fixed magnetization direction, a tunnel barrier layer **12** and a free magnetic layer **13** having a variable magnetization direction. The reference layer **11** corresponds to the reference layer **128** or a combination of the pinned layer **126**, the metal spacer layer **127** and the reference layer **128** of FIG. **2**A. The tunnel barrier

layer **12** corresponds to the tunnel barrier layer **129** of FIG. **2**A and the free layer **13** corresponds to the free layer **130** of FIG. **2**A.

[0041] In FIG. **3**A, the reference layer **11** and the free layer **13** are magnetically oriented in a same direction, which means the magnetization directions of the reference layer **11** and free layer **13** are parallel. In FIG. **3**B, the reference layer **11** and the free layer **13** are magnetically oriented in opposite directions, which means the magnetization directions of the reference layer **11** and free layer **13** are anti-parallel. In FIGS. **3**A and **3**B, the magnetization directions are horizontal (parallel to the surfaces of the MTJ layers) and the magnetization direction of the free magnetic layer **13** changes between the left-to-right direction (as shown in FIG. **3**A) and the right-to-left direction (as shown in FIG. **3**B). That is, directions of easy magnetization axes of the reference layer **11** and the free layer **13** are in-plane. In other embodiments, as illustrated in FIGS. **3**C and **3**D, the magnetization directions are perpendicular to the surfaces of the MTJ layers, and the magnetization direction of the free layer **13** changes between the upward direction (as shown in FIG. **3**C) and the downward direction (as shown in FIG. **3**D).

[0042] When a current passes in a perpendicular direction through a plane of the reference layer **11** and the free layer **13**. The reference layer **11** polarizes the spin of the electrons that are transmitted through the layer, and this flow of incoming spins transfers the transverse part of the spin angular momentum to the local magnetization of the free layer **13**. When the current is sufficiently large, it pumps a precessional motion of the free layer **13** magnetization, which can be switched to either parallel (as shown in FIG. **3**A or **3**C) or antiparallel (as shown in FIG. **3**B or **3**D) to the reference layer **11** magnetization, depending on the magnitude and polarity of the current. The resistance of a same-oriented MTJ cell shown in FIG. **3**A or **3**C is less than the resistance of an opposite-oriented MTJ cell shown in FIG. **3**B or **3**D, and thus the MTJ cell have a low resistance state R_P corresponding to a first data state (e.g., logical "0"), and a high-resistance state R_{AP} corresponding to a second data state (e.g., logical "1"). Such binary logic data ("0" and "1") can serve as output of an AND gate or an OR gate and be stored in the MTJ cell. Further, since the stored data does not require a storage energy source, the logic operation result is non-volatile.

[0043] FIGS. **4**A-**4**D illustrate AND gate logic operations performed using an 1T-1MTJ MRAM cell in accordance with some embodiments of the present disclosure. In some embodiments, an initial state of the magnetization directions of the pinned layer **11** and the free layer **13** are parallel. A false state for a word line input voltage V_{WL1}, V_{WL2} is 0 Volt(V) and a true state for a word line input voltage V_{WL1}, V_{WL2} is V_{DD} (e.g., about 0.3V-5V) higher than 0V. A false state for the MTJ output resistance R_{MTJ} is a first binary value of "0" or a low resistance R_P, and a true state for the MTJ output resistance R_{MTJ} is a second binary value of "1" or a high resistance R_{AP}. In other embodiments, true and false states as described above may be reversed from one another without departing from the scope of the present disclosure. The logic operations in FIGS. **4**A-**4**D are performed when applying 0V to the bit line and V_{DD} to the source line.

[0044] In FIG. **4**A, when the first and second input voltages V_{WL1}, V_{WL2} applied to the first and second word lines WL**1** and WL**2** are 0V, the access transistor **104** is not turned on, and thus the magnetization direction of the free layer **13** is unchanged and thus not switched, so that the magnetization directions of the reference layer **11** and the free layer **13** remain parallel. In this case, the output resistance R_{MTJ} of the MTJ cell is a first binary level or a low resistance R_P. In other words, the input voltages V_{WL1}, V_{WL2} may each be a false state or a binary value of "0," and the output resistance R_{MTJ} may be a false state or a binary value of "0."

[0045] In FIG. **4**B, when the first input voltage V_{WL1} applied to the first word line WL**1** is V_{DD} greater than the threshold voltage of the access transistor **104**, and the second input voltage V_{WL2} applied to the second word line WL**2** is 0V, the magnetization direction of the free layer **13** may not be switched because the current flowing through the MTJ cell **102** may be less than the critical current required to switch the magnetization direction of the free layer **13**. In some embodiments, the critical current is in a range from about 1 μA to about 100 mA. Therefore, the magnetization directions of the reference layer **11** and the free layer **13** remain parallel. In this case, the output resistance R_{MTJ} of the MTJ cell is a first binary level or a low resistance R_P. In other words, the first input voltage V_{WL1} may be a true state or a binary value of "1," and the second input voltage V_{WL2} may be a false state or a binary value of "0," and the output resistance R_{MTJ} may be a false state or a binary value of "0."

[0046] In FIG. **4**C, when the first input voltage V_{WL1} applied to the first word line WL**1** is 0V, and the second input voltage V_{WL2} applied to the second word line WL**2** is V_{DD} greater than the threshold voltage of the access transistor **104**, the magnetization direction of the free layer **13** may not be switched because the current flowing through the MTJ cell **102** may be less than the critical current required to switch the magnetization direction of the free layer **13**. Therefore, the magnetization directions of the reference layer **11** and the free layer **13** remain parallel. In this case, the output resistance R_{MTJ} of the MTJ cell is a first binary level or a low resistance R_P. In other words, the first input voltage V_{WL1} may be a false state or a binary value of "0," and the second input voltage V_{WL2} may be a true state or a binary value of "1," and the output resistance R_{MTJ} may be a false state or a binary value of "0."

[0047] In FIG. **4**D, when the first and second input voltages V_{WL1}, V_{WL2} applied to the first and second word lines WL**1** and WL**2** are both V_{DD} greater than the threshold voltage of the access transistor **104**, the access transistor **104** is turned on and the magnetization direction of the free layer **13** is switched, because the current flowing through the MTJ cell **102** is greater than or equal to the critical current required to switch the magnetization direction of the free layer **13**. Therefore, the magnetization directions of the reference layer **11** and the free layer **13** become anti-parallel. In this case, the output resistance R_{MTJ} of the MTJ cell **102** is a second binary level or a high resistance R_{AP}. In other words, the input voltages V_{WL1}, V_{WL2} may each be a true state or a binary value of "1," and the output resistance R_{MTJ} may be a true state or a binary value of "1."

[0048] In the logic operations in FIGS. **4**A-**4**D as discussed above, the output resistance R_{MTJ} of the MTJ cell **102** follows an AND gate logic, as illustrated in the table in FIG. **5**. As illustrated in FIG. **5**, a false output (logic "0") results if either input is false. A true output (logic "1") results only if both input voltages to the word lines WL**1**, WL**2** are true inputs (logic "1"). The AND gate logic function effectively

finds the minimum between two binary digits, and thus the output is 0 except when the inputs are each 1.

[0049] FIGS. **6**A-**6**D illustrate OR gate logic operations performed using an 1T-1MTJ MRAM cell in accordance with some embodiments of the present disclosure. In some embodiments, an initial state of the magnetization directions of the pinned layer **11** and the free layer **13** are parallel. A false state for a word line input voltage V_{WL1}, V_{WL2} is 0 Volt(V) and a true state for a word line input voltage V_{WL1}, V_{WL2} is V_{DD} higher than 0V. A false state for the MTJ output resistance R_{MTJ} is a first binary value of "0" or a low resistance R_P, and a true state for the MTJ output resistance R_{MTJ} is a second binary value of "1" or a high resistance R_{AP}. In other embodiments, true and false states as described above may be reversed from one another without departing from the scope of the present disclosure. The logic operations in FIGS. **6**A-**6**D are performed when applying 0V to the bit line and V_{DD} to the source line.

[0050] In FIG. **6**A, when the first and second input voltages V_{WL1}, V_{WL2} applied to the first and second word lines WL**1** and WL**2** are 0V, the access transistor **104** is not turned on, and thus the magnetization direction of the free layer **13** is not switched, so that the magnetization directions of the reference layer **11** and the free layer **13** remain parallel. In this case, the output resistance R_{MTJ} of the MTJ cell is a first binary level or a low resistance R_P. In other words, the input voltages V_{WL1}, V_{WL2} may each be a false state or a binary value of "0," and the output resistance R_{MTJ} may be a false state or a binary value of "0."

[0051] In FIG. **6**B, when the first input voltage V_{WL1} applied to the first word line WL**1** is V_{DD} greater than the threshold voltage of the access transistor **104**, and the second input voltage V_{WL2} applied to the second word line WL**2** is 0V, the magnetization direction of the free layer **13** may be switched because the current flowing through the MTJ cell **102** may be greater than or equal to the critical current required to switch the magnetization direction of the free layer **13**. Therefore, the magnetization directions of the reference layer **11** and the free layer **13** become anti-parallel. In this case, the output resistance R_{MTJ} of the MTJ cell is a second binary level or a high resistance R_{AP}. In other words, the first input voltage V_{WL1} may be a true state or a binary value of "1," and the second input voltage V_{WL2} may be a false state or a binary value of "0," and the output resistance R_{MTJ} may be a true state or a binary value of "1." In some embodiments, the critical current is in a range from about 1 μA to about 100 mA.

[0052] In FIG. **6**C, when the first input voltage V_{WL1} applied to the first word line WL**1** is 0V, and the second input voltage V_{WL2} applied to the second word line WL**2** is V_{DD} greater than the threshold voltage of the access transistor **104**, the magnetization direction of the free layer **13** may be switched because the current flowing through the MTJ cell **102** may be greater than or equal to the critical current required to switch the magnetization direction of the free layer **13**. Therefore, the magnetization directions of the reference layer **11** and the free layer **13** become anti-parallel. In this case, the output resistance R_{MTJ} of the MTJ cell is a second binary level or a high resistance R_{AP}. In other words, the first input voltage V_{WL1} may be a false state or a binary value of "0," and the second input voltage V_{WL2} may be a true state or a binary value of "1," and the output resistance R_{MTJ} may be a true state or a binary value of "1."

[0053] In FIG. **6**D, when the first and second input voltages V_{WL1}, V_{WL2} applied to the first and second word lines WL**1** and WL**2** are both V_{DD} greater than the threshold voltage of the access transistor **104**, the access transistor **104** is turned on and the magnetization direction of the free layer **13** is switched, because the current flowing through the MTJ cell **102** is greater than the critical current required to switch the magnetization direction of the free layer **13**. Therefore, the magnetization directions of the reference layer **11** and the free layer **13** become anti-parallel. In this case, the output resistance R_{MTJ} of the MTJ cell **102** is a second binary level or a high resistance R_{AP}. In other words, the input voltages V_{WL1}, V_{WL2} may each be a true state or a binary value of "1," and the output resistance R_{MTJ} may be a true state or a binary value of "1."

[0054] In the logic operations in FIGS. **6**A-**6**D as discussed above, the output resistance R_{MTJ} of the MTJ cell **102** follows an OR gate logic, as illustrated in the table in FIG. **7**. As illustrated in FIG. **7**, a true output (logic "1") results if either input is true. A false output (logic "0") results only if both input voltages to the word lines WL**1**, WL**2** are false inputs (logic "0"). The OR gate logic function effectively finds the maximum between two binary digits, and thus the output is 1 except when the inputs are each 0.

[0055] When the MTJ cell has a small critical current, it is more likely that the magnetization direction of the free layer and hence the resistance state of the MTJ cell will be switched. Conversely, if the MTJ cell has a large critical current, then it is less likely that the magnetization direction of the free layer and hence the resistance state of the MTJ cell will be switched. Because OR gate logic function requires the magnetization direction of the free layer to be switched as long as one word line voltage is V_{DD}, and AND gate logic function requires the magnetization direction of the free layer to be switched when both word line voltages are V_{DD}, an MTJ cell suitable for performing OR gate logic operations may have a smaller critical current than an MTJ cell suitable for performing AND gate logic operations.

[0056] FIGS. **8**A and **8**B illustrate a refresh or initial operation of an MTJ cell in accordance with some embodiments of the present disclosure. Before each logic operation (e.g., each of the logic operations illustrated in FIGS. **4**A-**4**D and FIGS. **6**A-**6**D), the refresh operation is performed by applying V_{DD} to the bit line, the first and second word lines, and applying 0V to the source line. FIG. **8**A illustrates a refresh current $I_{refresh}$ applied to the MTJ cell **102** when the magnetization directions of the reference layer **11** and the free layer **13** are parallel. During the refresh operation, the first and second word lines supplied with V_{DD} turn on the access transistor, and the bit line voltage and the source line voltage thus form a potential difference that causes a refresh current $I_{refresh}$ to flow through the MTJ cell **102**. In this case as shown in FIG. **8**A, the refresh current is a reverse electron flow from the free layer **13** and causes the magnetization directions of the reference layer **11** and the free layer **13** to remain parallel.

[0057] FIG. **8**B illustrates a refresh current $I_{refresh}$, applied to the MTJ cell **102** when the magnetization directions of the reference layer **11** and the free layer **13** are anti-parallel. During the refresh operation, the first and second word lines supplied with V_{DD} turn on the access transistor, and the bit line voltage and the source line voltage thus form a potential difference that causes a refresh current $I_{refresh}$, which is greater than the critical current, to flow through the MTJ cell

102. In this case as shown in FIG. **8**B, the refresh current is a reverse electron flow from the free layer **13**, and the refresh current switches the magnetization direction of the free layer **13** to refresh the magnetization directions of the reference layer **11** and free layer **13** to an initial state of parallel.

[0058] FIG. **9** illustrates a read operation of an MTJ cell in accordance with some embodiments of the present disclosure. The read operation is performed by applying V_{DD} to the first and second word lines, applying 0V to the bit line, and applying a read voltage V_{read} to the source line. The read voltage V_{read} is less than V_{DD} so as to prevent read disturbance. For example, if the read voltage V_{read} is equal to V_{DD}, the read current flowing through the MTJ cell **102** may be greater than or equal to the critical current required to switch the magnetization direction of the free layer **13**, which in turn may switch the magnetization direction of the free layer **13**, thereby leading to read disturbance that causes the date stored in the MTJ cell **102** to be lost. During the read operation, the first and second word lines WL**1** and WL**2** turn on the access transistor **104**, the source line and the bit line thus form a potential difference that causes a read current to pass through the MTJ cell **102**. The read current passing through the MTJ cell **102** has a binary value depending on the resistance state of the MTJ cell **102**, and thus the logic operation result as discussed above can be read out. In some embodiments, the read voltage V_{read} is in a range from about 0.05V to about 5V.

[0059] FIG. **10**A is a plan view of an integrated circuit (IC) structure zoomed-in to an MRAM access transistor **104** having independent gates coupled to different word lines, in accordance with some embodiments of the present disclosure. FIG. **10**B is a cross-sectional view of the IC structure obtained from a first cut (e.g., cut X-X in FIG. **10**A), which is along a direction of current flow between source/drain regions of the MRAM access transistor **104**. FIG. **10**C is a cross-sectional view of the IC structure zoomed-in to the MRAM access transistor **104**, wherein the cross-sectional view is obtained from a second cut (e.g., cut Y-Y in FIG. **10**A), which is along a direction perpendicular to the direction of current flow between source/drain regions of the MRAM access transistor **104**.

[0060] In some embodiments, the MRAM access transistor **104** is a gate-all-around (GAA) transistor that comprises channel layers **204**A-C over a fin **202** on a substrate **200** (e.g., a semiconductor substrate), wherein the channel layers **204**A-C (collectively referred to as channel layers **204**) act as channel regions for the MRAM access transistor **104**. In some embodiments, the channel layers **204**A-C are nanosheets, nanowires, nanorings, nanoslabs, or other structures having nano-scale size (e.g., a few nanometers). The channel layers **204** may include p-type channel layers, n-type channel layers, or a combination thereof. In some embodiments, the geometry of each channel layer **204** can be square, rectangular, diamond, or the like.

[0061] Isolation regions **206** are disposed between adjacent fins **202**, which may protrude above and from between neighboring isolation regions **206**. Although the isolation regions **206** are described/illustrated as being separate from the substrate **200**, as used herein, the term "substrate" may refer to the semiconductor substrate alone or a combination of the semiconductor substrate and the isolation regions. Additionally, although a bottom portion of the fin **202** are illustrated as being single, continuous materials with the substrate **200**, the bottom portion of the fin **202** and/or the substrate **200** may comprise a single material or a plurality of materials. In this context, the fin **202** refers to the portion extending between the neighboring isolation regions **206**.

[0062] The MRAM access transistor **104** includes epitaxial source and drain (collectively referred to as source/drain or S/D in the present disclosure) regions **208** disposed on the fin **202** and on opposite ends of the channel layers **204**. The MRAM access transistor **104** further includes a first gate structure **210** and a second gate structure **212** laterally between the epitaxial source/drain regions **208**. In FIG. **10**C, the first gate structure **210** extends to between the channel layers **204**B and **204**C, and also extends along a bottom surface of the channel layer **204**A. The second gate structure **212** extends to between the channel layers **204**A and **204**B, and also extends along a top surface of the channel layer **204**C. As a result, the first gate structure **210** controls a lower channel region of the channel layer **204**A, an upper channel region of the channel layer **204**B, and a lower channel region of the channel layer **204**C; and the second gate structure **212** controls an upper channel region of the channel layer **204**A, a lower channel region of the channel layer **204**B, and an upper channel region of the channel layer **204**C.

[0063] The first gate structure **210** includes an interfacial layer **214**, a high-k dielectric layer **216** over the interfacial layer **214**, a work function metal layer **218** over the high-k dielectric layer **216**, and a gate fill metal **220** over the work function metal layer **218**. The second gate structure **212** also includes an interfacial layer **222**, a high-k dielectric layer **224** over the interfacial layer **222**, a work function metal layer **226** over the high-k dielectric layer **224**, and a gate fill metal **228** over the work function metal layer **226**. The first and second gate structures **210** and **212** are electrically isolated by the interfacial layers **214**, **222**, and the high-k dielectric layers **216**, **224**, and thus the first and second gate structures **210** and **212** can serve as two independent gate terminals G**1** and G**2** that are independently controlled by different word lines WL**1** and WL**2**.

[0064] Gate spacers **230** are disposed around sidewalls of the first and second gate structure **210** and **212** from a top view as illustrated in FIG. **10**A. Inner spacers **232** are disposed vertically between adjacent two of the channel layers **204** and the fin **202**, as illustrated in the cross-sectional view in FIG. **10**B. The gate spacers **230** and inner spacers **232** may serve to electrically isolate the first, second gate structures **210**, **212** from the epitaxial source/drain regions **208**.

[0065] Source/drain contacts **234** are disposed on the epitaxially source/drain regions **208**, respectively. Source/drain vias **236** are respectively disposed on the source/drain contacts **234**. First and second gate contact **238** and **240** are disposed on the first and second gate structures **210** and **212**, respectively. The first and second gate contacts **238** and **240**, the source/drain contacts **234** and the source/drain vias **236** can be referred to as middle-end-of-line (MEOL) conductive features that electrically connect front-end-of-line (FEOL) conductive features (e.g., first and second gate structures **210** and **212**, and source/drain regions **208** of the MRAM access transistor **104**) to back-end-of-line (BEOL) features (e.g., first and second word lines WL**1**, WL**2**, the source line SL, and the MTJ cell **102**), which in turn allows the MRAM access transistor **104** being electrically coupled to the MTJ cell **102** to perform AND/OR logic operations as discussed previously.

[0066] First and second interlayer dielectric (ILD) layers **242** and **244** are arranged over the substrate **200**. The first ILD layer **242** laterally surrounds the MRAM access transistor **104** and the source/drain contacts **234**. The second ILD layer **244** is disposed over the first ILD layer **242** and laterally surrounds the gate contacts **238**, **240** and the source/drain vias **236**.

[0067] A multilevel interconnect structure **246** is formed over the second ILD layer **244**. The multilevel interconnect structure **246** electrically interconnects one or more active and/or passive devices to form functional electrical circuits within the IC structure. The multilevel interconnect structure **246** comprises a plurality of inter-metal dielectric (IMD) layers **248**. The multilevel interconnect structure **246** further comprises one or more horizontal interconnects such as metal lines **250**, and/or one or more vertical interconnects such as metal vias **252**. The metal lines **250** have longest dimensions extending laterally, and the metal vias **252** have longest dimensions extending vertically, and thus the metal vias **252** conduct currents vertically and are used to electrically connect two metal lines **250** located at vertically adjacent levels, whereas the metal lines **250** conduct currents laterally and are used to distribute electrical signals and power within one level.

[0068] A metal line **250** in the multilevel interconnect structure **246** serves as the source line SL coupled to the source region **208** of the MRAM access transistor **104**, and two metal lines **250** in the multilevel interconnect structure **246** respectively serve as the first and second word lines WL**1** and WL**2** that are respectively coupled to the first and second gate structures **210** and **212** of the MRAM access transistor **104**. In some embodiments, the source line SL and the first and second word lines WL**1** and WL**2** are within a same interconnect level, such as in a bottommost IMD layer **248** that is immediately above the gate contacts **238**, **240** and the source/drain vias **236**. Therefore, the first gate contact **238** electrically connects the first word line WL**1** to the first gate structure **210**, the second gate contact **240** electrically connects the second word line WL**2** to the second gate structure **212**, and the source via **236** electrically connects the source line SL to the source contact **234** that is formed on the epitaxial source region **208**. When the MRAM access transistor **104** is turned on by applying suitable voltage to one or both of the word lines WL**1** and WL**2**, the source line SL is electrically coupled to the bottom end of the MTJ cell **102** through the turned-on transistor **104**.

[0069] In some embodiments, a dielectric layer **254** is disposed on the multilevel interconnect structure **246**, and a bottom electrode via (BEVA) **256** extends through the dielectric layer **254** to make electrical connection to the multilevel interconnect structure **246**. In some embodiments, another dielectric layer **258** is disposed over the dielectric layer **254**. An MTJ cell **102** is disposed in the dielectric layer **258** and makes electrical connection to the BEVA **256**. In the depicted embodiments, the MTJ cell **102** is disposed on the BEVA and thus formed in an "on-via" arrangement. In some other embodiments, the MTJ cell **102** is disposed on a metal line **250** and thus is formed in an "on-metal-line" arrangement. In some embodiments, the geometry of MTJ cell **102** can be circular, elliptical, rectangular, square, or the like. In some embodiments, the junction size of the MTJ cell **102** is in a range from about 1 nm to about 1 mm.

[0070] In some embodiments, a metal hard mask **260** is disposed in the dielectric layer **258** and covers a top surface of the MTJ cell **102**. In some embodiments, a passivation layer **262** extends along sidewalls of the MTJ cell **102** and sidewalls of the metal hard mask **260**. The passivation layer **262** further extends along a top surface of the dielectric layer **254**. In some embodiments, another dielectric layer **264** is disposed over the dielectric layer **258**, and a metal line **266** extends in the dielectric layer **264** to make electrical connection to the MTJ cell **102** via the metal hard mask **260**. The metal line **266** thus serves as a bit line BL electrically coupled to the top end of the MTJ cell. In some embodiments, another dielectric layer **268** is disposed over the dielectric layer **264**, and a magnetic field induced layer **270** is disposed within the dielectric layer **268** directly above the bit line **266**, but spaced apart from the bit line **266**.

[0071] FIGS. **11**A-**29** are top views and cross-sectional views of intermediate stages in the manufacturing of an IC structure having 1T-1MTJ MRAM cells with logic functions, in accordance with some embodiments of the present disclosure. The manufacturing process steps can be used to fabricate the IC structure as illustrated in FIGS. **10**A-**10**C. It is understood that additional operations can be provided before, during, and after processes shown by FIGS. **11**A-**29**, and some of the operations described below can be replaced or eliminated, for additional embodiments of the method. The order of the operations/processes may be interchangeable.

[0072] FIG. **11**A is a top view of an intermediate stage in manufacturing of an IC structure, and FIG. **11**B is a cross-sectional view obtained from cut X-X in FIG. **11**A. In FIGS. **11**A and **11**B, a semiconductor substrate **200** is illustrated. In some embodiments, the substrate **200** may be a semiconductor substrate, such as a bulk semiconductor substrate, a semiconductor-on-insulator (SOI) substrate, a multi-layered or gradient substrate, or the like. The substrate **200** may include a semiconductor material, such as an elemental semiconductor including Si and Ge; a compound or alloy semiconductor including SiC, SiGe, GeSn, GaAs, GaP, GaAsP, AlInAs, AlGaAs, GaInAs, InAs, GaInP, InP, InSb, GaInAsP; a combination thereof, or the like. The substrate **200** may be doped or substantially un-doped. In a specific example, the substrate **200** is a bulk silicon substrate, which may be a wafer.

[0073] The substrate **200** may include in its surface region, one or more buffer layers (not shown). The buffer layers can serve to gradually change the lattice constant from that of the substrate to that of the source/drain regions. The buffer layers may be formed from epitaxially grown single crystalline semiconductor materials such as, but not limited to Si, Ge, GeSn, SiGe, GaAs, InSb, GaP, GaSb, InAlAs, InGaAs, GaSbP, GaAsSb, GaN, GaP, and InP.

[0074] Impurity ions (interchangeably referred to as dopants) are implanted into the substrate **200** to form a well region (not shown). The ion implantation is performed to prevent a punch-through effect. The substrate **200** may include various regions that have been suitably doped with impurities (e.g., p-type or n-type conductivity). The dopants are, for example, boron (BF_2) for an n-type FET and phosphorus for a p-type FET.

[0075] FIGS. **11**A and **11**B also illustrate a layer stack formed over the substrate **200**. A first semiconductor layer (first sacrificial layer denoted as "SL1") **302**A is formed over the substrate **200**. A second semiconductor layer (channel

layer denoted as "channel") **204**A is formed over the first semiconductor layer **302**A. A third semiconductor layer (second sacrificial layer denoted as "SL2") **304**A is formed over the second semiconductor layer **204**A. Another second semiconductor layer (channel layer) **204**B is formed over the third semiconductor layer **304**A. Another first semiconductor layer (first sacrificial layer) **302**B is formed over the second semiconductor layer (channel layer) **204**B. Another second semiconductor layer (channel layer) **204**C is formed over the first semiconductor layer (first sacrificial layer) **302**B. Another third semiconductor layer (second sacrificial layer) **304**B is formed over the second semiconductor layer **204**C.

[0076] In some embodiments, the first, second and third semiconductor layers are alternately stacked such that there are more than two layers each of the first, second and third semiconductor layers. In some embodiments, the number of second semiconductor layers is from 1 to 20. In some embodiments, the first and third semiconductor layers will be removed in subsequent processing and thus are referred to as sacrificial layers, and the second semiconductor layers will become nanosheets, nanowires, nanoslabs or nanorings and remain in a final IC product to serve as transistor channel regions. In some embodiments, the lattice constant of the second semiconductor layers is greater than the lattice constant of the first and third semiconductor layers. In other embodiments, the lattice constant of the second semiconductor layers is smaller than the lattice constant of the first and third semiconductor layers.

[0077] In some embodiments, the first, second, and third semiconductor layers are made of different materials selected from the group consisting of Si, Ge, SiGe, GeSn, Si/SiGe/Ge/GeSn, SiGeSn, and combinations thereof. In some embodiments, the first, second, and third semiconductor layers are formed by epitaxy. In some embodiments, the SiGe is $Si_{1-x}Ge_x$, where $0<x<1$.

[0078] In some embodiments, the first semiconductor layers **302**A and **302**B (collectively referred to as first semiconductor layers **302**) are formed of a first semiconductor material. In some embodiments, the first semiconductor material includes a first Group IV element and a second Group IV element. The Group IV elements are selected from the group consisting of C, Si, Ge, Sn, and Pb. In some embodiments, the first Group IV element is Si and the second Group IV element is Ge. In certain embodiments, the first semiconductor material is $Si_{1-x}Ge_x$, wherein $0<x<1$. For example, x may be 0.85, and thus the first semiconductor material is $Si_{0.15}Ge_{0.85}$.

[0079] In some embodiments, the second semiconductor layers **204**A-**204**C (collectively referred to as second semiconductor layers **304**) are formed of a second semiconductor material. In some embodiments, the second semiconductor material is silicon. Stated another way, the second semiconductor material is pure silicon free of germanium in some embodiments. In some embodiments, the second semiconductor material includes a first Group IV element and a second Group IV element. In some embodiments, the first Group IV element is Si and the second Group IV element is Ge. In some embodiments, the atomic ratio of the first Group IV element to second Group IV element in the second semiconductor material is different than that in the first semiconductor material. For example, Ge atomic percentage in the first semiconductor material may be greater than the Ge atomic percentage in the second semiconductor material. In some other embodiments, the second semiconductor material includes a Group III element and a Group V element.

[0080] In some embodiments, the third semiconductor layers **304**A and **304**B (collectively referred to as third semiconductor layers **304**) are formed of a third semiconductor material. In some embodiments, the third semiconductor material includes a first Group IV element and a second Group IV element. The Group IV elements are selected from the group consisting of C, Si, Ge, Sn, and Pb. In some embodiments, the first Group IV element is Si and the second Group IV element is Ge. In some embodiments, the atomic ratio of the first Group IV element to second Group IV element in the third semiconductor material is different than that in the first semiconductor material. For example, Ge atomic percentage in the first semiconductor material may be greater than the Ge atomic percentage in the third semiconductor material. In certain embodiments, if the first semiconductor material is $Si_{1-x}Ge_x$, then the third semiconductor material is Si_xGe_{1-X}, wherein $0<x<1$. For example, x may be 0.85, and thus the first semiconductor material is $Si_{0.15}Ge_{0.85}$, and the third semiconductor material is $Si_{0.15}Ge_{0.85}$.

[0081] The first semiconductor layers **302**, the second semiconductor layers **204**, and the third semiconductor layers **304** may be formed by one or more epitaxy or epitaxial (epi) processes. The epitaxy processes include CVD deposition techniques (e.g., vapor-phase epitaxy (VPE) and/or ultra-high vacuum CVD (UHV-CVD)), molecular beam epitaxy (MBE), and/or other suitable processes. Thickness of the first and third semiconductor layers **302**, **304** depends on a target distance between the channel layers **204** and a target distance between the bottommost channel layer **204**A and the isolation region **206**. For example, the thickness of first and third semiconductor layers **302**, **304** is in a range from about 5 nm to about 50 nm. Thickness of the second semiconductor layers **204** depends on a target thickness of transistor channels. For example, the thickness of second semiconductor layers **204** is in a range from about 5 nm to about 50 nm.

[0082] After the epitaxial growth process of the layer stack is complete, a patterning process is performed on the layer stack to form a fin structure FS, as illustrated in FIGS. **11**A and **11**B. In some embodiments, the patterning process comprises a photolithography process for forming a patterned mask, followed by one or more etching processes using the patterned mask as an etch mask. The one or more etching processes may include wet etching processes, anisotropic dry etching processes, or combinations thereof, and may use one or more etchants that etch the first, second, and third semiconductor layers **302**, **204**, **304** at a faster etch rate than it etches the patterned mask. Although the fin structure FS illustrated in FIG. **11**B has vertical sidewalls, the etching process may lead to tapered sidewalls in some other embodiments.

[0083] Once the fin structure FS has been formed, shallow trench isolation (STI) regions **206** (interchangeably referred to as isolation insulation layer) are formed around a lower portion of the fin structure FS are illustrated in FIGS. **11**A and **11**B. STI regions **206** may be formed by depositing one or more dielectric materials (e.g., silicon oxide) to completely fill the trenches around the fin structures FS and then recessing the top surface of the dielectric materials. The dielectric materials of the STI regions **206** may be deposited

using a high density plasma chemical vapor deposition (HDP-CVD), a low-pressure CVD (LPCVD), sub-atmospheric CVD (SACVD), a flowable CVD (FCVD), spin-on coating, and/or the like, or a combination thereof. After the deposition, an anneal process or a curing process may be performed. In some cases, the STI regions **206** may include a liner such as, for example, a thermal oxide liner grown by oxidizing the silicon surface or silicon germanium surface of the fin structure FS and the substrate **200**. The recess process may use, for example, a planarization process (e.g., a chemical mechanical polish (CMP)) followed by a selective etch process (e.g., a wet etch, or dry etch, or a combination thereof) that may recess the top surface of the dielectric materials in the STI regions **206** such that an upper portion of the fin structure FS protrudes from surrounding insulating STI regions **206**.

[0084] FIG. **12**A is a top view of an intermediate stage in manufacturing of an IC structure, and FIG. **12**B is a cross-sectional view obtained from cut X-X in FIG. **12**A. In FIGS. **12**A and **12**B, a sacrificial dielectric layer **306** is blanket deposited over the substrate **200**, and then a dummy gate structure **308** is formed across the fin structure FS. The dummy gate structure **308** has a longitudinal axis perpendicular to the longitudinal axis of the fin structure FS. The sacrificial dielectric layer **306** may be, for example, silicon oxide, silicon nitride, a combination thereof, or the like, and may be deposited or thermally grown according to acceptable techniques. The dummy gate structure **308** may be a conductive or non-conductive material and may be selected from a group including amorphous silicon, polycrystalline-silicon (polysilicon), polycrystalline silicon-germanium (poly-SiGe), metallic nitrides, metallic silicides, metallic oxides, and metals. The dummy gate structure **308** is formed by, for example, depositing a layer of dummy gate material over the sacrificial dielectric layer **306**, followed by patterning the layer of dummy gate material into separate dummy gate structures **308** by using suitable photolithography and etching techniques.

[0085] FIG. **13**A is a top view of an intermediate stage in manufacturing of an IC structure, and FIG. **13**B is a cross-sectional view obtained from cut X-X in FIG. **13**A. In FIGS. **13**A and **13**B, exposed portions of the sacrificial dielectric layer **306** and underlying portions of the fin structure FS that extend laterally beyond the dummy gate structure **308** are removed, for example, in an anisotropic etch step until the substrate **200** is exposed. In some embodiments, the etching is performed using an etchant that attacks fin structure FS, and hardly attacks the dummy gate structure **308**. Stated differently, the dummy gate structure **308** has higher etch resistance to the etching process than that of the fin structure FS. Accordingly, in the etching step, the height of dummy gate structure **308** is substantially not reduced. After etching the fin structure FS is complete, a cleaning process is optionally performed on the exposed substrate **200** to remove any possible oxide formation on the silicon surface by using, for example, a diluted hydrofluoric acid (HF) solution.

[0086] Then, in FIGS. **13**A and **13**B, gate spacers **230** are formed on sidewalls of the dummy gate structure **308**. In some embodiments of the spacer formation step, a spacer material layer is deposited on the substrate **200**. The spacer material layer may be a conformal layer that is subsequently etched back to form gate sidewall spacers. In the illustrated embodiment, a spacer material layer is disposed conformally on top and sidewalls of the dummy gate structure **308**. The spacer material layer may include a dielectric material such as silicon oxide, silicon nitride, silicon carbide, silicon oxynitride, SiCN films, silicon oxycarbide, SiOCN films, and/or combinations thereof. The spacer material layer may be formed by depositing a dielectric material over the dummy gate structure **308** using processes such as, CVD process, a subatmospheric CVD (SACVD) process, a flowable CVD process, an ALD process, a PVD process, or other suitable process. An anisotropic etching process is then performed on the deposited spacer material layer to expose portions of the fin structure FS not covered by the dummy gate structure **308** (e.g., in source/drain regions of the fin structure FS). Portions of the spacer material layer directly above the dummy gate structure **308** may be completely removed by this anisotropic etching process. Portions of the spacer material layer on sidewalls of the dummy gate structure **308** may remain, forming gate sidewall spacers, which is denoted as the gate spacers **230**, for the sake of simplicity.

[0087] After the gate spacers **230** are formed, sidewalls of the layers of the fin structure FS formed of the first and third semiconductor materials (e.g., the first and second sacrificial layers **302** and **304**) are etched to form sidewall recesses **231** between corresponding channel layers **204**. Although sidewalls of the first and second sacrificial layers **302** and **304** in recesses **231** are illustrated as being straight in FIG. **13**B, the sidewalls may be concave or convex. The sidewalls may be etched using isotropic etching processes, such as wet etching or the like. In some embodiments in which the first and second sacrificial layers **302** and **304** include, e.g., SiGe, and the channel layers **204** include, e.g., Si, a dry etch process with tetramethylammonium hydroxide (TMAH), ammonium hydroxide (NH_4OH), or the like may be used to etch sidewalls of the first and second sacrificial layers **302** and **304**.

[0088] After the first and second sacrificial layers **302** and **304** are laterally recessed, inner spacers **232** are formed in the sidewall recess **231**. The inner spacers **232** act as isolation features between subsequently formed source/drain regions and gate structure. As will be discussed in greater detail below, source/drain regions will be formed on the exposed surface of the substrate **200**, and the first and second sacrificial layers **302** and **304** will be replaced with first and second gate structures **210** and **212** in following processing.

[0089] Inner spacers **232** are formed from an inner spacer layer that is deposited by a conformal deposition process, such as CVD, ALD, or the like. The inner spacer layer may comprise a material such as silicon nitride or silicon oxynitride, although any suitable material, such as low-dielectric constant (low-k) materials having a k-value less than about 3.5, may be utilized. The inner spacer layer may then be anisotropically etched to form the inner spacers **232**. Although outer sidewalls of the inner spacers **232** are illustrated as being flush with sidewalls of the channel layers **204**, the outer sidewalls of the inner spacers **232** may extend beyond or be recessed from sidewalls of the channel layers **204**. Moreover, although the outer sidewalls of the inner spacers **232** are illustrated as being straight in FIG. **13**B, the outer sidewalls of the inner spacers **232** may be concave or convex. The inner spacer layer may be etched by an anisotropic etching process, such as RIE, NBE, or the like. The inner spacers **232** may be used to prevent damage to subsequently formed source/drain regions (such as the epi-

taxial source/drain regions **208**, discussed below with respect to FIGS. **14**A-**14**B) caused by subsequent etching processes, such as etching processes used to form gate structures.

[0090] FIG. **14**A is a top view of an intermediate stage in manufacturing of an IC structure, FIG. **14**B is a cross-sectional view obtained from cut X-X in FIG. **14**A, and FIG. **14**C is a cross-sectional view obtained from cut Y-Y in FIG. **14**A. In FIGS. **14**A-**14**C, epitaxial source/drain regions **208** are formed on the exposed surface of the substrate **200** and at opposite sides of the channel layers **204**. In some embodiments, the source/drain regions **208** may exert stress on the channel layers **204**, thereby improving device performance. As illustrated in FIG. **14**B, the dummy gate structure **308** is disposed between respective neighboring pairs of the epitaxial source/drain regions **208**. In some embodiments, the gate spacers **230** are used to separate the epitaxial source/drain regions **208** from the dummy gate structures **308**, and the inner spacers **232** are used to separate the epitaxial source/drain regions **208** from the first and second sacrificial layers **302** and **304** by an appropriate lateral distance so that the epitaxial source/drain regions **208** do not short out with subsequently formed gates of the resultant MRAM access transistor.

[0091] In some embodiments, the epitaxial source/drain regions **208** may include any acceptable material appropriate for n-type FETs. For example, if the channel layers **204** are silicon, the epitaxial source/drain regions **208** may include materials exerting a tensile strain on the channel layers **204**, such as silicon carbide, phosphorous doped silicon carbide, silicon phosphide, or the like. In some embodiments, the epitaxial source/drain regions **208** may include any acceptable material appropriate for p-type FETs. For example, if the channel layers **204** are silicon, the epitaxial source/drain regions **208** may comprise materials exerting a compressive strain on the channel layers **204**, such as silicon germanium, boron doped silicon germanium, germanium, germanium tin, or the like. The epitaxial source/drain regions **208** may have surfaces raised from respective the upper surface of the upper channel layer **204**C and may have facets. In some embodiments, the epitaxial source/drain regions **208** include Si, Ge, Sn, $Si_{1-x}Ge_x$, $Si_{1-x-y}Ge_xSn_y$, or the like.

[0092] The epitaxial source/drain regions **208** may be implanted with dopants to form source/drain regions, followed by an anneal process. The source/drain regions may have an impurity concentration of between about 1×10^{17} atoms/cm^3 and about 1×10^{22} atoms/cm^3. The n-type and/or p-type impurities for source/drain regions may be any of the impurities previously discussed. In some embodiments, the epitaxial source/drain regions **208** may be in situ doped during growth.

[0093] FIG. **15**A is a top view of an intermediate stage in manufacturing of an IC structure, FIG. **15**B is a cross-sectional view obtained from cut X-X in FIG. **15**A, and FIG. **15**C is a cross-sectional view obtained from cut Y-Y in FIG. **15**A. In FIGS. **15**A-**15**C, the dummy gate structure **308** and the sacrificial dielectric layer **306** are removed in one or more etching steps, so that a gate trench GT**1** is formed and enclosed by the gate spacer **230**. In some embodiments, the dummy gate structure **308** and the sacrificial dielectric layer **306** are removed by an anisotropic dry etch process. For example, the etching process may include a dry etch process using reaction gas(es) that selectively etch the dummy gate structure **308** at a faster rate than etching the gate spacers **230**. Gate trench GT**1** exposes and/or overlies portions of channel layers **204**, which act as channel regions in subsequently completed transistor. The channel layers **204** which act as the channel regions are disposed between neighboring pairs of the epitaxial source/drain regions **208**. During the removal, the sacrificial dielectric layer **306** may be used as an etch stop layer when the dummy gate structure **308** is etched. The sacrificial dielectric layer **306** may then be removed after the removal of the dummy gate structure **308**.

[0094] FIG. **16**A is a top view of an intermediate stage in manufacturing of an IC structure, and FIG. **16**B is a cross-sectional view obtained from cut Y-Y in FIG. **16**A. In FIGS. **16**A and **16**B, a patterned hard mask **310** is formed over the substrate **200**. The patterned mask **310** has an opening **312** exposing a first side FS**1** of the fin structure FS, and a second side FS**2** of the fin structure FS is covered by the patterned mask **310**, as shown in the cross-sectional view of FIG. **16**B. In some embodiments, the patterned mask **310** includes silicon oxycarbide (SiOC), silicon nitride (Si_3N_4), silicon oxide, the like, or combinations thereof. The patterned mask **310** may be formed by, for example, depositing a layer of mask material (e.g., silicon nitride) over the substrate **200**, coating a photoresist layer over the layer of mask material, patterning the photoresist layer into a photoresist mask by using a photolithography process, and etching the layer of mask material to form the patterned mask **310** having the opening **312** by using the photoresist mask as an etch mask.

[0095] FIG. **17**A is a top view of an intermediate stage in manufacturing of an IC structure, and FIG. **17**B is a cross-sectional view obtained from cut Y-Y in FIG. **17**A. In FIGS. **17**A and **17**B, a selective etching process is performed to selectively etch the first sacrificial layers **302** exposed in the opening **312** of the patterned mask **310**. This etching step forms a space S**1** below the channel layer **204**A and a space S**2** between the channel layers **204**B and **204**C. In some embodiments, the etching step selectively etches the first sacrificial layers **302** at a faster etch rate than it etches the second sacrificial layers **304** and the channel layers **204**. Therefore, the second sacrificial layers **304** and the channel layers **204** may remain substantially intact after the selective etching step is complete.

[0096] FIG. **18**A is a top view of an intermediate stage in manufacturing of an IC structure, FIG. **18**B is a cross-sectional view obtained from cut Y-Y in FIG. **18**A, and FIG. **18**C is a zoomed-in top view of the first gate structure as shown in FIG. **18**A. In FIGS. **18**A-**18**C, a first gate structure **210** is formed at the first side FS**1** of the fin structure FS and extends into the space S**1** below the channel layer **204**A and the space S**2** between the channel layers **204**B and **204**C. In some embodiments, the first gate structure **210** is a high-k/metal gate (HKMG) structure and may be formed by, for example, depositing an interfacial layer **214** over the substrate **200**, a high-k dielectric layer **216** over the interfacial layer **214**, a work function metal layer **218** over the high-k dielectric layer **216**, and a gate fill metal **220** over the work function metal layer **218**, and then performing a CMP process on these deposited materials until the mask **310** is exposed.

[0097] In some embodiments, the interfacial layer **214** is silicon oxide and may be formed by, for example, chemical oxidation, thermal oxidation, atomic layer deposition (ALD), chemical vapor deposition (CVD), and/or other suitable method. In some embodiments, the high-k dielectric layer **216** has a high dielectric constant, for example, greater

than that of thermal silicon oxide (~3.9). The high-k dielectric layer **216** may include hafnium oxide (HfO_2). Alternatively, the high-k dielectric layer **216** may include other high-k dielectrics, such as hafnium silicon oxide (HfSiO), hafnium silicon oxynitride (HfSiON), hafnium tantalum oxide (HfTaO), hafnium titanium oxide (HfTiO), hafnium zirconium oxide (HfZrO), lanthanum oxide (LaO), zirconium oxide (ZrO), titanium oxide (TiO), tantalum oxide (Ta_2O_5), yttrium oxide (Y_2O_3), strontium titanium oxide ($SrTiO_3$, STO), barium titanium oxide ($BaTiO_3$, BTO), barium zirconium oxide (BaZrO), hafnium lanthanum oxide (HfLaO), lanthanum silicon oxide (LaSiO), aluminum silicon oxide (AlSiO), aluminum oxide (Al_2O_3), silicon nitride (Si_3N_4), oxynitrides (SiON), and combinations thereof.

[0098] In some embodiments, the work function metal layer **218** may include one or more work function metals to provide a suitable work function for the high-k/metal gate structure **210**. For an n-type FET, the work function metal layer **218** may include one or more n-type work function metals (N-metal), which has a work function lower than a mid-gap work function (about 4.5 eV) that is in the middle of the valance band and the conduction band of silicon. The n-type work function metals may exemplarily include, but are not limited to, titanium aluminide (TiAl), titanium aluminium nitride (TiAlN), carbo-nitride tantalum (TaCN), hafnium (Hf), zirconium (Zr), titanium (Ti), tantalum (Ta), aluminum (Al), metal carbides (e.g., hafnium carbide (HfC), zirconium carbide (ZrC), titanium carbide (TiC), aluminum carbide (AlC)), aluminides, and/or other suitable materials. On the other hand, for a p-type FET, the work function metal layer **218** may include one or more p-type work function metals (P-metal) having a work function higher than the mid-gap work function of silicon. The p-type work function metals may exemplarily include, but are not limited to, titanium nitride (TiN), tungsten nitride (WN), tungsten (W), ruthenium (Ru), palladium (Pd), platinum (Pt), cobalt (Co), nickel (Ni), conductive metal oxides, and/or other suitable materials.

[0099] In some embodiments, the gate fill metal **220** may exemplarily include, but are not limited to, tungsten, aluminum, copper, nickel, cobalt, titanium, tantalum, titanium nitride, tantalum nitride, nickel silicide, cobalt silicide, TaC, TaSiN, TaCN, TiAl, TiAlN, or other suitable materials. In some embodiments as illustrated in FIG. **18**B, the gate fill metal **220** does not extend into the space S**1** below the channel layer **204**A and the space S**2** between the channel layers **204**B and **204**C, because these small spaces S**1**, S**2** are already filled with the work function metal layer **218**. However, in some other embodiments, if the spaces S**1** and S**2** are large enough or the work function metal layer **218** is thin enough, then the gate fill metal **220** may extend into the spaces S**1** and S**2**.

[0100] FIG. **19**A is a top view of an intermediate stage in manufacturing of an IC structure, and FIG. **19**B is a cross-sectional view obtained from cut Y-Y in FIG. **19**A. In FIGS. **19**A and **19**B, the hard mask **310** is removed by using a selective etching process that etches the material of the hard mask **310** at a faster etch rate than etching other materials on the substrate **200**.

[0101] FIG. **20**A is a top view of an intermediate stage in manufacturing of an IC structure, and FIG. **20**B is a cross-sectional view obtained from cut Y-Y in FIG. **20**A. In FIGS. **20**A and **20**B, a first ILD layer **242** is deposited over the structure illustrated in FIGS. **19**A-**19**B. The first ILD layer **242** is formed of a dielectric material, and may be deposited by any suitable method, such as CVD, plasma-enhanced CVD (PECVD), or FCVD. Dielectric materials may include phospho-silicate glass (PSG), boro-silicate glass (BSG), boron-doped phospho-silicate glass (BPSG), undoped silicate glass (USG), or the like. Other insulation materials formed by any acceptable process may be used. Then, a planarization process, such as a CMP, may be performed to level the top surface of the first ILD layer **242** with the top surface of the first gate structure **210**. The first ILD layer **242** is then etched by using suitable photolithography and etching techniques to form an opening **243** exposing the second sacrificial layers **304**.

[0102] Next, a selective etching process is performed to selectively etch the second sacrificial layers **304** exposed in the opening **243** in the first ILD layer **242**. This etching step forms a space S**3** between the channel layers **204**A and **204**B and a space S**4** above the channel layer **204**C. In some embodiments, the etching step selectively etches the second sacrificial layers **304** at a faster etch rate than it etches the channel layers **204**. Therefore, the channel layers **204** may remain substantially intact after the selective etching step is complete.

[0103] FIG. **21**A is a top view of an intermediate stage in manufacturing of an IC structure, and FIG. **21**B is a cross-sectional view obtained from cut Y-Y in FIG. **21**A. In FIGS. **21**A-**21**B, a second gate structure **212** is formed in the opening in the first ILD layer **242** and extends into the space S**3** between the channel layers **204**A and **204**B and the space S**4** above the channel layer **204**C. In some embodiments, the second gate structure **212** is a high-k/metal gate (HKMG) structure and may be formed by, for example, depositing an interfacial layer **222** over the substrate **200**, a high-k dielectric layer **224** over the interfacial layer **222**, a work function metal layer **226** over the high-k dielectric layer **224**, and a gate fill metal **228** over the work function metal layer **226**, and then performing a CMP process on these deposited materials until the first ILD layer **242** is exposed.

[0104] In some embodiments, the interfacial layer **222** is silicon oxide and may be formed by, for example, chemical oxidation, thermal oxidation, atomic layer deposition (ALD), chemical vapor deposition (CVD), and/or other suitable method. The second gate structure **212** is electrically isolated from the first gate structure **210** at least by the interfacial layers **214** and **222**. In some embodiments where the interfacial layer **214** of the first gate structure **210** and the interfacial layer **222** of the second gate structure **212** are both silicon oxide, they may have no distinguishable interface therebetween. In some embodiments, the high-k dielectric layer **224** has a high dielectric constant, for example, greater than that of thermal silicon oxide (~3.9). Promising candidates of the material of the high-k dielectric layer **224** are similar to that of the high-k dielectric layer **216** of the first gate structure **210**, and thus they are not repeated for the sake of brevity. In some embodiments, the high-k dielectric layer **224** has a same high-k dielectric material as the high-k dielectric layer **216** of the first gate structure **210**. In some other embodiments, the high-k dielectric layer **224** has a different high-k dielectric material from the high-k dielectric layer **216** of the first gate structure **210**.

[0105] In some embodiments, the work function metal layer **226** may include one or more work function metals to provide a suitable work function for the high-k/metal gate structure **212**, and the gate fill metal **228** serves to fill a

remainder of the opening in the ILD layer **242**. Promising candidates of the materials of the work function metal layer **226** and the gate fill metal **228** are similar to that of the work function metal layer **218** and the gate fill metal **220** of the first gate structure **210**, and thus they are not repeated for the sake of brevity. In some embodiments, the work function metal layer **226** has same one or more work function metals as the work function metal layer **218** of the first gate structure **210**. In some other embodiments, the work function metal layer **226** has a different work function metal from the work function metal layer **218** of the first gate structure **210**. In some embodiments, the gate fill metal **228** has a same metal as the gate fill metal **220** of the first gate structure **210**. In some other embodiments, the gate fill metal **228** has a different metal from the gate fill metal **220** of the first gate structure **210**.

[0106] FIG. **22**A is a top view of an intermediate stage in manufacturing of an IC structure, and FIG. **22**B is a cross-sectional view obtained from cut X-X in FIG. **22**A. In FIGS. **22**A-**22**B, source/drain contacts **234** are formed in the first ILD layer **242** and over the epitaxial source/drain regions **208**. Formation of the source/drain contacts **234** includes, by way of example and not limitation, performing one or more etching processes to form contact openings extending through the first ILD layer **242** to expose the source/drain regions **208**, depositing one or more metal materials (e.g., titanium nitride, tungsten, cobalt, copper, the like or combinations thereof) overfilling the contact openings by using suitable deposition techniques (e.g., CVD, PVD, ALD, the like or combinations thereof), and then performing a CMP process to remove excessive metal materials outside the contact openings. The fabrication of the MRAM access transistor **104** and source/drain contacts **234** on source/drain regions of the transistor **104** is complete. Fabrication of the MRAM access transistor **104** can be called a front-end-of-line (FEOL) process.

[0107] In FIG. **23**, after the source/drain contacts **234** are formed, a second ILD layer **244** is deposited over the first ILD layer **242** by using suitable deposition techniques. Promising candidates of the material of the second ILD layer **244** are similar to that of the first ILD layer **242**, and thus they are not repeated for the sake of brevity. First and second gate contacts **238**, **240** (as illustrated in FIG. **10**) and source/drain vias **236** are formed in the second ILD layer **244** by etching openings in the second ILD layer **244**, depositing one or more metal materials in the openings, and performing a CMP process to remove excess materials outside the openings. Fabrication of the source/drain contacts **234**, gate contacts **238**, **240**, and source/drain vias **236** can be called a middle-end-of-line (MEOL) process.

[0108] A back-end-of-line (BEOL) process is then performed to form a multilevel interconnect structure **246** over the second ILD layer **244** and the MEOL conductive features. The multilevel interconnect structure **246** includes a plurality of inter-metal dielectric (IMD) layers **248** formed using suitable deposition techniques, one or more metal lines **250** and one or more metal vias **252** formed in the respective IMD layers **248**, by using any suitable method, such as a single damascene process, a dual damascene process, or the like. In some embodiments, the IMD layers **248** may include low-k dielectric materials having k values, for example, lower than about 4.0 or even 2.0 disposed between such conductive features. In some embodiments, the IMD layers may be made of, for example, phosphosilicate glass (PSG), borophosphosilicate glass (BPSG), fluorosilicate glass (FSG), SiOxCy, Spin-On-Glass, Spin-On-Polymers, silicon oxide, silicon oxynitride, combinations thereof, or the like, formed by any suitable method, such as spin-on coating, chemical vapor deposition (CVD), plasma-enhanced CVD (PECVD), or the like. The metal lines **250** and the metal vias **252** may comprise conductive materials such as copper, aluminum, tungsten, combinations thereof, or the like. In some embodiments, the metal lines **250** and the metal vias **252** may further comprise one or more barrier/adhesion layers (not shown) to protect the respective IMD layers **248** from metal diffusion (e.g., copper diffusion) and metallic poisoning. The one or more barrier/adhesion layers may comprise titanium, titanium nitride, tantalum, tantalum nitride, or the like, and may be formed using physical vapor deposition (PVD), CVD, ALD, or the like.

[0109] A dielectric layer **254** is deposited over the multilevel interconnect structure **246** by using suitable deposition techniques. In some embodiments, the dielectric layer **254** may include low-k dielectric materials as discussed previously with respect to the IMD layers **248**, and may have a thickness in a range from about 1 nm to about 1 μm. Next, a bottom electrode via (BEVA) **256** is formed in the dielectric layer **254** by etching an via opening in the dielectric layer **254**, depositing one or more metal materials in the openings, and performing a CMP process to remove excess materials outside the opening. An MTJ layer stack **257** is then deposited over the dielectric layer **254**. The MTJ layer stack **257** includes, as illustrated in FIGS. **2**A-**2**B, a bottom electrode layer **124**, a seed layer **125**, a pinned layer **126**, metal spacer layer **127**, a reference layer **128**, a tunnel barrier layer **129**, a free layer **130**, and a capping layer **131**. Details about these layers are discussed previously with respect to FIGS. **2**A and **2**B, and thus they are not repeated for the sake of brevity.

[0110] A metal hard mask layer **259** is deposited over the MTJ layer stack **257**. In some embodiments, the metal hard mask layer **259** includes Ta, TiN, other suitable metals, or combinations thereof. The metal hard mask layer **259** has a thickness in a range from about 10 nm to about 500 nm.

[0111] In some embodiments as illustrated in FIG. **24**, the metal hard mask layer **259** and the MTJ layer stack **257** are patterned to form a metal hard mask **260** and an MTJ cell **102** below the metal hard mask **260** by using suitable photolithography and etching techniques.

[0112] In some embodiments as illustrated in FIG. **25**, a passivation layer **262** is conformally deposited over the metal hard mask and the MTJ cell **102**, a dielectric layer **258** is deposited over the passivation layer **262**, and a CMP process is performed on the dielectric layer **258** and the passivation layer **262** until the metal hard mask **260** is exposed. In some embodiments, the passivation layer **262** includes silicon nitride or other suitable dielectric materials and has a thickness in a range from about 1 nm to about 50 nm. In some embodiments, the dielectric layer **258** includes a low-k dielectric material as discussed previously with respect to the IMD layers **248**.

[0113] In some embodiments as illustrated in FIG. **26**, another dielectric layer **264** is deposited over the dielectric layer **258** and the metal hard mask **260** by using suitable deposition techniques. The dielectric layer **264** includes a low-k dielectric material as discussed previously with respect to the IMD layers **248**. In some embodiments, a total thickness of the dielectric layers **264** and **258** is in a range

from about 10 nm to about 500 nm. Then, in FIG. **27**, a metal line **266** is formed in the dielectric layer **264** to serve as a bit line BL for the MTJ cell **102**. The metal line **266** can be formed by, for example, etching a trench in the dielectric layer **264** by using suitable photolithography and etching techniques, depositing one or more metal materials (e.g., copper) in the trench, and then performing a CMP process to remove excess metal materials outside the trench of the dielectric layer **264**.

[0114] In some embodiments as illustrated in FIG. **28**, another dielectric layer **268** is deposited over the dielectric layer **264** and the metal line **266** by using suitable deposition techniques. The dielectric layer **268** includes a low-k dielectric material as discussed previously with respect to the IMD layers **248**, and has a thickness in a range from about 10 nm to about 500 nm. Then, in FIG. **29**, a magnetic field induced layer **270** is formed in the dielectric layer **268** by, for example, etching a recess in the dielectric layer **268** by using suitable photolithography and etching techniques, depositing one or more metal materials in the recess, and then performing a CMP process to remove excess metal materials outside the recess of the dielectric layer **268**. In some embodiments, the magnetic field induced layer **270** includes cobalt or other suitable metals and has a thickness in a range from about 1 nm to about 100 nm. After forming the magnetic field induced layer **270**, the BEOL process continues to form one or more interconnect layers over the dielectric layer **268** to complete fabrication of the IC structure.

[0115] In the embodiments as illustrated in FIGS. **10**A-**29**, the IC structure uses a gate-all-around (GAA) transistor having two independent gates to serve as the MRAM access transistor. However, in some other embodiments, the MRAM access transistor can be a fin field-effect transistor (FinFET) having two independent gates, as illustrated in FIGS. **30**A-**30**E. FIG. **30**A is a plan view of an integrated circuit (IC) structure zoomed-in to a fin-type MRAM access transistor **404** having independent gates coupled to different word lines, in accordance with some embodiments of the present disclosure. FIG. **30**B is a cross-sectional view of the IC structure obtained from a first cut (e.g., cut Y-Y in FIG. **30**A), which is perpendicular to a longitudinal axis of the fin of the fin-type MRAM access transistor **404**. FIG. **30**C is a cross-sectional view of the IC structure obtained from a second cut (e.g., cut X**1**-X**1** in FIG. **30**A), which is along the longitudinal axis of the fin of the fin-type MRAM access transistor **404**. FIG. **30**D is a cross-sectional view of the IC structure obtained from a third cut (e.g., cut X**2**-X**2** in FIG. **30**A), which is along the longitudinal axis of the fin of the fin-type MRAM access transistor **404** but offset from the fin. FIG. **30**E is a cross-sectional view of the IC structure obtained from a fourth cut (e.g., cut X**3**-X**3** in FIG. **30**A), which is along the longitudinal axis of the fin of the fin-type MRAM access transistor **404** but offset from the fin.

[0116] In some embodiments, the fin-type MRAM access transistor **404** comprises a fin **502** on a substrate **500**, wherein the fin **502** acts as a semiconductor channel for the transistor **404**. Isolation regions **506** are disposed between adjacent fins **502**, which may protrude above and from between neighboring isolation regions **506**. Although a bottom portion of the fin **502** are illustrated as being single, continuous materials with the substrate **500**, the bottom portion of the fin **502** and/or the substrate **500** may comprise a single material or a plurality of materials. In this context, the fin **502** refers to the portion extending between the neighboring isolation regions **506**.

[0117] The MRAM access transistor **404** includes epitaxial source/drain regions **508** disposed on the fin **502** and on separate regions of the fin **502**. The MRAM access transistor **404** further includes a first gate structure **510** on a first side FS**3** of the fin **502** and a second gate structure **512** on a second side FS**4** of the fin **502**. As a result, the first gate structure **510** controls a first side channel region (e.g., left side channel region) of the fin **502**, and the second gate structure **512** controls a second side channel region (e.g., right side channel region) of the fin **502**.

[0118] The first gate structure **510** includes an interfacial layer **514**, a high-k dielectric layer **516** over the interfacial layer **514**, a work function metal layer **518** over the high-k dielectric layer **516**, and a gate fill metal **520** over the work function metal layer **518**. The second gate structure **512** also includes an interfacial layer **522**, a high-k dielectric layer **524** over the interfacial layer **522**, a work function metal layer **526** over the high-k dielectric layer **524**, and a gate fill metal **528** over the work function metal layer **526**. The first and second gate structures **510** and **512** are electrically isolated by a gate-cut dielectric structure **529**, and thus the first and second gate structures **510** and **512** can serve as two independent gate terminals G**1** and G**2** that are independently controlled by different word lines WL**1** and WL**2**.

[0119] Gate spacers **530** are disposed around sidewalls of the first and second gate structure **510** and **512** from a top view as illustrated in FIG. **30**A. The gate spacers **530** may serve to electrically isolate the first, second gate structures **510**, **512** from the epitaxial source/drain regions **508**.

[0120] Source/drain contacts **534** are disposed on the epitaxially source/drain regions **508**, respectively. An ILD layer **542** is formed around the source/drain contacts. Source/drain vias **536** are respectively disposed on the source/drain contacts **534**. First and second gate contact **538** and **540** are disposed on the first and second gate structures **510** and **512**, respectively. The first and second gate contacts **538** and **540**, the source/drain contacts **534** and the source/drain vias **536** can be referred to as middle-end-of-line (MEOL) conductive features that electrically connect front-end-of-line (FEOL) conductive features (e.g., first and second gate structures **510** and **512**, and source/drain regions **508** of the MRAM access transistor **404**) to back-end-of-line (BEOL) features (e.g., first and second word lines WL**1**, WL**2**, the source line SL, and the MTJ cell **102**), which in turn allows the MRAM access transistor **404** being electrically coupled to the MTJ cell **102** to perform AND/OR logic operations as discussed previously.

[0121] FIGS. **31**A-**38**B are cross-sectional views of intermediate stages in the manufacturing of an FinFET having two independent gates for implementing 1T-1MTJ cell with logic functions, in accordance with some embodiments of the present disclosure. The manufacturing process steps can be used to fabricate the IC structure as illustrated in FIGS. **30**A-**30**E. In FIGS. **31**A-**38**B, the "A" figures (e.g., FIGS. **31**A, **32**A, etc.) illustrate a cross-sectional view corresponding to the cut X**1**-X**1** in FIG. **30**A, and the "B" figures (e.g., FIGS. **31**B, **32**B, etc.) illustrate a cross-sectional view corresponding to the cut Y-Y in FIG. **30**A. It is understood that additional operations can be provided before, during, and after processes shown by FIGS. **31**A-**38**B, and some of the operations described below can be replaced or elimi-

nated, for additional embodiments of the method. The order of the operations/processes may be interchangeable.

[0122] FIGS. **31**A and **31**B illustrate an initial structure that includes a substrate **500**. The substrate **500** may be a semiconductor substrate, such as a bulk semiconductor, a semiconductor-on-insulator (SOI) substrate, or the like, which may be doped (e.g., with a p-type or an n-type dopant) or undoped. Details about the substrate **500** are similar to that of the substrate **200**, and thus they are not repeated for the sake of brevity. FIGS. **31**A and **31**B also illustrates a fin **502** formed in the substrate **500**. In some embodiments, the fin **502** may be formed in the substrate **500** by etching trenches in the substrate **500**. The etching may be any acceptable etch process, such as a reactive ion etch (RIE), neutral beam etch (NBE), the like, or combinations thereof. The etch may be anisotropic.

[0123] The fins may be patterned by any suitable method. For example, the fin **502** may be patterned using one or more photolithography processes, including double-patterning or multi-patterning processes. Generally, double-patterning or multi-patterning processes combine photolithography and self-aligned processes, allowing patterns to be created that have, for example, pitches smaller than what is otherwise obtainable using a single, direct photolithography process. For example, in one embodiment, a sacrificial layer is formed over a substrate and patterned using a photolithography process. Spacers are formed alongside the patterned sacrificial layer using a self-aligned process. The sacrificial layer is then removed, and the remaining spacers may then be used to pattern the fins. In some embodiments, the mask (or other layer) may remain on the fin **502**.

[0124] Once fins **502** are formed, an insulation material **505** is formed over the substrate **500** and between neighboring fins **502**. The insulation material **505** may be an oxide, such as silicon oxide, a nitride, the like, or a combination thereof, and may be formed by a high density plasma chemical vapor deposition (HDP-CVD), a flowable CVD (FCVD) (e.g., a CVD-based material deposition in a remote plasma system and post curing to make it convert to another material, such as an oxide), the like, or combinations thereof. Other insulation materials formed by any acceptable process may be used. In the illustrated embodiment, the insulation material **505** is silicon oxide formed by a FCVD process. An anneal process may be performed once the insulation material is formed. In some embodiments, the insulation material **505** is formed such that excess insulation material **505** covers the fin **502**. Although the insulation material **505** is illustrated as a single layer, some embodiments may utilize multiple layers. For example, in some embodiments a liner (not shown) may first be formed along a surface of the substrate **500** and the fins **502**. Thereafter, a fill material, such as those discussed above may be formed over the liner.

[0125] Once the insulation material **505** is deposited over the fin **502**, a removal process is applied to the insulation material **505** to remove excess insulation material **505** over the fin **502**. In some embodiments, a planarization process such as a chemical mechanical polish (CMP), an etch-back process, combinations thereof, or the like may be utilized. The planarization process exposes the fin **502** such that top surface of the fin **502** and the insulation material **505** are level after the planarization process is complete.

[0126] In FIGS. **32**A-**32**B, the insulation material **505** is recessed to form Shallow Trench Isolation (STI) regions **506**. The insulation material **505** is recessed such that upper portion of fin **502** protrudes from between neighboring STI regions **506**. Further, the top surface of the STI region **506** may have a flat surface as illustrated, a convex surface, a concave surface (such as dishing), or combinations thereof. The top surface of the STI region **506** may be formed flat, convex, and/or concave by an appropriate etch. The STI region **506** may be recessed using an acceptable etching process, such as one that is selective to the material of the insulation material **505** (e.g., etches the material of the insulation material **505** at a faster rate than the material of the fin **502**). For example, an oxide removal using, for example, dilute hydrofluoric (dHF) acid may be used.

[0127] The process described with respect to FIGS. **31**A-**32**B is just one example of how the fins **502** may be formed. In some embodiments, fins may be formed by an epitaxial growth process. For example, a dielectric layer can be formed over a top surface of the substrate **500**, and trenches can be etched through the dielectric layer to expose the underlying substrate **500**. Homoepitaxial structures can be epitaxially grown in the trenches, and the dielectric layer can be recessed such that the homoepitaxial structures protrude from the dielectric layer to form fins. Additionally, in some embodiments, heteroepitaxial structures can be used for the fins **502**. For example, the fin **502** in FIGS. **32**A-**32**B can be recessed, and a material different from the fin **502** may be epitaxially grown over the recessed fin **502**. In such embodiments, the fin **502** comprises the recessed material as well as the epitaxially grown material disposed over the recessed material. In an even further embodiment, a dielectric layer can be formed over a top surface of the substrate **500**, and trenches can be etched through the dielectric layer. Heteroepitaxial structures can then be epitaxially grown in the trenches using a material different from the substrate **500**, and the dielectric layer can be recessed such that the heteroepitaxial structures protrude from the dielectric layer to form the fins **502**. In some embodiments where homoepitaxial or heteroepitaxial structures are epitaxially grown, the epitaxially grown materials may be in-situ doped during growth, which may obviate prior and subsequent implantations although in situ and implantation doping may be used together.

[0128] In FIGS. **33**A-**33**B, a dummy gate dielectric layer **602** is formed over the fin **502**, and a dummy gate structure **604** is formed over the dummy gate dielectric layer **602**. Formation of the dummy gate dielectric layer **602** and the dummy gate structure **604** includes, for example, depositing a layer of dielectric material over the fin **502** and a layer of dummy gate material over the layer of dielectric material by using suitable deposition techniques, followed by patterning the layer of dummy gate material into the dummy gate structure **604** and patterning the layer of dielectric material into the dummy gate dielectric layer **602** by using suitable photolithography and etching techniques. The resultant dummy gate structure **604** has a longitudinal axis perpendicular to the longitudinal axis of the fin **502**. Materials of the dummy gate dielectric layer **602** and the dummy gate structure **604** are similar to that of the sacrificial dielectric layer **306** and dummy gate structure **308** as discussed previously with respect to FIGS. **12**A and **12**B.

[0129] In FIGS. **34**A and **34**B, gate spacers **530** are formed on sidewalls of the dummy gate structure **608**. In some embodiments of the spacer formation step, a spacer material layer is deposited on the substrate **500**. An anisotropic

etching process is then performed on the deposited spacer material layer to expose portions of the fin **502** not covered by the dummy gate structure **604** (e.g., in source/drain regions of the fin **502**). Portions of the spacer material layer directly above the dummy gate structure **604** may be completely removed by this anisotropic etching process. Portions of the spacer material layer on sidewalls of the dummy gate structure **604** may remain, forming gate sidewall spacers, which is denoted as the gate spacers **530**, for the sake of simplicity. Materials of the gate spacers **530** are similar to that of the gate spacers **230** as discussed previously with respect to FIGS. **13**A and **13**B, and thus they are not repeated for the sake of brevity.

[0130] After the gate spacers **530** are formed, epitaxial source/drain regions **508** are formed on the fin **502** and on opposite sides of the dummy gate structure **604**. For example, exposed portions of the semiconductor fin **502** that extend laterally beyond the gate spacers **530** (e.g., in source and drain regions of the fin **502**) are etched by using, for example, an anisotropic etching process that uses the dummy gate structure **604** and the gate spacers **530** as an etch mask, resulting in recesses into the semiconductor fin **502**. In some embodiments, the anisotropic etching may be performed by a dry chemical etch with a plasma source and a reaction gas. The plasma source may be an inductively coupled plasma (ICR) source, a transformer coupled plasma (TCP) source, an electron cyclotron resonance (ECR) source or the like, and the reaction gas may be, for example, a fluorine-based gas (such as SF_6, CH_2F_2, CH_3F, CHF_3, or the like), chloride-based gas (e.g., Cl_2), hydrogen bromide gas (HBr), oxygen gas (O_2), the like, or combinations thereof. Then, the epitaxial source/drain regions **508** are epitaxially grown in the recesses of the fin **502**. Suitable epitaxial processes include CVD deposition techniques (e.g., vapor-phase epitaxy (VPE) and/or ultra-high vacuum CVD (UHV-CVD)), molecular beam epitaxy, and/or other suitable processes. The epitaxial growth process may use gaseous and/or liquid precursors, which interact with the composition of semiconductor material of the fin **502**. In some embodiments, an epitaxial material may be deposited by a selective epitaxial growth (SEG) process to fill the recesses of the fin **502** and extend further beyond the original surface of the semiconductor fin **502** to form raised epitaxy structures **508**, which have top surfaces higher than top surfaces of the semiconductor fin **502**. Details about epitaxial materials and dopants of the epitaxial source/drain regions **508** are similar to the epitaxial source/drain regions **208** as discussed previously with respect to FIGS. **14**A and **14**B, and thus they are not repeated for the sake of brevity.

[0131] In FIGS. **35**A and **35**B, an ILD layer **542** is formed over the substrate **500**. The ILD layer **542** may be formed of a dielectric material, and may be deposited by any suitable method, such as CVD, plasma-enhanced CVD (PECVD), or FCVD. Dielectric materials may include phospho-silicate glass (PSG), boro-silicate glass (BSG), boron-doped phospho-silicate glass (BPSG), undoped silicate glass (USG), or the like. Other insulation materials formed by any acceptable process may be used. Then, a planarization process, such as a CMP, may be performed to level the top surface of the ILD layer **542** with the top surface of the dummy gate structure **604**.

[0132] FIGS. **35**A and **35**B also illustrate cutting or separation of the dummy gate structure **604** into individual and separated dummy gates **606** in accordance with some embodiments. For example, one or more etching processes are performed to cut the dummy gate structure **604**, so that a gate-cut opening **607** is formed between individual dummy gates **606**. During the one or more etching processes, a patterned mask (not shown) can be formed to protect portions of the dummy gate structure **604** that are not to be removed, and the patterned mask can be removed after the one or more etching processes. The etching duration time is controlled such that the etching stops when the top surface of the fin **502** gets exposed. In some embodiments, the dummy gate dielectric layer **602** is also etched and separated into individual dummy gate dielectric layers **603** as well. In some embodiments where the dummy gate structure **604** is formed of polysilicon, the gate-cut opening **607** can be referred to as cut polysilicon (CPO) regions that cut the polysilicon gates.

[0133] In FIGS. **36**A and **36**B, a gate-cut dielectric structure **529** is formed in the gate-cut opening **607** and interposing the dummy gates **606**. In some embodiments, the gate-cut dielectric structure **529** is formed by, for example, depositing one or more dielectric materials (e.g., silicon oxide) into the gate-cut opening **607**, followed by a CMP process to remove excess dielectric materials outside the gate-cut opening **607**.

[0134] In FIGS. **37**A and **37**B, the dummy gates **606** and the dummy gate dielectric layers **603** are removed by one or more selective etching processes. The dummy gate removal step form two first and second gate trenches GT**2** and GT**3** on opposite sides of the fin **502** and also on opposite sides of the gate-cut dielectric structure **529**.

[0135] In FIGS. **38**A and **38**B, a first gate structure **510** and a second gate structure **512** are HKMG structures formed respectively in the first and second gate trenches GT**2** and GT**3**. In some embodiments about the HKMG formation step, an interfacial layer is formed over the substrate **500** and in both the first and second gate trench GT**2** and GT**3**, a high-k dielectric layer is deposited over the interfacial layer, a work function metal layer is deposited over the high-k dielectric layer, and a gate fill metal is deposited over the work function metal layer. Then, a CMP process is performed on these materials until the gate-cut dielectric structure **529** is exposed. After the CMP process is complete, remaining materials in the first gate trench GT**2** collectively serve as the first gate structure **510** and comprise an interfacial layer **514**, a high-k dielectric layer **516** over the interfacial layer **514**, a work function metal layer **518** over the high-k dielectric layer **516**, and a gate fill metal **520** over the work function metal layer **518**; and remaining materials in the second gate trench GT**3** collectively serve as the second gate structure **512** and comprise an interfacial layer **522**, a high-k dielectric layer **524** over the interfacial layer **522**, a work function metal layer **526** over the high-k dielectric layer **524**, and a gate fill metal **528** over the work function metal layer **526**. In some embodiments, before depositing the gate fill metal in the gate trenches GT**2** and GT**3**, horizontal portions of the work function metal layer, high-k dielectric layer, and interfacial layer can be removed from the STI regions **506** by an anisotropic etching process, and thus the resultant gate fill metal will be in contact with the STI regions **506** as illustrated in FIG. **38**B. In some other embodiments, horizontal portions of the work function metal layer, high-k dielectric layer, and interfacial layer can also remain on the STI regions **506**. In that case, the gate fill metal will be spaced from the STI regions **506**.

[0136] Based on the above discussions, it can be seen that the present disclosure in various embodiments offers advantages. It is understood, however, that other embodiments may offer additional advantages, and not all advantages are necessarily disclosed herein, and that no particular advantage is required for all embodiments. One advantage is that in the IC structure each 1T-1MTJ MRAM cell not only serves as a memory device for storing data, but also serves as a logic device for performing logic computation, which in turn realizes in-memory computing using a single 1T-1MTJ MRAM cell. Another advantage is that data transfer between memory devices and logic devices can be skipped, the logic operation results of each MRAM cell can be stored in its MTJ cell.

[0137] In some embodiments, an IC structure comprises an MTJ cell, a transistor, a first word line, and a second word line. The transistor is electrically coupled to the MTJ cell. The transistor comprises a first gate terminal and a second gate terminal independent of the first gate terminal. The first word line is electrically coupled to the first gate terminal of the transistor. The second word line is electrically coupled to the second gate terminal of the transistor. A resistance state of the MTJ cell is dependent on a first word line voltage applied to the first word line and a second word line voltage applied to the second word line, and the resistance state of the MTJ cell follows an AND gate logic or an OR gate logic. In some embodiments, the resistance state of the MTJ cell is unchanged when a first one of the first and second word line voltages is a high voltage, and a second one of the first and second word line voltage is a low voltage lower than the high voltage. In some embodiments, the resistance state of the MTJ cell is switched when the first and second word line voltages are non-zero voltages. In some embodiments, the resistance state of the MTJ cell is switched from a low resistance state having a first resistance to a high resistance state having a second resistance higher than the first resistance. In some embodiments, the resistance state of the MTJ cell is switched when one of the first and second word line voltages is a non-zero voltage. In some embodiments, the transistor is a gate-all-around (GAA) transistor. In some embodiments, the transistor further comprises a plurality of channel layers, and each of the plurality of channel layers has different regions respectively controlled by the first gate terminal and the second gate terminal. In some embodiments, the transistor is a FinFET. In some embodiments, the transistor further comprises a semiconductor fin, and the semiconductor fin has a first region controlled by the first gate terminal and a second region controlled by the second gate terminal.

[0138] In some embodiments, an IC structure comprises a source region and a drain region, a plurality of channel layers, a first gate structure and a second gate structure. The source region and the drain region are on a substrate. The plurality of channel layers are arranged one above another over the substrate, and extend from the source region to the drain region. The first gate structure and the second gate structure laterally between the source region and the drain region. The first gate structure is electrically isolated from the second gate structure. The plurality of channel layers comprise a first channel layer having a bottom surface contacting the first gate structure and a top surface contacting the second gate structure. In some embodiments, the plurality of channel layers further comprise a second channel layer having a bottom surface contacting the second gate structure and a top surface contacting the first gate structure. In some embodiments, the second channel layer is above the first channel layer. In some embodiments, the plurality of channel layers further comprise a third channel layer having a bottom surface contacting the first gate structure and a top surface contacting the second gate structure. In some embodiments, the third channel layer is above the second channel layer. In some embodiments, the IC structure further comprises an MTJ cell electrically coupled to one of the source region and the drain region. In some embodiments, the MTJ cell has a resistance state which is dependent on a first voltage applied to the first gate structure and a second voltage applied to the second gate structure and which follows an AND gate logic or an OR gate logic.

[0139] In some embodiments, a method includes forming a fin structure having a stack of alternating first semiconductor layers, second semiconductor layers, and third semiconductor layers over a substrate; etching the first semiconductor layers to form a first space between a first one and a second one of the second semiconductor layers; forming a first gate structure in the first space between the first one and the second one of the second semiconductor layers; etching the third semiconductor layers to form a second space between the second one and a third one of the second semiconductor layers; and forming a second gate structure in the second space between the second one and the third one of the second semiconductor layers. In some embodiments, etching the first semiconductor layers further forms a third space below the third one of the second semiconductor layers, and the first gate structure is further formed in the third space. In some embodiments, etching the third semiconductor layers further forms a fourth space above the first one of the second semiconductor layers, and the second gate structure is further formed in the fourth space.

[0140] The foregoing outlines features of several embodiments so that those skilled in the art may better understand the aspects of the present disclosure. Those skilled in the art should appreciate that they may readily use the present disclosure as a basis for designing or modifying other processes and structures for carrying out the same purposes and/or achieving the same advantages of the embodiments introduced herein. Those skilled in the art should also realize that such equivalent constructions do not depart from the spirit and scope of the present disclosure, and that they may make various changes, substitutions, and alterations herein without departing from the spirit and scope of the present disclosure.

What is claimed is:

1. An integrated circuit (IC) structure comprising:

a magnetic tunnel junction (MTJ) cell;

a transistor electrically coupled to the MTJ cell, the transistor comprising a first gate terminal and a second gate terminal independent of the first gate terminal, wherein in a cross-sectional view, the first gate terminal a first portion and a second portion extending along a first direction, the second gate terminal has a portion extending along the first direction and disposed between the first portion and the second portion of the first gate terminal;

a first word line electrically coupled to the first gate terminal of the transistor; and

a second word line electrically coupled to the second gate terminal of the transistor, wherein a resistance state of the MTJ cell is dependent on a first word line voltage

applied to the first word line and a second word line voltage applied to the second word line, and the resistance state of the MTJ cell follows an AND gate logic or an OR gate logic.

2. The IC structure of claim **1**, wherein the resistance state of the MTJ cell is unchanged when a first one of the first and second word line voltages is a high voltage, and a second one of the first and second word line voltage is a low voltage lower than the high voltage.

3. The IC structure of claim **1**, wherein the resistance state of the MTJ cell is switched when the first and second word line voltages are non-zero voltages.

4. The IC structure of claim **3**, wherein the resistance state of the MTJ cell is switched from a low resistance state having a first resistance to a high resistance state having a second resistance higher than the first resistance.

5. The IC structure of claim **1**, wherein the resistance state of the MTJ cell is switched when one of the first and second word line voltages is a non-zero voltage.

6. The IC structure of claim **5**, wherein the resistance state of the MTJ cell is switched from a low resistance state having a first resistance to a high resistance state having a second resistance higher than the first resistance.

7. The IC structure of claim **1**, wherein the transistor is a gate-all-around (GAA) transistor.

8. The IC structure of claim **1**, wherein the transistor further comprises a plurality of channel layers, and each of the plurality of channel layers has different regions respectively controlled by the first gate terminal and the second gate terminal.

9. The IC structure of claim **1**, wherein the transistor is a fin field-effect transistor (FinFET).

10. The IC structure of claim **1**, wherein the transistor further comprises a semiconductor fin, and the semiconductor fin has a first region controlled by the first gate terminal and a second region controlled by the second gate terminal.

11. An IC structure comprising:

a source region and a drain region on a substrate;

a plurality of channel layers arranged one above another over the substrate, and extending from the source region to the drain region; and

a first gate structure and a second gate structure laterally between the source region and the drain region, wherein the first gate structure is electrically isolated from the second gate structure, and the plurality of channel layers comprise a first channel layer having a bottom surface contacting the first gate structure and a top surface contacting the second gate structure in a cross-sectional view.

12. The IC structure of claim **11**, wherein the plurality of channel layers further comprise a second channel layer having a bottom surface contacting the second gate structure and a top surface contacting the first gate structure.

13. The IC structure of claim **12**, wherein the second channel layer is above the first channel layer.

14. The IC structure of claim **12**, wherein the plurality of channel layers further comprise a third channel layer having a bottom surface contacting the first gate structure and a top surface contacting the second gate structure.

15. The IC structure of claim **14**, wherein the third channel layer is above the second channel layer.

16. The IC structure of claim **11**, further comprising:

a magnetic tunnel junction (MTJ) cell electrically coupled to one of the source region and the drain region.

17. The IC structure of claim **16**, wherein the MTJ cell has a resistance state which is dependent on a first voltage applied to the first gate structure and a second voltage applied to the second gate structure and which follows an AND gate logic or an OR gate logic.

18. An IC structure comprising:

a first channel region over a substrate;

a first source/drain feature interfacing a first sidewall of the first channel region;

a second source/drain feature interfacing a second sidewall of the first channel region; and

a first gate structure and a second gate structure disposed between the first source/drain feature and the second source/drain feature in a top view, the first channel region being vertically disposed between the first gate structure and the second gate structure in a cross-sectional view.

19. The IC structure of claim **18**, wherein the first channel region has a bottom surface interfacing the first gate structure and a top surface interfacing the second gate structure.

20. The IC structure of claim **18**, further comprising:

a second channel region over the first channel region, and spaced apart from the first channel region by the second gate structure.

* * * * *