US 20250287799A1

(19) United States
(12) Patent Application Publication
KA et al.
(10) Pub. No.: US 2025/0287799 A1
(43) Pub. Date: Sep. 11, 2025

(54) **DISPLAY APPARATUS AND METHOD OF MANUFACTURING DISPLAY APPARATUS**

(71) Applicant: **SAMSUNG DISPLAY CO., LTD.**, YONGIN-SI (KR)

(72) Inventors: **JI-HYUN KA**, ASAN-SI (KR); **SEUNG-KYU LEE**, ASAN-SI (KR); **HWAN-SOO JANG**, ASAN-SI (KR); **JIN-TAE JEONG**, SUWON-SI (KR)

(21) Appl. No.: **19/215,690**

(22) Filed: **May 22, 2025**

Related U.S. Application Data

(63) Continuation of application No. 18/654,066, filed on May 3, 2024, now Pat. No. 12,336,405, which is a continuation of application No. 18/134,683, filed on Apr. 14, 2023, now Pat. No. 12,004,397, which is a continuation of application No. 17/090,493, filed on Nov. 5, 2020, now Pat. No. 11,631,730, which is a continuation of application No. 16/902,342, filed on Jun. 16, 2020, now Pat. No. 10,854,705, which is a continuation of application No. 16/390,196, filed on Apr. 22, 2019, now Pat. No. 10,700,155, which is a continuation of application No. 16/184,224, filed on Nov. 8, 2018, now Pat. No. 10,297,655, which is a continuation of application No. 15/404,661, filed on Jan. 12, 2017, now Pat. No. 10,134,826.

(30) **Foreign Application Priority Data**

Apr. 12, 2016 (KR) 10-2016-0045087

Publication Classification

(51) **Int. Cl.**

H10K 59/131	(2023.01)
H10K 59/12	(2023.01)
H10K 59/121	(2023.01)
H10K 59/123	(2023.01)
H10K 59/124	(2023.01)
H10K 71/00	(2023.01)

(52) **U.S. Cl.**

CPC ***H10K 59/131*** (2023.02); ***H10K 59/1213*** (2023.02); ***H10K 59/123*** (2023.02); ***H10K 59/124*** (2023.02); ***H10K 71/00*** (2023.02); *H10K 59/1201* (2023.02); *H10K 59/121* (2023.02)

(57) **ABSTRACT**

A display apparatus includes a substrate including a display area, a peripheral area surrounding the display area, a function-adding area, of which at least a portion is surrounded by the display area, and a detour area disposed between the display area and the function-adding area. The display apparatus includes a plurality of pixel circuits disposed in the display area. A plurality of driving lines are electrically connected to the pixel circuits and extend in a direction in the display area. A first detour line is disposed in the detour area and is electrically connected to a first driving line. A second detour line is disposed in the detour area. The second detour line is electrically connected to a second driving line and is disposed in a different layer from the first detour line.

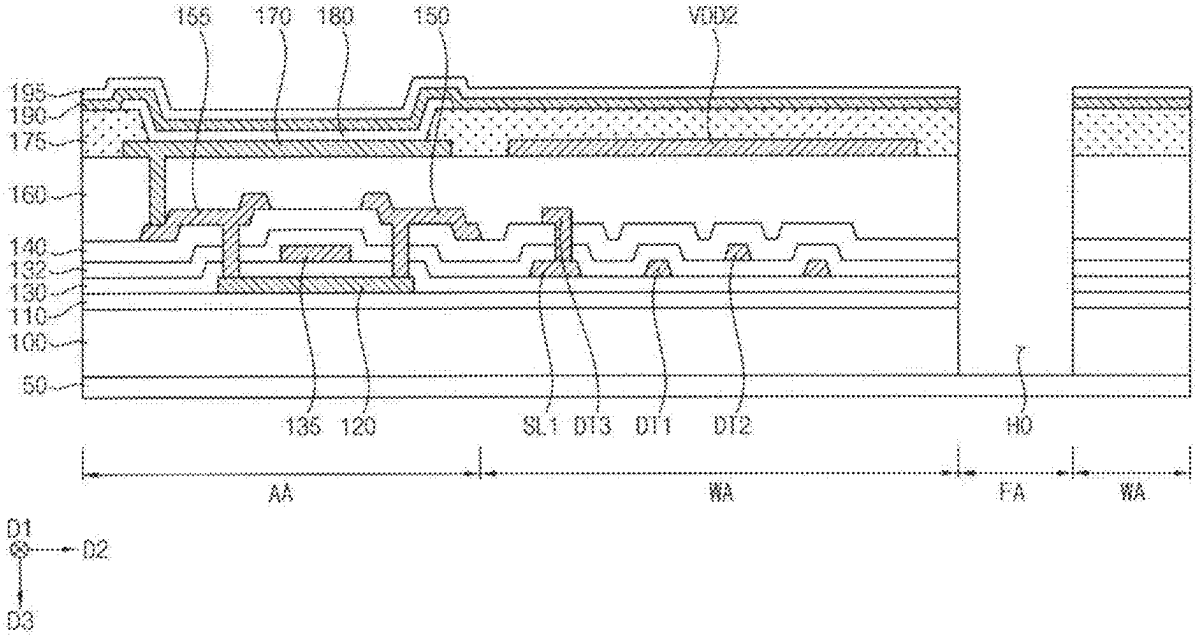

FIG. 1

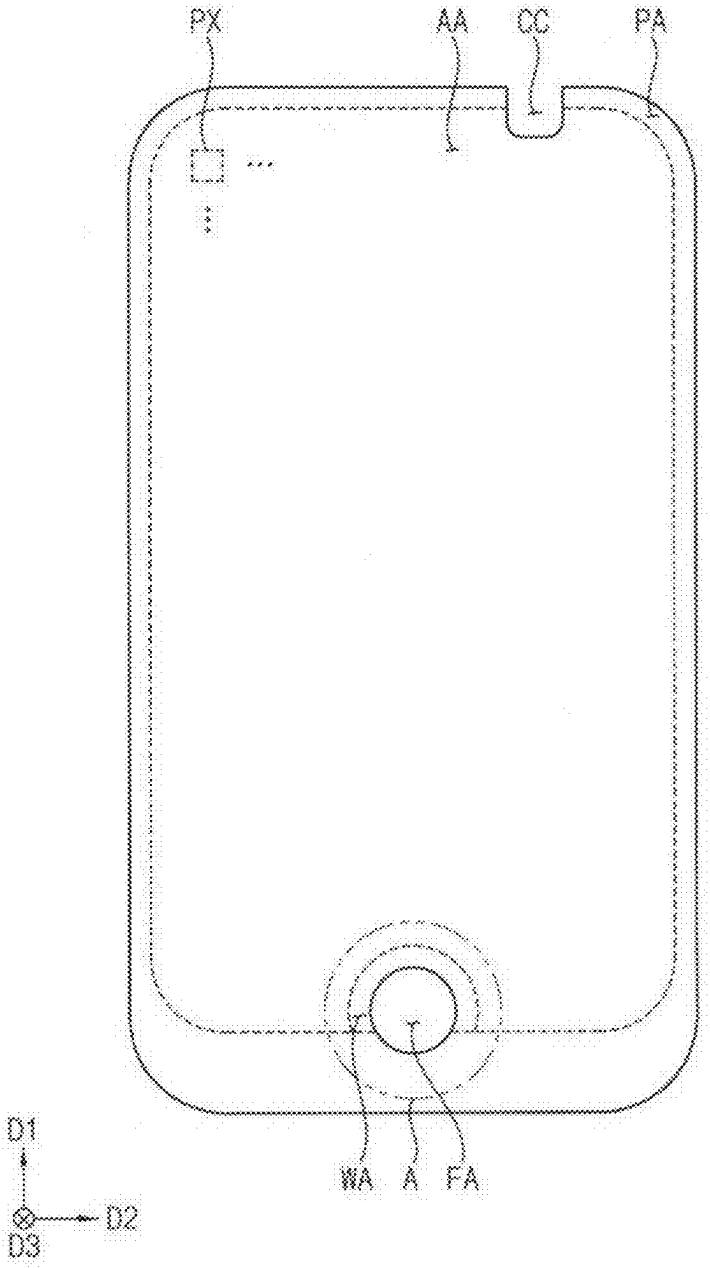

FIG. 2

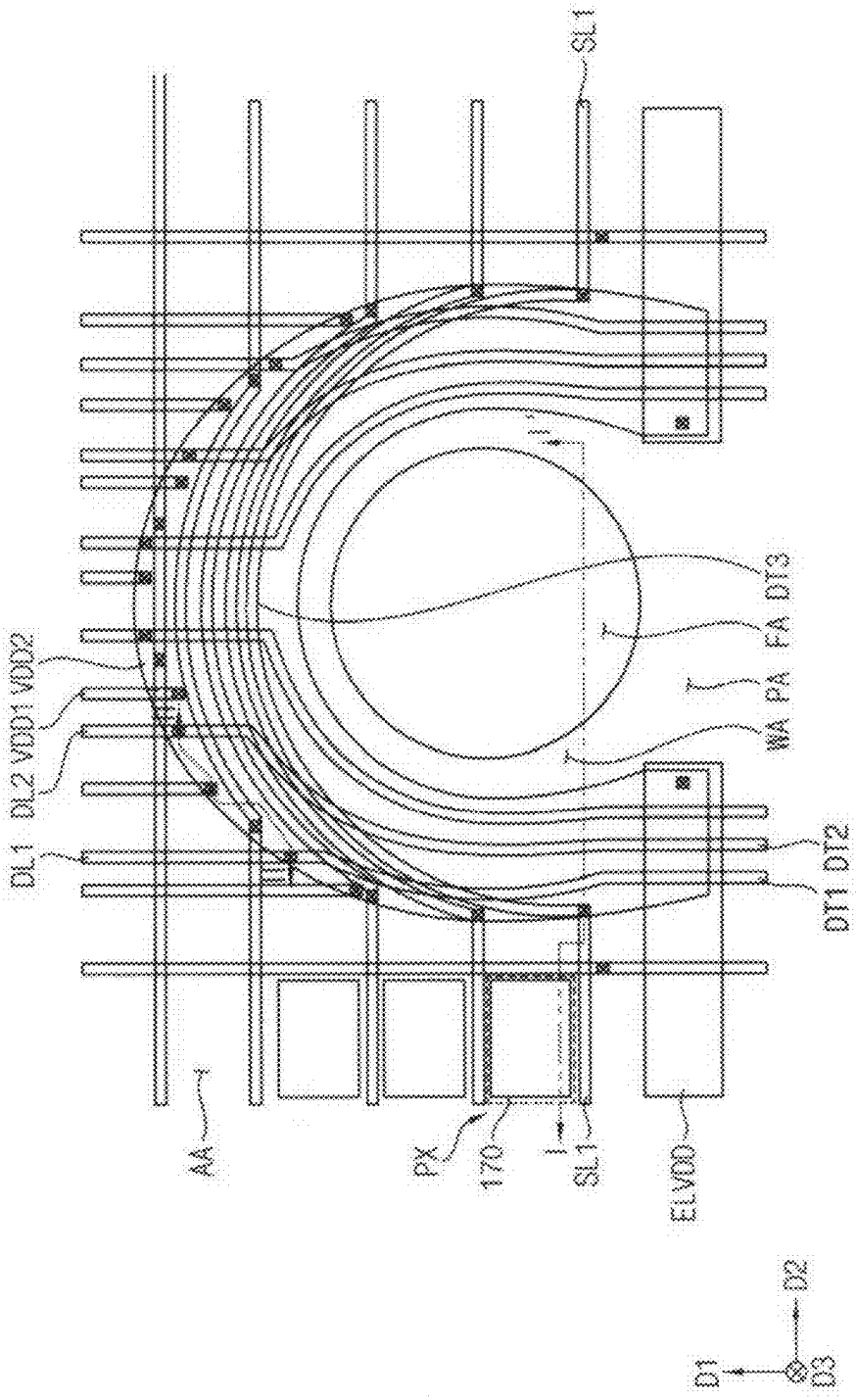
DL1
DL2
VDD1
VDD2
AA
PX
170
SL1
ELVDD
DT1
DT2
WA
PA
FA
DT3
SL1
D1
D2
D3

FIG. 3

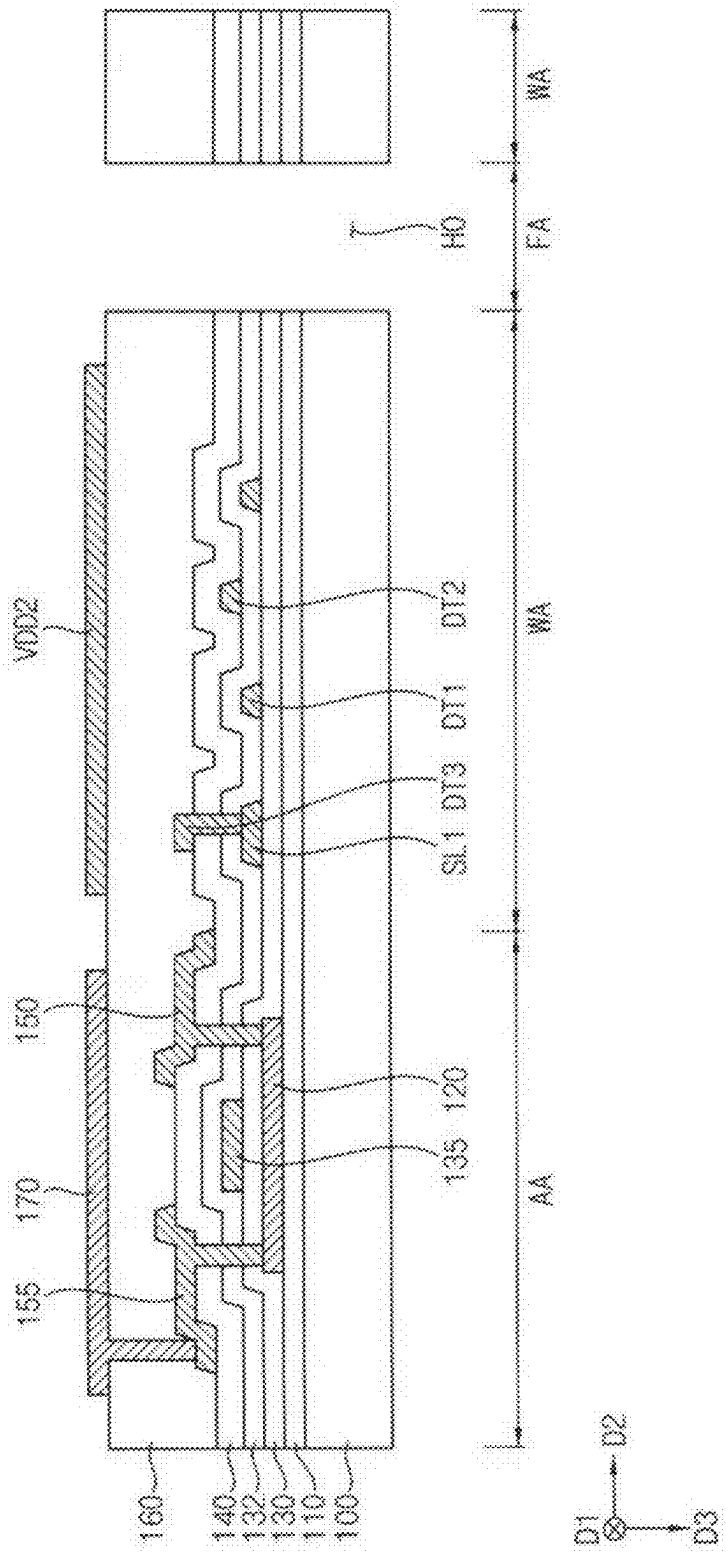
VDD2
160
170
155
160
140
132
130
110
100
DT2
DT1
DT3
SL1
120
135
T
H0
WA
FA
WA
AA
D1
D2
D3

FIG. 4

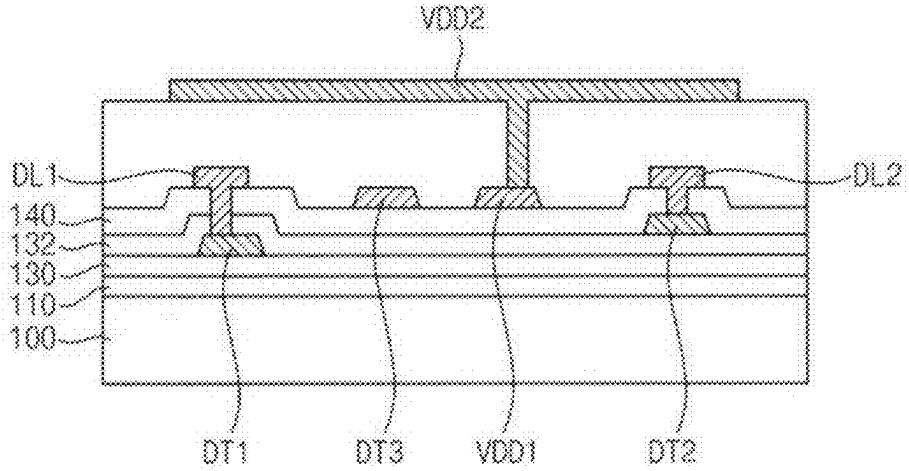

FIG. 5

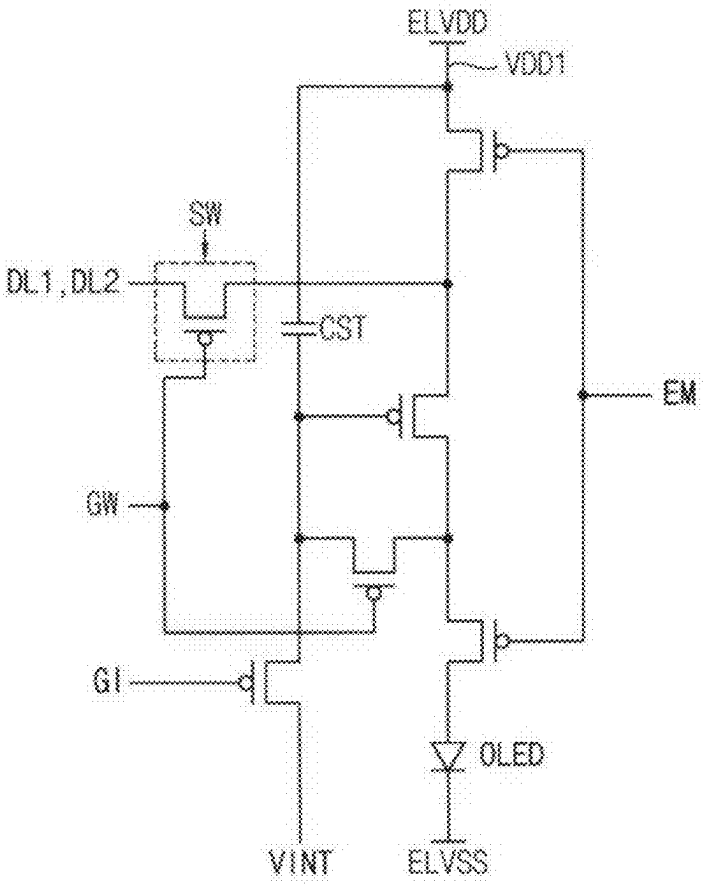

FIG. 6

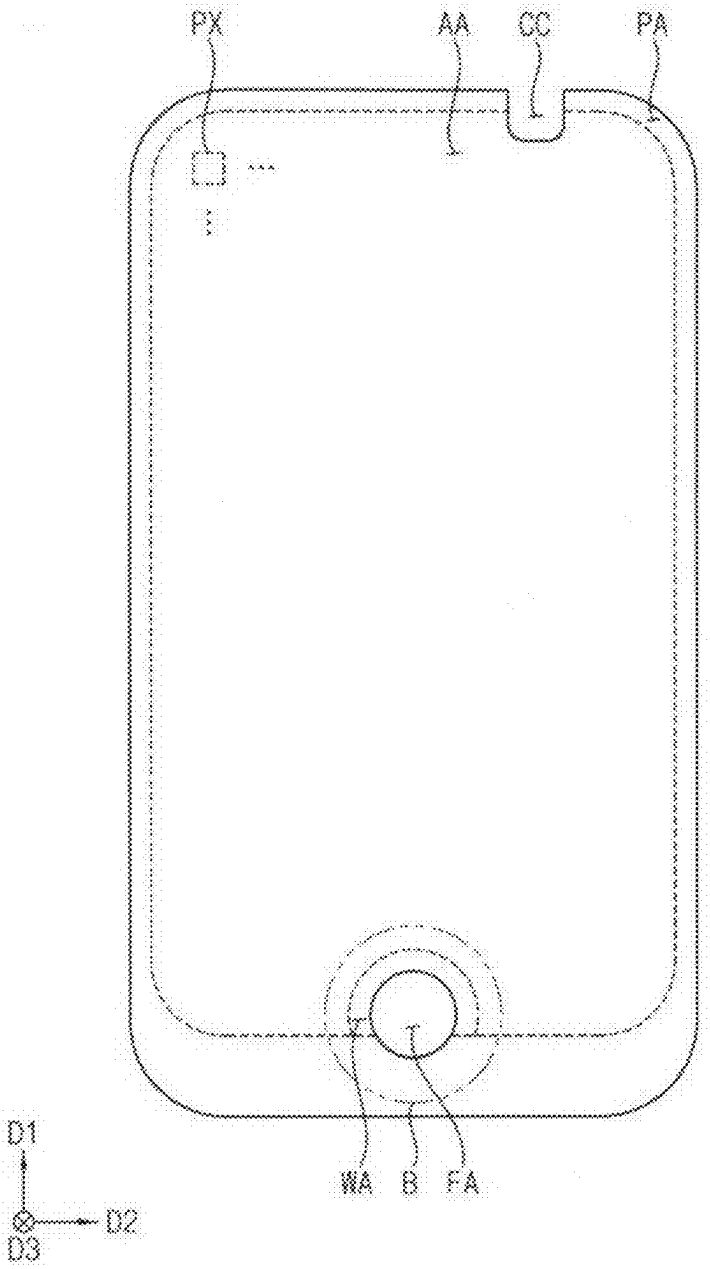

FIG. 7

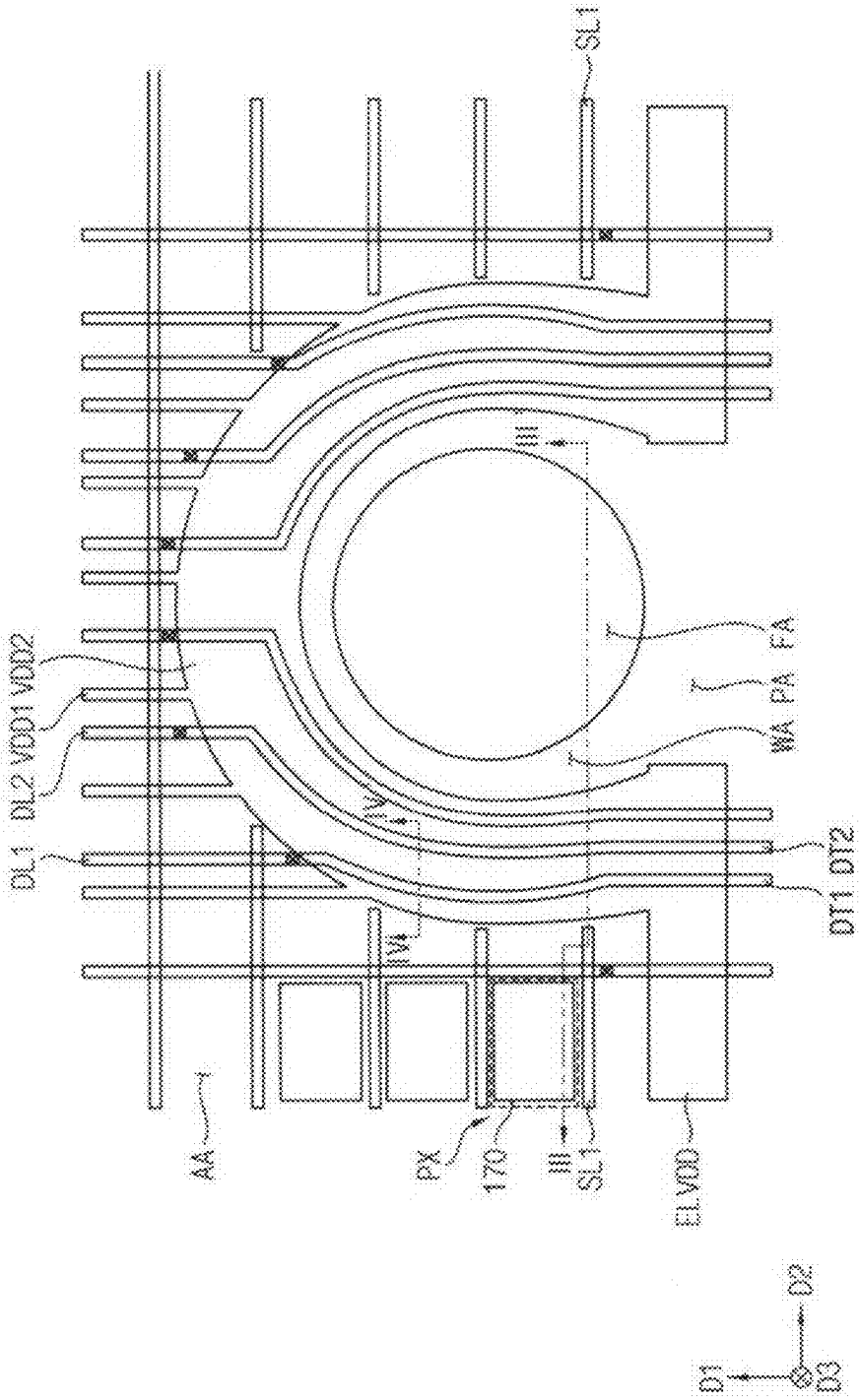
SL1
III
FA
PA
WA
DL1
DL2
VDD1
VDD2
IV
IV
DT1
DT2
AA
PX
170
III
SL1
ELVDD
D1
D2
D3

FIG. 8

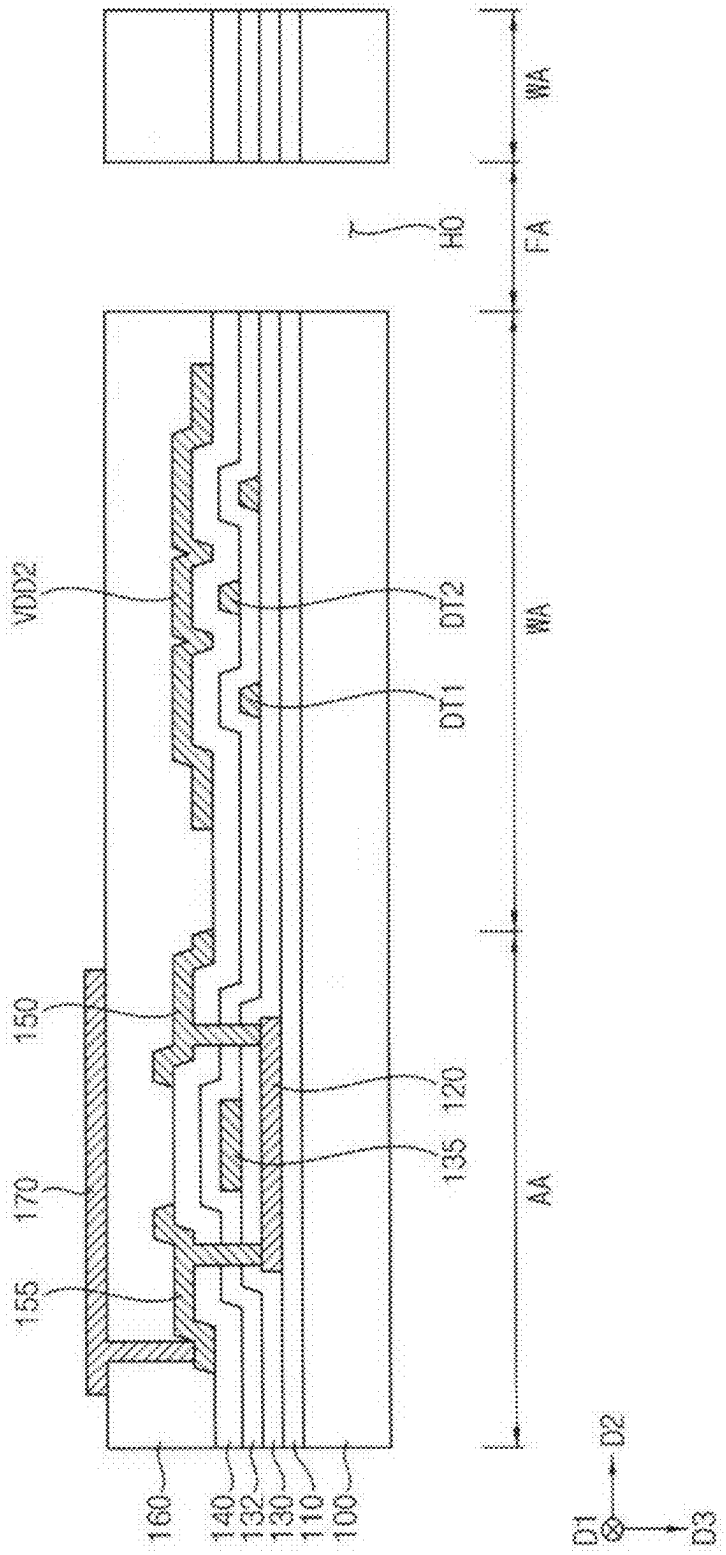
VDD2
DT2
DT1
150
120
135
170
155
160
140
132
130
110
100
T
H0
WA
FA
WA
AA
D1
D2
D3

FIG. 9

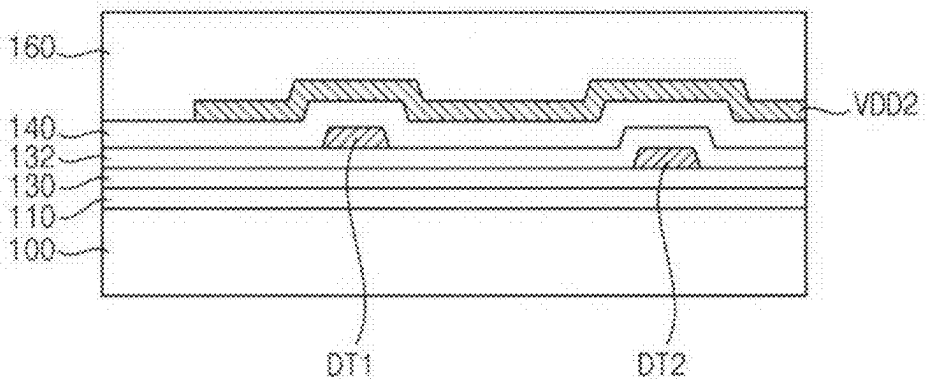

FIG. 10

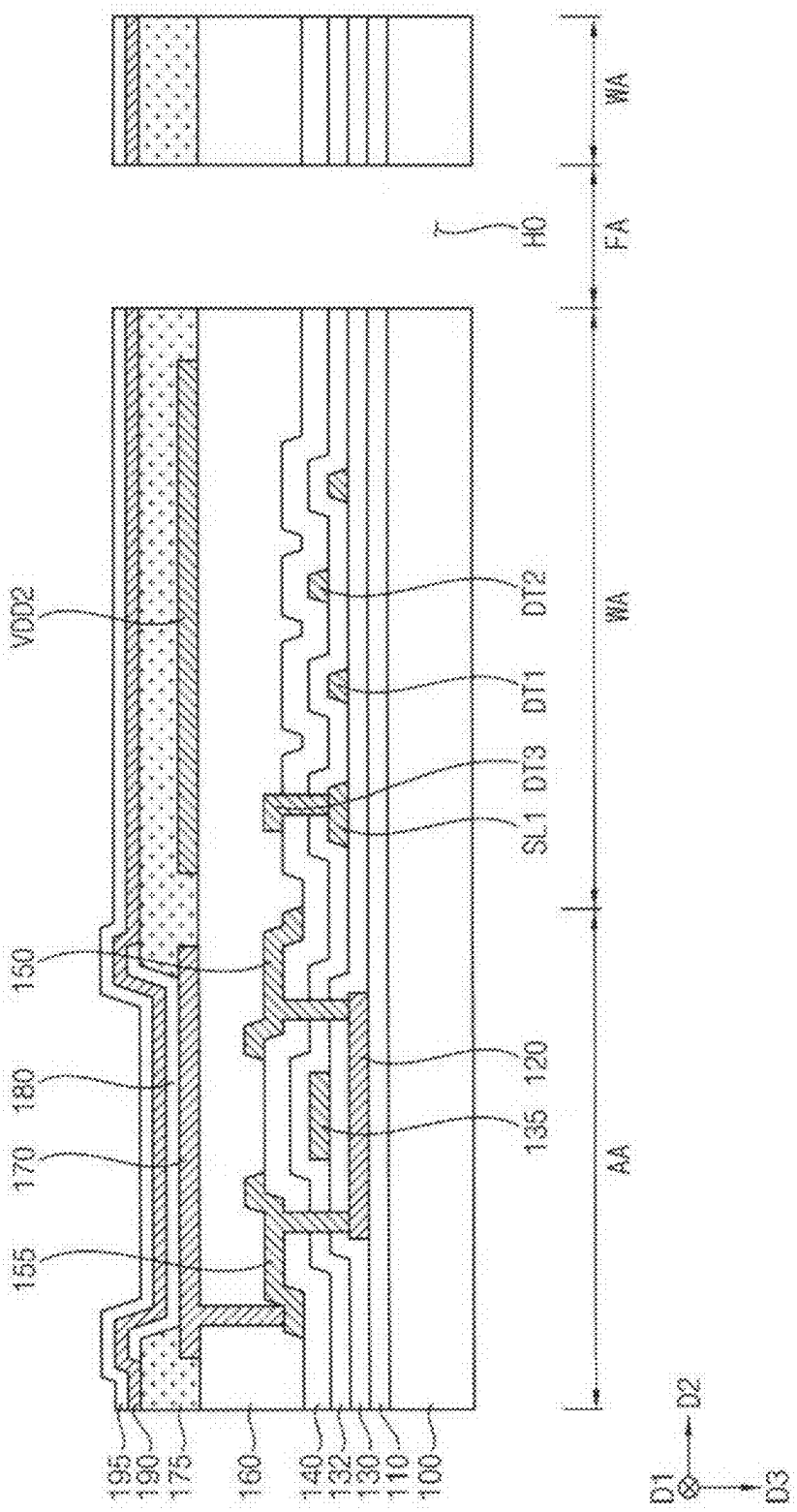
VDD2
150
180
170
155
195
190
175
160
140
132
130
110
100
DT2
DT1
DT3
SL1
120
135
AA
WA
FA
WA
T
H0
D1
D2
D3

FIG. 11

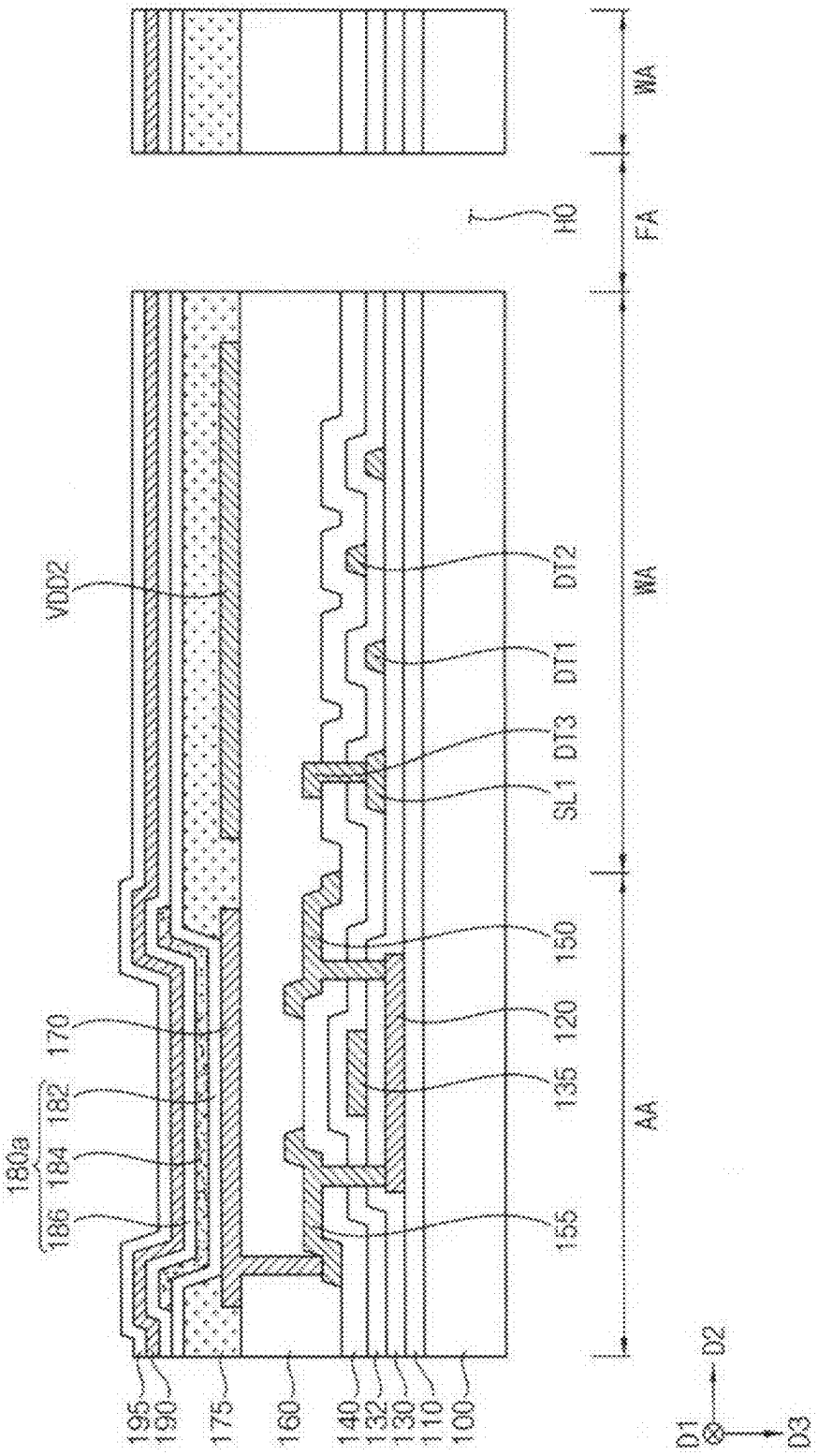
VDD2
170
182
180a
184
186
195
190
175
160
140
132
130
110
100
155
135
120
150
SL1
DT3
DT1
DT2
AA
WA
T
H0
FA
WA
D1
D2
D3

FIG. 12

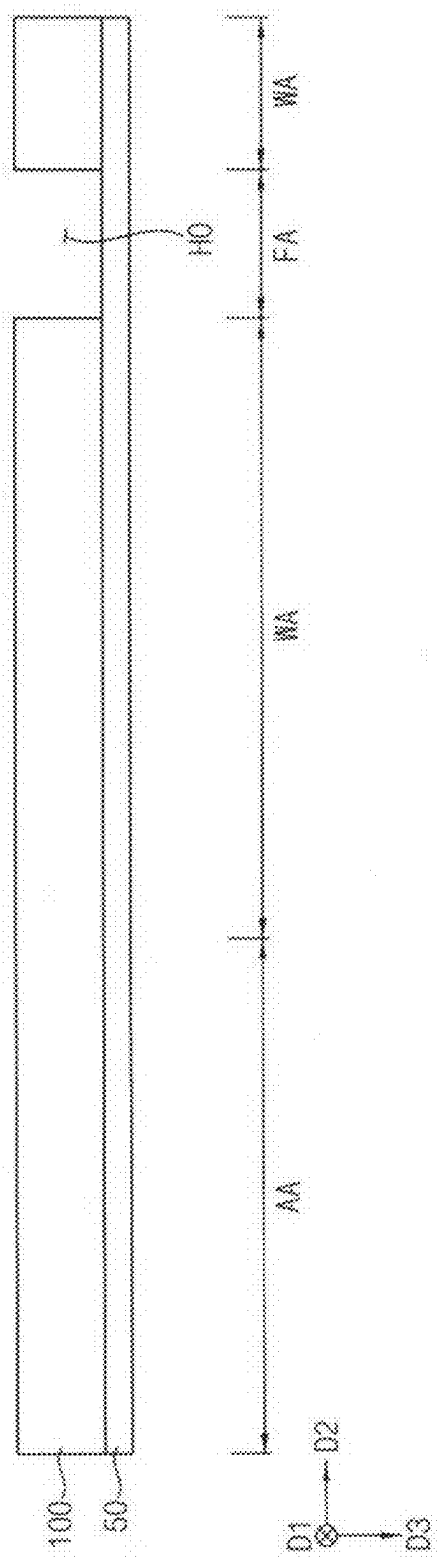

FIG. 13

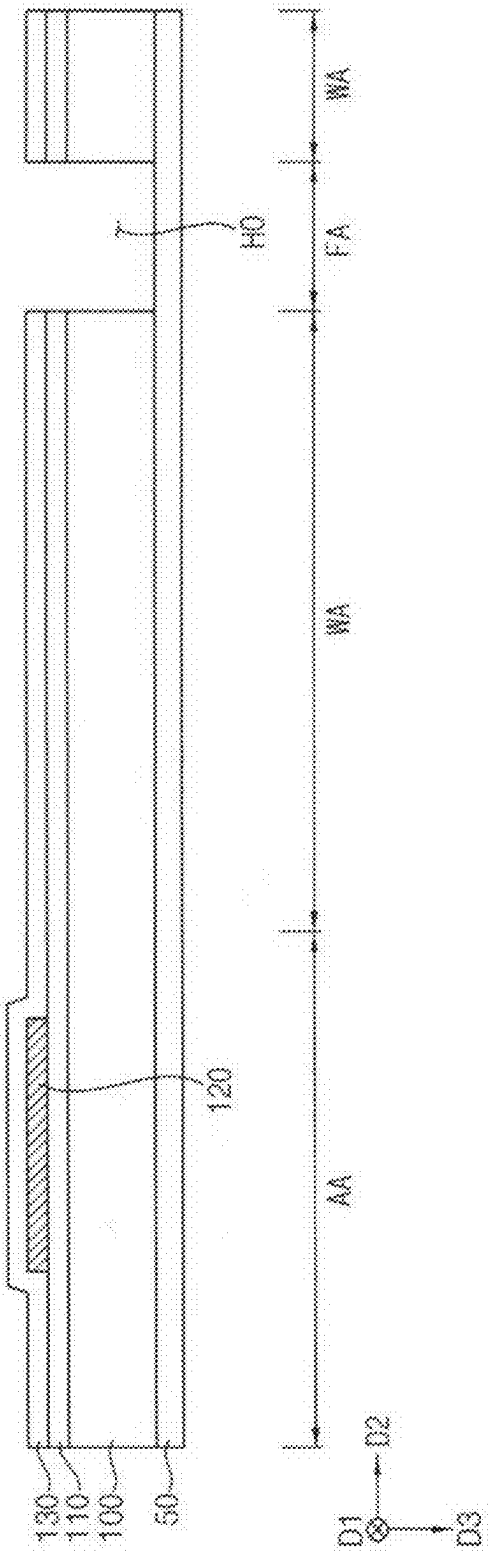

FIG. 14

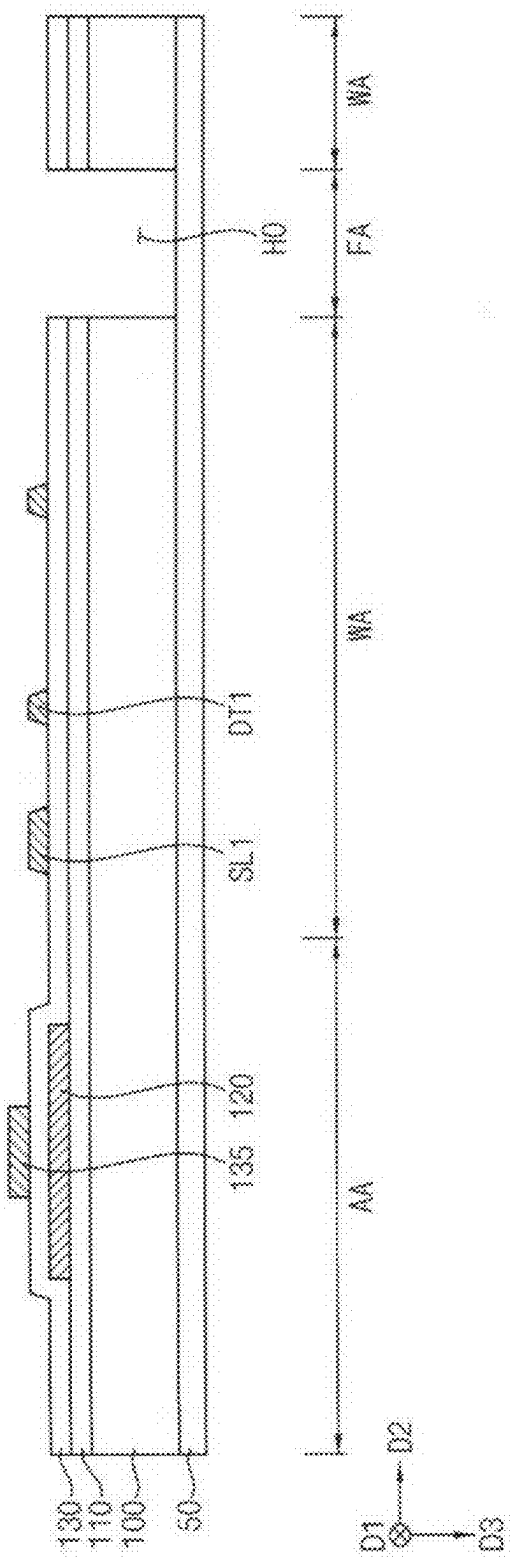

FIG. 15

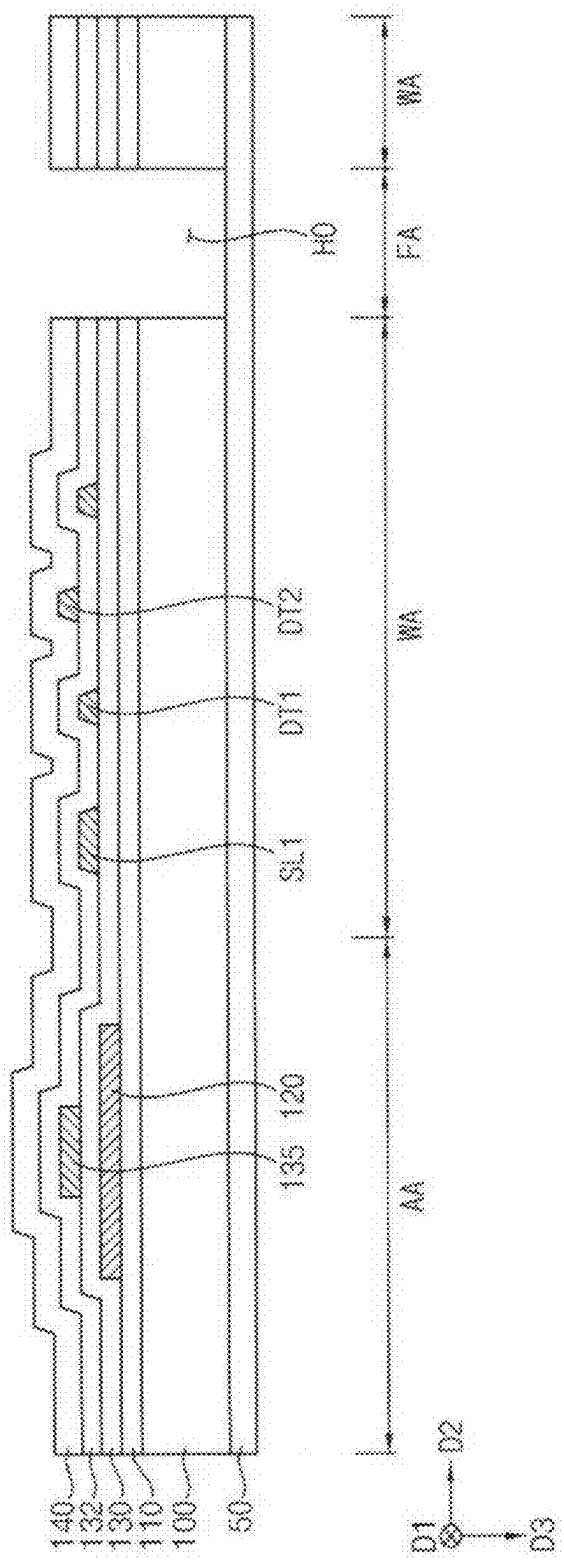

FIG. 16

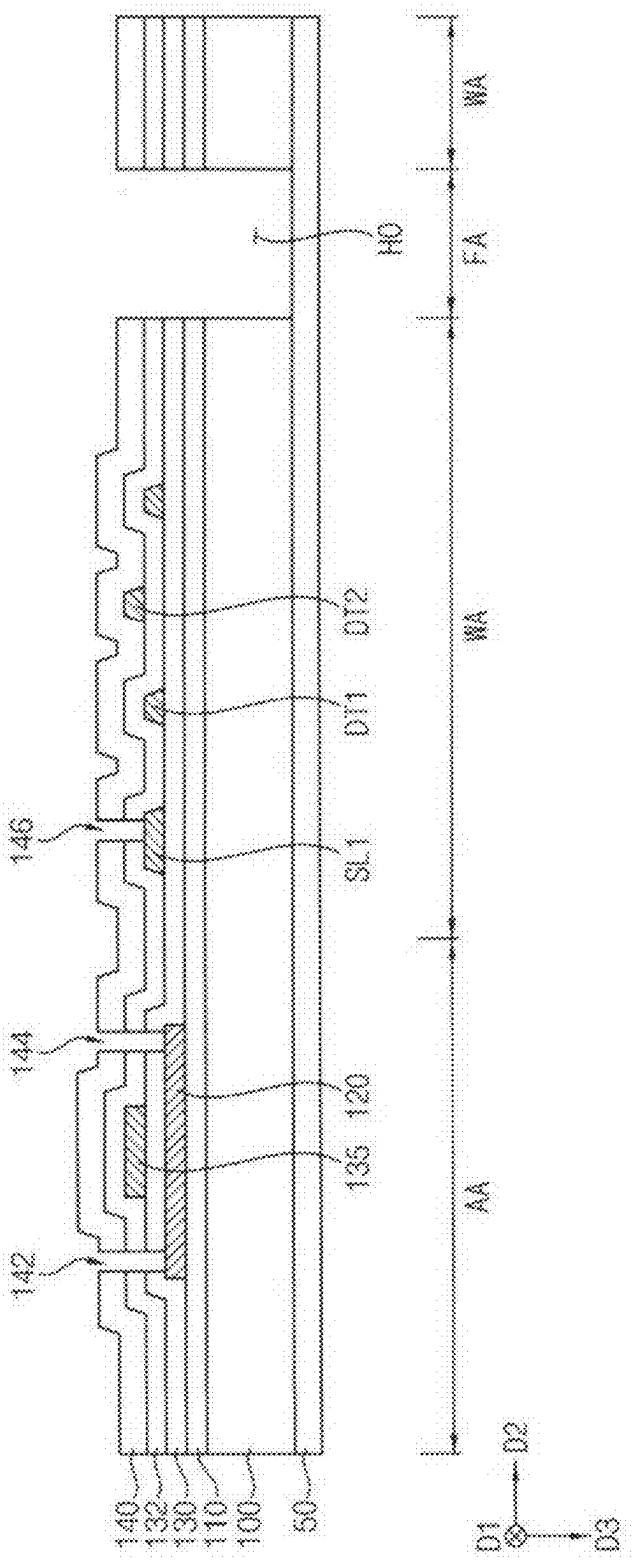
140
132
130
110
100
50
142
144
146
135
120
SL1
DT1
DT2
H0
AA
FA
WA
WA
D1
D2
D3

FIG. 17

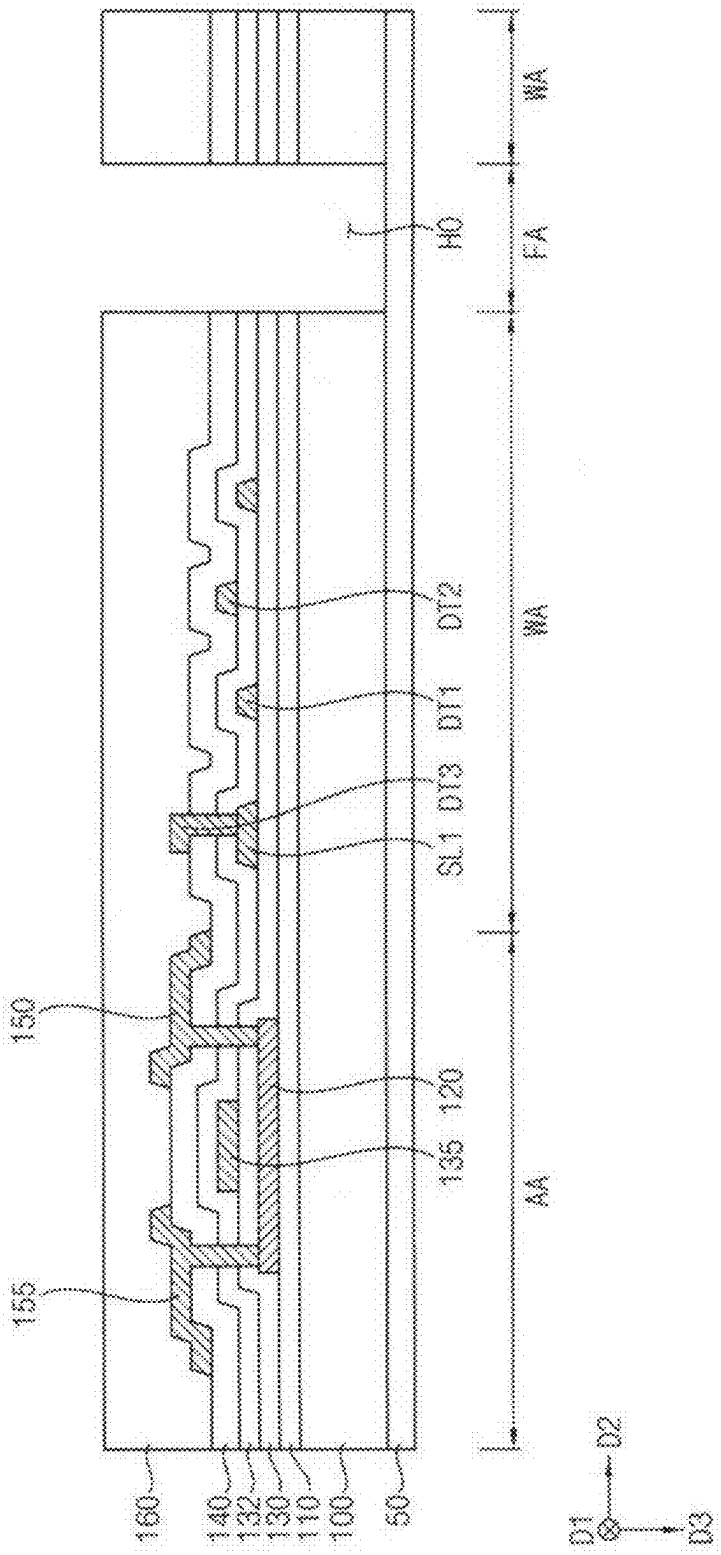
160
140
132
130
110
100
50
155
150
135
120
SL1
DT3
DT1
DT2
T
H0
AA
FA
WA
WA
D1
D2
D3

FIG. 18

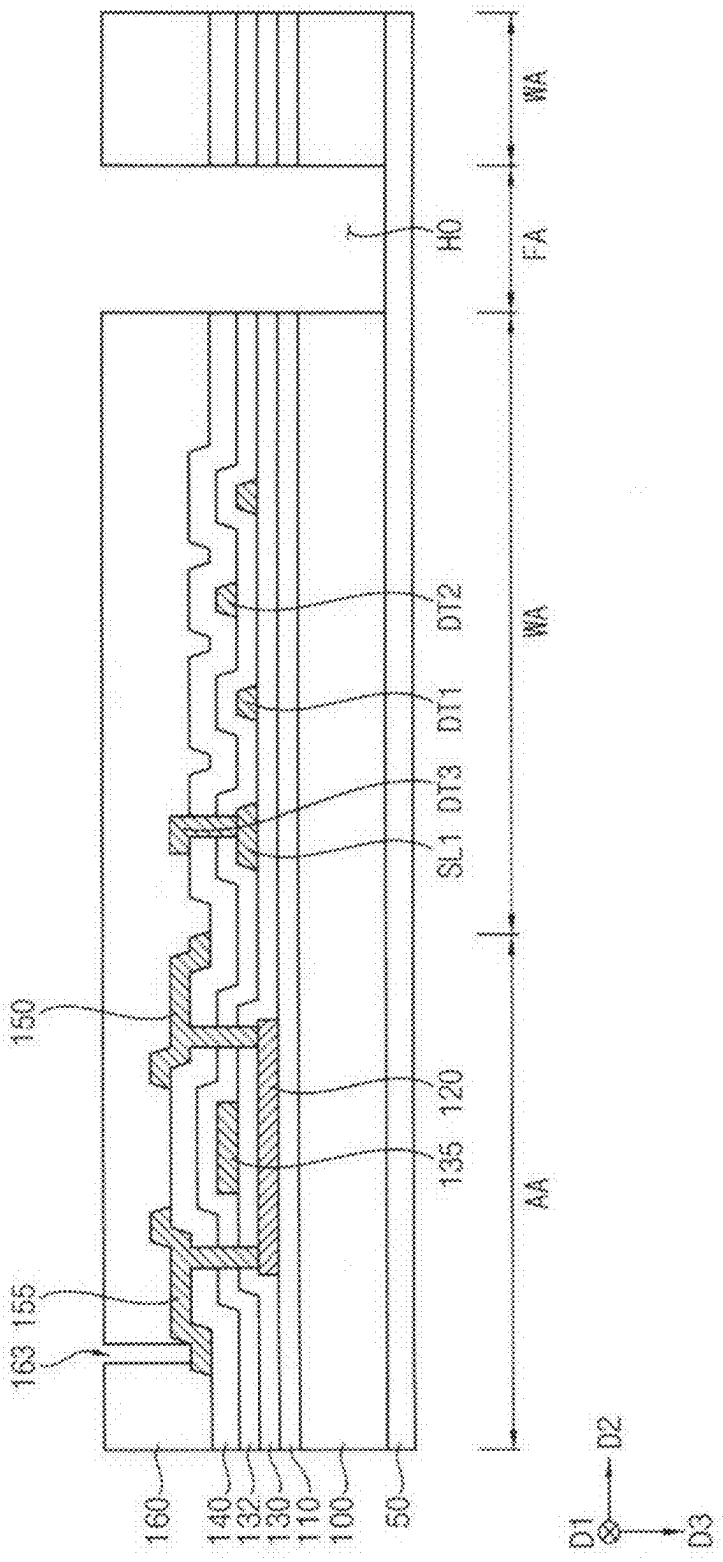
WA
FA
WA
AA
H0
DT2
DT1
DT3
SL1
150
120
135
155
163
160
140
132
130
110
100
50
D1
D2
D3

FIG. 19

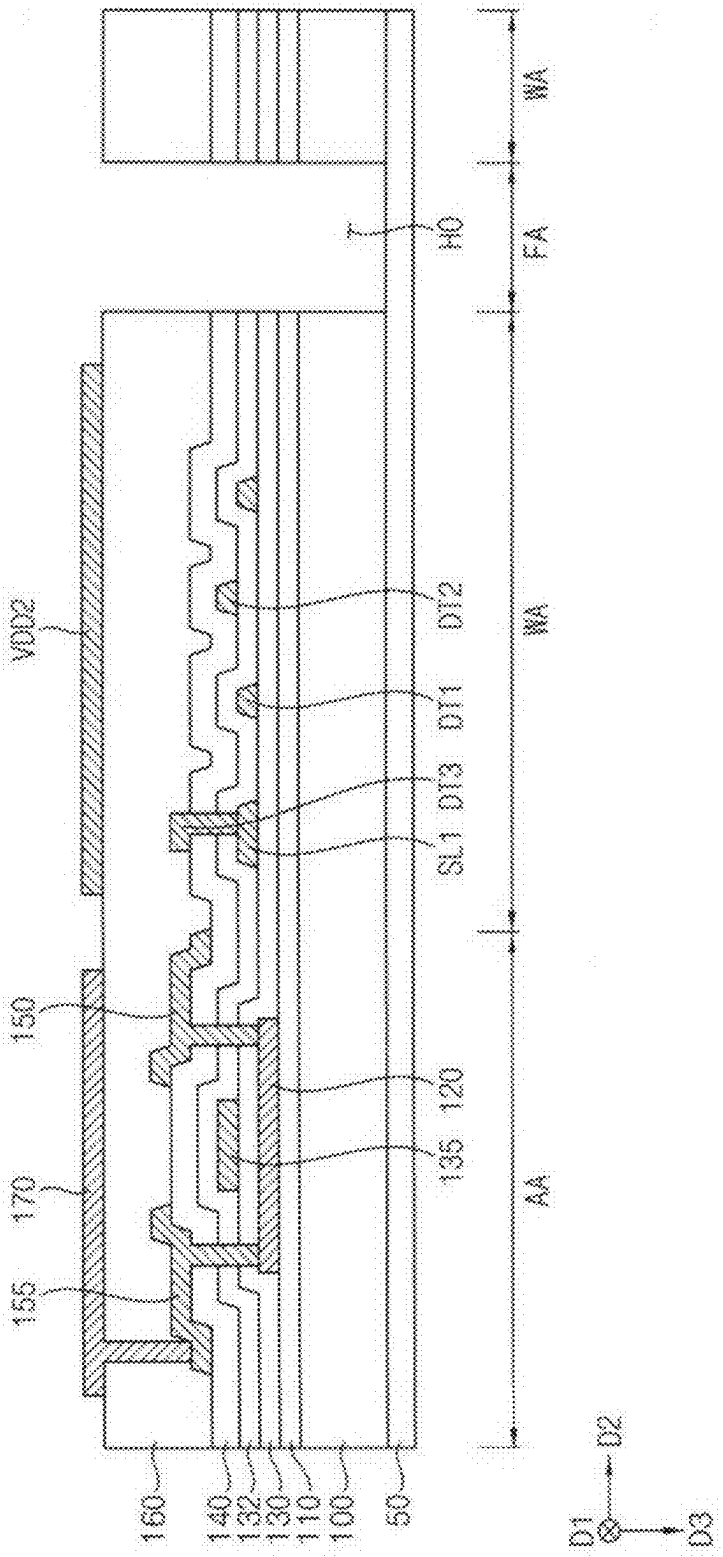
VDD2
150
170
155
160
140
132
130
110
100
50
SL1
DT3
DT1
DT2
135
120
T
H0
AA
WA
FA
WA
D1
D2
D3

FIG. 20

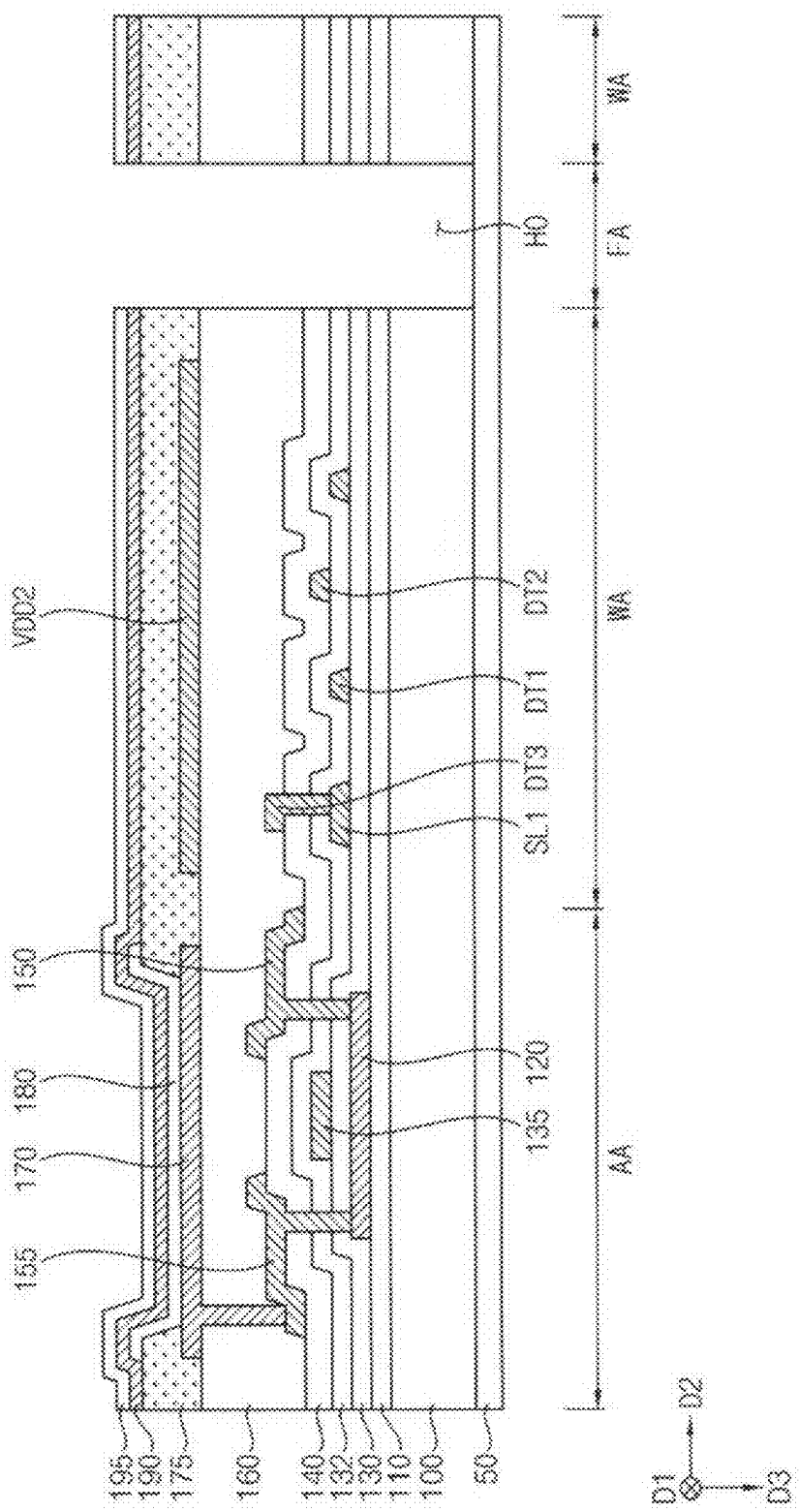
VDD2
150
180
170
155
199
190
175
160
140
132
130
110
100
50
SL1
DT3
DT1
DT2
135
120
T
H0
WA
FA
WA
AA
D1
D2
D3

FIG. 21

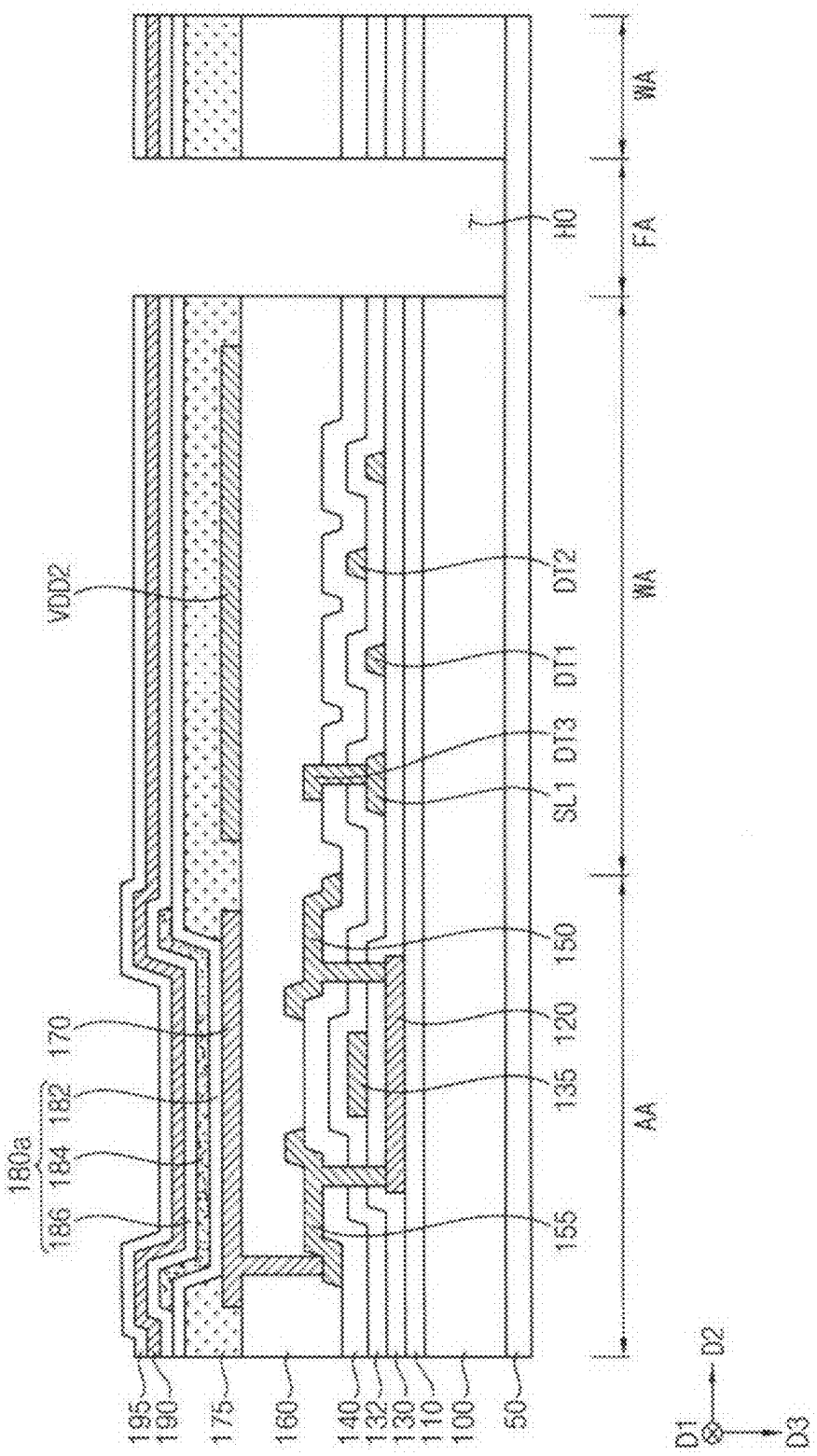
VDD2
170
182
184
186
180a
195
190
175
160
140
132
130
110
100
50
155
135
120
150
SL1
DT3
DT1
DT2
T
IN0
WA
FA
WA
AA
D1
D2
D3

DISPLAY APPARATUS AND METHOD OF MANUFACTURING DISPLAY APPARATUS

CROSS-REFERENCE TO RELATED APPLICATIONS

[0001] This application is a continuation of U.S. patent application Ser. No. 18/654,066 filed on May 3, 2024, which is a continuation of U.S. patent application Ser. No. 18/134,683 filed on Apr. 14, 2023, now U.S. Pat. No. 12,004,397 issued on Jun. 4, 2024, which is a continuation of U.S. patent application Ser. No. 17/090,493 filed on Nov. 5, 2020, now U.S. Pat. No. 11,631,730 issued on Apr. 18, 2023, which is a continuation of U.S. patent application Ser. No. 16/902,342 filed on Jun. 16, 2020, now U.S. Pat. No. 10,854,705 issued on Dec. 1, 2020, which is a continuation of U.S. patent application Ser. No. 16/390,196 filed on Apr. 22, 2019, now U.S. Pat. No. 10,700,155 issued on Jun. 30, 2020, which is a continuation of U.S. patent application Ser. No. 16/184,224 filed on Nov. 8, 2018, now U.S. Pat. No. 10,297,655, which is a continuation of U.S. patent application Ser. No. 15/404,661, filed on Jan. 12, 2017, now U.S. Pat. No. 10,134,826 issued on Nov. 20, 2018, which claims priority under 35 USC § 119 to Korean Patent Application No. 10-2016-0045087 filed on Apr. 12, 2016 in the Korean Intellectual Property Office (KIPO), the disclosures of which are incorporated by reference herein in their entireties.

1. TECHNICAL FIELD

[0002] Exemplary embodiments of the present invention relate to a display apparatus, and more particularly, to a display apparatus and a method of manufacturing the display apparatus.

2. DISCUSSION OF RELATED ART

[0003] A display apparatus may include a display area that emits a light to display an image, and a non-display area. For example, the non-display area may be a peripheral area surrounding the display area.

[0004] In the display apparatus, a size of the peripheral area may be reduced to achieve a relatively narrow bezel of the display apparatus. When the display apparatus having a relatively narrow bezel includes additional devices such as a camera module or a button module an area for the additional devices may penetrate into the display area so that a size of the display area is reduced.

[0005] Non-uniformity of connection wirings in an adjacent area to the additional devices may cause deterioration of a display image.

SUMMARY

[0006] Some exemplary embodiments of the present invention provide a display apparatus having an enlarged display area.

[0007] Some exemplary embodiments of the present invention provide a method for manufacturing a display apparatus having an enlarged display area.

[0008] According to an exemplary embodiment of the present invention, a display apparatus includes a substrate including a display area, a peripheral area surrounding the display area, a function-adding area, of which at least a portion is surrounded by the display area, and a detour area disposed between the display area and the function-adding area. The display apparatus includes a plurality of pixel circuits disposed in the display area. A plurality of driving lines are electrically connected to the pixel circuits and extend in a direction in the display area. A first detour line is disposed in the detour area and is electrically connected to a first driving line. A second detour line is disposed in the detour area. The second detour line is electrically connected to a second driving line and is disposed in a different layer from the first detour line.

[0009] In an exemplary embodiment of the present invention, the first and second detour lines may be adjacent to an edge of the function-adding area in a plan view.

[0010] In an exemplary embodiment of the present invention, the first and second detour lines are may be alternatingly arranged in a second direction crossing the first direction.

[0011] In an exemplary embodiment of the present invention, the driving lines may include data lines.

[0012] In an exemplary embodiment of the present invention, the display apparatus may include a scan line electrically connected to the pixel circuits in the display area and extending in a second direction crossing the first direction, and a third detour line electrically connected to the scan line and disposed in the detour area.

[0013] In an exemplary embodiment of the present invention, the third detour line may be disposed in a different layer from the scan line.

[0014] In an exemplary embodiment of the present invention, the scan line may include a first portion and a second portion spaced apart from the first portion by the detour area. The third detour line may electrically connect the first portion to the second portion.

[0015] In an exemplary embodiment of the present invention, the scan line may be electrically connected to a gate electrode of a switching transistor that receives a data signal through at least one of the data lines.

[0016] In an exemplary embodiment of the present invention, the display apparatus may include a power line electrically connected to the pixel circuits and extending in the first direction in the display area. A power bus line may extend in the second direction in the peripheral area. A detour bus line may be disposed in the detour area and may electrically connect the power line to the power bus line.

[0017] In an exemplary embodiment of the present invention, the detour bus line may be adjacent to the function-adding area in a plan view.

[0018] In an exemplary embodiment of the present invention, the power bus line may include a first portion and a second portion spaced apart from the first portion by the detour area. The detour bus line may electrically connect the first portion to the second portion.

[0019] In an exemplary embodiment of the present invention, the display apparatus may include an insulation structure that covers the pixel circuits and is disposed in the display area and the detour area. The insulation structure may include a gate insulation layer, an interlayer insulation layer and a via insulation layer, which are sequentially disposed above the substrate. Each of the pixel circuits may include an active pattern disposed under the gate insulation layer. A gate electrode may be disposed on the gate insulation layer and may overlap the active pattern. A source electrode may be disposed on the interlayer insulation layer and may be electrically connected to the active pattern. A drain electrode may be spaced apart from the source elec-

trode. A pixel electrode may be disposed on the via insulation layer and may be electrically connected to the drain electrode.

[0020] In an exemplary embodiment of the present invention, the gate insulation layer may include a first gate insulation layer and a second insulation layer disposed on the first gate insulation layer. The first detour line may be disposed on the first gate insulation layer, and the second detour line may be disposed on the second gate insulation layer.

[0021] In an exemplary embodiment of the present invention, the third detour line may be disposed between the interlayer insulation layer and the via insulation layer.

[0022] In an exemplary embodiment of the present invention, the detour bus line may be disposed on the via insulation layer.

[0023] In an exemplary embodiment of the present invention, the first and second detour lines may extend into the peripheral area and may cross the power bus line.

[0024] In an exemplary embodiment of the present invention, the display apparatus may include a power line electrically connected to the pixel circuits and extending in the first direction in the display area. A power bus line may extend in the second direction in the peripheral area. A detour bus line may be disposed in the detour area and may electrically connect the power line to the power bus line. An insulation structure may cover the pixel circuits and may be disposed in the display area and the detour area. The insulation structure may include a gate insulation layer, an interlayer insulation layer and a via insulation layer, which are sequentially disposed above the substrate. The power line, the power bus line and the detour bus line may be disposed between the interlayer insulation layer and the via insulation layer.

[0025] In an exemplary embodiment of the present invention, the function-adding area may be defined by an opening passing through the substrate.

[0026] In an exemplary embodiment of the present invention, the display apparatus may include a light-emitting layer electrically connected to the pixel circuits.

[0027] According to an exemplary embodiment of the present invention, a method for manufacturing a display apparatus is provided. According to the method, a first gate pattern including a first detour line and a scan line is formed on a substrate. A gate insulation layer that covers the first gate pattern is formed. A second gate pattern including a second detour line is formed on the gate insulation layer. An interlayer insulation layer that covers the second gate pattern is formed. A source pattern is formed on the interlayer insulation layer. The source pattern includes a first data line electrically connected to the first detour line, a second data line electrically connected to the second detour line, and a third detour line electrically connected to the scan line and crossing the first detour line and the second detour line. A via insulation layer that covers the source pattern is formed.

[0028] According to an exemplary embodiment of the present invention, the substrate may include a function-adding area defined by an opening passing through the substrate. The first to third detour lines may be adjacent to an edge of the function-adding area in a plan view.

[0029] According to an exemplary embodiment of the present invention, the source pattern may include a power line extending in a same direction as the data lines. A power bus line may extend in a direction crossing the power line and may be electrically connected to the power line.

[0030] According to an exemplary embodiment of the present invention, a detour bus line may be formed on the via insulation layer. The via bus line may electrically connect the power line to the power bus line.

[0031] According the exemplary embodiment of the present invention, a plurality of detour lines that are respectively connected to a plurality of driving lines may be disposed in different layers in a detour area surrounding a function-adding area. Thus, a distance between the detour lines may be reduced and a size of the detour area may be reduced. Thus, a size of a display area may be increased.

[0032] According the exemplary embodiment of the present invention, a scan line may be electrically connected to a detour line disposed in the detour area. Thus, deterioration of display quality may be reduced or prevented.

[0033] According the exemplary embodiment of the present invention, a power line and a power bus line may be connected to each other through a detour bus line disposed in the detour area, which may prevent electrical disconnection, damage or voltage decrease by increased resistance of the power line.

BRIEF DESCRIPTION OF THE DRAWINGS

[0034] A more complete appreciation of the present inventive concept will become more apparent by describing in detail exemplary embodiments thereof with reference to the accompanying drawings, in which:

[0035] FIG. **1** is a plan view illustrating a display substrate according to an exemplary embodiment of the present invention.

[0036] FIG. **2** is an enlarged plan view illustrating the region 'A' of FIG. **1**.

[0037] FIG. **3** is a cross-sectional view taken along the line I-I' of FIG. **2**.

[0038] FIG. **4** is a cross-sectional view taken along the line II-II' of FIG. **2**.

[0039] FIG. **5** is a circuit diagram illustrating a pixel circuit of a display substrate according to an exemplary embodiment.

[0040] FIG. **6** is a plan view illustrating a display substrate according to an exemplary embodiment of the present invention.

[0041] FIG. **7** is an enlarged plan view illustrating the region 'B' of FIG. **6**.

[0042] FIG. **8** is a cross-sectional view taken along the line III-III' of FIG. **7**.

[0043] FIG. **9** is a cross-sectional view taken along the line IV-IV' of FIG. **7**.

[0044] FIG. **10** is a cross-sectional view illustrating a display apparatus according to an exemplary embodiment of the present invention.

[0045] FIG. **11** is a cross-sectional view illustrating a display apparatus according to an exemplary embodiment of the present invention.

[0046] FIGS. **12** to **21** are cross-sectional views illustrating a method for manufacturing a display apparatus according to an exemplary embodiment of the present invention.

DETAILED DESCRIPTION OF THE EMBODIMENTS

[0047] Exemplary embodiments of the present invention will be described in more detail below with reference to the accompanying drawings, in which exemplary embodiments are illustrated. Exemplary embodiments of the present invention may, however, be embodied in many different forms and should not be construed as limited to the embodiments set forth herein. Like reference numerals may refer to like elements throughout the specification and drawings

[0048] FIG. **1** is a plan view illustrating a display substrate according to an exemplary embodiment of the present invention.

[0049] FIG. **2** is an enlarged plan view illustrating the region 'A' of FIG. **1**. FIG. **3** is a cross-sectional view taken along the line I-I' of FIG. **2**. FIG. **4** is a cross-sectional view taken along the line II-II' of FIG. **2**. FIG. **5** is a circuit diagram illustrating a pixel circuit of a display substrate according to an exemplary embodiment of the present invention.

[0050] Referring to FIGS. **1** to **5**, a display substrate may include a base substrate **100**, a pixel circuit, an insulation structure, a pixel electrode **170**, a driving line, and a detour line.

[0051] The base substrate **100** may include a display area AA, a peripheral area PA, a function-adding area FA and a detour area WA.

[0052] The display area AA may be an area where an image is displayed, and a plurality of pixels PX may be arranged in the display area AA. For example, the display area AA may include at least one red pixel, at least one green pixel and at least one blue pixel, which are adjacent to each other and are alternately and sequentially arranged. Each of the pixels PX may include a pixel circuit.

[0053] The peripheral area PA is an area where an image is not displayed, and may be adjacent to the display area AA. For example, the peripheral area PA may have a shape surrounding the display area AA. A driving part that provides a driving signal to each of the pixels PX may be disposed in the peripheral area PA. For example, the driving part may include a data driving part, a scan driving part and a light-emitting driving part. The driving part may be disposed on an IC chip or may be disposed on the base substrate **100**.

[0054] The function-adding area FA may be an area where an image is not displayed, and at least a portion of the function-adding area FA may be surrounded by the display area AA. For example, the function-adding area FA may be a non-display area recessed from a boundary line of the display area AA.

[0055] For example, the function-adding area FA may be defined by an opening HO passing through the base substrate **100**. For example, the opening HO may overlap the display area AA and the peripheral area PA.

[0056] For example, a button module or a cameral module may be positioned in the function-adding area FA.

[0057] The detour area WA may be an area where an image is not displayed, and may be disposed between the function-adding area FA and the display area AA. Wirings for electrically connecting the driving part to the pixels PX may be disposed in the detour area WA.

[0058] In an exemplary embodiment of the present invention, the function-adding area FA may be a button area disposed in a lower portion of the display substrate, but exemplary embodiments of the present invention are not limited thereto. For example, the function-adding area FA may be defined by a camera area CC disposed in an upper portion of the display substrate, and an area surrounding the camera area CC may define the detour area WA.

[0059] In an exemplary embodiment of the present invention, a plurality of data lines DL**1** and DL**2** extending in a first direction D**1**, and a plurality of scan lines SL**1** extending in a second direction D**2** crossing the first direction D**1** may be disposed in the display area AA.

[0060] A transistor such as a thin film transistor, which is included in the pixel circuit, may be disposed in each of the pixels PX. The thin film transistor may be electrically connected to a corresponding data line and a corresponding gate line.

[0061] The pixel circuit may be electrically connected to a power line VDD**1**. The power line VDD**1** may be parallel to the data lines DL**1** and DL**2**.

[0062] The data lines (e.g., data lines DL**1** and DL**2**) and the power lines (e.g., power line VDD**1**) may be referred to as driving lines.

[0063] One transistor may be disposed in each of the pixels PX; however, exemplary embodiments of the present invention are not limited thereto. For example, at least two transistors may be disposed in each of the pixels PX. For example, each of the pixels PX may include a plurality of transistors including a switching transistor SW, and a storage capacitor Cst.

[0064] The pixel circuit may be electrically connected to a gate-writing line GW, a voltage-initializing line Vint, a gate-initializing line GI, a first power line VDD**1**, a second power line and an emission control line EM. The gate-writing line GW may be connected to a gate electrode of the switching transistor SW connected to the data line. The voltage-initializing line Vint may provide an initializing voltage. The gate-initializing line GI may control a transistor connected to the voltage-initializing line Vint. The first power line VDD**1** may provide a first power voltage ELVDD to an organic light-emitting diode OLED. The second power lines may provide a second power voltage ELVSS to the organic light-emitting diode OLED. The emission control line EM may provide an emission signal to the organic light-emitting diode OLED. The organic light-emitting diode OLED may include a pixel electrode, a light-emitting layer and an opposing electrode.

[0065] In an exemplary embodiment of the present invention, a first detour line DT**1** and a second detour line DT**2** may be disposed in the detour area WA. The first detour line DT**1** and the second detour line DT**2** may be disposed in different layers. The first detour line DT**1** may be electrically connected to a first driving line disposed in the display area AA. The second detour line DT**2** may be electrically connected to a second driving line disposed in the display area AA.

[0066] In an exemplary embodiment of the present invention, the detour area WA may have a ring shape or a half ring shape, which surrounds the function-adding area FA. The first detour line DT**1** and the second detour line DT**2** may extend along an edge of the function-adding area FA. For example, the first detour line DT**1** and the second detour line DT**2** may have a shape that curves or bends along the edge of the function-adding area FA in a plan view.

[0067] The first detour line DT**1** and the second detour line DT**2** may have different lengths. For example, when the

second detour line DT**2** is closer to the function-adding area FA than the first detour line DT**1** is, a length of the first detour line DT**1** may be longer than a length of the second detour line DT**2**.

[0068] When the first detour line DT**1** and the second detour line DT**2** are disposed in a same layer, the first detour line DT**1** and the second detour line DT**2** may be relatively close together. For example, the first detour line DT**1** and the second detour line DT**2** may be relatively close together as a result of an exposure process. In an exemplary embodiment of the present invention, the first detour line DT**1** and the second detour line DT**2** may be disposed in different layers from each other. The first detour line DT**1** and the second detour line DT**2** may be alternatingly arranged along the second direction D**2**. Thus, a distance between the first detour line DT**1** and the second detour line DT**2** disposed on different layers from each other may be reduced. For example, the distance between the first detour line DT**1** and the second detour line DT**2** according to an exemplary embodiment of the present invention may be less than a distance between a first detour line and a second detour line formed by an exposure process forming the first and second detour lines on a same level. Thus, a size of the detour area WA, which is a non-display area, may be reduced when first detour line DT**1** and the second detour line DT**2** are disposed in different layers.

[0069] In an exemplary embodiment of the present invention, a third detour line DT**3** may be disposed in the detour area WA. The third detour line DT**3** may be electrically connected to the scan line SL**1** that extends in the second direction D**2** in the display area AA. The scan line SL**1** may include a first portion and a second portion spaced apart from the first portion by the function-adding area FA. The third detour line DT**3** may be connected to the first portion and the second portion. The third detour line DT**3** may be disposed in a different layer from the first and second detour lines DT**1** and DT**2** (see, e.g., FIG. **4**), and may cross the first and second detour lines DT**1** and DT**2**.

[0070] For example, the third detour line DT**3** may extend along the edge of the function-adding area FA. For example, the third detour line DT**3** may have a shape that curves or bends along the edge of the function-adding area FA in a plan view.

[0071] When the scan line SL**1** is divided by the function-adding area FA, the divided first and second portions may be connected to gate driving parts disposed at both sides of the peripheral area PA to be operated.

[0072] However, when the scan line SL**1** is divided by the function-adding area FA, or when the divided first and second portions have different lengths from each other, voltage variation of signals applied to the pixel circuits may be increased by RC difference between the divided scan line and other scan lines that are not divided. Thus, a displayed image may be deteriorated.

[0073] For example, the scan line SL**1** may include a line that extends in the second direction D**2** in the display area AA, for example, at least one of the gate-writing line GW, the voltage-initializing line Vint, the gate-initializing line GI and the emission control line EM.

[0074] In an exemplary embodiment of the present invention, the scan line SL**1** may be the gate-writing line GW. A voltage variation occurring between divided portions of the gate-writing line GW may affect image quality. Thus, when the gate-writing line GW is continuously connected by the third detour line DT**3**, and when other lines, for example, the voltage-initializing line Vint, the gate-initializing line GI and the emission control line EM are respectively divided into a plurality of portions that are separately driven, the number of detour lines disposed in the detour area WA may be reduced. Thus, image deterioration may be reduced or prevented and a size of the detour area WA may be reduced.

[0075] In an exemplary embodiment of the present invention, a detour bus line VDD**2** may be disposed in the detour area WA. A power bus line ELVDD may be disposed in the peripheral area PA. The detour bus line VDD**2** may be electrically connected to the power bus line ELVDD disposed in the peripheral area PA. The detour bus line VDD**2** and the power bus line ELVDD may have a width greater than the power line VDD**1**.

[0076] In an exemplary embodiment of the present invention, the power bus line ELVDD may extend in the second direction D**2**, and may include a first portion and a second portion spaced apart from the first portion by the function-adding area FA. The detour bus line VDD**2** may be connected to the first portion and the second portion of the power bus line ELVDD.

[0077] For example, the detour bus line VDD**2** may extends along the edge of the function-adding area FA. For example, the detour bus line VDD**2** may have a shape that curves or bends along the edge of the function-adding area FA. The detour bus line VDD**2** may overlap the first to third detour lines DT**1**, DT**2** and DT**3** in the detour area WA, and may be disposed in a different layer from the first to third detour lines DT**1**, DT**2** and DT**3**.

[0078] When the power lines VDD**1** adjacent to the function-adding area FA are not directly connected to the power bus line ELVDD or the detour bus line VDD**2**, the power lines VDD**1** may be connected to adjacent power lines with a mesh structure, and thus a between the power lines VDD**1** and the power bus line ELVDD may be increased. Thus, disconnection or damage may be caused by burning due to increased resistance, or voltage variation applied to the pixel circuits may be increased.

[0079] In an exemplary embodiment of the present invention, the detour bus line VDD**2** may be connected to the power lines VDD**1** adjacent to the function-adding area FA. Thus, a power may be stably applied to the power lines VDD**1**.

[0080] In an exemplary embodiment of the present invention, the first and second detour lines DT**1** and DT**2** may extend into the peripheral area PA and may cross the power bus line ELVDD.

[0081] The transistor and the capacitor may be disposed on a barrier layer **110** formed on the base substrate **100** in the display area AA. The transistor may include an active pattern **120**, a gate electrode **135**, a source electrode **150** and a drain electrode **155**. The transistor may be a driving transistor that provides a driving power to a light-emitting element.

[0082] A via insulation layer **160** may cover the transistor. For example, a pixel electrode **170** electrically connected to the drain electrode **155** of the transistor may be disposed on the via insulation layer **160**.

[0083] The base substrate **100** may be an insulation substrate. For example, the base substrate **100** may include a polymeric material. For example, the base substrate **100** may include a polymer such as polyimide, polysiloxane, epoxy

resin, acrylic resin, or polyester. In an exemplary embodiment of the present invention, the base substrate **100** may include polyimide.

[0084] As an example, the base substrate **100** may be a glass substrate or a quartz substrate.

[0085] The barrier layer **110** may be conformally disposed along an upper surface of the base substrate **100**. The barrier layer **110** may reduce or prevent an entrance of humidity into the display substrate, and may reduce or prevent a diffusion of impurities between the base substrate **100** and a structure formed on the base substrate **100**.

[0086] For example, the barrier layer **110** may be disposed in the display area AA and the detour area WA of the base substrate **100**.

[0087] The barrier layer **110** may include silicon oxide, silicon nitride or silicon oxynitride, or a combination thereof. The barrier layer **110** may have a stacked structure including a silicon oxide layer and a silicon nitride layer.

[0088] The active pattern **120** may be disposed on the barrier layer **110**. The active pattern **120** may include a silicon compound such as polysilicon. In an exemplary embodiment of the present invention, a source region and a drain region, which include impurities of p-type or n-type, may be disposed at opposite ends of the active pattern **120**.

[0089] In an exemplary embodiment of the present invention, the active pattern **120** may include an semiconductive oxide such as indium gallium zinc oxide (IGZO), zinc tin oxide (ZTO), or indium tin zinc oxide (ITZO).

[0090] A first gate insulation layer **130** and a second gate insulation layer **132** may be disposed on the barrier layer **110**. The first gate insulation layer **130** and the second gate insulation layer **132** may cover the active pattern **120**. In an exemplary embodiment of the present invention, the first and second gate insulation layers **130** and **132** may include silicon oxide, silicon nitride or silicon oxynitride. In an exemplary embodiment of the present invention, the first gate insulation layer **130** may include a silicon oxide layer, and the second gate insulation layer **132** may include a silicon nitride layer.

[0091] The first and second gate insulation layers **130** and **132** may be disposed in the display area AA and the detour area WA.

[0092] The gate electrode **135** may be disposed on the first gate insulation layer **130**. The gate electrode **135** may be disposed between the first gate insulation layer **130** and the second gate insulation layer **132**, and may substantially overlap the active pattern **120**.

[0093] For example, the gate electrode **135** may include a metal such as aluminum (Al), silver (Ag), tungsten (W), copper (Cu), nickel (Ni), chrome (Cr), molybdenum (Mo), titanium (Ti), platinum (Pt), tantalum (Ta), neodymium (Nd) or scandium (Sc), an alloy thereof, a nitride thereof, or a combination thereof. The gate electrode **135** may have a stacked structure including at least two metal layers that are physically or chemically different from each other. For example, the gate electrode **135** may have a stacked structure of Al/Mo or Ti/Cu, which may reduce an electrical resistance of the gate electrode **135**.

[0094] The gate electrode **135** may be formed from a same layer as the scan line SL**1**. Thus, the scan line SL**1** may be disposed between the first gate insulation layer **130** and the second gate insulation layer **132**.

[0095] In an exemplary embodiment of the present invention, a storage electrode including a storage capacitor Cst may be disposed between the second gate insulation layer **132** and an interlayer insulation layer **140**.

[0096] The interlayer insulation layer **140** may be disposed on the second gate insulation layer **132** and may cover the gate electrode **135**. The interlayer insulation layer **140** may include silicon oxide, silicon nitride or silicon oxynitride. In an exemplary embodiment of the present invention, the interlayer insulation layer **140** may have a stacked structure including a silicon oxide layer and a silicon nitride layer.

[0097] The interlayer insulation layer **140** may be disposed in the display area AA and the detour area WA.

[0098] The source electrode **150** and the drain electrode **155** may pass through the interlayer insulation layer **140** and the first and second gate insulation layers **130** and **132** to contact the active pattern **120**. As an example, the source electrode **150** and the drain electrode **155** may include a metal such as aluminum (Al), silver (Ag), tungsten (W), copper (Cu), nickel (Ni), chrome (Cr), molybdenum (Mo), titanium (Ti), platinum (Pt), tantalum (Ta), neodymium (Nd) or scandium (Sc), an alloy thereof, a nitride thereof, or a combination thereof. For example, the source electrode **150** and the drain electrode **155** may have a stacked structure including at least two metal layers that are physically or chemically different from each other, such as Al/Mo.

[0099] The source electrode **150** and the drain electrode **155** may respectively contact the source region and the drain region of the active pattern **120**. A region between the source region and the drain region may be a channel through which an electron moves.

[0100] The data lines DL**1** and DL**2** may be formed from a same layer as the source electrode **150** and the drain electrode **155**. Thus, the data lines DL**1** and DL**2** may be disposed between the interlayer insulation layer **140** and the via insulation layer **160**.

[0101] The power line VDD**1** and the power bus line ELVDD may be formed from a same layer as the source electrode **150** and the drain electrode **155**. Thus, the power line VDD**1** and the power bus line ELVDD may be disposed between the interlayer insulation layer **140** and the via insulation layer **160**.

[0102] While a transistor having a top-gate structure in which the gate electrode **135** is disposed on the active pattern **120** is illustrated in FIG. **3**, exemplary embodiments of the present invention are not limited thereto. For example, the transistor may have a bottom-gate structure in which the gate electrode **135** is disposed under the active pattern **120**.

[0103] The via insulation layer **160** may be disposed on the interlayer insulation layer **140** and may cover the source electrode **150** and the drain electrode **155**. The via insulation layer **160** may include a through hole electrically connecting the pixel electrode **170** and the drain electrode **155**. The via insulation layer **160** may function as a flattening layer for the display substrate.

[0104] As an example, the via insulation layer **160** may include an organic material such as polyimide, phenol resin, epoxy resin, acrylic resin, or polyester.

[0105] The pixel electrode **170** may be disposed on the via insulation layer **160**, and may contact the drain electrode **155** through the via insulation layer **160**. The pixel electrode **170** may be disposed in the display area AA, and may be independently disposed in each of the pixels PX.

[0106] For example, the pixel electrode **170** may include indium tin oxide, indium zinc oxide, zinc oxide, or indium oxide.

[0107] In an exemplary embodiment of the present invention, the pixel electrode **170** may be a reflective electrode. When the pixel electrode **170** is a reflective electrode, the pixel electrode **170** may include a metal such as aluminum (Al), silver (Ag), tungsten (W), copper (Cu), nickel (Ni), chrome (Cr), molybdenum (Mo), titanium (Ti), platinum (Pt), tantalum (Ta), neodymium (Nd) or scandium (Sc), or an alloy thereof.

[0108] In an exemplary embodiment of the present invention, the pixel electrode **170** may have a stacked structure including a transparent conductive material and a metal.

[0109] The insulation structure may include the first and gate insulation layers **130** and **132**, the interlayer insulation layer **140** and the via insulation layer **160**.

[0110] The first detour line DT**1** may be disposed in a different layer from the second detour line DT**2**. For example, the first detour line DT**1** may be disposed in a same layer as the scan line SL**1** or the gate electrode **135**. Thus, the first detour line DT**1** may be disposed between the first gate insulation layer **130** and the second gate insulation layer **132**.

[0111] As an example, the second detour line DT**2** may be disposed between the second gate insulation layer **132** and the via insulation layer **140**.

[0112] The first detour line DT**1** may be electrically connected to the first data line DL**1**. For example, an end of the first data line DL**1** may overlap an end of the first detour line DT**1**, and the end of the first data line DL**1** may pass through the interlayer insulation layer **140** and the second gate insulation layer **132** to contact the end of the first detour line DT**1**.

[0113] The second detour line DT**2** may be electrically connected to the second data line DL**2**. For example, an end of the second data line DL**2** may overlap an end of the second detour line DT**2**, and the end of the second data line DL**2** may pass through the via insulation layer **140** to contact the end of the second detour line DT**2**.

[0114] The third detour line DT**3** may be disposed in a different layer from the first and second detour lines DT**1** and DT**2**. For example, the third detour line DT**3** may be disposed in a same layer as the data lines DL**1** and DL**2**. Thus, the third detour line DT**3** may be disposed between the interlayer insulation layer **140** and the via insulation layer **160**.

[0115] The third detour line DT**3** may be electrically connected to the scan line SL**1**. For example, an end of the third detour line DT**3** may overlap an end of the scan line SL**1**, and the end of the third detour line DT**3** may pass through the interlayer insulation layer **140** and the second gate insulation layer **132** to contact the end of the scan line SL**1**.

[0116] The detour bus line VDD**2** may be disposed in a different layer from the first to third detour lines DT**1**, DT**2** and DT**3**. For example, the detour bus line VDD**2** may be disposed in a same layer as the pixel electrode **170**. Thus, the detour bus line VDD**2** may be disposed on the via insulation layer **160**.

[0117] An end of the detour bus line VDD**2** may pass through the via insulation layer **160** to contact an end of the power line VDD**1**. The detour bus line VDD**2** may be electrically connected to the power line VDD**1**.

[0118] FIG. **6** is a plan view illustrating a display substrate according to an exemplary embodiment of the present invention. FIG. **7** is an enlarged plan view illustrating the region 'B' of FIG. **6**. FIG. **8** is a cross-sectional view taken along the line III-III' of FIG. **7**. FIG. **9** is a cross-sectional view taken along the line IV-IV' of FIG. **7**. Any repeated explanation for elements that are the same as or similar to those described in more detail with reference to FIGS. **1** to **5** may be omitted.

[0119] Referring to FIGS. **6** to **9**, a display substrate may include a driving line electrically connected to a pixel circuit in the display area AA, and a detour line that passes through an insulation structure to be electrically connected to the driving line.

[0120] For example, the driving line may be disposed in the display area AA, and may be disposed on the interlayer insulation layer **140** of the insulation structure. The detour line may be disposed in the detour area WA, and may be disposed on the first gate insulation layer **130** or the second gate insulation layer **132** of the insulation structure. In an exemplary embodiment of the present invention, the detour line may have a shape extending along an end of a function-adding area FA defined by the opening HO.

[0121] In an exemplary embodiment of the present invention, the driving line may include the plurality of data lines DL**1** and DL**2** that extend in the first direction D**1**. The first detour line DT**1** may be electrically connected to the first data line DL**1**, and the second detour line DT**2** may be electrically connected to the second data line DL**2**. The first detour line DT**1** and the second detour line DT**2** may be disposed in different layers from each other. For example, the first detour line DT**1** and the second detour line DT**2** may be alternatingly arranged in a direction (e.g., the second direction D**2**).

[0122] The first detour line DT**1** may be disposed in a different layer from the second detour line DT**2**. For example, the first detour line DT**1** may be disposed in a same layer as the scan line SL**1** or the gate electrode **135**. Thus, the first detour line DT**1** may be disposed between the first gate insulation layer **130** and the second gate insulation layer **132**.

[0123] For example, the second detour line DT**2** may be disposed between the second gate insulation layer **132** and the interlayer insulation layer **140**.

[0124] In an exemplary embodiment of the present invention, the display substrate might not include the third detour line electrically connecting divided portions of the scan line SL**1** to each other. The divided portions of the scan line SL**1** may be driven by scan driving parts disposed at both sides of the peripheral area PA. Omitting the detour line that connects the scan line SL**1** may reduce a size of the detour area WA.

[0125] In the peripheral area PA that surrounds the display area AA, the power bus line ELVDD extending in the second direction D**2** crossing the first direction D**1** may be disposed. The detour bus line VDD**2** that extends along an end of the function-adding area FA and is connected to the power bus line ELVDD and the power line VDD**1** may be disposed in the detour area WA.

[0126] In an exemplary embodiment of the present invention, the display substrate might not include the detour line connecting divided portions of the scan line SL**1**to each other. Thus, the detour bus line VDD**2** may be formed from a source pattern. Thus, the power bus line ELVDD, the

detour bus line VDD**2** and the power line VDD**1** may be formed from a same layer, and may be continuously connected to each other in a same layer.

[0127] FIG. **10** is a cross-sectional view illustrating a display apparatus according to an exemplary embodiment of the present invention. For example, FIG. **10** illustrates an organic light-emitting display apparatus including the display substrate described in more detail above with reference to FIGS. **1** to **5**.

[0128] Any repeated explanation for elements that are the same as or similar to those described in more detail with reference to FIGS. **1** to **5** may be omitted.

[0129] Referring to FIG. **10**, the display apparatus may include a light-emitting layer **180**, an opposing electrode **190** and an encapsulation layer **195**, which may be disposed on the display substrate described in more detail with reference to FIGS. **1-5**. A pixel-defining layer **175** may be disposed on the via insulation layer **160** in the display area AA. The pixel-defining layer **175** may expose at least a portion of the pixel electrode **170** disposed in each of pixels.

[0130] For example, the pixel-defining layer **175** may cover a peripheral portion of the pixel electrode **170**. The pixel-defining layer **175** may include a transparent organic material such as polyimide resin, or acrylic resin. A size of the portion of the pixel electrode **170** not covered by the pixel-defining layer **175** may define a size of a light-emitting area for each pixel.

[0131] The light-emitting layer **180** may be disposed on the pixel-defining layer **175** and the pixel electrode **170**. The light-emitting layer **180** may include an organic light-emitting layer that is individually patterned for a red pixel, a green pixel and a blue pixel to generate light having different colors. The organic light-emitting layer may include a host material, which is excited by an electron and a hole, and a dopant material, which increases a light-emitting efficiency by absorbing and emitting energy.

[0132] In an exemplary embodiment of the present invention, the display apparatus may include a liquid crystal layer instead of the light-emitting layer **180** and thus the display apparatus may be included in a liquid crystal display.

[0133] Referring to FIG. **10**, the light-emitting layer **180** may be disposed on an upper surface of the pixel electrode **170**, which is exposed by an opening of the pixel-defining layer **175**, and on a side surface of the pixel-defining layer **175**. The light-emitting layer **180** may be disposed on an upper surface of the pixel-defining layer **175**. In an exemplary embodiment of the present invention, the light-emitting layer **180** may be divided by a sidewall of the pixel-defining layer **175** and may be disposed on each of the pixels.

[0134] The opposing electrode **190** may be disposed on the light-emitting layer **180**. The opposing electrode **190** and the pixel electrode **170** may face each other through the light-emitting layer **180** disposed between the opposing electrode **190** and the pixel electrode **170**.

[0135] In an exemplary embodiment of the present invention, the opposing electrode **190** may be a common electrode that continuously extends over a plurality of the pixels. The pixel electrode **170** and the opposing electrode **190** may respectively be an anode and a cathode of the display apparatus, or vice versa.

[0136] As an example, the opposing electrode **190** may include a metal having a low work function such as aluminum (Al), silver (Ag), tungsten (W), copper (Cu), nickel (Ni), chrome (Cr), molybdenum (Mo), titanium (Ti), platinum (Pt), tantalum (Ta), neodymium (Nd) or scandium (Sc), magnesium (Mg), or an alloy thereof. The opposing electrode **190** may include a transparent conductive material such as indium tin oxide, indium zinc oxide, zinc oxide, or indium oxide.

[0137] In an exemplary embodiment of the present invention, the opposing electrode **190** may be disposed in the display area AA and the detour area WA. For example, the opposing electrode **190** may be conformally disposed along surfaces of the pixel-defining layer **175** and the light-emitting layer **180**.

[0138] In an exemplary embodiment of the present invention, the display apparatus may be a top-emission type display apparatus displaying an image upwardly through the opposing electrode **190**. In the top-emission type display apparatus, the pixel electrode **170** may include a metal and the pixel electrode **170** may be a reflective electrode. The opposing electrode **190** may include a transparent conductive material such as indium tin oxide.

[0139] The encapsulation layer **195** may be disposed on the opposing electrode **190** and may protect the display apparatus. As an example, the encapsulation layer **195** may include an inorganic material such as silicon oxide and/or a metal oxide. In an exemplary embodiment of the present invention, a capping layer may be disposed between the opposing electrode **190** and the encapsulation layer **195**. The capping layer may include an organic material such as polyimide resin, epoxy resin, or acrylic resin, or an inorganic material such as silicon oxide, silicon nitride, or silicon oxynitride.

[0140] FIG. **11** is a cross-sectional view illustrating a display apparatus according to an exemplary embodiment of the present invention. Any repeated explanation for elements that are the same as or similar to those described in more detail with reference to FIG. **10** may be omitted.

[0141] Referring to FIG. **11**, a light-emitting layer **180***a* may include a hole transport layer (HTL) **182**, an organic light-emitting layer **184** and an electron transport layer (ETL) **186**, which are sequentially disposed from an upper surface of the pixel electrode **170**.

[0142] In an exemplary embodiment of the present invention, the hole transport layer **182** and the electron transport layer **186** may be disposed in the display area AA and the detour area WA. For example, the hole transport layer **182** and the electron transport layer **186** may be conformally disposed along surfaces of the pixel-defining layer **175** and the light-emitting layer **180**.

[0143] As an example, the hole transport layer **182** may include a hole transport material such as 4,4'-bis [N-(1-naphthyl)-N-phenylamino]biphenyl (NPB), 4,4'-bis [N-(3-methylphenyl)-N-phenylamino]biphenyl (TPB), N,N-di-1-naphthyl-N,N-diphenyl-1,1-biphenyl-4,4-diamine (NPD), or N-phenylcarbazole, polyvinylcarbazole.

[0144] As an example, the electron transport layer **186** may include an electron transport material such as tris(8-quinolinolato)aluminum (Alq3), 2-(4-biphenylyl)-5-(4-tert-butylphenyl-1,3,4-oxydiazole (PBD), bis(2-methyl-8-quinolinolato)-4-phenylphenolato-aluminum (BAlq), bathocuproine (BCP), triazole (TAZ), or phnylquinozaline.

[0145] In an exemplary embodiment of the present invention, the hole transport layer **182** and the electron transport layer **186** may be commonly provided for a plurality of the pixels in the display area AA.

[0146] The organic light-emitting layer **184** may be selectively formed in the display area AA. For example, the organic light-emitting layer **184** may substantially overlap the pixel electrode **170**, and may be individually patterned for each of the pixels. The organic light-emitting layer **184** may be disposed between the hole transport layer **182** and the electron transport layer **186** in the display area AA.

[0147] The opposing electrode **190** and the encapsulation layer **195** may be continuously formed in the display area AA and the detour area WA.

[0148] FIGS. **12** to **21** are cross-sectional views illustrating a method for manufacturing a display apparatus according to an exemplary embodiment of the present invention.

[0149] Referring to FIG. **12**, the base substrate **100** may be formed on a carrier substrate **50**.

[0150] The carrier substrate **50** may support the base substrate **100** in the process of manufacturing the display apparatus. For example, the carrier substrate **50** may be a glass substrate or a metal substrate.

[0151] The base substrate **100** may include a polymeric resin such as polyimide. For example, a composition including a polyimide precursor may be coated on the carrier substrate **50** through spin-coating to form a coating layer. The coating layer may be cured by heat to form the base substrate **100**.

[0152] In an exemplary embodiment of the present invention, the base substrate **100** may be a glass substrate or a quartz substrate.

[0153] The base substrate **100** may include the opening HO for adding function. A portion of the base substrate **100** may define the display area AA. A remaining portion of the base substrate **100** except for the opening HO and the display area AA may define the peripheral area PA and the detour area WA.

[0154] The following processes may be performed with the base substrate **100** including the opening HO; however, exemplary embodiments of the present invention are not limited thereto. For example, the opening HO may be formed through patterning or punching, after the display apparatus is manufactured.

[0155] Referring to FIG. **13**, the barrier layer **110**, the active pattern **120** and the first gate insulation layer **130** may be sequentially formed on the base substrate **100**.

[0156] The barrier layer **110** may substantially entirely cover an upper surface of the base substrate **100**. For example, the barrier layer **110** may include silicon oxide, silicon nitride, or silicon oxynitride.

[0157] The active pattern **120** may be formed on the barrier layer **110** in the display area AA. For example, a semiconductor layer including amorphous silicon or polysilicon may be formed on the barrier layer **110**, and then patterned to form the active pattern **120**.

[0158] In an exemplary embodiment of the present invention, after the semiconductor layer is formed, a low temperature polycrystalline silicon (LTPS) process or a laser annealing process may be performed to crystallize silicon.

[0159] In an exemplary embodiment of the present invention, the semiconductor layer may include a semiconductive oxide such as IGZO, ZTP, or ITZO.

[0160] The first gate insulation layer **130** may be formed on the barrier layer **110** and may cover the active pattern **120**. The first gate insulation layer **130** may be continuously formed in the display area AA and the detour area WA. The first gate insulation layer **130** may include silicon oxide, silicon nitride, or silicon oxynitride.

[0161] Referring to FIG. **14**, a first gate pattern including the first detour line DT**1**, the gate electrode **135** and the scan line SL**1** may be formed on the first gate insulation layer **130**.

[0162] For example, a first gate metal layer may be formed on the first gate insulation layer **130**. The first gate metal layer may be patterned through a photolithography to form the first gate pattern. The first detour line DT**1** may be disposed in the detour area WA. The gate electrode **135** and the scan line SL**1** may be disposed in the display area AA.

[0163] The first gate metal layer may include a metal, a metal alloy, or a metal nitride. The first gate metal layer may include stacked metal layers.

[0164] Referring to FIG. **15**, the second gate insulation layer **132** may be formed to cover the first detour line DT**1**, the gate electrode **135** and the scan line SL**1**. A second gate pattern including the second detour line DT**2** may be formed on the second gate insulation layer **132**. The interlayer insulation layer **140** may be formed to cover the second detour line DT**2**.

[0165] The second gate insulation layer **132** may extend continuously in the display area AA and the detour area WA. The interlayer insulation layer **140** may include silicon oxide, silicon nitride, or silicon oxynitride.

[0166] As an example, a second gate metal layer may be formed on the second gate insulation layer **132**. The second gate metal layer may be patterned by a photolithography process to form the second gate pattern including the second detour line DT**2**. The second gate metal layer may include a metal, a metal alloy, or a metal nitride. The second gate metal layer may include stacked metal layers.

[0167] In an exemplary embodiment of the present invention, the second gate pattern may include a storage electrode overlapping the gate electrode **135**.

[0168] Referring to FIG. **16**, the interlayer insulation layer **140** may be partially removed to form a first contact hole **142**, a second contact hole **144** and a third contact hole **146**.

[0169] In an exemplary embodiment of the present invention, the first contact hole **142**, the second contact hole **144** and the third contact hole **146** may be formed in a same photolithography process using a same mask.

[0170] The first contact hole **142** and the second contact hole **144** may pass through the interlayer insulation layer **140** and the first and second gate insulation layers **130** and **132** to partially expose an upper surface of the active pattern **120**. As an example, a source region and a drain region of the active pattern **120** may be exposed through the first contact hole **142** and the second contact hole **144**, respectively.

[0171] The third contact hole **146** may pass through the interlayer insulation layer **140** and the second gate insulation layer **132** to expose an upper surface of the scan line SL**1**.

[0172] A contact hole passing through the interlayer insulation layer **140** and the second gate insulation layer **132** to expose an upper surface of the first detour line DT**1** may be formed. A contact hole passing through the interlayer insulation layer **140** to expose an upper surface of the second detour line DT**2** may be formed.

[0173] Referring to FIG. **17**, a source pattern including the source electrode **150** and the drain electrode **155** may be formed. The source electrode **150** and the drain electrode **155** may contact the source region and the drain region of

the active pattern **120** through the first contact hole **142** and the second contact hole **144**, respectively.

[0174] In an exemplary embodiment of the present invention, the source pattern may include a third detour line DT**3**. The third detour line DT**3** may be formed in the detour area WA, and may contact the scan line SL**1** through the third contact hole **146**.

[0175] The source pattern may include at least one data line. In an exemplary embodiment of the present invention, a first data line may contact the first detour line DT**1**, and a second data line may contact the second detour line DT**2**.

[0176] The source pattern may include a power line and a power bus line. The power line may be disposed in the display area AA, and may extend in a direction parallel with the data lines. The power bus line may be disposed in the peripheral area PA, and may extend in a direction parallel with the scan line SL**1**.

[0177] As an example, a source metal layer may be formed on the interlayer insulation layer **140**, and then patterned through a photolithography process to form the source pattern. The source metal layer may include a metal, a metal alloy, or a metal nitride. The source metal layer may include stacked metal layers.

[0178] The via insulation layer **160** may be formed to cover the source pattern. The via insulation layer **160** may have a substantially flat upper surface.

[0179] As an example, the via insulation layer **160** may be formed from an organic material such as polyimide, epoxy resin, acrylic resin, or polyester through spin-coating or slit-coating.

[0180] Referring to FIG. **18**, the via insulation layer **160** may be partially etched to form a first via hole **163**. An upper surface of the drain electrode **155** may be exposed through the first via hole **163**.

[0181] The via insulation layer **160** may be partially etched to form a second via hole exposing an upper surface of the power line and the power bus line.

[0182] Referring to FIG. **19**, the pixel electrode **170** and the detour bus line VDD**2** are formed on the via insulation layer **160**. The pixel electrode **170** may be electrically connected to the drain electrode **155**. The detour bus line VDD**2** may be formed in the detour area WA, and may be electrically connected to the power line and the power bus line.

[0183] As an example, a pixel metal layer may be formed on the via insulation layer **160**, and then patterned through a photolithography process to form the pixel electrode **170** and the detour bus line VDD**2**.

[0184] The pixel metal layer may include a metal, a metal alloy, a metal nitride, or a transparent conductive material such as ITO.

[0185] Referring to FIG. **20**, a light-emitting structure may be formed on the display substrate.

[0186] The pixel-defining layer **175** may be formed on the via insulation layer **160** in the display area AA, for example, to cover a peripheral portion of the pixel electrode **170**. For example, the pixel-defining layer **175** may be formed by coating a photosensitive organic material including polyimide resin or acrylic resin, exposing a coating layer to light and developing the coating layer.

[0187] The light-emitting layer **180** may include at least one of a hole injection layer, a hole transport layer, an organic light-emitting layer, an electron transport layer and an electro injection layer.

[0188] As an example, the light-emitting layer **180** may be formed on each pixel electrode **170** exposed through an opening of the pixel-defining layer **175** by using an organic light-emitting material for emitting a red light, a green light or a blue light. For example, the light-emitting layer **180** may be formed through a spin-coating process, a role-printing process, a nozzle-printing process, or an inkjet-printing process by using a fin metal mask including openings that expose regions where a red pixel, a green pixel and a blue pixel are formed. Thus, an organic light-emitting layer including an organic light-emitting material may be formed on each pixel.

[0189] In an exemplary embodiment of the present invention, the light-emitting layer **180** may be formed continuously in the display area AA. The light-emitting layer **180** may be a stacked structure including a green light-emitting layer, a red light-emitting layer and a blue light-emitting layer to emit a white light.

[0190] As an example, a metal having a low work function such as aluminum (Al), silver (Ag), tungsten (W), copper (Cu), nickel (Ni), chrome (Cr), molybdenum (Mo), titanium (Ti), platinum (Pt), tantalum (Ta), neodymium (Nd) or scandium (Sc), magnesium (Mg), or an alloy thereof may be deposited to form an opposing electrode **190**. The opposing electrode **190** may include a transparent conductive material such as indium tin oxide, indium zinc oxide, zinc oxide, or indium oxide.

[0191] An inorganic material such as silicon oxide, silicon nitride, or a metal oxide may be deposited on the opposing electrode **190** to form the encapsulation layer **195**. The encapsulation layer **195** may extend continuously in the display area AA and the detour area WA.

[0192] The carrier substrate **50** may be separated from the base substrate **100** to manufacture the display apparatus according to an exemplary embodiment of the present invention (e.g., the display apparatus described with reference to FIG. **10**). The carrier substrate **50** may be separated from the base substrate **100** through a laser-lifting process or by a mechanical tensile force applied thereto.

[0193] Referring to FIG. **21**, the light-emitting layer **180***a* may include the hole transport layer **182**, the organic light-emitting layer **184** and the electron transport layer **186**, which may be formed sequentially on the display substrate.

[0194] The organic light-emitting layer **184** may be formed by printing a light-emitting material using a fine metal mask that selectively exposes a pixel in the display area AA after the hole transport layer **182** is formed.

[0195] The carrier substrate **50** may be separated from the base substrate **100** to manufacture the display apparatus according to an exemplary embodiment of the present invention (e.g., the display apparatus described with reference to FIG. **11**).

[0196] A display substrate and a display apparatus according to some exemplary embodiments of the present invention may be used for a mobile display. For example, a display substrate and a display apparatus according to some exemplary embodiments of the present invention may be used for a computer, a mobile phone, a smart phone, a smart pad, an MP3 player, a navigator for a vehicle or a heads-up display.

[0197] While the present invention has been shown and described with reference to the exemplary embodiments thereof, it will be apparent to those of ordinary skill in the

art that various changes in form and detail may be made thereto without departing from the spirit and scope of the present invention.

What is claimed is:

1. A display apparatus comprising:

a substrate including a first area, a function-adding area, of which at least a portion is surrounded by the first area, and a detour area disposed between the first area and the function-adding area;

a plurality of pixel circuits disposed in the first area;

at least one scan line electrically connected to at least one of the pixel circuits and passing through the detour area, the scan line including first straight portions, which are disposed in the first area and extends in a first direction, and a first detour portion, which connects the first straight portions to each other and has a shape that curves or bends along the function-adding area;

at least one data line electrically connected to at least one of the pixel circuits and passing through the detour area, the data line including second straight portions, which are disposed in the first area and extends in a second direction crossing the first direction, and a second detour portion, which connects the second straight portions to each other and has a shape that curves or bends along the function-adding area and intersects with the first detour portion;

a first organic insulation layer disposed on the first detour portion and the second detour portion;

a first transparent conductive layer disposed on the first organic insulation layer;

a second organic insulation layer disposed on the first transparent conductive layer;

a second transparent conductive layer disposed on the second organic insulation layer; and

a third transparent conductive layer disposed in a different pattern from the first transparent conductive layer and electrically connected to the first transparent conductive layer.

2. The display apparatus of claim **1**, further comprising at least one light-emitting element electrically connected to corresponding one of the pixel circuits, and the second transparent conductive layer constitutes an electrode of the light-emitting element.

3. The display apparatus of claim **2**, wherein the light-emitting element include organic layer including an emission layer, and the second transparent conductive layer contacts the organic layer.

4. The display apparatus of claim **1**, wherein the second transparent conductive layer overlaps the first transparent conductive layer.

5. The display apparatus of claim **1**, wherein at least one of the first to the third transparent conductive layers includes at least one of indium tin oxide, indium zinc oxide, zinc oxide and indium oxide.

6. The display apparatus of claim **1**, wherein one of the first detour portion and the second detour portion is disposed in a same layer as the scan line.

7. The display apparatus of claim **6**, wherein the other of the first detour portion and the second detour portion is disposed in a same layer as the data line.

8. The display apparatus of claim **1**, further comprising at least one power line electrically connected to at least one of the pixel circuits.

9. The display apparatus of claim **8**, wherein the power line is disposed in a same layer as the data line.

10. The display apparatus of claim **1**, further comprising a camera module overlapping the function-adding area.

11. A display apparatus comprising:

a substrate including a first area, a function-adding area, of which at least a portion is surrounded by the first area, and a detour area disposed between the first area and the function-adding area;

a plurality of pixel circuits disposed in the first area;

at least one scan line electrically connected to at least one of the pixel circuits and passing through the detour area, the scan line extending in a first direction in the first area, the scan line including a first detour portion having a shape that curves or bends along the function-adding area;

at least one data line electrically connected to at least one of the pixel circuits and passing through the detour area, the data line extending in a second direction crossing the first direction in the first area, the data line including a second detour portion having a shape that curves or bends along the function-adding area and intersects with the first detour portion;

a first organic insulation layer disposed on the first detour portion and the second detour portion;

a first transparent conductive layer disposed on the first organic insulation layer;

a second organic insulation layer disposed on the first transparent conductive layer;

a second transparent conductive layer disposed on the second organic insulation layer; and

a third transparent conductive layer disposed in a different pattern from the first transparent conductive layer and electrically connected to the first transparent conductive layer.

12. The display apparatus of claim **11**, further comprising at least one light-emitting element electrically connected to corresponding one of the pixel circuits, and the second transparent conductive layer constitutes an electrode of the light-emitting element.

13. The display apparatus of claim **12**, wherein the light-emitting element include organic layer including an emission layer, and the second transparent conductive layer contacts the organic layer.

14. The display apparatus of claim **11**, wherein the second transparent conductive layer overlaps the first transparent conductive layer.

15. The display apparatus of claim **11**, wherein at least one of the first to the third transparent conductive layers includes at least one of indium tin oxide, indium zinc oxide, zinc oxide and indium oxide.

16. The display apparatus of claim **11**, wherein one of the first detour portion and the second detour portion is disposed in a same layer as the scan line.

17. The display apparatus of claim **16**, wherein the other of the first detour portion and the second detour portion is disposed in a same layer as the data line.

18. The display apparatus of claim **11**, further comprising at least one power line electrically connected to at least one of the pixel circuits.

19. The display apparatus of claim **18**, wherein the power line is disposed in a same layer as the data line.

20. The display apparatus of claim **11**, further comprising a camera module overlapping the function-adding area.

* * * * *