US012405697B2

(12) **United States Patent**
Matsumoto

(10) **Patent No.: US 12,405,697 B2**
(45) **Date of Patent: Sep. 2, 2025**

(54) **POSITION DETECTION SENSOR INCLUDING EXTENDABLE ELECTRODES IN A BENDABLE REGION AND METHOD FOR MANUFACTURING SUCH POSITION DETECTION SENSOR**

(71) Applicant: **Wacom Co., Ltd.**, Saitama (JP)

(72) Inventor: **Yoshiharu Matsumoto**, Saitama (JP)

(73) Assignee: **Wacom Co., Ltd.**, Saitama (JP)

(*) Notice: Subject to any disclaimer, the term of this patent is extended or adjusted under 35 U.S.C. 154(b) by 0 days.

(21) Appl. No.: **18/623,406**

(22) Filed: **Apr. 1, 2024**

(65) **Prior Publication Data**

US 2024/0248572 A1 Jul. 25, 2024

Related U.S. Application Data

(63) Continuation of application No. 17/890,851, filed on Aug. 18, 2022, now Pat. No. 11,977,710, which is a (Continued)

(30) **Foreign Application Priority Data**

Mar. 11, 2020 (JP) 2020-041493

(51) **Int. Cl.**
G06F 3/046 (2006.01)

(52) **U.S. Cl.**
CPC ***G06F 3/046*** (2013.01); *G06F 2203/04102* (2013.01); *G06F 2203/04103* (2013.01)

(58) **Field of Classification Search**
CPC G06F 3/046; G06F 2203/04102; G06F 2203/04103
See application file for complete search history.

(56) **References Cited**

U.S. PATENT DOCUMENTS

2013/0234730 A1 9/2013 Kobori et al.
2015/0382446 A1* 12/2015 Kwon G06F 1/1643 174/251

(Continued)

FOREIGN PATENT DOCUMENTS

JP H07-253840 A 10/1995
JP 2013-186784 A 9/2013

(Continued)

OTHER PUBLICATIONS

International Search Report, mailed Apr. 27, 2021, for International Application No. PCT/JP2021/005392, 4 pages.

Primary Examiner — Lisa S Landis
(74) *Attorney, Agent, or Firm* — Seed Intellectual Property Law Group LLP

(57) **ABSTRACT**

A position detection sensor includes a base made of a flexible material. The base includes a terminal section having a plurality of terminal conductors disposed on a first surface of the base. The base includes a sensor pattern section including a plurality of electrode conductors arranged in predetermined patterns in an area that does not overlap with the terminal section on the first surface of the base. End portions of the plurality of electrode conductors are positioned so as to be connectable to corresponding ones of the terminal conductors in the terminal section. The first surface of the base includes a region of the terminal section, a region of the sensor pattern section, and a bendable region between these two regions. Each of the plurality of electrode conductors, which is electrically connected to each of the plurality of terminal conductors, is disposed so as to be extensible in the bendable region.

18 Claims, 10 Drawing Sheets

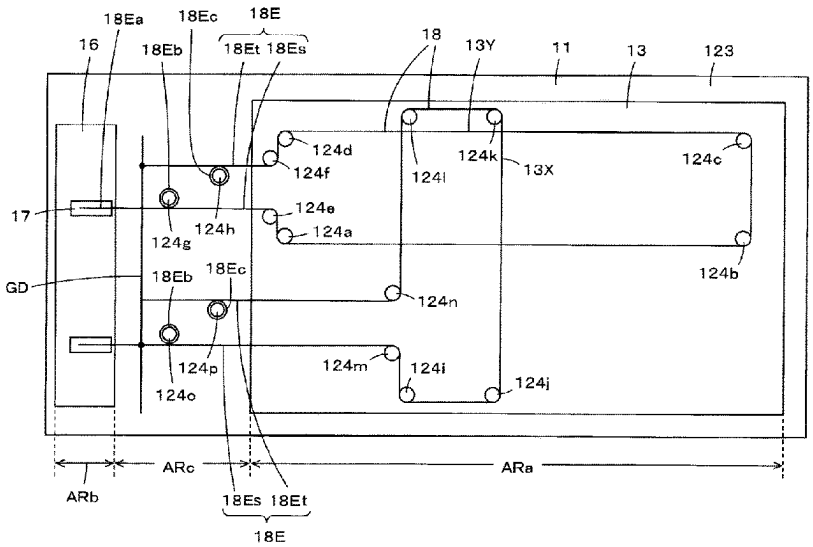

Related U.S. Application Data

continuation of application No. PCT/JP2021/005392, filed on Feb. 15, 2021.

(56) **References Cited**

U.S. PATENT DOCUMENTS

2018/0059828	A1*	3/2018	Matsumoto	H05K 3/10
2019/0018528	A1	1/2019	Higano	
2021/0026473	A1	1/2021	Kim et al.	

FOREIGN PATENT DOCUMENTS

JP	2016-076146	A	5/2016
JP	2016/194543	A1	12/2016
JP	2019-020448	A	2/2019

* cited by examiner

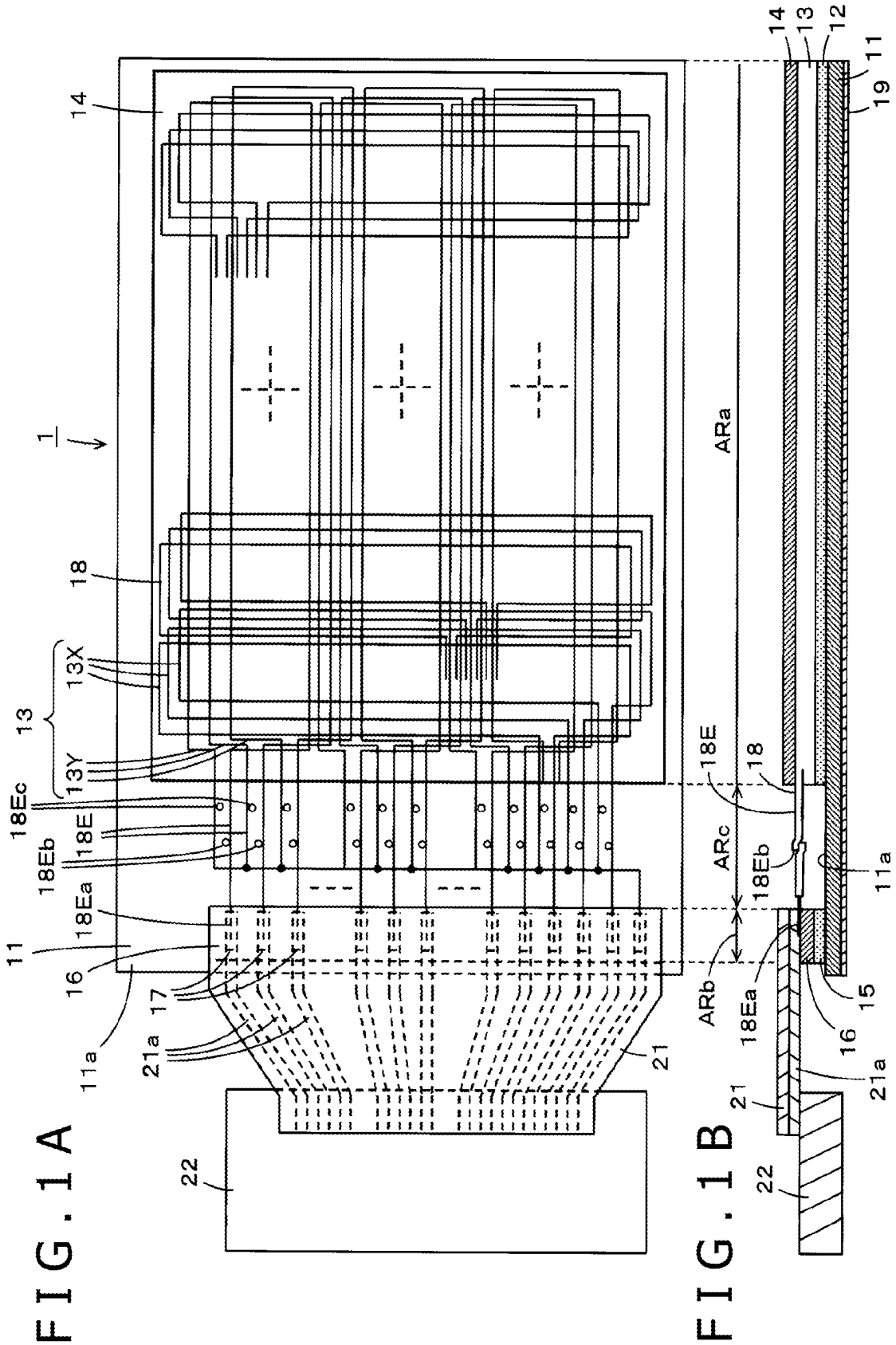
1
14
18
13
13X
13Y
18Ec
18E
18Eb
18Ea
11
16
17
11a
21a
21
22
ARa
ARc
ARb
12
19
15

FIG. 1A

FIG. 1B

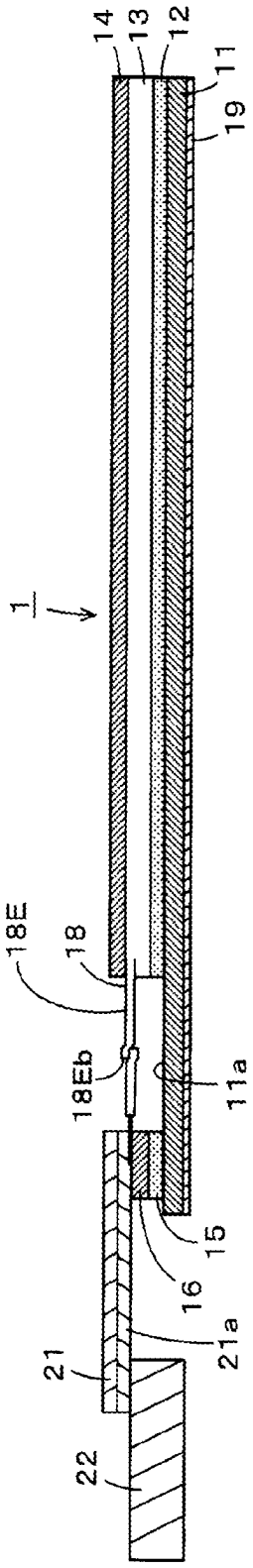
14
13
12
11
19
1
18E
18
18Eb
11a
15
16
21a
21
22

FIG. 2A

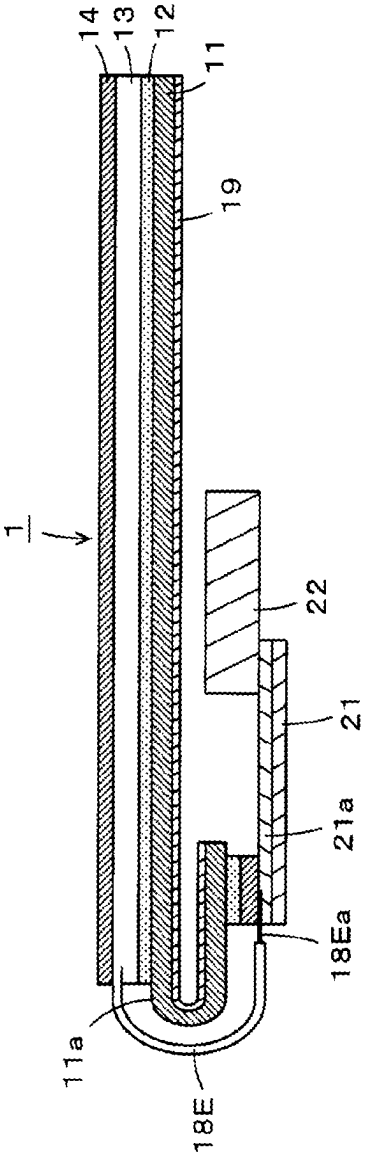
14
13
12
11
19
1
22
21
21a
18Ea
11a
18E

FIG. 2B

FIG. 3

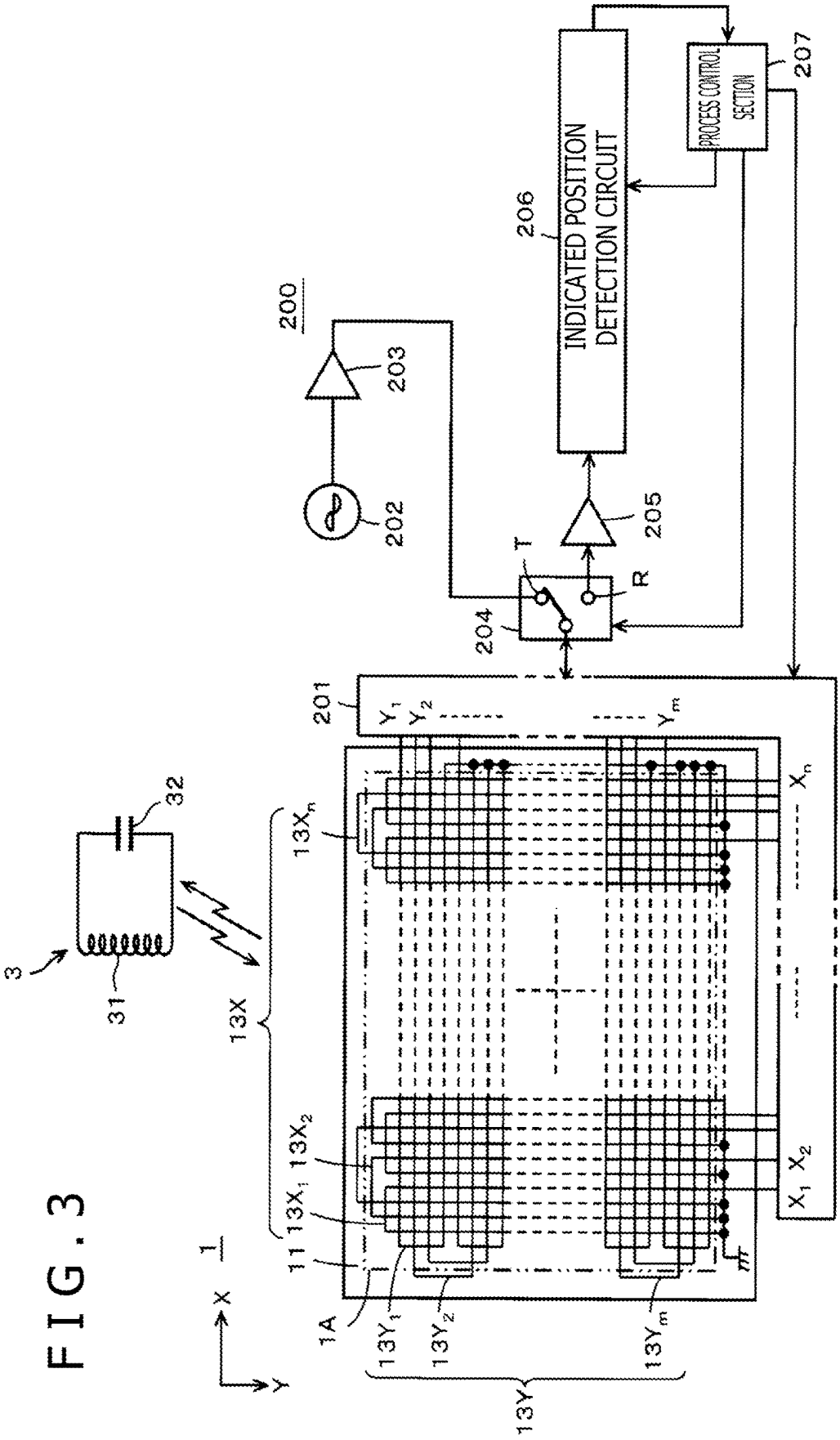
200
202
203
204
205
206
INDICATED POSITION DETECTION CIRCUIT
207
PROCESS CONTROL SECTION
T
R
201
Y_1 Y_2 Y_m
X_1 X_2 X_n
3
31
32
1
1A
11
13X
$13X_1$ $13X_2$ $13X_n$
$13Y_1$ $13Y_2$ $13Y_m$
13Y
X
Y

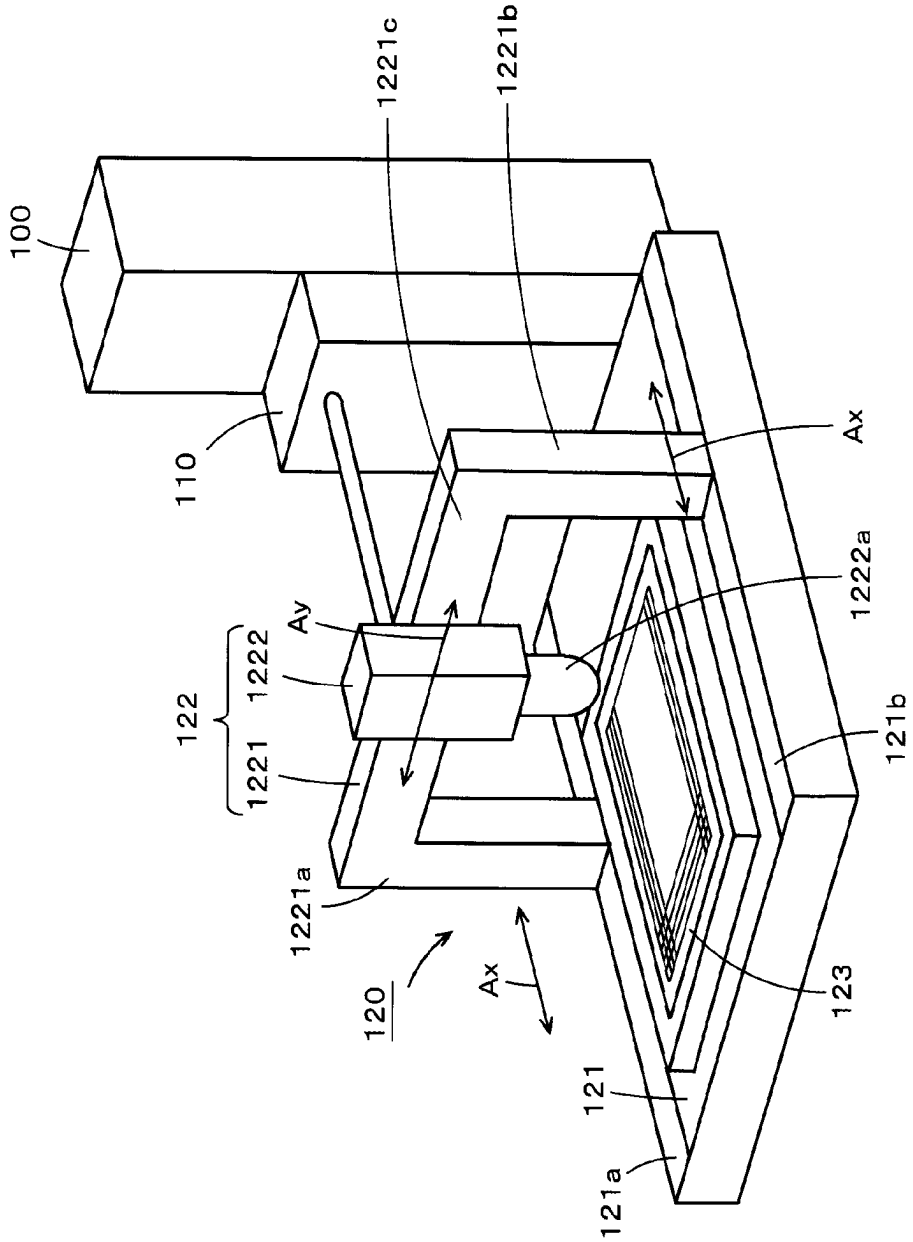
100
110
1221c
1221b
Ax
1222a
Ay
122
1222
1221
121b
1221a
120
Ax
123
121
121a

FIG. 4

FIG. 5

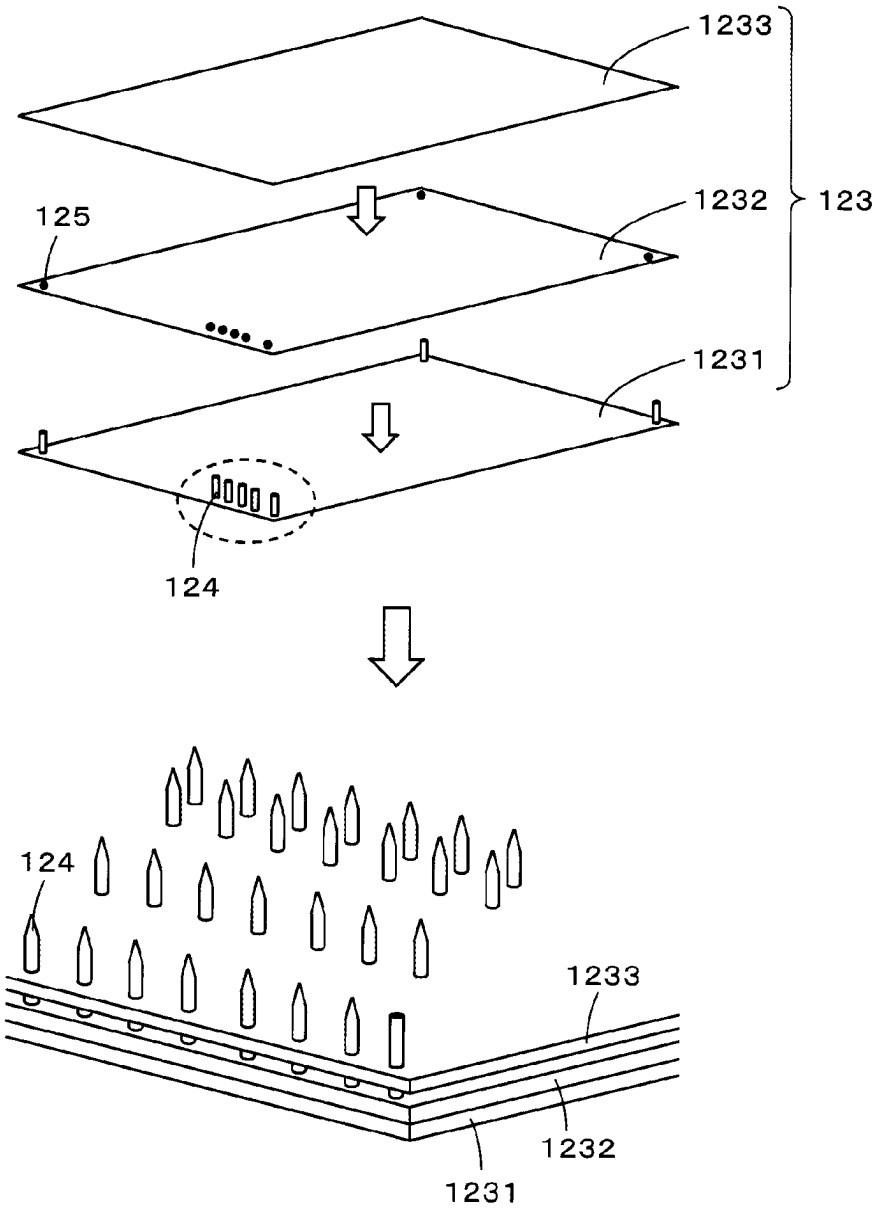

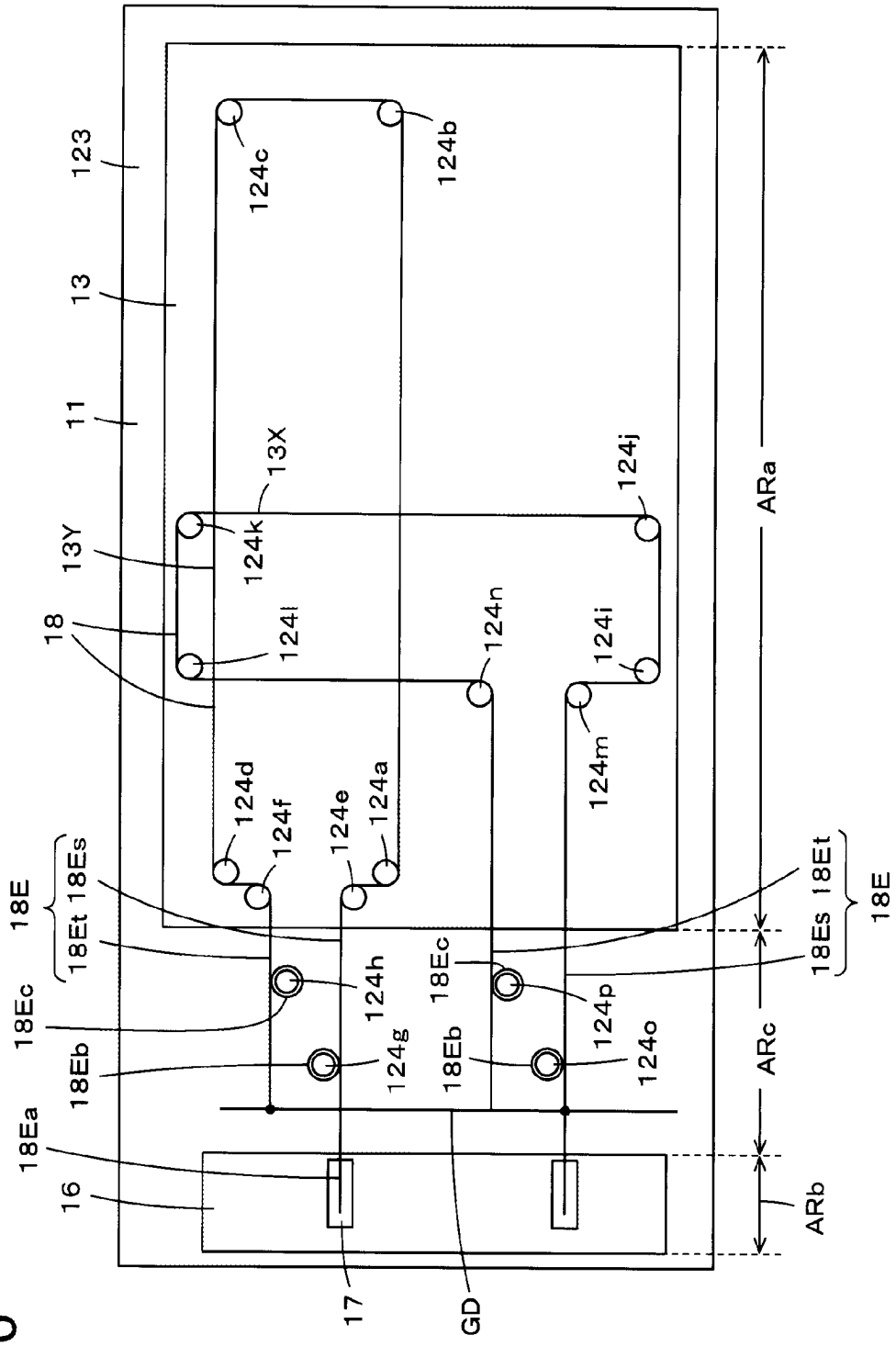
123
13
11
13Y
18
18E
18Es
18Et
18Ec
18Eb
18Ea
16
17
GD
124c
124b
13X
124k
124l
124j
124n
124i
124m
124d
124f
124e
124a
124h
124g
124p
124o
ARa
ARc
ARb

FIG. 6

FIG. 7

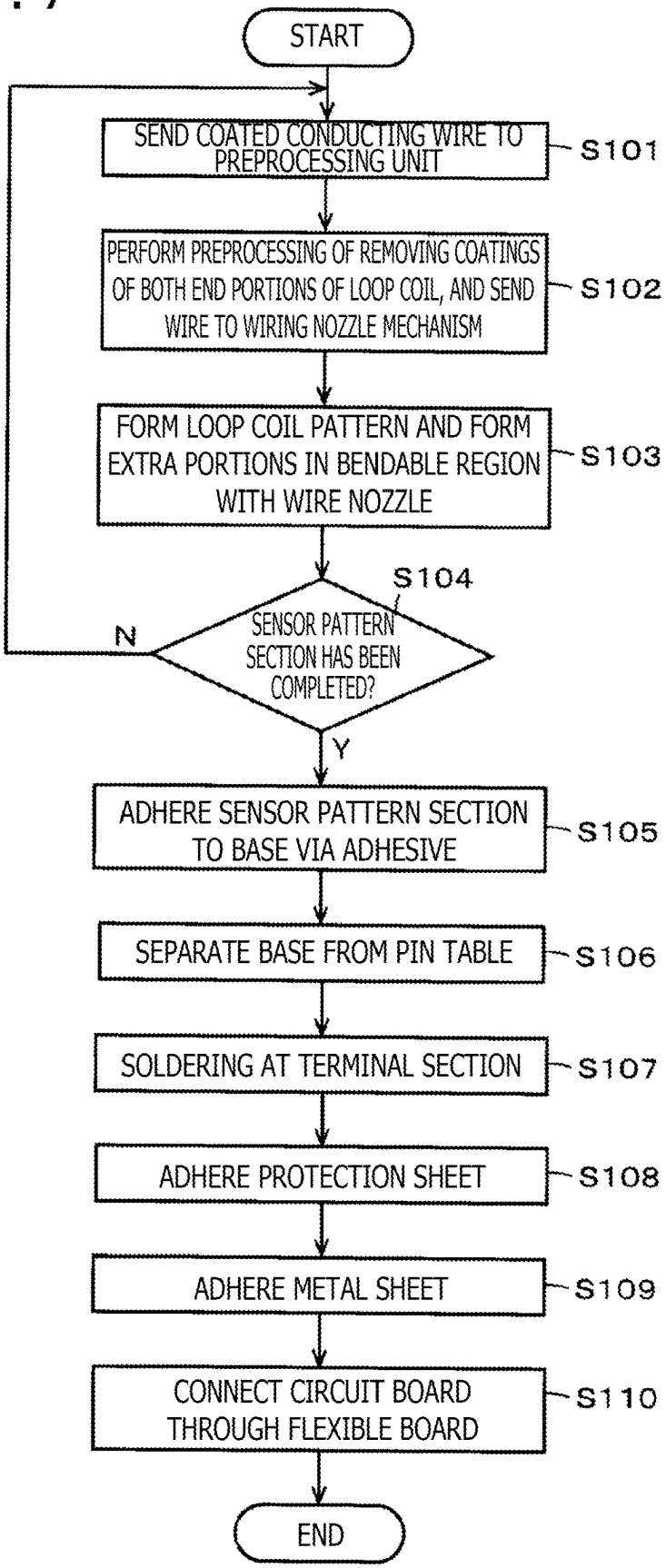
START
SEND COATED CONDUCTING WIRE TO PREPROCESSING UNIT
S101
PERFORM PREPROCESSING OF REMOVING COATINGS OF BOTH END PORTIONS OF LOOP COIL, AND SEND WIRE TO WIRING NOZZLE MECHANISM
S102
FORM LOOP COIL PATTERN AND FORM EXTRA PORTIONS IN BENDABLE REGION WITH WIRE NOZZLE
S103
S104
SENSOR PATTERN SECTION HAS BEEN COMPLETED?
N
Y
ADHERE SENSOR PATTERN SECTION TO BASE VIA ADHESIVE
S105
SEPARATE BASE FROM PIN TABLE
S106
SOLDERING AT TERMINAL SECTION
S107
ADHERE PROTECTION SHEET
S108
ADHERE METAL SHEET
S109
CONNECT CIRCUIT BOARD THROUGH FLEXIBLE BOARD
S110
END

FIG. 8

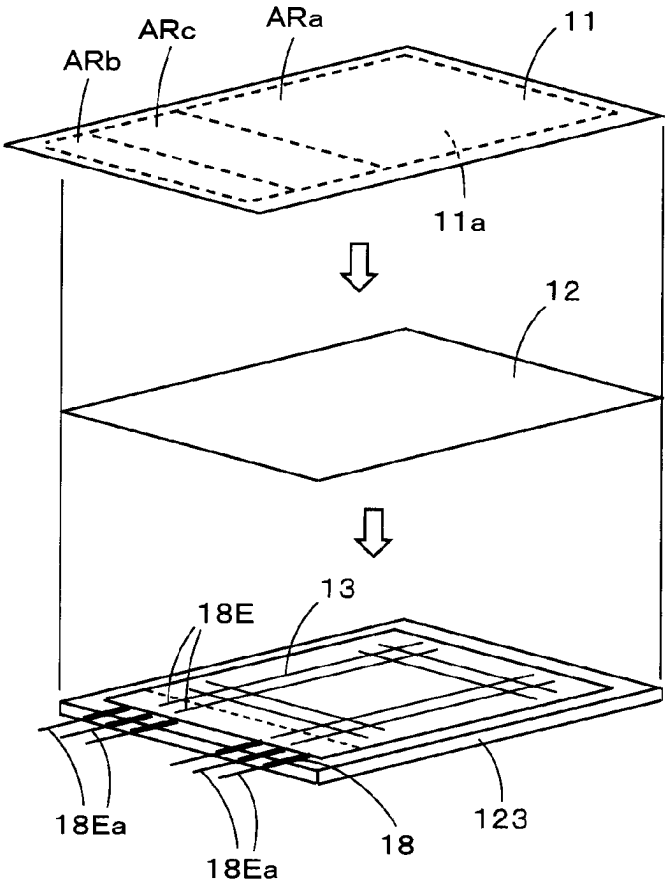

FIG. 9

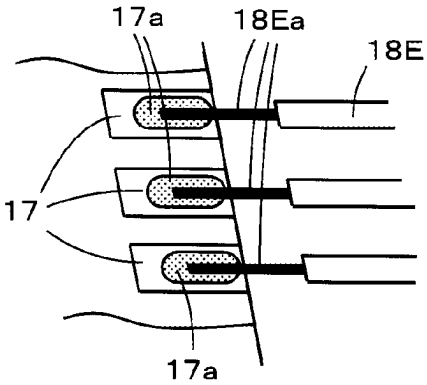

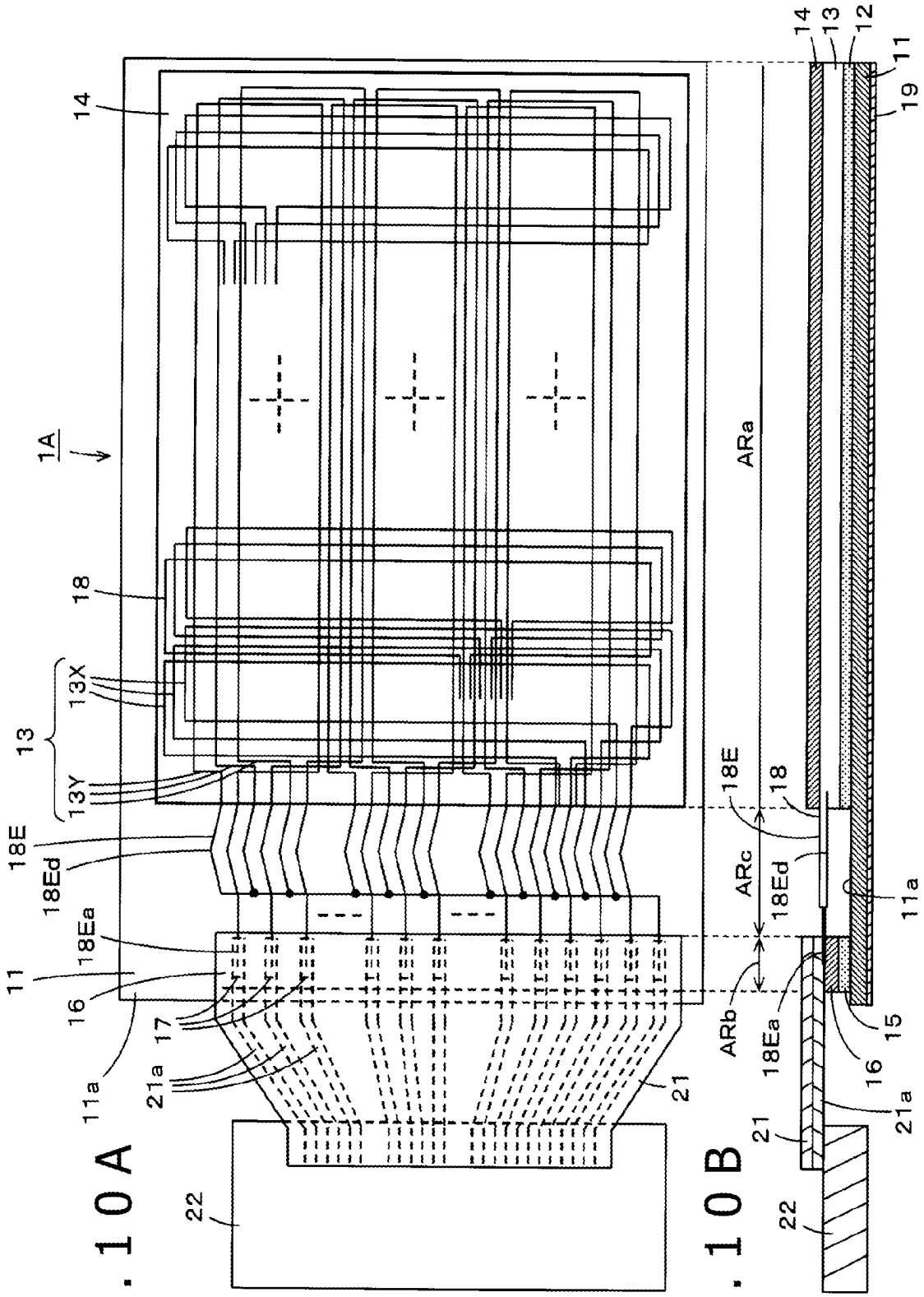

FIG.10A

FIG.10B

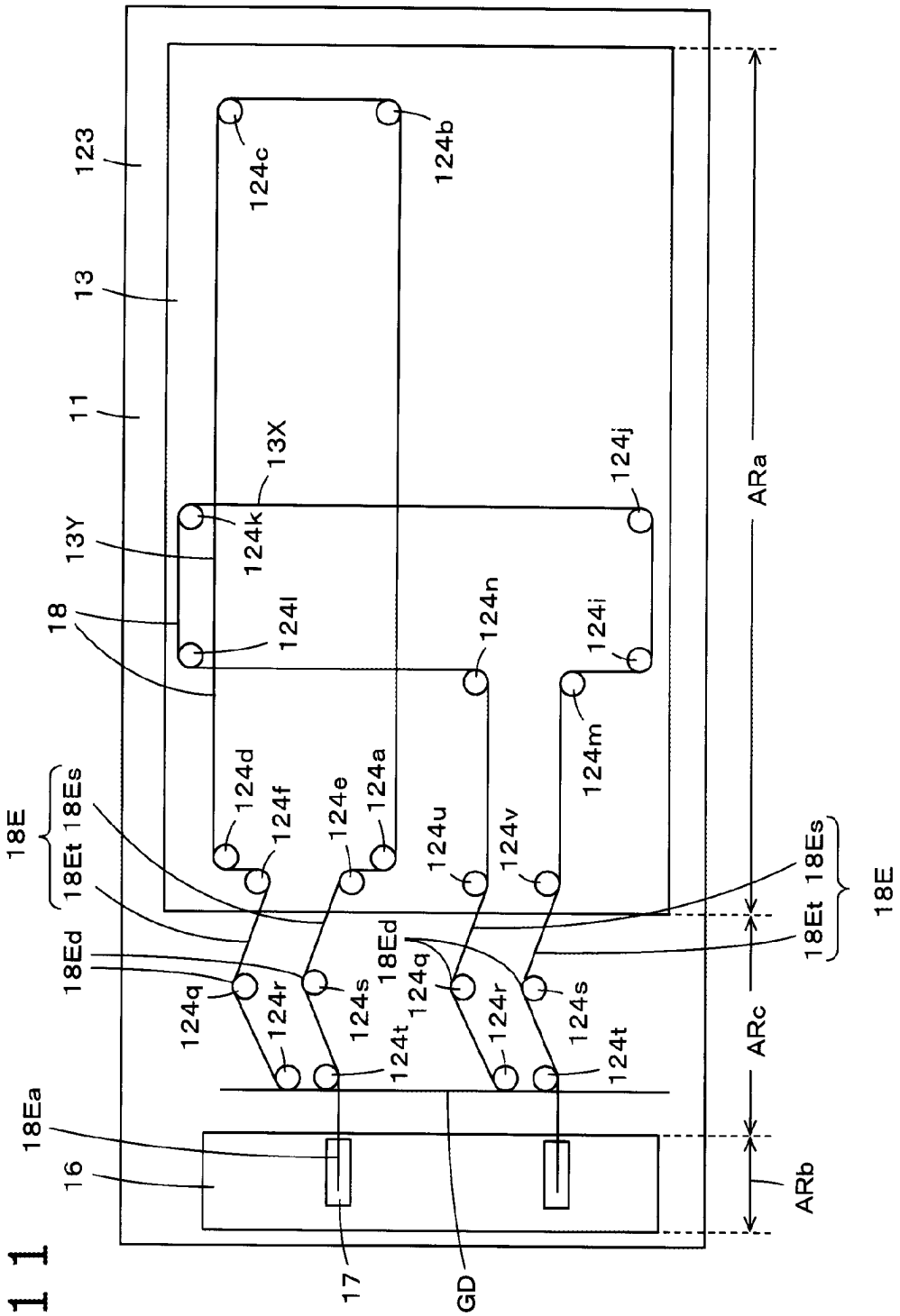
123
13
11
13Y
18
18E
18Et
18Es
18Ed
18Ea
16
17
GD
13X
124c
124b
124k
124l
124j
124n
124i
124m
124d
124f
124e
124a
124u
124v
124q
124r
124s
124t
ARa
ARc
ARb

FIG. 11

POSITION DETECTION SENSOR INCLUDING EXTENDABLE ELECTRODES IN A BENDABLE REGION AND METHOD FOR MANUFACTURING SUCH POSITION DETECTION SENSOR

BACKGROUND

Technical Field

This disclosure relates to a position detection sensor in which a plurality of electrode conductors are disposed on a base to detect a position indicated by a position indicator, and a method for manufacturing the position detection sensor.

Description of the Related Art

Known position detection sensors of this type typically include a board in the form of a sheet or a film, and a plurality of electrode conductors formed by copper foil patterns formed in predetermined patterns on the board through printing or deposition. Such known position detection sensor is disclosed in, for example, Japanese Patent Laid-Open No. 2013-186784.

In a case where the plurality of electrode conductors are disposed on the sheet-form or film-form board, in order to prevent the electrode conductors from overlapping each other, through holes are formed in the sheet-form or film-form board, and both a front surface and a rear surface of the sheet-form or film-form board are used on which the electrode conductors are formed.

Thus, the manufacturing process requires the formation of the through holes in the sheet-form or film-form board and the formation of electrode patterns on both the front and rear surfaces of the board, resulting in high manufacturing costs. The higher cost problem is exacerbated in a case of large-sized position detection sensors.

Meanwhile, Japanese Patent Laid-Open No. H7-253840 discloses a method for making a position detection sensor at low costs. In the method described in Japanese Patent Laid-Open No. H7-253840, the electrode conductor patterns are formed by arranging guide pins (i.e., pins for wiring) on a flat plate, sequentially connect these guide pins with coated conducting wires (i.e., insulated sensor wires), and folding over the plate to extend the coated conducting wires therealong.

In the position detection sensor described in Japanese Patent Laid-Open No. H7-253840, which is not provided with a terminal section, the coated conducting wires which form the electrode conductors are simply extended from the flat plate and led out to form lead portions. Accordingly, in order to connect an external circuit to each of the electrode conductors of the position detection sensor, it is necessary to remove the coated conducting wires of the lead portions to enable soldering of the lead portions, which is very cumbersome and makes mass production difficult.

To overcome this problem, another position detection sensor has been proposed (see WO 2016/194543), in which electrode conductors are formed by use of coated conducting wires on a base formed of a board in the shape of a sheet or a film, which contributes to reduction in costs, wherein a terminal section is provided on the base to facilitate connection with an external circuit.

In recent years, there have been provided input devices which include a position detection sensor disposed so as to overlap or coincide with a display screen of a display and capable of detecting an input operation performed on the display screen by a user using a position indicator. In a typical input device of this type, a detection region of the position detection sensor coincides with a display region of the display screen of the display, and an operation input at any position on the entire display screen can be detected as an operation input. In addition, with respect to the input devices of this type, there has been a demand for minimizing the size of an outer frame of the display screen, regardless of the size of the display.

However, in the position detection sensor disclosed in WO 2016/194543, the terminal section is formed on the same surface as electrode conductor patterns, and therefore the terminal section lies outside of the detection region, i.e., a region in which the electrode conductors are formed. Accordingly, a region of the terminal section lies outside of the detection region of the position detection sensor, which has the same size as that of the display screen of the display, and the size of the outer frame of the display screen is increased due to the region required for the terminal section.

BRIEF SUMMARY

The disclosure is directed to providing a position detection sensor that is able to overcome the above problems.

To solve the above problems, there is provided a position detection sensor including a base made of a flexible material. The base includes a terminal section having a plurality of terminal conductors formed on a first surface of the base. The base includes a sensor pattern section including a plurality of electrode conductors formed of coated conducting wires arranged in predetermined patterns and disposed on and adhered to the base via an adhesive in an area that does not overlap with the terminal section on the first surface of the base. End portions of the coated conducting wires of the plurality of electrode conductors are positioned so as to be connectable to corresponding ones of the terminal conductors in the terminal section. The first surface of the base includes a region of the terminal section, a region of the sensor pattern section, and a bendable region between these two regions. The end portions of the plurality of electrode conductors of the sensor pattern section are electrically connected to the plurality of terminal conductors in the terminal section through the bendable region, and each of the plurality of electrode conductors is disposed so as to be extensible (extendable) in the bendable region between the terminal section and the sensor pattern section.

In the position detection sensor having the above-described configuration, the bendable region lies between the sensor pattern section and the terminal section formed on the first surface of the base made of the flexible material, and therefore, the terminal section can be positioned on an opposite side of the base with respect to the first surface when the base is bent at the bendable region. As a result, substantially, only the sensor pattern section lies on the side of the base on which the first surface lies, and this makes it possible to reduce the size of an outer frame of a display screen of a display when the position detection sensor is disposed so as to overlap or coincide with the display screen.

In addition, in this case, the end portions of each of the plurality of electrode conductors of the sensor pattern section are typically arranged to extend up to the terminal section through the bendable region to be electrically connected to the terminal section. If portions of the electrode conductors which extend over the bendable region do not have extra room portions, a bending stress generated when the terminal section is bent to the side opposite to the side

of the base on which the first surface lies may cause poor electrical connection between the end portions of the electrode conductors and the terminal section, or may even cause a break in the electrode conductors.

In contrast, in the position detection sensor having the above-described configuration, each of the plurality of electrode conductors is disposed so as to be extensible (extendable) between the terminal section and the sensor pattern section in the bendable region, and the portions of the electrode conductors which extend over the bendable region have extra room portions, which contributes to preventing a bending stress generated when the terminal section is bent to the side opposite to the side of the base on which the first surface lies from causing poor electrical connection between the end portions of the electrode conductors and the terminal section, or causing a break in the electrode conductors.

BRIEF DESCRIPTION OF THE DRAWINGS

FIGS. **1**A and **1**B are diagrams for explaining an example configuration of a position detection sensor according to an embodiment of the disclosure;

FIGS. **2**A and **2**B are diagrams for explaining the example configuration of the position detection sensor according to the embodiment of the disclosure;

FIG. **3** is a diagram for explaining an example configuration of a position detection circuit connected to the position detection sensor according to the embodiment of the disclosure;

FIG. **4** is a diagram for explaining an example of an apparatus for manufacturing the position detection sensor according to the embodiment of the disclosure;

FIG. **5** is a diagram for explaining an example of a method for manufacturing the position detection sensor according to the embodiment of the disclosure;

FIG. **6** is a diagram for explaining an example of the method for manufacturing the position detection sensor according to the embodiment of the disclosure;

FIG. **7** is a flowchart for explaining a procedure of an example of the method for manufacturing the position detection sensor according to the embodiment of the disclosure;

FIG. **8** is a diagram for explaining an example of the method for manufacturing the position detection sensor according to the embodiment of the disclosure;

FIG. **9** is a diagram for explaining an example of the method for manufacturing the position detection sensor according to the embodiment of the disclosure;

FIGS. **10**A and **10**B are diagrams for explaining an example configuration of a position detection sensor according to another embodiment of the disclosure; and

FIG. **11** is a diagram for explaining a method for manufacturing the position detection sensor according to the other embodiment of the disclosure.

DETAILED DESCRIPTION OF THE PREFERRED EMBODIMENTS

Hereinafter, position detection sensors according to embodiments of the disclosure will be described with reference to the accompanying drawings.

Position Detection Sensor According to Embodiment

A position detection sensor according to an embodiment of the disclosure will be described below. The position detection sensor employs an electromagnetic induction method, and includes a sensor pattern section including a plurality of electrode conductors. Each of the electrode conductors has a loop coil pattern.

FIGS. **1**A and **1**B are diagrams for explaining the configuration of a position detection sensor **1** according to this embodiment. FIG. **1**A is a diagram illustrating a surface of the position detection sensor **1** on which a sensor pattern section **13** is formed as viewed in a direction perpendicular to that surface. FIG. **1**B is a schematic diagram illustrating the configuration of a cross-section of the position detection sensor **1**.

As illustrated in FIGS. **1**A and **1**B, the position detection sensor **1** according to this embodiment includes the sensor pattern section **13** and a base (i.e., a board) **11** which is in the shape of a rectangular sheet or film and which is made of a flexible insulating material, e.g., polyethylene terephthalate (PET). The sensor pattern section **13** includes a plurality of loop coils, i.e., a plurality of electrode conductors, and is disposed on and adhered to a first surface **11***a* of the base **11** via an adhesive **12**. A flexible board may be used as the base **11**.

In this embodiment, the sensor pattern section **13** lies in a rectangular region ARa on the first surface **11***a* of the rectangular base **11**. The rectangular region ARa extends over most of the base **11** in a vertical direction, and extends over a right-hand portion of the base **11** in a lateral direction exclusive of a left-hand portion. A rectangular protection sheet **14** made of an insulating material, e.g., PET, is disposed so as to cover an entire exposed surface of the sensor pattern section **13**. In the sensor pattern section **13**, space (air space) is formed except where the electrode conductors lie, and the protection sheet **14** is adhered and joined to the base **11** via the adhesive **12** through the space of the sensor pattern section **13**.

In addition, in this embodiment, a terminal section **16** is adhered, via an adhesive **15**, to a lateral end portion of the left-hand portion of the first surface **11***a* of the base **11** on which the sensor pattern section **13** is not disposed. In other words, the terminal section **16** is provided in a region ARb corresponding to a lateral edge portion of the base **11**, the region ARb not overlapping with the region ARa in which the sensor pattern section **13** is disposed. In this embodiment, the terminal section **16** includes a board which is in the shape of a sheet or a film and which is made of an insulating material, e.g., PET, and terminal conductors **17** formed on the board by, for example, printing or the like. The terminal conductors **17** are formed by copper foil patterns to be electrically connected to the corresponding electrode conductors of the sensor pattern section **13**.

In this embodiment, a bendable region ARc is provided between the region ARa of the sensor pattern section **13** and the region ARb of the terminal section **16** in the lateral direction of the base **11**. In this embodiment, the upper side of each of the bendable region ARc and the region ARb of the terminal section **16** is not covered with the protection sheet **14**. In addition, the adhesive **15** is not applied to the bendable region ARc. The bendable region ARc is arranged to have a necessary and sufficient dimension in the lateral direction of the base **11** to allow the base **11** to be bent such that a portion of the bendable region ARc, which extends from a vicinity of a lateral end portion of the region ARa of the sensor pattern section **13** is bent to place an end portion of the base **11** toward the terminal section **16** side on an opposite side of the base **11** with respect to the first surface **11***a* (see FIG. **2**B).

As illustrated in FIG. **1**A, the sensor pattern section **13** includes a plurality of loop coils, which are examples of the plurality of electrode conductors. In this embodiment, the

plurality of loop coils include a plurality of X-axis direction loop coils **13**X and a plurality of Y-axis direction loop coils **13**Y.

Each of the X-axis direction loop coils **13**X is formed by a rectangular loop coil having a longitudinal direction parallel to the vertical direction (i.e., a Y-axis direction of a coordinate system) of the base **11**, and the plurality of X-axis direction loop coils **13**X are arranged at predetermined intervals in the lateral direction (i.e., an X-axis direction of the coordinate system) of the base **11**. Meanwhile, each of the Y-axis direction loop coils **13**Y is formed by a rectangular loop coil having a longitudinal direction parallel to the lateral direction of the base **11**, and the Y-axis direction loop coils **13**Y are arranged at predetermined intervals in the vertical direction of the base **11**.

In this embodiment, the plurality of X-axis direction loop coils **13**X and the plurality of Y-axis direction loop coils **13**Y of the sensor pattern section **13** are each formed of a coated conducting wire **18**, and are disposed on the first surface **11***a* of the base **11** so that they can (partially) overlap with each other. In this case, as illustrated in FIG. **1**A, each of the X-axis direction loop coils **13**X and the Y-axis direction loop coils **13**Y is disposed at a predetermined position on the first surface **11***a* of the base **11** so as to have a predetermined pattern.

In addition, in this embodiment, as illustrated in FIGS. **1**A and **1**B, both end portions **18**E of each of the X-axis direction loop coils **13**X and the Y-axis direction loop coils **13**Y are disposed so as to extend from the protection sheet **14** in the lateral direction toward the terminal section **16** beyond a lateral edge of the region ARa of the sensor pattern section **13** toward the terminal section **16** side, and traverses across the bendable region ARc to the region ARb of the terminal section **16**. At this time, a position at which the both end portions **18**E of each of the X-axis direction loop coils **13**X and the Y-axis direction loop coils **13**Y are led out from the sensor pattern section **13** is aligned with the position of a corresponding one of the terminal conductors **17** in the terminal section **16** to which the both end portions **18**E are determined to be connected.

In other words, the both end portions **18**E of each of the X-axis direction loop coils **13**X and the Y-axis direction loop coils **13**Y are arranged to lie over the corresponding terminal conductor **17** in the terminal section **16** when the both end portions **18**E are extended in a straight line across the bendable region ARc in the lateral direction from the lateral edge of the region ARa of the sensor pattern section **13** on the side on which the terminal section **16** lies.

Then, in this embodiment, as illustrated in FIG. **1**B, an insulating coating of the coated conducting wire **18** is removed, resulting in an exposure of a conducting wire, at a tip portion **18**Ea of the both end portions **18**E of each of the X-axis direction loop coils **13**X and the Y-axis direction loop coils **13**Y, and the tip portion **18**Ea, at which the conducting wire is exposed, is positioned on the corresponding terminal conductor **17** in the terminal section **16**.

Although not illustrated in the figures, the tip portion **18**Ea of the both end portions **18**E of each of the X-axis direction loop coils **13**X and the Y-axis direction loop coils **13**Y is electrically connected to the corresponding one of the terminal conductors **17** in the terminal section **16** through, for example, soldering. For example, a solder is applied onto each of the terminal conductors **17** in the terminal section **16** in advance, and the solder on each of the terminal conductors **17** in the terminal section **16** is heated, with the corresponding tip portions **18**Ea of the both end portions **18**E of the X-axis direction loop coils **13**X and the Y-axis direction loop coils **13**Y positioned thereon, to thereby solder each of the terminal conductors **17** in the terminal section **16** to the corresponding one of the tip portions **18**Ea of the both end portions **18**E of the X-axis direction loop coils **13**X and the Y-axis direction loop coils **13**Y.

Then, a metal sheet **19**, which is an example of an electromagnetic shielding layer, is adhered so as to cover an entire surface of the base **11** on the side opposite to the first surface **11***a*. In this embodiment, the metal sheet **19** includes an aluminum sheet and an amorphous sheet. The amorphous sheet of the metal sheet **19** prevents electromagnetic waves radiating from the sensor pattern section **13** from escaping to the outside on the opposite side of the base **11** of the first surface **11***a*, while the aluminum sheet serves to prevent introduction of noise from the outside on the opposite side of the base **11** of the first surface **11***a* into the sensor pattern section **13**. Note that the metal sheet **19** may be adhered so as to cover not the entire surface of the base **11** on the side opposite to the first surface **11***a*, but so as to cover only a region of a back surface of the base **11** on the side opposite to the first surface **11***a*, the region corresponding to the region ARa of the sensor pattern section **13**.

As described above, in the position detection sensor **1** according to this embodiment, the sensor pattern section **13** including the X-axis direction loop coils **13**X and the Y-axis direction loop coils **13**Y are formed by use of the coated conducting wires **18**, and the sensor pattern section **13** is fixed between the base **11** and the protection sheet **14** via the adhesive **12**. The position detection sensor **1** can thus be manufactured at low costs.

In addition, in the position detection sensor **1** according to the above-described embodiment, the terminal section **16** in which the terminal conductors **17** are formed in advance is formed on the first surface **11***a* of the base **11**, and the tip portions **18**Ea of the both end portions **18**E of the coated conducting wires **18** of the loop coils of the sensor pattern section **13** are positioned so as to be capable of being connected to the corresponding terminal conductors **17** in the terminal section **16**. Thus, the tip portions **18**Ea can be easily electrically connected to the corresponding terminal conductors **17** in the terminal section **16** through, for example, soldering.

Therefore, the position detection sensor **1** according to this embodiment, in which the electrode conductors are formed by use of the coated conducting wires **18**, can be provided at low costs and has a simple configuration, and can be very easily connected to an external circuit through use of the terminal section **16**.

In this embodiment, a circuit board **22** is connected to the terminal section **16** via a flexible board **21**. In this case, the flexible board **21** has formed thereon conductive patterns **21***a* each electrically connected to a corresponding one of the terminal conductors **17** in the terminal section **16**. Specifically, one end of each of the conductive patterns **21***a* is electrically connected to the corresponding terminal conductor **17** in the terminal section **16**, while another end thereof is electrically connected to a corresponding one of terminal conductors (not depicted in the figures) in a connector terminal section of the circuit board **22**. A position detection circuit as described below is formed on the circuit board **22**.

Then, as illustrated in FIGS. **2**A and **2**B, the position detection sensor **1** is configured such that the base **11** is bent at the bendable region ARc and folded over to the side opposite to the side on which the first surface **11***a* lies, so that, in this embodiment, the terminal section **16**, the flexible board **21**, and the circuit board **22** are positioned on the

opposite side of the base **11** with respect to the first surface **11***a*. Note that FIG. **2**A, which is a diagram for clarifying a state in which the position detection sensor **1** is bent as illustrated in FIG. **2**B, is the same diagram as FIG. **1**B.

Accordingly, the region ARb of the terminal section **16** and a large part of the bendable region ARc of the base **11** are positioned on the opposite side of the base **11** with respect to the first surface **11***a*, so that, substantially, only the sensor pattern section **13** lies on the side of the base **11** on which the first surface **11***a* lies. This leads to a reduction in the size of a frame region when the position detection sensor **1** according to this embodiment is disposed so as to overlap or coincide with a display screen of a display device.

In this case, the both end portions **18**E of each of the X-axis direction loop coils **13**X and the Y-axis direction loop coils **13**Y of the sensor pattern section **13** are arranged to extend, across the bendable region ARc, up to the region ARb of the terminal section **16**, and are electrically connected to the terminal section **16**. In this case, if the both end portions **18**E of each of the X-axis direction loop coils **13**X and the Y-axis direction loop coils **13**Y are arranged to extend in a straight line, across the bendable region ARc, up to the region ARb of the terminal section **16**, a portion of each of the both end portions **18**E which extends in the bendable region ARc may not have an extra room portion, and a bending stress generated when the terminal section **16** is bent to the side opposite to the side of the base **11** on which the first surface **11***a* lies might cause poor electrical connection between the tip portion **18**Ea of the both end portions **18**E and the corresponding terminal conductor **17** in the terminal section **16**, or may cause a break in the coated conducting wire **18**.

In view of this point, in this embodiment, the both end portions **18**E of each of the X-axis direction loop coils **13**X and the Y-axis direction loop coils **13**Y are not disposed to join the sensor pattern section **13** and the terminal section **16** in a straight line, but are disposed so as to be extensible (extendable) in the bendable region ARc between the terminal section **16** and the sensor pattern section **13**.

That is, in this embodiment, within the range of the bendable region ARc between the terminal section **16** and the sensor pattern section **13**, the both end portions **18**E of each of the X-axis direction loop coils **13**X and the Y-axis direction loop coils **13**Y are arranged to have extra room portions formed by non-straight portions in the bendable region ARc, and are thus disposed so as to be extensible in the bendable region ARc.

In the embodiment illustrated in FIGS. **1**A and **1**B, the extra room portions formed by the non-straight portions are formed by extra wound (looped) portions **18**Eb and **18**Ec obtained by winding (looping) portions of the both end portions **18**E of the coated conducting wire **18** of each of the X-axis direction loop coils **13**X and the Y-axis direction loop coils **13**Y in the bendable region ARc into coils having one or more turns. As described below, in this embodiment, each of the extra wound portions **18**Eb and **18**Ec is formed by winding the coated conducting wire around a guide pin that is used when patterns of the X-axis direction loop coils **13**X and the Y-axis direction loop coils **13**Y are formed on the sensor pattern section **13**.

As described above, the both end portions **18**E of each of the X-axis direction loop coils **13**X and the Y-axis direction loop coils **13**Y are disposed and formed so as to have the extra wound portions **18**Eb and **18**Ec, which are extensible in the bendable region ARc between the terminal section **16** and the sensor pattern section **13**. Accordingly, even when the base **11** of the position detection sensor **1** according to this embodiment is bent at the bendable region ARc to the side opposite to the side of the base **11** on which the first surface **11***a* lies, the coated conducting wire **18** at the both end portions **18**E of each of the X-axis direction loop coils **13**X and the Y-axis direction loop coils **13**Y in the bendable region ARc is provided with a margin against a bending stress thanks to the extra wound portions **18**Eb and **18**Ec. This helps to prevent poor electrical connection between the tip portion **18**Ea of the both end portions **18**E and the corresponding terminal conductor **17** in the terminal section **16**, and prevent a break in the coated conducting wire **18**.

Position Detection Circuit That Uses Position Detection Sensor According to Embodiment

Next, an example configuration of a position detection circuit **200** which employs the electromagnetic induction method and which is formed on the circuit board **22** of the position detection sensor **1** according to the above-described embodiment will be described below with reference to FIG. **3**. As illustrated in FIG. **3**, a pen-type position indicator **3**, which is used together with the position detection sensor **1** according to this embodiment, incorporates a resonant circuit including a coil **31** and a capacitor **32** connected in parallel with the coil **31**.

In the example of FIG. **3**, the X-axis direction loop coils **13**X are made up of n rectangular loop coils $\mathbf{13}X_1$ to $\mathbf{13}X_n$ (where n is an integer equal to or greater than two) arranged in the X-axis direction, while the Y-axis direction loop coils **13**Y are made up of m loop coils $\mathbf{13}Y_1$ to $\mathbf{13}Y_m$ (where m is an integer equal to or greater than two) arranged in the Y-axis direction.

In the example of FIG. **3**, the position detection circuit **200** includes a selection circuit **201**, an oscillator **202**, a current driver **203**, a transmission/reception switching circuit **204**, a receiving amplifier **205**, an indicated position detection circuit **206**, and a process control section **207**.

The selection circuit **201** selects the plurality of X-axis direction loop coils **13**X and the plurality of Y-axis direction loop coils **13**Y one after another, and causes the selected loop coil to transmit a signal to the position indicator **3** and receive a signal returned from the position indicator **3**.

The transmission/reception switching circuit **204**, which is controlled by the process control section **207** to perform switching, is connected to the selection circuit **201**. When the transmission/reception switching circuit **204** is connected to a transmission-side terminal T, an alternating-current signal is supplied from the oscillator **202** to the selection circuit **201**, while, when the transmission/reception switching circuit **204** is connected to a reception-side terminal R, a signal from the selection circuit **201** is supplied to the indicated position detection circuit **206** via the receiving amplifier **205**.

The indicated position detection circuit **206** detects induced voltages, i.e., reception signals, generated in the loop coils of the position detection sensor **1**, converts the detected output signals to digital signals, and outputs the digital signals to the process control section **207**. The process control section **207** calculates coordinate values of a position indicated by the position indicator **3** in the X-axis direction and the Y-axis direction on the basis of the digital signals from the indicated position detection circuit **206**, i.e., the level of the voltage value of the induced voltage generated in each loop coil.

Method for Manufacturing Position Detection Sensor **1** According to Embodiment

Next, a method for manufacturing the position detection sensor **1** according to an embodiment of this disclosure will now be described below. FIGS. **4** and **5** are diagrams for

explaining the method for manufacturing the position detection sensor **1** according to an embodiment. FIG. **4** is a diagram illustrating an example structure of an apparatus for manufacturing the position detection sensor which employs the manufacturing method according to this embodiment. The apparatus for manufacturing the position detection sensor according to this embodiment includes a wire feeding unit **100**, a preprocessing unit **110**, and a wiring unit **120**.

The wiring unit **120** includes a workbench **121** for forming the position detection sensor **1**, and a two-axis moving wiring instrument **122** provided on the workbench **121**. The two-axis moving wiring instrument **122** includes a moving bridge **1221** capable of sliding in the X-axis direction (see the direction indicated by arrows Ax in FIG. **4**) of the position detection sensor **1**, and a wiring nozzle mechanism **1222** capable of sliding in the Y-axis direction (see the direction indicated by an arrow Ay in FIG. **4**) of the position detection sensor **1**.

The moving bridge **1221** includes two leg portions **1221***a* and **1221***b*, and a bridging portion **1221***c* that extends between the two leg portions **1221***a* and **1221***b* so as to span the position detection sensor **1** in a direction along the Y-axis direction thereof. The two leg portions **1221***a* and **1221***b* of the moving bridge **1221** are mounted on two rails **121***a* and **121***b*, respectively, each extending in the X-axis direction on the workbench **121**, and the moving bridge **1221** slides in the X-axis direction while being guided by the two rails **121***a* and **121***b* with the bridging portion **1221***c* being kept parallel to the Y-axis direction.

The wiring nozzle mechanism **1222** is attached to the bridging portion **1221***c* of the moving bridge **1221** so as to be capable of moving in the direction of bridging (i.e., the Y-axis direction of the position detection sensor **1** (see the direction indicated by the arrow Ay in FIG. **4**)). A wire nozzle **1222***a* is attached to a portion of the wiring nozzle mechanism **1222** which faces a surface of the workbench **121**. A coated conducting wire subjected to preprocessing in the preprocessing unit **110** is drawn out through an outlet of the wire nozzle **1222***a*.

The above configuration enables the wire nozzle **1222***a* to move in any desired direction over a two-dimensional plane of the workbench **121** through the sliding of the moving bridge **1221** in the X-axis direction and the sliding of the wiring nozzle mechanism **1222** in the Y-axis direction in the two-axis moving wiring instrument **122**.

The two-axis moving wiring instrument **122** is provided with a movement control section, which is not depicted in FIG. **4**, and the sliding of the moving bridge **1221** in the X-axis direction and the sliding of the wiring nozzle mechanism **1222** in the Y-axis direction are controlled by the movement control section. In addition, in this embodiment, information as to a locus of movement of the wire nozzle **1222***a* for disposing each of the plurality of X-axis direction loop coils **13**X and each of the plurality of Y-axis direction loop coils **13**Y is stored in advance in the movement control section.

On the basis of the stored information, the movement control section of the two-axis moving wiring instrument **122** controls the sliding of the moving bridge **1221** in the X-axis direction and the sliding of the wiring nozzle mechanism **1222** in the Y-axis direction to control the wire nozzle **1222***a* to move so as to dispose each of the plurality of X-axis direction loop coils **13**X and each of the plurality of Y-axis direction loop coils **13**Y.

A pin table **123**, which has disposed thereon guide pins for guiding the coated conducting wires so as to form the patterns of the X-axis direction loop coils **13**X and the Y-axis direction loop coils **13**Y, is provided on the workbench **121** of the wiring unit **120**.

FIG. **5** is a diagram for explaining an example configuration of the pin table **123**. As illustrated in an upper portion of FIG. **5**, the pin table **123** includes a guide pin mounting plate **1231**, an intermediate plate **1232**, and a release sheet **1233**. In addition, the pin table **123** is formed by joining the guide pin mounting plate **1231**, the intermediate plate **1232**, and the release sheet **1233** together as illustrated in a lower portion of FIG. **5**. Note that a diagram of the pin table **123** in the lower portion of FIG. **5** represents an enlarged view of an area corresponding to an area enclosed by a dashed line in a diagram in the upper portion of FIG. **5**.

The guide pin mounting plate **1231** has mounted thereon a large number of guide pins **124** for guiding the coated conducting wires discharged from the wire nozzle **1222***a* so as to form each of the plurality of X-axis direction loop coils **13**X and each of the plurality of Y-axis direction loop coils **13**Y. In FIG. **5**, the guide pins **124** mounted only on an end portion of the guide pin mounting plate **1231** are depicted for the purpose of illustration, but in actuality, the guide pins **124** are mounted at least at points at which the plurality of X-axis direction loop coils **13**X and the plurality of Y-axis direction loop coils **13**Y are bent.

The intermediate plate **1232** is disposed between the guide pin mounting plate **1231** and the release sheet **1233**, and as illustrated in FIG. **5**, the intermediate plate **1232** includes holes **125** defined at positions corresponding to those of the guide pins **124** mounted on the guide pin mounting plate **1231**.

The release sheet **1233** is disposed on the intermediate plate **1232** adhered to the guide pin mounting plate **1231**. At this time, the guide pins **124** pierce into and through the release sheet **1233**, so that tips of the guide pins **124** project above the release sheet **1233**. Note that, in this embodiment, each guide pin **124** is arranged to have a sharp tip like a tip of a needle.

As described above, the guide pin mounting plate **1231**, the intermediate plate **1232**, and the release sheet **1233** are joined together as illustrated in the lower portion of FIG. **5**, so that the pin table **123**, having the large number of guide pins **124** mounted at predetermined positions, is formed.

Then, with the coated conducting wire drawn out from the wire nozzle **1222***a* of the wiring nozzle mechanism **1222**, each of the plurality of X-axis direction loop coils **13**X and the plurality of Y-axis direction loop coils **13**Y is formed as a predetermined loop coil pattern on the release sheet **1233** of the pin table **123**, so that the sensor pattern section **13** is formed. A surface of the release sheet **1233** has been subjected to a treatment that enables the formed sensor pattern section **13** to be easily separated from the pin table **123**.

Using the apparatus for manufacturing the position detection sensor which has the above-described configuration, the position detection sensor **1** is manufactured by a procedure as described below. Note that the apparatus for manufacturing the position detection sensor illustrated in FIG. **4** performs the manufacture of the position detection sensor **1** based on a sequence control section (not depicted in the figures) performing sequence control of an operation of each of the wire feeding unit **100**, the preprocessing unit **110**, and the wiring unit **120**.

Before an overall flow of steps of the method for manufacturing the position detection sensor according to this embodiment is described, the following describes the positions at which the guide pins **124** required to form one of the Y-axis direction loop coils **13**Y and one of the X-axis

direction loop coils **13**X are disposed on the pin table **123**, and formation of the patterns of these loop coils **13**Y and **13**X with reference to FIG. **6**.

First, the case of the Y-axis direction loop coil **13**Y will be described. As illustrated in FIG. **6**, four guide pins **124***a*, **124***b*, **124***c*, and **124***d* for forming the Y-axis direction loop coil **13**Y in a horizontally oriented rectangular shape, and two guide pins **124***e* and **124***f* for defining the positions at which the both end portions **18**E of the Y-axis direction loop coil **13**Y are led out, are disposed in a region of the pin table **123** to which the region ARa of the sensor pattern section **13** in the base **11** corresponds.

In addition, guide pins **124***g* and **124***h* for forming the extra wound portions **18**Eb and **18**Ec, respectively, which are examples of the extra room portions formed by non-straight portions, are disposed in the bendable region ARc.

As described below, the coated conducting wire **18** is led along the guide pins **124***a* to **124***d*, **124***e*, and **124***f* as illustrated in FIG. **6**, so that the rectangular Y-axis direction loop coil **13**Y is formed in the region ARa of the sensor pattern section **13**, and the both end portions **18**E of the coated conducting wire **18** of the Y-axis direction loop coil **13**Y are arranged to extend from the region ARa of the sensor pattern section **13** across the bendable region ARc to the region ARb of the terminal section **16**.

In this case, as illustrated in FIG. **6**, the both end portions **18**E of the Y-axis direction loop coil **13**Y include a first end portion **18**Es and a second end portion **18**Et, and the position at which the first end portion **18**Es is led out is aligned with the position of the corresponding terminal conductor **17** in the terminal section **16**. Accordingly, when the first end portion **18**Es of the both end portions **18**E of the Y-axis direction loop coil **13**Y is extended in a straight line across the bendable region ARc, the first end portion **18**Es can be connected to the corresponding terminal conductor **17** in the terminal section **16**. However, in this embodiment, the first end portion **18**Es is not arranged to extend in a straight line, but, as illustrated in FIG. **6**, is arranged to have the extra wound portion **18**Eb formed by winding the first end portion **18**Es one or more times around the guide pin **124***g* in the bendable region ARc.

In addition, as illustrated in FIG. **6**, the second end portion **18**Et of the both end portions **18**E of the Y-axis direction loop coil **13**Y is arranged to have the extra wound portion **18**Ec formed by winding the second end portion **18**Et one or more times around the guide pin **124***h* in the bendable region ARc.

Then, in the position detection sensor **1** according to this embodiment, the second end portions **18**Et of the both end portions **18**E of the plurality of Y-axis direction loop coils **13**Y are commonly connected to an earth wire portion GD, which is connected to a terminal conductor connected to an earth electrode in the terminal section **16** as illustrated in FIG. **1**A. The extra wound portion **18**Ec of the second end portion **18**Et is formed in the bendable region ARc between the earth wire portion GD and the position at which the second end portion **18**Et is led out from the sensor pattern section **13**.

Next, in a case of the X-axis direction loop coil **13**X, similarly, as illustrated in FIG. **6**, four guide pins **124***i*, **124***j*, **124***k*, and **124***l* for forming the X-axis direction loop coil **13**X in a vertically oriented rectangular shape, and two guide pins **124***m* and **124***n* for defining the positions at which the both end portions **18**E of the X-axis direction loop coil **13**X are led out, are disposed in the region of the pin table **123** to which the region ARa of the sensor pattern section **13** in the base **11** corresponds.

Then, the coated conducting wire **18** is led along the guide pins **124***i* to **124***l*, **124***m*, and **124***n* as illustrated in FIG. **6**, so that the rectangular X-axis direction loop coil **13**X is formed in the region ARa of the sensor pattern section **13**, and the both end portions **18**E of the coated conducting wire **18** of the X-axis direction loop coil **13**X are arranged to extend from the region ARa of the sensor pattern section **13** across the bendable region ARc to the region ARb of the terminal section **16**.

Then, as illustrated in FIG. **6**, the position at which a first end portion **18**Es of the both end portions **18**E of the X-axis direction loop coil **13**X is led out is aligned with the position of the corresponding terminal conductor **17** in the terminal section **16**, so that the first end portion **18**Es can be connected to the corresponding terminal conductor **17** in the terminal section **16** if the first end portion **18**Es is arranged to extend in a straight line across the bendable region ARc.

Then, as is similarly the case with the Y-axis direction loop coil **13**Y, as illustrated in FIG. **6**, the first end portion **18**Es and a second end portion **18**Et of the both end portions of the X-axis direction loop coil **13**X are arranged to have the extra wound portion **18**Eb and the extra wound portion **18**Ec formed by winding the first end portion **18**Es and the second end portion **18**Et one or more times around guide pins **124***o* and **124***p*, respectively, in the bendable region ARc.

Then, tip portions of the second end portions **18**Et of the both end portions **18**E of the plurality of X-axis direction loop coils **13**X are commonly connected to the earth wire portion GD, which is connected to the terminal conductor **17** connected to the earth electrode in the terminal section **16** as illustrated in FIG. **1**A.

The extra wound portions **18**Eb and **18**Ec, which are formed in the both end portions **18**E of the Y-axis direction loop coils **13**Y and the X-axis direction loop coils **13**X in the bendable region ARc as described above, are pulled out of the guide pins **124***g*, **124***h*, **124***o*, and **124***p* to form hollow coils, and serve as extra room portions that are extensible in the lateral direction of the base **11**. Accordingly, when the base **11** is bent in the bendable region ARc as described above, the extra wound portions **18**Eb and **18**Ec serve as extra extensible portions of the coated conducting wires **18** to prevent the abovementioned problems that could be caused by a bending stress.

Next, the flow of the steps of the method for manufacturing the position detection sensor according to this embodiment will now be described below with reference to a flowchart of FIG. **7**. Note that a process of each of the steps described below is performed under control of the sequence control section of the apparatus for manufacturing the position detection sensor.

First, the sequence control section issues an instruction to the preprocessing unit **100** to draw (pull) the coated conducting wire **18** out of the wire feeding unit **100** (step S**101**). The preprocessing unit **110** performs preprocessing of cutting the coated conducting wire **18** drawn out of the wire feeding unit **100** to a length that matches that of the X-axis direction loop coil **13**X or the Y-axis direction loop coil **13**Y, and removing coatings of the tip portions **18**Ea of the both end portions **18**E of the X-axis direction loop coil **13**X or the Y-axis direction loop coil **13**Y to expose the conducting wire. Then, the preprocessing unit **110** sends the coated conducting wire **18** subjected to the preprocessing to the wiring nozzle mechanism **1222** of the wiring unit **120** (step S**102**).

By use of the movement control section of the two-axis moving wiring instrument **122**, the wiring unit **120** controls

the wire nozzle **1222***a* of the wiring nozzle mechanism **1222** to move so as to form the X-axis direction loop coil **13**X or the Y-axis direction loop coil **13**Y and form the extra room portions, in this example, the extra wound portions **18**Eb and **18**Ec, in the both end portions **18**E of the X-axis direction loop coil **13**X or the Y-axis direction loop coil **13**Y in the bendable region ARc while guiding the coated conducting wire **18** along the guide pins on the pin table **123** (step S**103**).

In this case, as illustrated in FIG. **8**, the tip portions **18**Ea of the both end portions **18**E of the X-axis direction loop coil **13**X or the Y-axis direction loop coil **13**Y, where the conducting wire is exposed due to the removal of the coatings of the coated conducting wire **18**, are arranged to project from the pin table **123** in the lateral direction (i.e., the X-axis direction) of the base **11**. In addition, as a result of the coated conducting wire **18** being guided by the guide pins **124**, the tip portion **18**Ea of the both end portions **18**E is positioned so as to be positioned on the corresponding terminal conductor **17** in the terminal section **16** as described above with reference to FIGS. **1**A and **1**B.

After the formation of the X-axis direction loop coil **13**X or the Y-axis direction loop coil **13**Y is finished, the sequence control section determines whether formation of all of the plurality of X-axis direction loop coils **13**X and the plurality of Y-axis direction loop coils **13**Y on the pin table **123** is completed to form the sensor pattern section **13** (step S**104**).

If it is determined at step S**104** that the sensor pattern section **13** has not been formed yet, the sequence control section returns control to step S**101**, and performs control such that the processes of steps S**101** to S**103** will be performed with respect to each of the plurality of X-axis direction loop coils **13**X and the plurality of Y-axis direction loop coils **13**Y.

If it is determined at step S**104** that the sensor pattern section **13** has been completed (fully formed), as illustrated in FIG. **8**, the base **11** is placed over and pressed against the sensor pattern section **13** on the pin table **123** with the adhesive **12** inserted therebetween, which may be a double-sided tape for example, so that the sensor pattern section **13** on the pin table **123** is adhered to the base **11** via the adhesive **12** (step S**105**).

In this case, as illustrated in FIG. **8**, the surface **11***a* of the base **11**, which faces the pin table **123**, has formed thereon and adhered thereto in advance the terminal section **16** on which the terminal conductors **17** (which are not depicted in FIG. **8**; see FIGS. **1**A and **1**B) are formed. In this embodiment, as illustrated in FIGS. **1**A and **1**B, the base **11** has the region ARb in which the terminal section **16** is formed, the bendable region ARc, and the region ARa of the sensor pattern section **13** (see regions indicated by dashed lines in FIG. **8**).

In this embodiment, the double-sided tape that forms the adhesive **12** is arranged to have a size corresponding to the size of the region ARa of the sensor pattern section **13**, and in this example, the adhesive **12** is positioned so as not to lie over the bendable region ARc or the region ARb in which the terminal section **16** is formed. Then, the base **11** is positioned such that the sensor pattern section **13** on the pin table **123** is aligned with the region ARa of the sensor pattern section **13**, and is pressed against the pin table **123** with the adhesive **12** inserted therebetween.

The positioning of the base **11** and the double-sided tape as the adhesive **12** is performed by use of predetermined ones of the guide pins **124** (for example, guide pins **124** corresponding to four corners of the region ARa) which are projecting above the pin table **123**. Note that the adhesive **12** may be adhered to the region ARa of the base **11** in advance.

Meanwhile, as illustrated in FIG. **8**, in the sensor pattern section **13** on the pin table **123**, the both end portions **18**E of each of the plurality of X-axis direction loop coils **13**X and the plurality of Y-axis direction loop coils **13**Y are led out onto the bendable region ARc, and are arranged to project from the region ARa of the sensor pattern section **13** across the bendable region ARc toward the terminal section **16** such that the tip portion **18**Ea of the both end portions **18**E, where the conducting wire is exposed, can be connected to the corresponding terminal conductor **17** in the terminal section **16**.

When the first surface **11***a* of the base **11** is positioned and pressed against the pin table **123** as described above, the guide pins **124** pierces into and through the base **11**, and the sensor pattern section **13** is adhered to the region ARa of the base **11** via the adhesive **12**. In addition, as illustrated in FIG. **9**, the tip portion **18**Ea of the both end portions **18**E of each of the plurality of X-axis direction loop coils **13**X and the plurality of Y-axis direction loop coils **13**Y, where the conducting wire is exposed due to the removal of the coating of the coated conducting wire **18**, is positioned on the corresponding terminal conductor **17** in the terminal section **16**.

Once the sensor pattern section **13** is thus adhered to the first surface **11***a* of the base **11** via the adhesive **12**, the base **11** is separated from the pin table **123** (step S**106**). In this case, by use of a lifting mechanism that involves use of a robot hand (not depicted) or the like, the base **11** is lifted off the guide pin mounting plate **1231** together with the intermediate plate **1232** and the release sheet **1233**, and is thus removed from the guide pins **124**. Note that, instead of the base **11** being lifted together with the intermediate plate **1232** and the release sheet **1233**, the guide pin mounting plate **1231** may be lowered by a distance equal to or greater than the height of the guide pins, with the base **11** being held by a robot hand (not depicted) or the like together with the intermediate plate **1232** and the release sheet **1233**, to remove the base **11** from the guide pins **124**.

After being removed from the guide pins **124**, the base **11** having the release sheet **1233** attached thereto is turned upside down, and is mounted on a table (not depicted) different from the pin table **123**. Then, the release sheet **1233** is removed from the sensor pattern section **13** adhered to the first surface **11***a* of the base **11**.

The first surface **11***a* of the base **11**, which has been removed from the pin table **123** as described above, has the sensor pattern section **13** adhered thereto, and as described above, the tip portion **18**Ea of the both end portions **18**E of each of the plurality of X-axis direction loop coils **13**X and the plurality of Y-axis direction loop coils **13**Y, where the conducting wire is exposed due to the removal of the coating of the coated conducting wire **18**, is positioned on the corresponding terminal conductor **17** in the terminal section **16**.

As illustrated in FIG. **9**, in this embodiment, a solder **17***a* is applied in advance onto each of the terminal conductors **17** in the terminal section **16** on the first surface **11***a* of the base **11**. Then, in this embodiment, the solder **17***a* on each of the terminal conductors **17** in the terminal section **16** is heated and melted to solder and electrically connect the corresponding tip portion **18**Ea of the both end portions **18**E, where the conducting wire is exposed due to the removal of the coating of the coated conducting wire **18**, to the terminal conductor **17** in the terminal section **16** (step S**107**).

Next, in this embodiment, the protection sheet **14** (see FIGS. **1**A and **1**B) is adhered onto the sensor pattern section **13** in the region ARa of the first surface **11***a* of the base **11** via an adhesive so as to cover the sensor pattern section **13** (step S**108**). Next, in this embodiment, the metal sheet **19**, which forms the electromagnetic shielding layer, is adhered to the surface of the base **11** on the side opposite to the first surface **11***a* (step S**109**).

Then, in this embodiment, the flexible board **21** is attached to the terminal section **16** to connect each of the terminal conductors **17** in the terminal section **16** to the connector terminal section of the circuit board **22** (step S**110**).

The position detection sensor **1** according to this embodiment can be manufactured in the above-described manner. Then, when the position detection sensor **1** according to this embodiment is disposed on a rear side of a display screen of an input device so as to overlap or coincide with the display screen, for example, the position detection sensor **1** is bent in the bendable region ARc as described above.

Note that an adhesive separate from the adhesive **12** may be used for the adhesion of the protection sheet **14**. Also, portions of the adhesive **12** lying on the sensor pattern section **13** (more specifically, portions of the adhesive **12** which lie in portions of the region of the sensor pattern section **13** where the coated conducting wires forming the loop coil patterns do not exist) may be used to adhere the protection sheet **14** to the first surface **11***a* of the base **11**.

As described above, the method for manufacturing the position detection sensor according to this embodiment is capable of manufacturing the position detection sensor **1** such that the sensor pattern section **13** is easily disposed on the first surface **11***a* of the base **11** by use of the coated conducting wires, and electrical connection between the terminal conductors **17** in the terminal section **16** and the corresponding loop coils in the sensor pattern section **13** is easily achieved. Moreover, use of the manufacturing method according to this embodiment makes it possible to mass-produce the position detection sensors **1**.

Other Examples of Extra Room Portions in Bendable Region ARc

In the position detection sensor **1** according to the above-described embodiment, the extra room portions formed by the non-straight portions of the coated conducting wires in the bendable region ARc are the extra wound portions **18**Eb and **18**Ec formed in the both end portions **18**E of each of the X-axis direction loop coils **13**X and the Y-axis direction loop coils **13**Y. Note, however, that the extra room portions formed by the non-straight portions in the bendable region ARc are not limited to this example.

FIGS. **10**A, **10**B, and **11** are diagrams for explaining a position detection sensor **1**A according to an embodiment of this disclosure, which is different from the position detection sensor **1** according to the above-described embodiment in the configuration of the extra room portions formed by the non-straight portions in the bendable region ARc. In this embodiment, the extra room portions are bent portions formed in the both end portions **18**E of each of the X-axis direction loop coils **13**X and the Y-axis direction loop coils **13**Y.

FIGS. **10**A and **10**B are diagrams corresponding to FIGS. **1**A and **1**B, which illustrate the position detection sensor **1** according to the above-described embodiment. FIG. **10**A is a diagram illustrating a surface of the position detection sensor **1**A on which the sensor pattern section **13** is formed as viewed in a direction perpendicular to that surface. FIG. **10**B is a schematic diagram illustrating the configuration of a cross-section of the position detection sensor **1**A. FIG. **11** is a diagram corresponding to FIG. **6**, which illustrates the position detection sensor **1** according to the above-described embodiment, and FIG. **11** illustrates formation of patterns of one of the Y-axis direction loop coils **13**Y and one of the X-axis direction loop coils **13**X, and formation of the extra room portions in the bendable region ARc.

Portions of the position detection sensor **1**A according to this embodiment which have their equivalents in the position detection sensor **1** according to the above-described embodiment are denoted by the same reference signs as those of their equivalents in the position detection sensor **1**, and detailed descriptions thereof will be omitted.

As illustrated in FIGS. **10**A, **10**B, and **11**, the position detection sensor **1**A according to this embodiment is similar to the position detection sensor **1** according to the above-described embodiment in the configurations of the portions that form the rectangular loop coil patterns of the Y-axis direction loop coils **13**Y and the X-axis direction loop coils **13**X and the configuration of the terminal section **16**.

Regarding the position detection sensor **1**A according to this embodiment, two guide pins **124***q* and **124***r* and two guide pins **124***s* and **124***t* are disposed in the bendable region ARc for forming bent portions **18**Ed in the first end portion **18**Es and the second end portion **18**Et of the both end portions **18**E of each of the Y-axis direction loop coils **13**Y and the X-axis direction loop coils **13**X.

Then, as illustrated in FIG. **11**, the first end portion **18**Es and the second end portion **18**Et of the both end portions **18**E of each of the Y-axis direction loop coils **13**Y and the X-axis direction loop coils **13**X are led along the guide pins **124***q*, **124***r*, **124***s*, and **124***t* to form the bent portions **18**Ed, each formed of a bent line, in the bendable region ARc.

Note that, in a case of this embodiment, as illustrated in FIG. **11**, guide pins **124***u* and **124***v* are disposed at positions at which the both end portions **18**E of the X-axis direction loop coil **13**X are led out from the sensor pattern section **13** into the bendable region ARc. The position detection sensor **1**A is otherwise similar in configuration to the position detection sensor **1** according to the above-described embodiment.

When pulled out off the pin table **123**, the bent portions **18**Ed formed in the both end portions **18**E of each of the Y-axis direction loop coils **13**Y and the X-axis direction loop coils **13**X in the bendable region ARc as described above cause slack in the bendable region ARc, and serve as extra room portions that are extensible in the lateral direction of the base **11**. Accordingly, when the base **11** is bent in the bendable region ARc as described above, the bent portions **18**Ed serve as extra extensible portions of the coated conducting wire **18** to prevent the abovementioned problems that could be caused by a bending stress.

Note that the extra room portions formed by non-straight portions of the coated conducting wire in the bendable region ARc are not limited to the extra wound portions or the bent portions in the embodiments as described above, but may be portions in any desirable configuration as long as the portions serve as extra room portions that are extensible in a direction in which a stress is applied when the base **11** is bent, e.g., the lateral direction of the base **11** in this embodiment.

<Method for Manufacturing Position Detection Sensor According to Another Embodiment>

In the method for manufacturing the position detection sensor according to the above-described embodiment, the

pin table **123** having the guide pins **124** mounted thereon is used. Note, however, that each of the position detection sensor **1** and the position detection sensor **1**A can also be formed without use of the pin table **123**.

In a method for manufacturing the position detection sensor according to another embodiment of this disclosure, a layer of the adhesive **12** is provided on the first surface **11***a* of the base **11**, and the terminal section **16** and the sensor pattern section **13** are disposed on the layer of the adhesive **12** by use of a wiring nozzle mechanism. A wiring nozzle mechanism of a wiring unit used in this case does not form each of the loop coil patterns by leading a coated conducting wire along guide pins, but forms each of the loop coil patterns by moving a wire nozzle while pressing the coated conducting wire **18** against the adhesive **12** on the first surface **11***a* of the base **11**. A configuration to achieve such adhesion method is well known, and therefore a description thereof is omitted. Also in the bendable region ARc, the extra room portions formed of non-straight portions may be formed while pressing the coated conducting wire **18**. The method according to this embodiment is otherwise similar to the method for manufacturing the position detection sensor according to the above-described embodiment.

In the method for manufacturing the position detection sensor according to the other embodiment described above, the coated conducting wire is adhered to the layer of the adhesive after the layer of the adhesive is applied onto the base **11**. Note, however, that a coated conducting wire having an adhesive attached thereto that can be melted through heat, for example, may be used instead of applying the adhesive layer onto the base, and the coated conducting wire may be adhered onto the base while the adhesive of the coated conducting wire is melted through heat. Note, however, that the both end portions **18**E in the bendable region ARc are not adhered to the first surface **11***a* of the base **11**.

Other Embodiments or Modifications

In the position detection sensor **1** according to the above-described embodiment, the terminal section **16** includes the board which is in the shape of a sheet or a film and which is made of an insulating material, e.g., PET, and which includes the terminal conductors **17**, e.g., copper foil patterns, to be electrically connected to the corresponding electrode conductors of the sensor pattern section **13** formed on the board through printing or the like, wherein the terminal section **16** is adhered onto the base **11** via the adhesive. Note, however, that the above configuration of the terminal section **16** and the above method of forming the terminal section **16** on the base **11** are mere examples, and should not be construed as limiting the disclosure. For example, the terminal conductors **17** formed by copper foil patterns, for example, may be directly formed on the first surface **11***a* of the base **11** through printing or the like to form the terminal section.

In addition, in the above-described embodiment, only the terminal conductors **17** are formed in the terminal section **16**, and the circuit board **22** is connected to the terminal section **16** via the flexible board **21**. Note, however, that the circuit elements of the position detection circuit **200** illustrated in FIG. **3** may be provided in the terminal section **16**, or the position detection circuit **200** as an integrated circuit may be provided in the terminal section **16**. In a case where the circuit elements of the position detection circuit **200** are provided in the terminal section **16**, or the position detection circuit **200** as an integrated circuit is provided in the terminal section **16**, it may be sufficient if a connection terminal for input and output to and from the process control section **207** and a connection terminal for power supply are provided as terminals used for connection between the terminal section **16** of the position detection sensor **1** or **1**A and external devices.

In addition, in the above-described embodiment, the protection sheet **14** is adhered so as to cover only the sensor pattern section **13**. Note, however, that the protection sheet **14** may alternatively be adhered so as to cover not only the sensor pattern section **13** but also the terminal section **16**. In this case, however, conductors in the terminal section **16** which are used for connection between the position detection sensor **1** and external devices are not covered with the protection sheet **14**.

In the manufacturing method according to the above-described embodiment, the soldering of the both end portions of each of the plurality of X-axis direction loop coils **13**X and the plurality of Y-axis direction loop coils **13**Y to the terminal conductors **17** in the terminal section **16** is performed before the protection sheet **14** is adhered so as to cover the sensor pattern section **13**. Note, however, that the soldering at the terminal section **16** may alternatively be performed after the sensor pattern section **13** is covered with the protection sheet **14**.

Further, in the above-described embodiment, the both end portions of each of the plurality of X-axis direction loop coils **13**X and the plurality of Y-axis direction loop coils **13**Y are electrically connected to the corresponding terminal conductors **17** in the terminal section **16** through soldering. However, in a case where the terminal conductors **17** in the terminal section **16** are covered with the protection sheet via an adhesive, the tip portion **18**Ea of the both end portions **18**E of each of the plurality of X-axis direction loop coils **13**X and the plurality of Y-axis direction loop coils **13**Y is held down by the protection sheet while being in contact with the corresponding terminal conductor **17**, and therefore, the soldering process may be omitted.

Furthermore, in the above-described embodiment, the position detection sensor has a rectangular external shape, but the external shape of a position detection sensor according to the other embodiment of this disclosure need not be rectangular but may be any desirable shape. Furthermore, the base may be either planar or in the shape of a curved surface. Furthermore, needless to say, the shape of the patterns of the loop coils is not limited to the rectangular shape as in the above-described embodiment.

Furthermore, the plurality of loop coils are not necessarily arranged in both the X-axis direction and the Y-axis direction as in the above-described embodiment, but may alternatively be arranged only in one direction.

Furthermore, in the above-described method for manufacturing the position detection sensor, before the sensor pattern section is formed by the coated conducting wires by use of the wiring unit **120**, in the preprocessing unit **110**, the coatings of portions of the coated conducting wire which form end portions of the electrode conductor are removed to expose the conducting wire therein according to the pattern of the electrode conductor.

However, it may be sufficient if the end portions of the patterns of the electrode conductors are properly positioned with respect to the corresponding terminal conductors in the terminal section **16**, and therefore, it is not essential, in the preprocessing unit **110**, to remove the coatings of the portions of the coated conducting wire which form the end portions of the pattern of the electrode conductor before the process of forming the sensor pattern section is performed. For example, a process of removing the coatings of the

portions of the coated conducting wire which correspond to the both end portions **18**E of each of the patterns of the plurality of electrode conductors of the sensor pattern section **13** may be performed after the sensor pattern section **13** is formed. Alternatively, the portions of the coated conducting wire **18** which correspond to the both end portions **18**E of the pattern of the electrode conductor may be positioned with respect to the corresponding terminal conductors **17** in the terminal section **16**, and be heated to thereby melt and remove coatings of the coated conducting wire **18** to expose the conducting wire, and the exposed conducting wire may be electrically connected to the terminal conductors **17** through solders applied onto the terminal conductors **17**.

In the method for manufacturing the position detection sensor according to the above-described embodiment, the wiring nozzle mechanism of the wiring unit is caused to move on a two-dimensional plane to form the coated conducting wire in the predetermined pattern of the electrode conductor. Note, however, that a plurality of coated conducting wires formed in the predetermined patterns of the electrode conductors (including the extra room portions in the bendable region ARc) may be prepared in advance, and the electrode conductors formed in the predetermined patterns may be adhered onto the base **11** via the adhesive.

In this case, the electrode conductors formed in the predetermined patterns may be adhered onto the base **11** one by one, or alternatively, a plurality of electrode conductors formed in the predetermined patterns and adhered to each other in advance (which may be either all or some of the electrode conductors of the sensor pattern section) may be adhered onto the base **11**. In addition, an adhesive may be applied onto the base **11** in advance, or alternatively, an adhesive (which may be a thermoplastic adhesive, and may be an adhesive applied to the coated conducting wire) attached to the coating of the coated conducting wire may be used.

The position detection sensor according to the above-described embodiment is designed for position detection that employs the electromagnetic induction method, and includes the electrode conductors formed as the loop coil patterns. Note, however, that embodiments of the present disclosure are applicable not only to position detection sensors that employ the electromagnetic induction method but also to position detection sensors that employ a capacitive coupling method or any other desirable method.

It is to be noted that the embodiments of the present disclosure are not limited to the foregoing, and that various changes can be made without departing from the principles disclosed herein.

The invention claimed is:

1. A position detection sensor, comprising:

a base made of a flexible material, and having a first surface;

a terminal section having a plurality of terminal conductors disposed therein, and formed on the first surface of the base; and

a sensor pattern section including a plurality of electrode conductors formed of coated conducting wires, arranged in predetermined patterns, and disposed on and adhered to the base via an adhesive in an area that does not overlap with the terminal section on the first surface of the base, wherein end portions of the coated conducting wires of the plurality of electrode conductors are positioned so as to be connectable to corresponding ones of the terminal conductors in the terminal section, wherein

the first surface of the base includes a region of the terminal section, a region of the sensor pattern section, and a bendable region between these two regions wherein the bendable region spans a first distance between these two regions,

the end portions of the plurality of electrode conductors of the sensor pattern section are electrically connected to the plurality of terminal conductors in the terminal section through the bendable region,

each of the plurality of electrode conductors includes a first portion having a length of the first distance and an extra room portion having an additional length, such that the plurality of electrode conductors are extensible in the bendable region between the terminal section and the sensor pattern section, wherein no adhesive is applied to the bendable region, and

the extra room portion includes a wound portion in the bendable region to be extensible in the bendable region.

2. The position detection sensor according to claim **1**, wherein the extra room portion includes a non-straight portion in the bendable region to be extensible in the bendable region.

3. The position detection sensor according to claim **1**, wherein the extra room portion includes a bent portion in the bendable region to be extensible in the bendable region.

4. The position detection sensor according to claim **1**, wherein the plurality of electrode conductors of the sensor pattern section include a first loop coil group including a plurality of loop coils arranged at predetermined intervals in a first direction on the first surface of the base, and a second loop coil group including a plurality of loop coils arranged at predetermined intervals in a second direction perpendicular to the first direction on the first surface of the base, each of the loop coils having a predetermined number of turns of the coated conducting wire.

5. The position detection sensor according to claim **4**, wherein one end of each of the loop coils of the first loop coil group and the second loop coil group of the sensor pattern section is connected to a ground wire in the bendable region.

6. The position detection sensor according to claim **1**, wherein the terminal section is formed on a portion of the base to which a flexible connector board is attached, the flexible connector board having formed thereon a plurality of conductor patterns connected to the terminal conductors in the terminal section.

7. The position detection sensor according to claim **6**, wherein a circuit board is connected to an end portion of the flexible connector board on a side opposite from a side on which the terminal section lies on the base, wherein the circuit board is provided with another terminal section to which the plurality of conductor patterns are connected.

8. The position detection sensor according to claim **7**, wherein the base is bent in the bendable region to a side opposite to a side on which the first surface lies, so that the flexible connector board and the circuit board are positioned on the opposite side of the base with respect to the first surface.

9. The position detection sensor according to claim **1**, wherein the plurality of electrode conductors are not adhered to the base in the bendable region.

10. The position detection sensor according to claim **1**, further comprising:

a metal sheet disposed on a surface of the base on a side opposite to the first surface.

11. The position detection sensor according to claim **1**, wherein the base is formed of a flexible board.

12. The position detection sensor according to claim 1, wherein the base is bent in the bendable region to a side opposite to a side on which the first surface lies, so that the terminal section is positioned on the opposite side of the base with respect to the first surface.

13. The position detection sensor according to claim 1, further comprising:

a protection sheet disposed on the sensor pattern section disposed on the base via the adhesive, the protection sheet attached to the base via the adhesive with the sensor pattern section intervening between the protection sheet and the base.

14. A method for manufacturing a position detection sensor using a base made of a flexible material and including a first surface, wherein the base includes a region of a terminal section having a plurality of terminal conductors formed therein, a region in which a sensor pattern section is formed, and a bendable region between the region of the terminal section and the region of the sensor pattern section wherein the bendable region spans a first distance between these two regions, the method comprising:

a first step of disposing and adhering a plurality of electrode conductors formed of coated conducting wires onto the base via an adhesive in the region of the sensor pattern section such that the electrode conductors are arranged in predetermined patterns, such that end portions of the electrode conductors are positioned so as to be connectable to corresponding ones of the terminal conductors in the terminal section;

a second step of electrically connecting the end portions of the electrode conductors of the sensor pattern section to the corresponding terminal conductors in the terminal section formed on the base in the region of the terminal section; and

a third step of, before or after the first step, and before the second step, performing a process of making each of the plurality of electrode conductors to include a first portion having a length of the first distance and an extra room portion having an additional length, such that the plurality of electrode conductors are extensible in the bendable region between the terminal section and the sensor pattern section, wherein no adhesive is applied to the bendable region and the extra room portion includes a wound portion in the bendable region to be extensible in the bendable region.

15. The method for manufacturing the position detection sensor according to claim 14, further comprising:

a fourth step of, before the first step and the third step, removing coatings of end portions of the coated conducting wires of the plurality of electrode conductors to expose portions of the conducting wires, wherein

in the second step, the exposed portions of the conducting wires of the plurality of electrode conductors of the sensor pattern section are electrically connected to the corresponding terminal conductors in the terminal section.

16. The method for manufacturing the position detection sensor according to claim 14, wherein

in the first step, on a pin mounting plate having guide pins disposed thereon, the plurality of electrode conductors formed of the coated conducting wires are disposed by use of the guide pins such that the electrode conductors are arranged in the predetermined patterns, and the end portions of the electrode conductors are positioned by use of the guide pins so as to be connectable to the corresponding terminal conductors in the terminal section,

in the third step, when each of the electrode conductors is led between the terminal section and the sensor pattern section, the electrode conductor is wound around a guide pin on the pin mounting plate disposed in the bendable region so as to form the extra room portion, and

in the second step, after the sensor pattern section is adhered to the base, the base having the sensor pattern section adhered thereto is separated from the pin mounting plate.

17. The method for manufacturing the position detection sensor according to claim 14, wherein

in the first step, on a pin mounting plate having guide pins disposed thereon, the plurality of electrode conductors formed of the coated conducting wires are disposed by use of the guide pins such that the electrode conductors are arranged in the predetermined patterns, and the end portions of the electrode conductors are positioned by use of the guide pins so as to be connectable to the corresponding terminal conductors in the terminal section,

in the third step, when each of the electrode conductors is led between the terminal section and the sensor pattern section, the electrode conductor is bent by a guide pin on the pin mounting plate disposed in the bendable region so as to form the extra room portion, and

in the second step, after the sensor pattern section is adhered to the base, the base having the sensor pattern section adhered thereto is separated from the pin mounting plate.

18. The method for manufacturing the position detection sensor according to claim 14, wherein the plurality of electrode conductors of the sensor pattern section include a first loop coil group including a plurality of loop coils arranged at predetermined intervals in a first direction on the first surface of the base, and a second loop coil group including a plurality of loop coils arranged at predetermined intervals in a second direction perpendicular to the first direction on the first surface of the base, each of the loop coils having a predetermined number of turns of the coated conducting wire.

* * * * *