US012410324B2

(12) **United States Patent**
Zhang et al.

(10) **Patent No.: US 12,410,324 B2**
(45) **Date of Patent: Sep. 9, 2025**

(54) **FLAME RETARDANT CLEAR COATINGS FOR BUILDING PANELS**

(71) Applicant: **ARMSTRONG WORLD INDUSTRIES, INC.**, Lancaster, PA (US)

(72) Inventors: **Linzhu Zhang**, Pittsburgh, PA (US); **John E. Hughes**, Lincoln University, PA (US); **Michelle X. Wang**, Lititz, PA (US); **Steven L. Masia**, Lancaster, PA (US)

(73) Assignee: **AWI Licensing LLC**, Wilmington, DE (US)

(*) Notice: Subject to any disclaimer, the term of this patent is extended or adjusted under 35 U.S.C. 154(b) by 150 days.

(21) Appl. No.: **17/825,458**

(22) Filed: **May 26, 2022**

(65) **Prior Publication Data**

US 2022/0289987 A1 Sep. 15, 2022

Related U.S. Application Data

(63) Continuation of application No. 15/994,067, filed on May 31, 2018, now Pat. No. 11,365,322.

(Continued)

(51) **Int. Cl.**
C09D 5/18 (2006.01)
B32B 21/00 (2006.01)

(Continued)

(52) **U.S. Cl.**
CPC ***C09D 5/18*** (2013.01); ***B32B 21/00*** (2013.01); ***C09D 7/61*** (2018.01); ***C09D 7/63*** (2018.01); ***C09D 133/06*** (2013.01); ***C09D 175/14*** (2013.01); ***E04B 1/942*** (2013.01); ***E04B 9/045*** (2013.01); ***E04B 9/16*** (2013.01); ***E04B 9/366*** (2013.01); ***E04C 2/526*** (2013.01); *C08F 230/085* (2020.02); *C08K 2003/2227* (2013.01);

(Continued)

(58) **Field of Classification Search**
None
See application file for complete search history.

(56) **References Cited**

U.S. PATENT DOCUMENTS

3,440,201 A 4/1969 Sempert
4,126,473 A 11/1978 Sobolev

(Continued)

FOREIGN PATENT DOCUMENTS

CA 2170323 A1 * 9/1996
CN 1488690 4/2004

(Continued)

OTHER PUBLICATIONS

Calbo, "Coating additives", pp. 194-195, Shanghai Science and Technology literatures Publication, published on May 31, 2000.

Primary Examiner — Tae H Yoon
(74) *Attorney, Agent, or Firm* — Patrick Sheldrake

(57) **ABSTRACT**

Described herein is a barrier coating composition comprising an organic blend comprising a first component and a second component, the first component comprising latex polymer and the second component being selected from polyurethane emulsion, wax emulsion, and alkyd emulsion, wherein the first component and the second component are present in a weight ratio ranging from about 2:1 to about 20:1, and the latex polymer has a glass transition temperature of less than about 18° C.

20 Claims, 8 Drawing Sheets

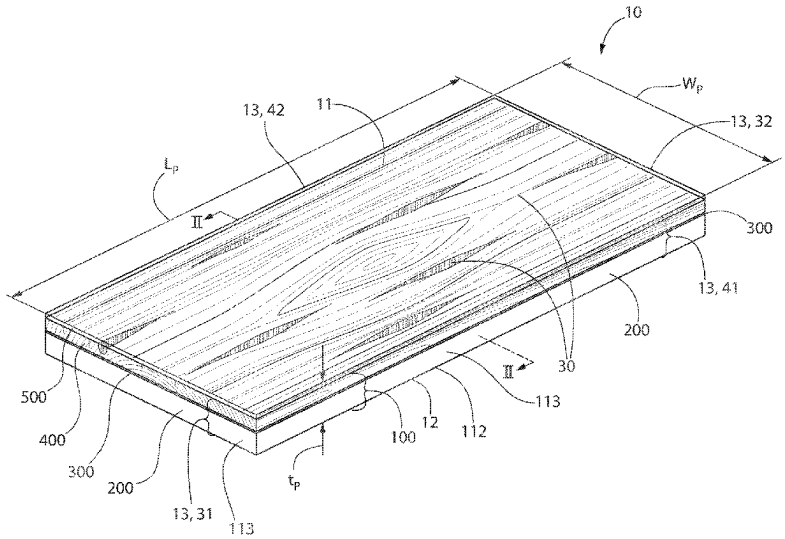

Related U.S. Application Data

(60) Provisional application No. 62/653,897, filed on Apr. 6, 2018, provisional application No. 62/513,115, filed on May 31, 2017, provisional application No. 62/513,126, filed on May 31, 2017.

(51) **Int. Cl.**

C09D 7/61	(2018.01)
C09D 7/63	(2018.01)
C09D 133/06	(2006.01)
C09D 175/14	(2006.01)
E04B 1/94	(2006.01)
E04B 9/04	(2006.01)
E04B 9/16	(2006.01)
E04B 9/36	(2006.01)
E04C 2/52	(2006.01)
C08F 230/08	(2006.01)
C08K 3/22	(2006.01)
C08K 3/38	(2006.01)
E04C 2/26	(2006.01)
E04C 2/296	(2006.01)

(52) **U.S. Cl.**

CPC *C08K 2003/387* (2013.01); *E04C 2/26* (2013.01); *E04C 2/296* (2013.01)

(56) **References Cited**

U.S. PATENT DOCUMENTS

4,888,057	A	12/1989	Nguyen	
8,206,620	B1	6/2012	Bolton	
9,938,401	B2 *	4/2018	de Boer	C08L 53/025
2002/0071867	A1	6/2002	Gebhard	
2004/0002559	A1	1/2004	Troutman	
2004/0180998	A1	9/2004	Gonzales	
2008/0041003	A1	2/2008	Nowak	
2010/0016479	A1	1/2010	Li	
2010/0223878	A1	9/2010	Lipka	
2012/0301622	A1	11/2012	Fang	
2015/0018472	A1	1/2015	Gaston	
2015/0203693	A1 *	7/2015	Mestan	C08L 9/06 428/339
2017/0044391	A1 *	2/2017	Satgurunathan	C09D 125/14

FOREIGN PATENT DOCUMENTS

CN	101472983			7/2009
CN	101891990			8/2012
CN	104341985	A	*	2/2015
CN	104530892	A	*	4/2015
CN	105086791	A	*	11/2015
CN	102212298			5/2016
CN	105713472	A	*	6/2016
EP	3458640	A1		3/2019
EP	3532677	A4		5/2020
GB	1375247		*	11/1974
KR	20140079745	A		6/2014
PT	651039	E	*	4/2000
WO	WO 2007/024699	A2		3/2007
WO	WO 2015/157278	A1		10/2015
WO	WO 2017/109174	A1		6/2017

* cited by examiner

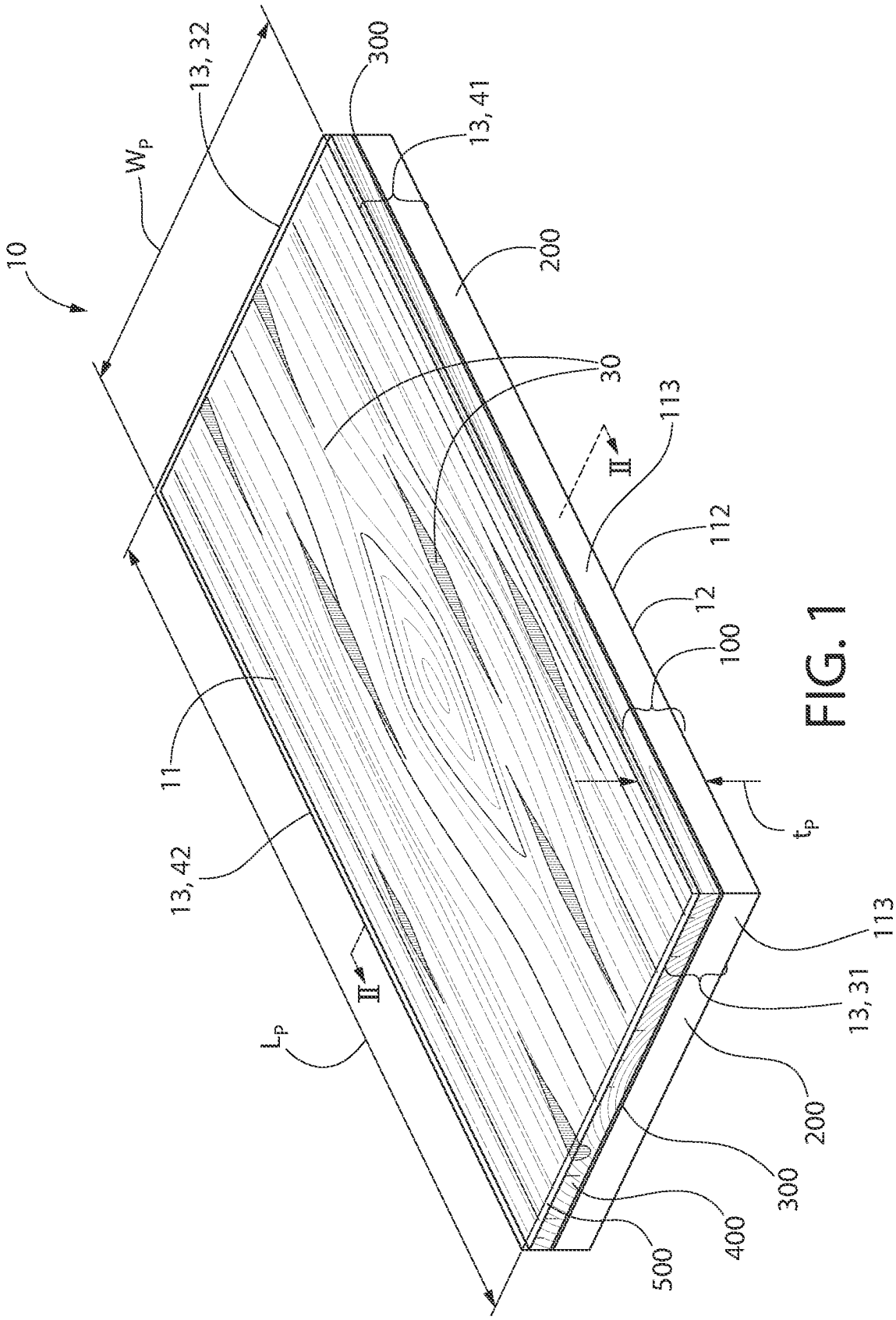
10
W_P
13, 32
300
13, 41
200
30
113
II
112
12
100
11
13, 42
II
L_P
t_P
113
13, 31
200
300
400
500

FIG. 1

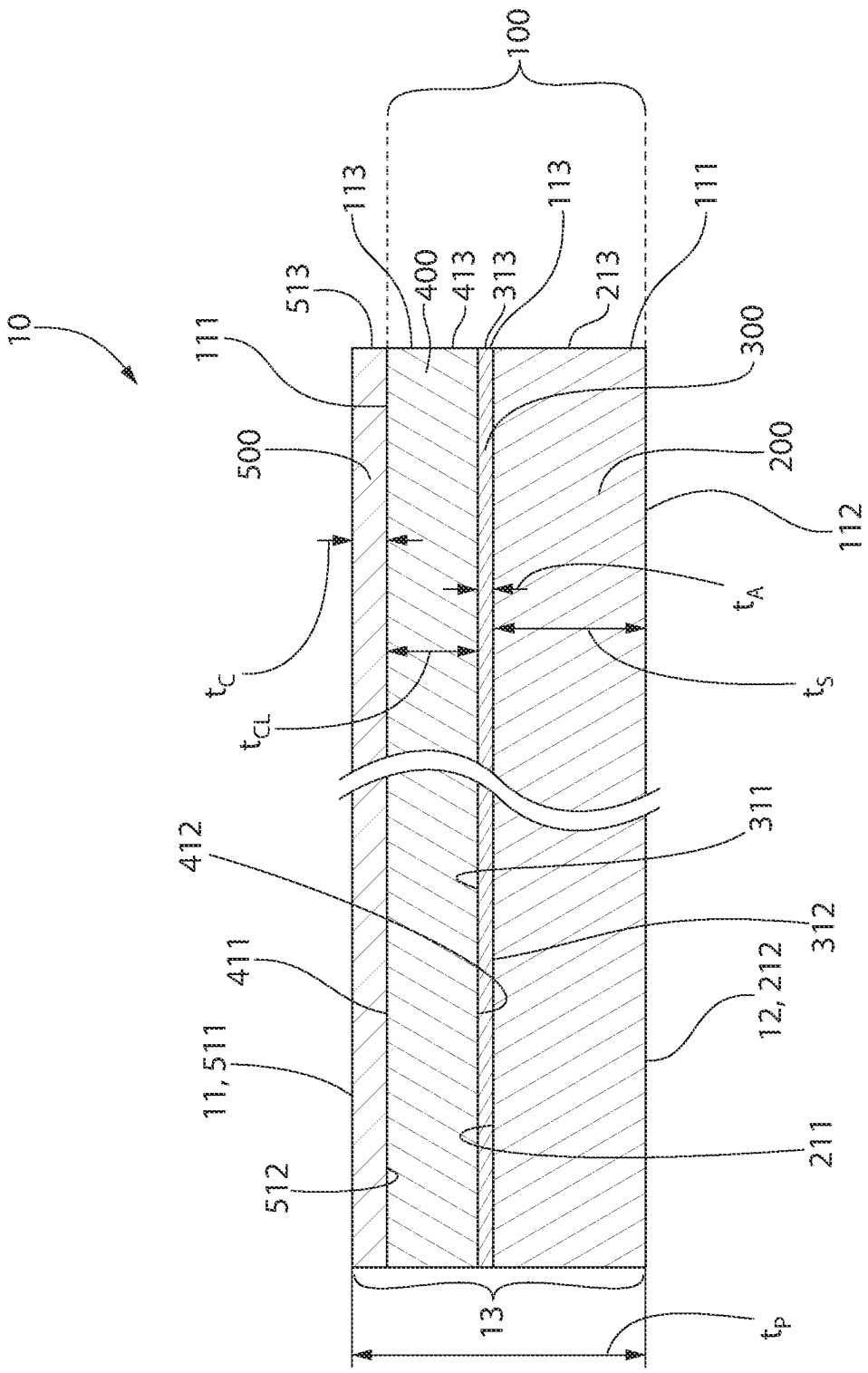
10
100
113
513
400
413
313
113
213
111
111
300
500
200
112
t_C
t_{CL}
t_A
t_S
412
311
312
411
12, 212
11, 511
211
512
13
t_P

FIG. 2

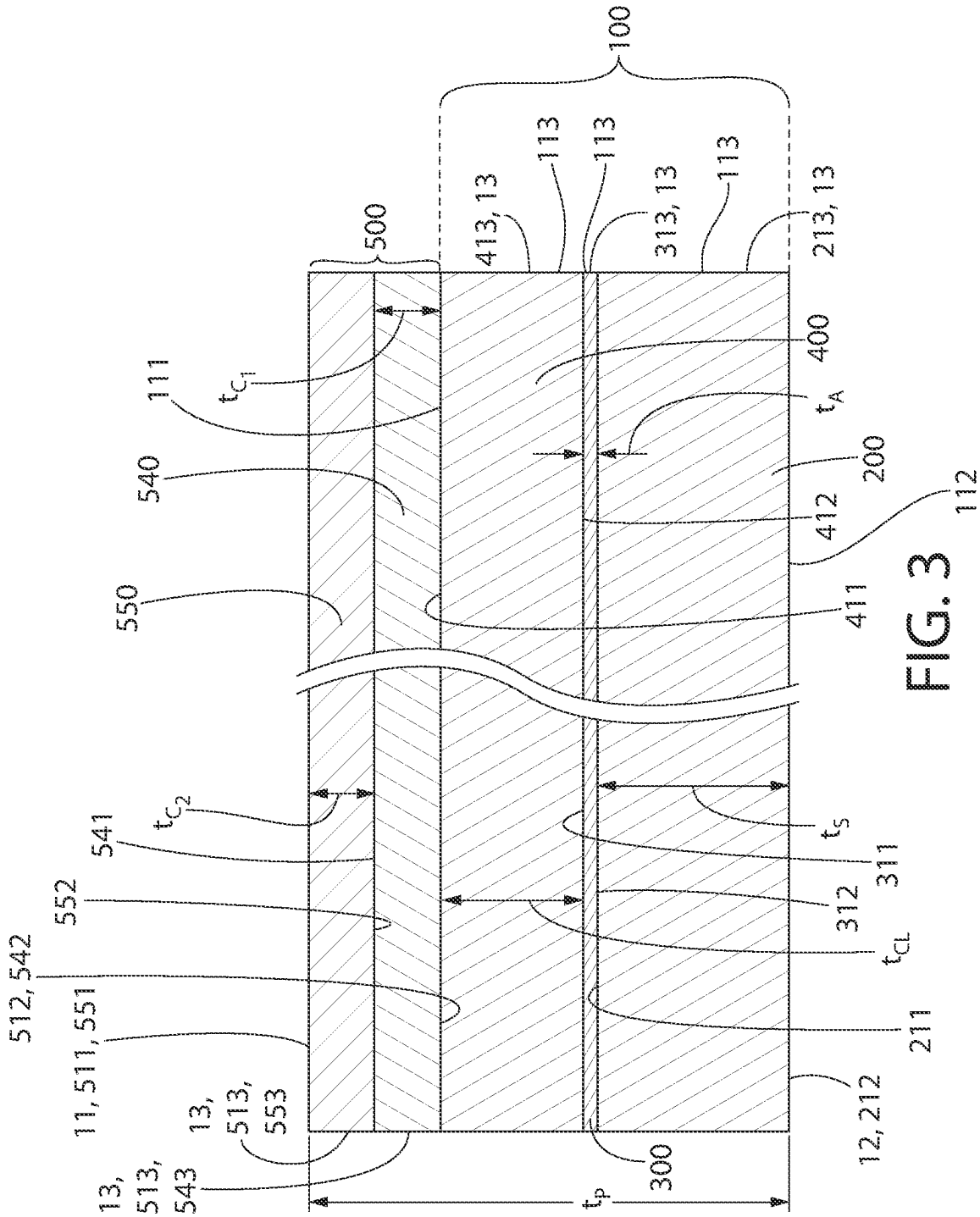
100
500
413, 13
113
113
313, 13
113
213, 13
400
t_{C_1}
111
t_A
540
200
412
112
550
411
t_{C_2}
541
t_S
311
552
312
512, 542
t_{CL}
11, 511, 551
211
13, 513, 553
12, 212
13, 513, 543
300
t_P

FIG. 3

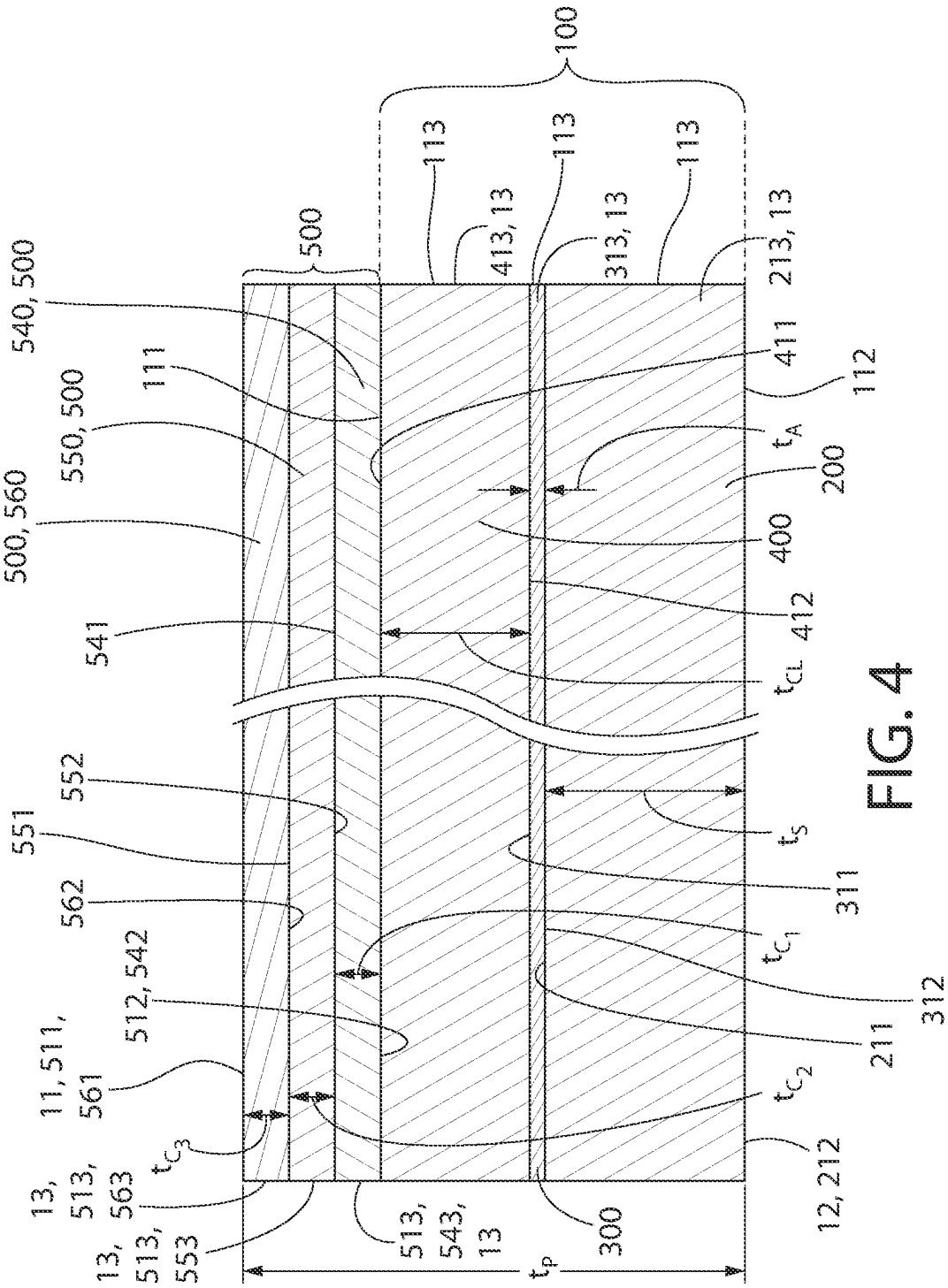
100
500
113
413, 13
113
313, 13
113
213, 13
540, 500
111
411
112
550, 500
t_A
200
500, 560
400
541
412
t_{CL}
552
551
t_S
562
311
t_{C_1}
512, 542
312
11, 511, 561
211
t_{C_2}
t_{C_3}
13, 513, 563
12, 212
13, 513, 553
513, 543, 13
300
t_P

FIG. 4

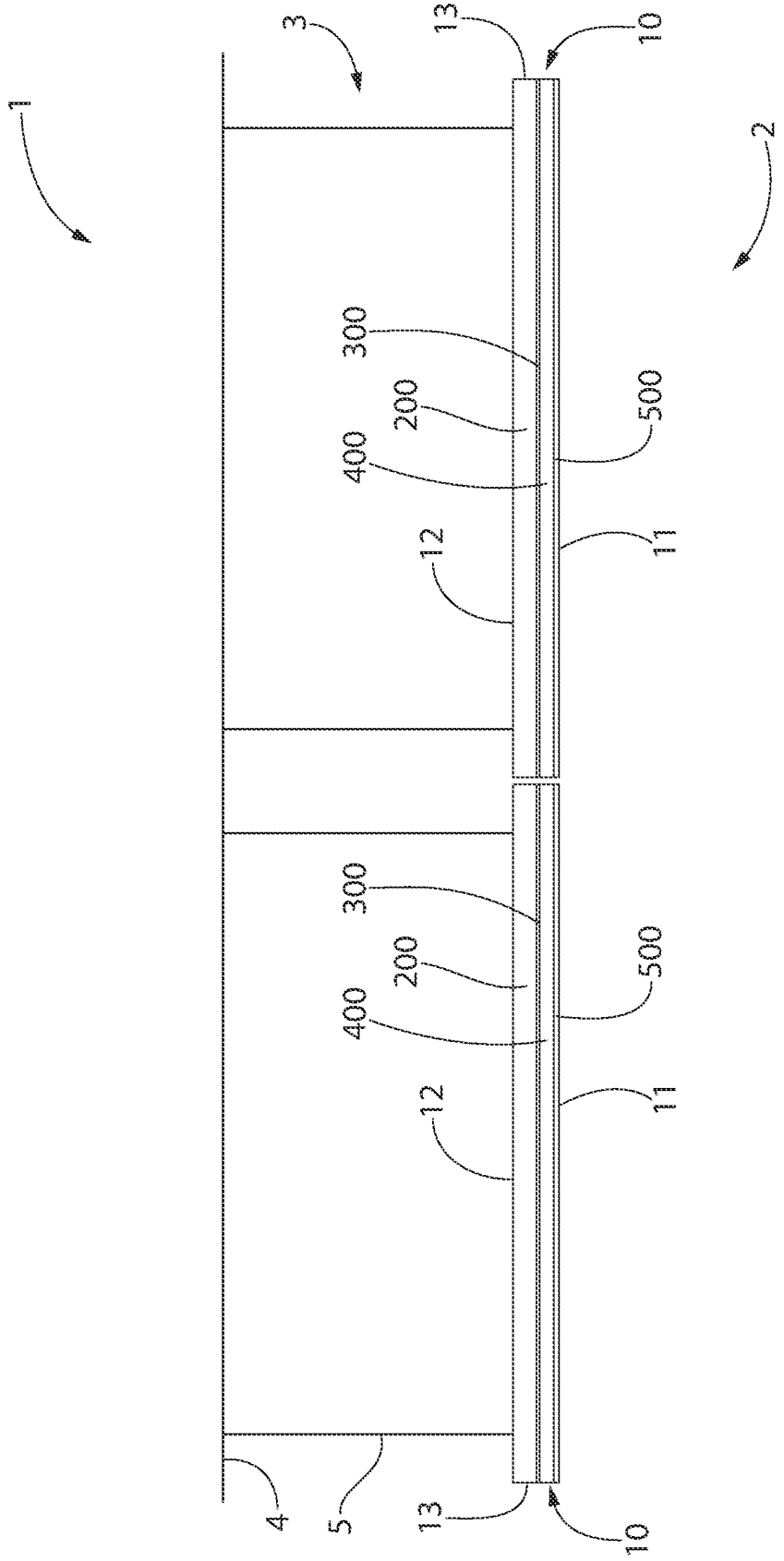

FIG. 5

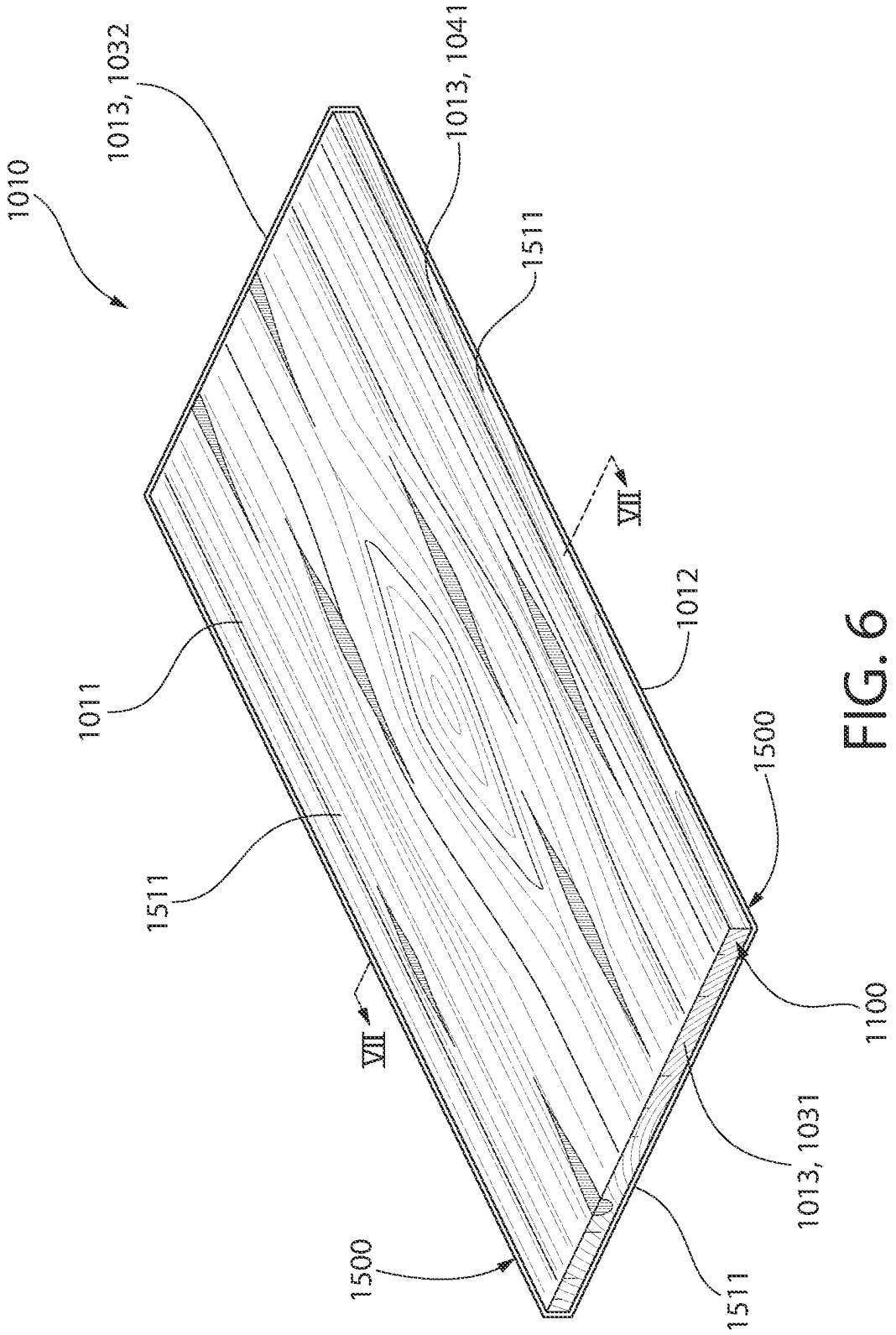
1010
1013, 1032
1013, 1041
1511
VII
1012
1011
1500
1511
VII
1100
1013, 1031
1500
1511

FIG. 6

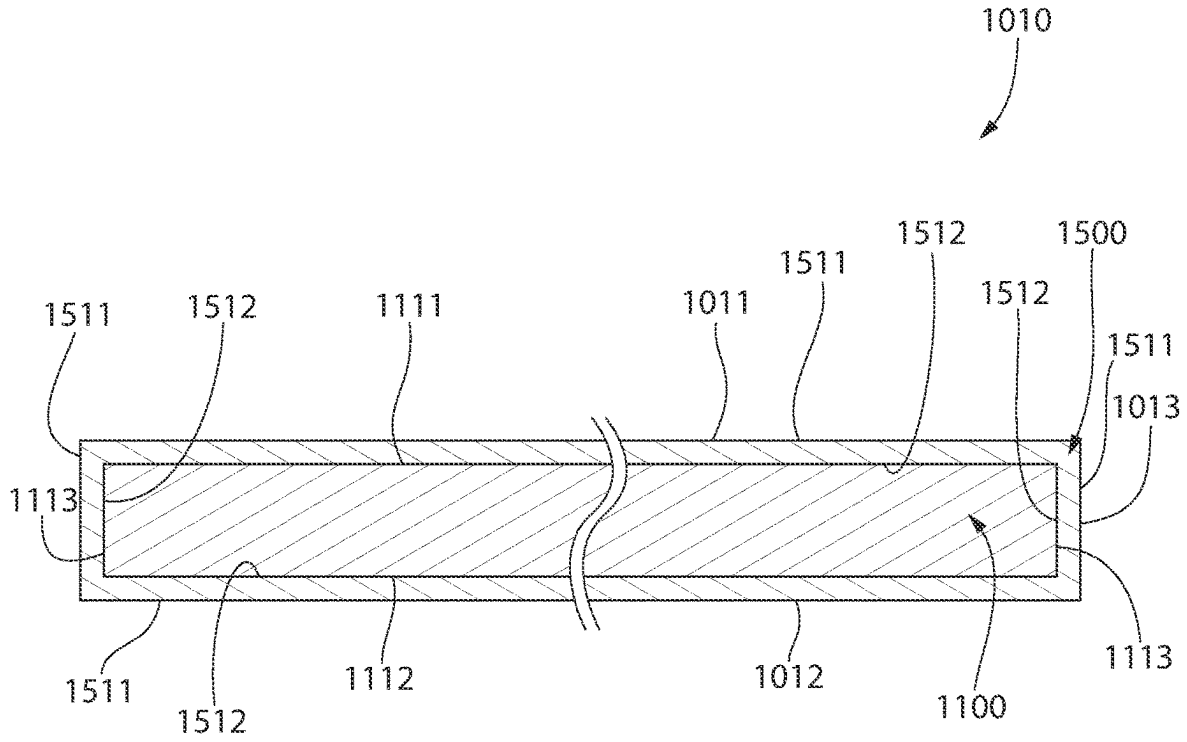
1010
1512
1500
1511
1511
1512
1111
1011
1512
1511
1013
1113
1113
1511
1512
1112
1012
1100

FIG. 7

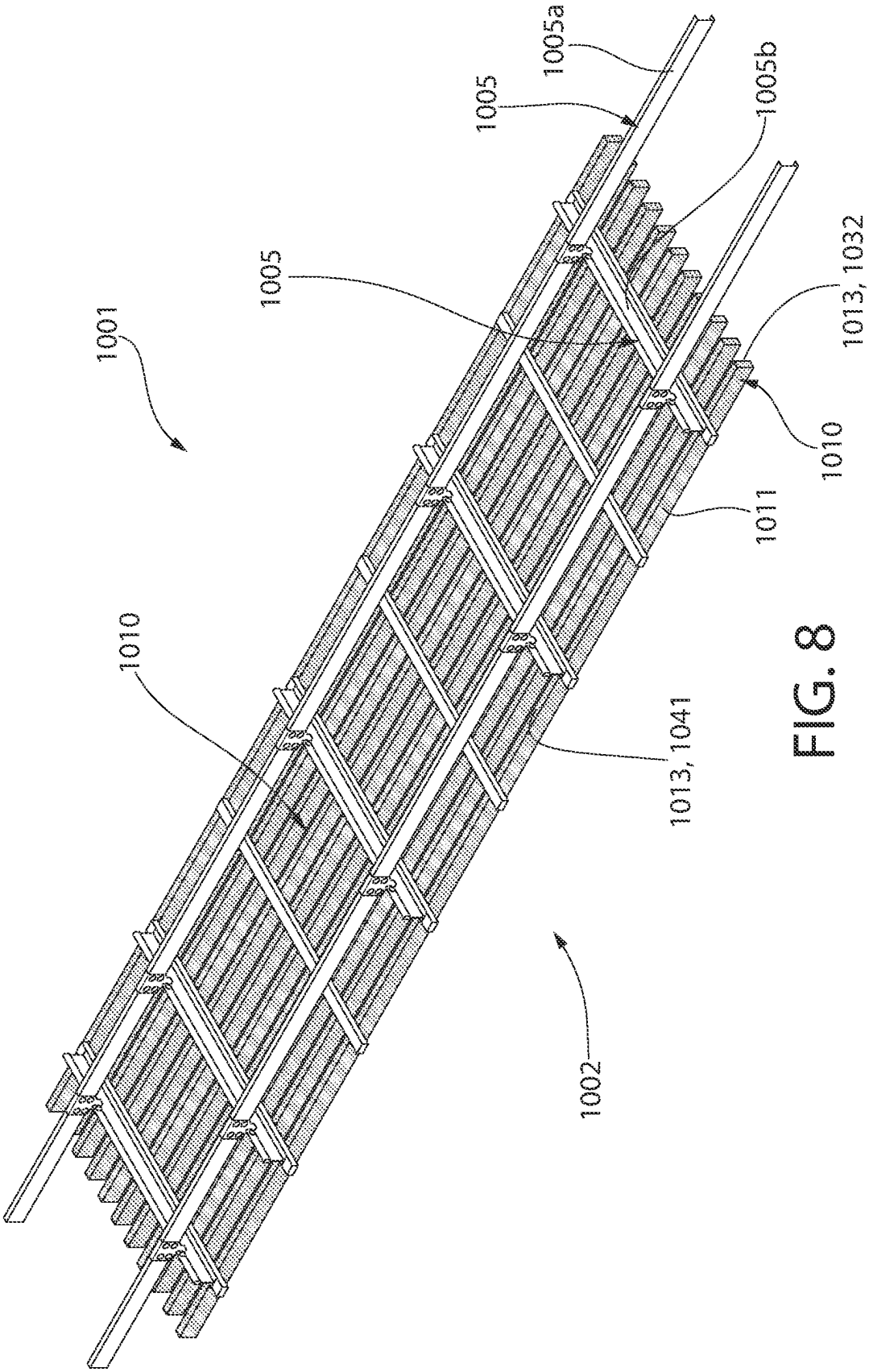
1001
1005
1005
1005a
1005b
1010
1010
1011
1013, 1032
1013, 1041
1002

FIG. 8

FLAME RETARDANT CLEAR COATINGS FOR BUILDING PANELS

CROSS-REFERENCE TO RELATED APPLICATIONS

This application is a continuation of U.S. Pat. No. 11,365,322, filed on May 31, 2018, which claims the benefit of U.S. Provisional Application No. 62/653,897, filed on Apr. 6, 2018, as well as U.S. Provisional Patent Application No. 62/513,126, filed on May 31, 2017, as well as U.S. Provisional Application No. 62/513,115, filed on May 31, 2017. The disclosures of the above applications are incorporated herein by reference.

BACKGROUND

Building products for interior room environments balance interests with respect to cosmetic value, material cost, structural integrity, and fire safety. Previously, maximizing one or two of the aforementioned interests required sacrificing the remaining interests. For example, a building panel that uses natural materials (e.g., natural grain from real wood, as compared to replica grain from printed wood texture) may have superior cosmetic value. However, such building panels also previously had associated safety concerns as either the entire building panel would be made from wood, thereby increasing flammability concerns, thereby endangering individuals by further fueling a fire.

Previous attempts at imparting fire repellency involved applied flame retardant compositions to the major surfaces of the cellulosic materials. However, such previous attempts resulted in degradation of the aesthetic value of the cellulosic substrate due to the flame retardant compositions interfering with the appearance of the resulting building product. Additionally, substantial difficulties existed with respect to proper adhesion of and moisture degradation of such flame retardant compositions. Thus, there is a need for building panels that can be formed from natural materials and exhibit superior cosmetic value without degradation the natural aesthetic appearance imparted by such materials.

BRIEF SUMMARY

The present invention is directed to a barrier coating composition comprising: an organic blend comprising a first component and a second component, the first component comprising latex polymer and the second component being selected from polyurethane emulsion, wax emulsion, and alkyd emulsion; wherein the first component and the second component are present in a weight ratio ranging from about 2:1 to about 20:1, and the latex polymer having a glass transition temperature of less than about 18° C.

In other embodiments, the present invention is directed to a building panel having a water-impervious surface comprising a body having a first major surface opposite a second major surface; a barrier coating atop the first major surface of the body, the barrier coating comprising an organic blend comprising a first component and a second component, the first component comprising latex polymer and the second component being selected from polyurethane emulsion, wax emulsion, and an alkyd emulsion; wherein the barrier coating has a solids content of at least 99% based on the total weight of the barrier coating, and wherein the first component and the second component are present in a weight ratio ranging from about 2:1 to about 20:1, and the latex polymer having a glass transition temperature of less than about 18° C.

Other embodiments of the present invention include a method of forming a water-impervious coating comprising a) mixing an organic blend and a liquid carrier to form a barrier coating composition; b) applying the barrier coating composition to a major surface of a body; c) drying the coating composition to form a barrier coating having a solids content of at least 99% based on the total weight of the barrier coating, wherein the organic blend comprises a first component and a second component, the first component comprising latex polymer and the second component being selected from polyurethane emulsion, alkyd emulsion, and wax emulsion, and the first component and the second component are present in a weight ratio ranging from about 2:1 to about 20:1, and the latex polymer has a glass transition temperature of less than about 18° C.; and wherein the barrier coating is impervious to liquid water.

Other embodiments of the present invention include a barrier coating composition comprising: a blend of a medium chain-stopped oil alkyd emulsion and dry agent; an adhesion promoter; and wherein the chain-stopped oil alkyd emulsion and the adhesion promoter are present in a ratio ranging from about 20:1 to about 40:1.

Other embodiments of the present invention include a barrier coating composition comprising a blend of: an organic blend comprising a first component and a second component, the first component being different from the second component; a flame-retardant composition comprising a first flame retardant and a second flame retardant, the first flame retardant and the second flame retardant being different.

In some embodiments, the present invention is directed to a building panel having a flame-retardant surface comprising a body having a first major surface opposite a second major surface; a barrier coating atop the first major surface of the body, the barrier coating comprising: an organic blend composition; a first flame retardant composition comprising a first flame retardant and a second flame retardant, the first flame retardant and the second flame retardant being different; wherein the barrier coating is substantially transparent such that the first major surface of the body is visible through the barrier coating.

In other embodiments, the present invention includes a method of forming a water-impervious coating comprising a) mixing an organic blend, a flame-retardant composition, and a liquid carrier to form a barrier coating composition; b) applying the barrier coating composition to a major surface of a body; c) drying the coating composition to form a barrier coating having a solids content of at least 99% based on the total weight of the barrier coating, wherein the organic blend comprises a first component and a second component, the first and second components being different, the flame-retardant composition comprises a first flame retardant and a second flame retardant, the first flame retardant and the second flame retardant being different; and the liquid carrier comprises water; and wherein the barrier coating is impervious to liquid water.

Further areas of applicability of the present invention will become apparent from the detailed description provided hereinafter. It should be understood that the detailed description and specific examples, while indicating the preferred embodiment of the invention, are intended for purposes of illustration only and are not intended to limit the scope of the invention.

BRIEF DESCRIPTION OF THE DRAWINGS

The present invention will become more fully understood from the detailed description and the accompanying drawings, wherein:

FIG. **1** is top perspective view of the building panel according to the present invention;

FIG. **2** is a cross-sectional view of the building panel according to the present invention, the cross-sectional view being along the II line set forth in FIG. **1**;

FIG. **3** is cross-sectional view of a building panel according to other embodiments of the present invention, the cross-sectional view being along the II line set forth in FIG. **1**;

FIG. **4** is cross-sectional view of a building panel according to other embodiments of the present invention, the cross-sectional view being along the II line set forth in FIG. **1**;

FIG. **5** is a ceiling system comprising the building panel of the present invention;

FIG. **6** is top perspective view of the building panel according to another embodiment of the present invention;

FIG. **7** is a cross-sectional view of the building panel according to the present invention, the cross-sectional view being along the VII line set forth in FIG. **6**; and

FIG. **8** is a ceiling system comprising the building panel of FIG. **6**.

DETAILED DESCRIPTION

The following description of the preferred embodiment(s) is merely exemplary in nature and is in no way intended to limit the invention, its application, or uses.

As used throughout, ranges are used as shorthand for describing each and every value that is within the range. Any value within the range can be selected as the terminus of the range. In addition, all references cited herein are hereby incorporated by referenced in their entireties. In the event of a conflict in a definition in the present disclosure and that of a cited reference, the present disclosure controls.

Unless otherwise specified, all percentages and amounts expressed herein and elsewhere in the specification should be understood to refer to percentages by weight. The amounts given are based on the active weight of the material.

The description of illustrative embodiments according to principles of the present invention is intended to be read in connection with the accompanying drawings, which are to be considered part of the entire written description. In the description of embodiments of the invention disclosed herein, any reference to direction or orientation is merely intended for convenience of description and is not intended in any way to limit the scope of the present invention. Relative terms such as "lower," "upper," "horizontal," "vertical," "above," "below," "up," "down," "top," and "bottom" as well as derivatives thereof (e.g., "horizontally," "downwardly," "upwardly," etc.) should be construed to refer to the orientation as then described or as shown in the drawing under discussion. These relative terms are for convenience of description only and do not require that the apparatus be constructed or operated in a particular orientation unless explicitly indicated as such.

Terms such as "attached," "affixed," "connected," "coupled," "interconnected," and similar refer to a relationship wherein structures are secured or attached to one another either directly or indirectly through intervening structures, as well as both movable or rigid attachments or relationships, unless expressly described otherwise. Moreover, the features and benefits of the invention are illustrated by reference to the exemplified embodiments. Accordingly, the invention expressly should not be limited to such exemplary embodiments illustrating some possible non-limiting combination of features that may exist alone or in other combinations of features; the scope of the invention being defined by the claims appended hereto.

Unless otherwise specified, all percentages and amounts expressed herein and elsewhere in the specification should be understood to refer to percentages by weight. The amounts given are based on the active weight of the material. According to the present application, the term "about" means +/−5% of the reference value. According to the present application, the term "substantially free" less than about 0.1 wt. % based on the total of the referenced value.

Referring to FIGS. **1** and **5**, the present invention includes a ceiling system **1** as well as a building panel **10** that may be used in the ceiling system **1**. The ceiling system **1** may comprise at least one or more of the building panels **10** installed in an interior space, whereby the interior space comprises a plenum space **3** and an active room environment **2**. The plenum space **3** is defined by the space occupied between a structural barrier **4** between floors of a building and the lower major surface **12** of the building panel **10**. The plenum space **3** provides space for mechanical lines within a building (e.g., HVAC, electrical lines, plumbing, telecommunications, etc.). The active space **2** is defined by the space occupied beneath the upper major surface **11** of the building panel **10** for one floor in the building. The active space **2** provides room for the building occupants during normal intended use of the building (e.g., in an office building, the active space would be occupied by offices containing computers, lamps, etc.).

Each of the building panels **10** may be supported in the interior space by one or more supports **5**. Each of the building panels **10** are installed such that the upper major surface **11** of the building panel **10** faces the active room environment **2** and the lower major surface **12** of the building panel **10** faces the plenum space **3**. The building panels **10** of the present invention have superior fire safety performance—particularly when a fire originates in the active room environment **2**—without sacrificing the desired aesthetic appearance of the building panel **10**, as discussed herein.

Referring to FIG. **1**, the present invention is a building panel **10** having an upper major surface **11**, a lower major surface **12** that is opposite the upper major surface **11**, and major side surfaces **13** that extend from the upper major surface **11** to the lower major surface **12** to form a perimeter of the building panel **10**. The major side surfaces **13** may comprise first and second longitudinal side surfaces **41**, **42** extending substantially parallel to each other. The major side surfaces **13** may further comprise first and second transverse side surfaces **31**, **32** extending substantially parallel to each other. The first and second longitudinal side surfaces **41**, **42** may extend substantially orthogonal to the first and second transverse side surfaces **31**, **32**.

The building panel **10** may have a panel thickness "t_P" as measured from the upper major surface **11** to the lower major surface **12**. The panel thickness t_P may range from about 25 mils to about 3,000 mils—including all values and sub-ranges there-between. In some embodiments, the panel thickness t_P may range from about 25 mils to about 600 mils—including all values and sub-ranges there-between. In

some embodiments, the panel thickness t_P may range from about 700 mils to about 2,000 mils—including all values and sub-ranges there-between.

The building panel **10** may have a panel length "L_P" as measured from the first transverse side surface **31** to the second transverse side surface **32**—i.e., the distance along one of the first or second longitudinal side surfaces **41**, **42**. The panel length L_P may range from about 6 inches to about 100 inches—including all values and sub-ranges there-between. The building panel **10** may have a panel width "W_P" as measured from the first longitudinal side surface **41** to the second longitudinal side surface **42**—i.e., the distance along one of the first or second transverse side surfaces **31**, **32**. The panel width W_P may range from about 2 inches to about 60 inches—including all values and sub-ranges there-between. In some embodiments, the panel width W_P may range from about 12 inches to about 60 inches—including all values and sub-ranges there-between.

The building panel **10** of the present invention comprises a body **100** having a coating **500** applied thereto. The body **100** may comprise a first major surface **111** opposite a second major surface **112** and a side surface **113** extending there-between. The body **100** may be formed from a cellulosic material (e.g., wood), metal, polymer, and combinations thereof. The body **100** may be formed from a single layer of material (also referred to as an integral structure) or the body **100** may have a laminate structure formed from at least two layers. As discussed in greater detail herein, the body **100** having a laminate structure may comprise one or more layers of a cellulosic layer **400**, a substrate layer **200**, and/or an adhesive layer **300**. Although not pictured, the coating **500** of the present invention may be applied to a non-woven scrim. Non-limiting examples of non-woven scrim include fiberglass non-woven scrims. The non-woven scrim may form at least one of the first or second major surface **11**, **12** of the building panel **10**.

The building panel **10** may comprise a decorative pattern **30** that is visible from the upper major surface **11**, the lower major surface **12**, and/or the major side surface **13**. The decorative pattern **30** may comprise a pattern formed from natural materials, such as cellulosic materials (e.g., wood grain, knots, burl, etc.) or a synthetic material such as a printed ink. The decorative pattern **30** may be a body decorative pattern that exists on one of the first major surface **111**, second major surface **112**, or side surface **113** of the body **100**, whereby the body decorative pattern is visible through the coating **500**.

The coating **500** may be independently applied to each of the first major surface **111**, the second major surface **112**, and/or the side surface **113** of the body **100**. In a preferred embodiment, the coating **500** is applied to the first major surface **111** of the body **100**—as shown in FIG. **2**. In another preferred embodiment, the coating **1500** may be applied to each of the first major surface **1111**, the second major surface **1112**, and the side surface **1113** of the body **1100** such that the coating **1500** encapsulates the body **100**—as shown in FIGS. **6** and **7**.

The coating **500** may be clear or substantially clear. For the purposes of this application, the phrases "substantially clear" or "substantially transparent" refers to materials that have the property of transmitting light in such a way that a normal, human eye (i.e., one belonging to a person with so-called "20/20" vision) or a suitable viewing device can see through the material distinctly. The level of transparency should generally be one which permits a normal, human eye to distinguish objects having length and width on the order of at least 0.5 inches, and should not significantly distort the perceived color of the original object. The coating **500** should be substantially clear (or substantially transparent) such that the underlying body decorative feature can be visible from the upper major surface **11** of the building panel **10** as the decorative pattern **30** on the overall building panel **10**, as discussed further herein. The term "substantially clear" or "substantially transparent" may also refer to the coating having at least 70% optical clarity, whereby 100% optical clarity refers to an underlying surface being completely unhindered visually by the coating **500**.

Referring now to FIG. **2**, the coating **500** may comprises an upper coating surface **511** opposite a lower coating surface **512**. The coating **500** may comprise a coating side surface **513** that extends from the upper coating surface **511** to the lower coating surface **512** and forms a perimeter of the coating **500**. The coating side surface **513** may form a portion of the major side surface **13** of the building panel **10**. Stated otherwise, the major side surface **13** of the building panel **10** may comprise the coating side surface **513**. The coating **500** may have a coating thickness "t_C" ranging from about 0.5 mils to about 3.0 mils—including all values and sub-ranges there-between—as measured from the upper coating surface **511** to the lower coating surface **512**.

The coating **500** may comprise an inorganic composition that is substantially clear. According to the present invention, the phrase "inorganic composition" refers to a dry-state composition having less than 3 wt. % of organic compounds present based on the total dry-weight of the referenced inorganic composition, preferably less than 1.5 wt. % of organic compounds present based on the total dry-weight of the referenced inorganic composition. According to the present invention, the phrase "inorganic composition" may also refer to a wet-state composition that has less than 5.0 wt. % of organic compounds present based on the total wet-weight of the referenced inorganic composition, preferably less than 3.0 wt. % of organic compounds present based on the total wet-weight of the referenced inorganic composition.

The phrase "dry-weight" refers to the weight of a referenced component or composition without the weight of any carrier. Thus, when calculating the amounts of components based on dry-weight, the calculation are to be based solely on the solid components (e.g., binder, filler, hydrophobic component, fibers, etc.) and should exclude any amount of residual carrier (e.g., water, VOC solvent) that may still be present from a wet-state, which will be discussed further herein. Additionally, according to the present invention, the phrase "dry-state" refers to a component or composition that is substantially free of carrier, as compared to the phrase "wet-state," which refers to that component still containing various amounts of carrier. The term "weight-state" refers to a component or composition that further comprises a carrier. Similarly, the phrase "wet-weight" refers to a total weight of component or composition that includes the weight of the carrier when in the wet-state.

The inorganic composition may be referred to as a flame retardant composition or a glass-forming composition. When exposed to high-heat (e.g., during a fire), the inorganic composition is capable of creating a strong insulative barrier between the body **100** and high heat originating from a fire. The inorganic composition of the present invention exhibits a high pH that ranges from about 9 to about 13—including all pHs and sub-ranges there-between. In a preferred embodiment, the pH ranges from about 10 to less than about 13—including all pHs and sub-ranges there-between. In a preferred embodiment, the pH is about 12.

The inorganic composition may comprise a silicate compound. Non-limiting examples of the silicate compound may include potassium silicate, tetraethyl orthosilicate, and combinations thereof.

The silicate compound may be present in an amount ranging from about 50 wt. % to about 98 wt. %—including all wt. % and sub-ranges there-between—based on the total weight of the inorganic composition in the dry-state. In a preferred embodiment, the silicate compound may be present in an amount ranging from about 70 wt. % to about 90 wt. %—including all wt. % and sub-ranges there-between—based on the total weight of the inorganic composition in the dry-state.

The inorganic composition may further comprise alumina trihydrate. The alumina trihydrate may be present in an amount ranging from about 0.5 wt. % to about 12.5 wt. %—including all wt. % and sub-ranges there-between—based on the total weight of the inorganic composition in the dry-state. Additionally, compositions of the present invention may comprise a hydrate compound (e.g., alumina trihydrate), but that alone will not render that composition in a wet-state. Rather, the presence of water must be in a non-hydrate form (i.e., not bound in a crystalline matrix). A non-limiting example of composition being in the wet-state is the inorganic composition of the present invention further comprises aqueous water—i.e., water acts as a solvent whereby the inorganic composition may be the solute.

Upon exposure to elevated temperatures, the silicate compounds react to form a silicate glass layer (also referred to as the "glass layer"). The glass layer forms a hard protective and heat-insulative barrier that is especially helpful in preventing the body **100** from igniting at elevated temperatures, for example when the body **100** is formed from a cellulosic material as discussed further herein. The heat-insulative barrier formed by the coating **500** is especially useful when the upper major surface **11**, lower major surface **12**, and/or side surface **13** of the building panel **10** is exposed to heat from a fire that exists in the active room environment **2** of the ceiling system **1** (as shown in FIG. **5**). The heat-insulative barrier created by the inorganic composition slows and prevents further propagation of heat and flame through the coating **500** and, therefore, through the rest of the body **100** of the building panel **10**.

At such elevated temperature, the hydrate present in the alumina trihydrate may be released and create a gaseous expansion within the glass layer. The gaseous expansion may cause the glass layer to lift away from the major surface **111**, **112**, **113** of the body **100**, thereby further separating the underlying body **100** from the high-heat in the surrounding environment, thereby further protecting the body **100** from damage during a fire.

The glass-forming composition may also comprise a first glass component and a second glass component that together react to form an inorganic glass-like surface when exposed to elevated temperatures—such as elevated temperatures during a fire. The inorganic composition of the present invention exhibits a pH ranging from about 1.5 to about 5—including all pHs and sub-ranges there-between. In a preferred embodiment, the pH ranges from about 1.7 to about 4—including all pHs and sub-ranges there-between. In a preferred embodiment, the pH is less than about 3.

The first glass component comprises a phosphate compound. The second glass component comprises a borate compound. The first glass component and the second glass component may be present in a weight ratio ranging from about 5:1 to about 80:1—including all ratios and sub-ranges there-between.

The first glass component may be present in an amount ranging from about 40.0 wt. % to about 80.0 wt. %—including all wt. % and sub-ranges there-between—based on the total weight of the inorganic composition in the dry-state. In a preferred embodiment, the first glass component may be present in an amount ranging from about 55.0 wt. % to about 75.0 wt. %—including all wt. % and sub-ranges there-between—based on the total weight of the inorganic composition in the dry-state. The second glass component may be present in an amount ranging from about 0.5 wt. % to about 15.0 wt. %—including all wt. % and sub-ranges there-between—based on the total weight of the inorganic composition in the dry-state. In a preferred embodiment, the second glass component may be present in an amount ranging from about 1.0 wt. % to about 10.5 wt. %—including all wt. % and sub-ranges there-between—based on the total weight of the inorganic composition in the dry-state.

Non-limiting examples of the phosphate compound of the first glass component include phosphoric acid (H_3PO_4), pyrophosphoric acid ($H_4P_2O_7$), polyphosphoric acid, sodium phosphate, potassium phosphate, aluminum tris (dihydrogen phosphate), other phosphate-ion forming compounds, and combinations thereof. Non-limiting examples of the borate compound of the second glass component include boron trioxide (B_2O_3), zinc borate, and other soluble borate forming compound at pH between 1 and 5, and combinations thereof. Several variants of zinc borate exist and include Zinc borate Firebrake ZB ($2ZnO \cdot 3B_2O_3 \cdot 3.5H_2O$), Zinc borate Firebrake 500 ($2ZnO \cdot 3B_2O_3$), Zinc borate Firebrake 415 ($4ZnO \cdot B_2O_3 \cdot H_2O$), ZB-467 ($4ZnO \cdot 6B_2O_3 \cdot 7H_2O$), and ZB-223 ($2ZnO \cdot 2B_2O_3 \cdot 3H_2O$). According to some embodiments the zinc borate may also serve as a fungicide.

Upon exposure to elevated temperatures, the first and second glass compositions react to form a phosphoborate glass layer (also referred to as the "glass layer"). The glass layer forms a hard protective and heat-insulative barrier that is especially helpful in preventing the body **100** from igniting at elevated temperatures, for example when the body **100** is formed from a cellulosic material as discussed further herein. The heat-insulative barrier formed by the coating **500** is especially useful when the upper major surface **11**, lower major surface **12**, and/or side surface **13** of the building panel **10** is exposed to heat from a fire that exists in the active room environment **2** of the ceiling system **1** (as shown in FIG. **5**). The heat-insulative barrier created by the inorganic composition slows and prevents further propagation of heat and flame through the coating **500** and, therefore, through the rest of the body **100** of the building panel **10**.

The inorganic composition may optionally comprise other additives or fillers such as, but not limited to fire retarding compounds (also referred to as "flame retardant"), adhesion promoters, char-forming additives, viscosity modifying agents, dispersants, waxes, latex polymer, wetting agents, catalyst, cross-linkers, oxidizers, ultra-violet stabilizers.

The adhesion promoters may be a silane having generally have the formula (I)

$$R^1_n Si(OR^2)_{4-n} \quad (1)$$

a wherein R^1 represents a lower alkyl group, a phenyl group or a functional group containing at least one of vinyl, acrylic, amino, epoxide, mercapto, or vinyl chloride functional groups; R^2 is a C1 to C6 alkyl group; and n is a number of 1 to 2.

According to other embodiments, where R^1 is alkyl, preferably, a C_1-C_6alkyl group (the group may be a straight,

cyclic, or branched-chain alkyl), such as methyl, ethyl, n- or iso-propyl, n- or iso-butyl, n-pentyl, cyclohexyl, and the like, preferably a C_1-C_4 alkyl group, most preferably a methyl, ethyl, propyl or butyl group), aryl, such as a phenyl, or a functional group or groups, such as vinyl, acrylic, methacrylic, amino, mercapto, or vinyl chloride functional group, e.g., 3,3,3-trifluoropropyl, γ-glycidyloxypropyl, γmethacryloxypropyl, N-(2-aminoethyl)-3-aminopropyl, aminopropyl, and the like; and each R^2 is, independently, an alkyl group (i.e. a C_1-C_6 straight or branched chain alkyl group, preferably a C_1-C_4 alkyl group, such as a methyl group).

In a non-limiting embodiment, the R^1 may be an epoxide group, whereby the epoxy-functional silane-functional adhesion promoter may have the formula (II):

glycidoxy(C_1-C_6-alkyl)(tri-C_1-C_3-alkoxy)silane (II)

In some embodiments, the compound of formula (II) may include compounds such as, 3-glycidoxypropyltrimethoxysilane, 3-glycidoxypropyldiisopropylethoxysilane, (3-glycidoxypropyl)methyldiethoxysilane, 3-glycidoxypropyltriethoxysilane, and epoxy-functional silane compounds represented by the formula (IV)

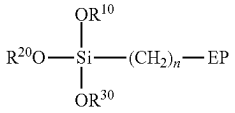

(IV)

wherein R^{10}, R^{20} and R^{30}, independently, represent aliphatic or aromatic groups, especially, lower alkyl of from 1 to 6 carbon atoms, preferably C_1-C_3 alkyl, and 'EP' represents glycidyl (e.g., glycidyloxy), cyclohexane oxide (epoxycyclohexyl) cyclopentane-oxide (epoxycyclopentyl) and n is a number of from 1 to 4, preferably 1, 2 or 3.

As examples of the epoxy functional compounds represented by formula (IV), mention may be made of, for example, gamma-glycidyloxymethyltrimethoxysilane, gamma-glycidyloxymethyltriethoxysilane, gamma-glycidoxymethyl-tripropoxysilane, gamma-glycidoxymethytributoxysilane, beta-glycidoxyethyltrimethoxysilane, beta-glycidoxyethyltriethoxysilane, beta-glycidoxyethyl-tripropoxysilane, beta-glycidoxyethyl-tributoxysilane, beta-glycidoxyethyltiimethoxysilane, alpha-glycidoxyethyl-triethoxysilane, alpha-glycidoxyethyl-tripropoxysilane, alpha-glycidoxyethyltributoxysilane, gamma-glycidoxypropyl-trimethoxysilane, gamma-glycidoxypropyl-triethoxysilane, gamma-glycidoxypropyl-tripropoxysilane, gamma-glycidoxypropyltributoxysilane beta-glycidoxypropyl-trimethoxysilane, beta-glycidoxypropyl-triethoxysilane, beta-glycidoxypropyl-tripropoxysilane, beta-glycidoxypropyl-tributoxysilane, alpha-glycidoxypropyl-trimethoxysilane, alpha-glycidoxypropyl-triethoxysilane, alpha-glycidoxypropyl-tripropoxysilane, alpha-glycidoxypropyl-tributoxysilane, gamma-glycidoxybutyl-trimethoxysilane, delta-glycidoxybutyl-triethoxysilane, delta-glycidoxybutyl-tripropoxysilane, delta-glycidoxybutyl-tributoxysilane, delta-glycidoxybutyl-trimethoxysilane, gamma-glycidoxybutyl-triethoxysilane, gamma-glycidoxybutyl-tripropoxysilane, gamma-alpropoxybutyl-tributoxysilane, delta-glycidoxybutyl-trimethoxysilane, delta-glycidoxybutyl-triethoxysilane, delta-glycidoxybutyl-tripropoxysilane, alpha-glycidoxybutyl-trimethoxysilane, alpha-glycidoxybutyl-triethoxyalpha-glycidoxybutyl-tripropoxysilane, alpha-glycidoxybutyl-tributoxysilane, (3,4-epoxycyclohexyl)-methyl-trimethoxysilane, (3,4-epoxycyclohexyl)methyl-triethoxysilane, (3,4-epoxycyclohexyl)methyl-tripropoxysilane, (3,4-epoxycyclohexyl)-methyl-tributoxysilane, (3,4-epoxycyclohexyl)ethyl-trimethoxyslane, (3,4-epoxycyclohexyl)ethyl-triethoxysilane, (3,4-epoxycyclohexyl)ethyl-tripropoxysilane, (3,4-epoxycyclohexyl)-ethyl-tributoxysilane, (3,4-epoxycyclohexyl)propyl-trimethoxysilane, (3,4-epoxycyclohexyl)propyl-triethoxysilane, (3,4-epoxycyclohexyl)propyl-tripropoxysilane, (3,4-epoxycyclohexyl)propyl-tributoxysilane, (3,4-epoxycyclohexyl)butyl-trimethoxysilane, (3,4-epoxycyclohexyl)butyl-triethoxysilane, (3,4-epoxycyclohexyl)butyl-tripropoxysilane, (3,4-epoxycyclohexyl)butyl-tributoxysile.

As examples of silanes of formula (I), wherein R^1 is an alkyl group or aryl group, and n is 1, mention may be made of, for example, methyltrimethoxysilane, ethyltrimethoxysilane, ethyltriethoxysilane, n-propyltrimethoxysilane, n-propyltriethoxysilane, isopropyltrimethoxysilane, n-butyltrimethoxysilane, isobutyltrimethoxysilane, phenyltrimethoxysilane, preferably Methyltrimethoxysilane, phenyltrimethoxysilane, and mixtures thereof.

In a non-limiting embodiment, the R^1 may be an amino group, whereby the amine-functional silane-functional adhesion promoter may be selected from one or more of aminoethyl-triethoxysilane, beta-amino-ethyltrimethoxysilane, beta-aminoethyl-triethoxysilane beta-amino-ethyl-tributoxysilane, beta-aminoethyltripropoxysilane, alpha-aminoethyl-trimethoxysilane, alpha-aminoethyl-triethoxysilane, gamma-aminopropyltrimethoxysilane, gamma-aminopropyl-triethoxysilane, gamma-aminopropyl-tributoxysilane, gamma-amino-propyltripropoxysilane, beta-aminopropyl-trimethoxysilane, beta-aminopropyl-trimethoxysilane, beta-amino-propyltripropoxysilane, beta-aminopropyl-tributoxysilane, alpha-aminopropyl-trimethoxysilane, alpha-aminopropyl-triethoxysilane, alpha-aminopropyl-tributoxysilane, alpha-aminopropyl-tripropoxysilane, N-aminomethylaminoethyl-trimethoxysilane, N-aminomethylaminomethyl-tripropoxysilane, N-aminomethyl-beta-aminoethyl-trimethoxysilane, N-aminomethyl-beta-aminoethyl-triethoxysilane, N-aminoethyl-beta-aminoethyl-tripropoxysilane N-aminomethyl-gamma-aminopropyl-trimethoxysilane, N-aminomethyl-gamma-aminopropyl-trimethoxysilane, N-aminomethyl-gamma-aminopropyl-tripropoxysilane, N-aminomethyl-gamma-aminopropyl-tripropoxysilane, N-aminomethyl-beta-aminopropyl-triethoxysilane, N-aminomethyl-beta-aminopropyl-tripropoxysilane, N-aminomethyl-beta-aminopropyl-tripropoxysilane, N-aminopropyltripropoxysilane, N-aminopropyl-trimethoxysilane, N-(beta-aminoethyl)-beta-aminoethyl-trimethoxysilane, N-(beta-aminoethyl)-beta-aminoethyl-trimethoxysilane, N-(beta-aminoethyl)-beta-aminoethyl-triethoxysilane, N-(beta-aminoethyl)-beta-aminoethyl-trimethoxysilane, N-(beta-aminoethyl)-alpha-aminoethyl-triethoxysilane, N-beta-aminoethyl)-alpha-aminoethyl-tripropoxysilane, N-(beta-aminoethyl)-beta-aminopropyl-trimethoxysilane, N-(beta-aminoethyl)-gamma-aminopropyl-triethoxysilane, N-(beta-aminoethyl)-gamma-aminopropyl-tripropoxysilane, N-(beta-aminoethyl)-gamma-aminopropyl-trimethoxysilane, N-(beta-aminoethyl)-beta-aminopropyl-triethoxysilane, N-(beta-aminoethyl)-beta-aminopropyl-tripropoxysilane, N-(gamma-aminopropyl)-beta-aminoethyl-trimethoxysilane, N-(gamma-aminopropyl)-beta-aminoethyl-triethoxysilane, N-gamma-aminopropyl)-beta-aminoethyl-tripropox-

ysilane, N-methyl aminopropyl trimethoxysilane, beta-aminopropyl, methyl diethoxysilane, gamma-diethylene triaminepropyltriethoxysilane, and the like.

The oxidizers may be present in the inorganic coating in an amount ranging from about 0.1 wt. % to about 2 wt. %—based on the total dry weight of the inorganic coating—including all amounts and sub-ranges there-between. Non-limiting examples of oxidizers include peroxide, hydrogen peroxide, and the like, as well as combinations thereof.

In some embodiments, the inorganic coating composition may comprise a chelation forming agent that are capable of reacting with tannins present in cellulosic materials present in the cellulosic layer **300**. The reaction between the chelation forming agent and the tannin form a chelation compound comprising a metal ion and ligands formed from the tannin. By capturing the tannin in the chelation compound, the tannin is prevented from creating a yellowing effect in the resulting coating. Non-limiting examples of chelation forming agent is zinc oxide, aluminum zirconium, and combinations thereof. In a preferred embodiment, the chelation forming agent is zinc oxide. The chelation forming agent may be present in the inorganic coating in an amount ranging from about 0.1 wt. % to about 2 wt. %—based on the total dry weight of the inorganic coating—including all amounts and sub-ranges there-between.

According to some embodiments, the inorganic composition may further comprise organic compounds so long as the overall inorganic composition includes less than 5 wt. % of organic compounds in the overall inorganic composition. According to some embodiments, the inorganic composition may be substantially free of blowing-agent. The wetting agent may be present in a non-zero amount that is less than about 0.1 wt. %—based on the total dry-weight of the inorganic composition.

The filler may be present in the inorganic coating in an amount ranging from about 15 wt. % to about 75 wt. %—including all amounts and sub-range there-between—based on the total dry weight of the inorganic coating. Non-limiting examples of filler may include calcium carbonate ($CaCO_3$), aluminum carbonate ($Al_2(CO_3)_3$), lithium carbonate ($LiCO_3$), magnesium carbonate ($MgCO_3$), fumed silica, aluminum oxide (Al_2O_3), and combinations thereof.

The flame retardants may be present in the coating **500** in an amount ranging from about 0 wt. % to about 50 wt. %—including all values and sub-ranges there-between—based on the total weight of the coating **500**. Non-limiting examples of flame retardant may include ammonium hydroxide, aluminum trihydrate, magnesium hydroxide, huntite, hydromagnesite, silica, polyphosphate, chloride salts—such as sodium chloride, antimony oxide, and borates, such as calcium borate, calcium borosilicate, magnesium borate, zinc borate, and combinations thereof.

According to the present invention, it has been surprisingly discovered that superior flame retardancy can be achieved when combining two or more different flame retardants. In a non-limiting example, a blend of alumina trihydrate and calcium borosilicate imparts a superior flame retardancy compared to only alumina trihydrate or calcium borosilicate for the same loading amount of overall flame retardant in the coating of the present invention. In another non-limiting example, a blend of alumina trihydrate and zinc borate imparts a superior flame retardancy compared to only alumina trihydrate or zinc borate for the same loading amount of overall flame retardant in the coating of the present invention.

The coating composition of the present invention may comprise a first flame retardant and a second flame retardant, whereby the first and second flame retardants are different, and a ratio of the first flame retardant to second flame retardant ranges from about 1:3 to about 3:1—including all ratios and sub-ranged there-between. In some embodiments, the ratio of the first flame retardant to second flame retardant may range from about 1:2 to about 2:1—including all ratios and sub-ranged there-between. In some embodiments, the ratio of the first flame retardant to second flame retardant ranges from about 1:1.5 to about 1.5:1—including all ratios and sub-ranged there-between—preferably about 1:1.

The blend of first and second flame retardant may be present in an amount ranging from about 1 wt. % to about 30 wt. %—based on the total weight of the coating composition—including all amounts and sub-ranges there-between. The blend of first and second flame retardant may be present in an amount ranging from about 5 wt. % to about 20 wt. %—based on the total weight of the coating composition—including all amounts and sub-ranges there-between. The blend of first and second flame retardant may be present in an amount ranging from about 10 wt. % to about 20 wt. %—based on the total weight of the coating composition—including all amounts and sub-ranges there-between.

The dispersant may be ionic or non-ionic. Non-limiting examples of ionic dispersant includes sodium polyacrylate. Non-limiting examples of non-ionic dispersant include propoxylated ethoxylated linear alcohol, ethoxylated nonylphenols, ethoxylated alcohols, ethoxylated castor oil, polyethylene glycol fatty acid esters, and ethyleneglycol-propyleneglycol copolymers. The dispersant may be present in the inorganic composition in an amount that ranges from a non-zero amount to less than 1 wt. % based on the total dry-weight of the inorganic composition. In a preferred embodiment, the dispersant is preset in an amount ranging from a non-zero amount to less than 0.5 wt. % based on the total dry-weight of the inorganic composition.

According to the present invention, the coating **500** may be comprised of a single integral layer (FIG. **2**) or a plurality of sub-layers **540**, **550**, **560** (FIGS. **3** and **4**). The coating **500** show in FIG. **2** having a single integral layer comprises the inorganic composition of the present invention.

Referring now to FIG. **3**, the coating **500** of the present invention may comprise may comprise a first sub-layer **540** and a second sub-layer **550**, whereby the first sub-layer **540** is directly atop one or more of the first major surface **111**, second major surface **112**, and/or side surface **113** of the body **100**. The second sub-layer **550** may be directly atop the first sub-layer **540**. The second sub-layer **550** comprises the inorganic composition of the present invention. In such embodiments, the inorganic composition may be present in an amount ranging from about 95 wt. % to about 100 wt. %—including all values and sub-ranges there-between—based on the total dry-weight of the second sub-layer **550**.

Referring now to FIG. **4**, the coating **500** of the present invention may comprise may comprise a first sub-layer **540**, a second sub-layer **550**, and a third sub-layer **560**, whereby the first sub-layer **540** is directly atop one or more of the first major surface **111**, second major surface **112**, and/or side surface **113** of the body **100**. The second sub-layer **550** may be directly atop the first sub-layer **540**, and the third sub-layer **560** may be directly atop the second sub-layer **550**. The second sub-layer **550** may comprise the inorganic composition of the present invention. In such embodiments, the inorganic composition may be present in an amount ranging from about 90 wt. % to about 100 wt. %—including all values and sub-ranges there-between—based on the total dry-weight of the second sub-layer **550**.

According to the present invention, the first sub-layer **540** may also be referred to as a "base coating." The first sub-layer **540** may be present in an amount ranging from about 50 g/m^2 to about 80 g/m^2—including all amounts and sub-ranges there-between—based on the total dry-weight of the first sub-layer **540**.

The first sub-layer **540** is an inorganic coating may comprise a first silicate compound, which is selected from the silicate compounds previously discussed. The first silicate compound may be present in the first sub-layer in an amount ranging from about 50 wt. % to about 98 wt. %—including all amounts and sub-ranges there-between—based on the total dry weight of the first sub-layer **540**. The first sub-layer **540** may be substantially clear. The first sub-layer **540** may comprise alumina trihydrate in an amount ranging from about 0.5 wt. % to about 5.5 wt. %—including all wt. % and sub-ranges there-between—based on the total weight of the first sub-layer **540** in the dry-state.

According to the present invention, the phrase "inorganic coating" refers to the coating having less than 5 wt. % of organic compounds present based on the total dry weight of the referenced inorganic coating, preferably less than 3 wt. % of organic compounds present based on the total weight of the referenced inorganic coating in the dry-state. According to some embodiments, the inorganic coating of the second sub-layer **550** may be formed entirely from the inorganic composition of the present invention.

Although the first sub-layer **540** is an inorganic coating, it may comprise a first organic component in an amount up to about 3 wt. % based on the total weight of the first sub-layer. The first organic component of the first sub-layer **540** may comprise one or more dispersant.

In other embodiments the first sub-layer **540** may be formed from a sealant polymer—whereby no silicates are present in the first sub-layer **540**. Non-limiting examples of such sealant polymer include polyurethane, latex polymer, as well as commercially available wood sealers or one of the other polymer binders listed herein. According to the embodiments where the first sub-layer **540** comprises a sealant polymer, the first sub-layer **540** may be present in a dry-weight ranging from about 0.5 g/ft^2 to about 4.0 g/ft^2—including all amounts and sub-ranges there-between.

The second sub-layer **550** may be an inorganic coating that comprises a second silicate compound selected from the silicate compounds previously discussed. The second sub-layer **550** may be referred to as an "intermediate coat." The second sub-layer **540** may be present in an amount ranging from about 35 g/m^2 to about 65 g/m^2—including all amounts and sub-ranges there-between—based on the total dry-weight of the second sub-layer **550**.

The second silicate compound may be present in the second sub-layer **550** in an amount ranging from about 50 wt. % to about 98 wt. %—including all amounts and sub-ranges there-between—based on the total dry weight of the second sub-layer **540**. The second silicate compound may be the same as the second silicate compound. In other embodiments, the second silicate compound may be different than the second silicate compound. The second sub-layer **550** may be substantially clear and/or optically transparent. The second sub-layer **550** may comprise alumina trihydrate in an amount ranging from about 0.5 wt. % to about 5.5 wt. %—including all wt. % and sub-ranges there-between—based on the total weight of the second sub-layer **550** in the dry-state.

The second sub-layer **550** may further comprise one or more of the aforementioned silane adhesion promoters. The silane adhesion promoter may be present in an amount ranging from about 3 wt. % to about 15 wt. % based on the total weight of the second sub-layer **550**—including all amounts and sub-ranges there-between. In one embodiment, the silane adhesion promoter of the second sub-layer **550** may be amine-functional.

Although the second sub-layer **550** is an inorganic coating, it may comprise a second organic component in an amount up to about 3 wt. % based on the total weight of the second sub-layer **550**. The second organic component may comprise one or more of the dispersants, as previously discussed. The second organic component may also comprise a wax, a wax blend, a wax emulsion, and combinations thereof in an amount ranging from about wt. % to about 1 wt. % to about 10 wt. %—including all values and sub-ranges there-between—based on the total dry-weight of the second sub-layer **550**.

Non-limiting examples of the wax (as well as wax emulsion) of the second sub-layer **550** may include a petroleum paraffin wax, a natural wax, or a synthetic wax such as polyethylene wax or oxidized polyethylene wax, or their mixtures. The wax can be, for example, a slack wax having a melting point of 40-80° C., optionally having a melting point of 45-65° C. The wax may be present in the amount ranging from about of 4 wt. % to about 7 wt. % based on the total dry-weight of the second sub-layer **550**—including all amounts and sub-ranges there-between.

Referring now to FIG. **4**, other embodiments provide that the coating **500** may further comprise a third sub-layer **560** atop the second sub-layer **550**, which is atop the first sub-layer **540** that is atop the body **100**. The third sub-layer **560** may be referred to as a "topcoat." The third sub-layer **560** may be an organic coating. In one embodiment, the silane adhesion promoter of the third sub-layer **560** may be epoxide-functional.

The third sub-layer **560** may comprise a blend of components capable for forming a topcoat layer atop the underlying body **100**. The third sub-layer **560** may be formed from a moisture barrier composition that imparts moisture barrier properties to the resulting third sub-layer **560**. The term "moisture barrier" refers to a composition that may be impervious to liquid water yet allows for water vapor to pass through the topcoat layer.

The third sub-layer **560** may be present in an amount ranging from about 10 g/m^2 to about 30 g/m^2—including all amounts and sub-ranges there-between—based on the total dry-weight of the third sub-layer **560**. The third sub-layer **560** may further comprise various additives and fillers. The polymer binder may be present in an amount ranging from about 85 wt. % to about 99.9 wt. %—including all values and sub-ranges there-between—based on the total weight of the third sub-layer **560** in the dry-state.

According to the present invention, the components may be a binder, such as an organic binder. The binder may be selected from one or more of polymer binders. In other embodiments the component may be a chain-stopped oil alkyd emulsion, a wax emulsion, and an alkyd emulsion.

The third sub-layer **560** may further comprise one or more of the aforementioned silane adhesion promoters. The silane adhesion promoter may be present in an amount ranging from about 3 wt. % to about 15 wt. % based on the total weight of the third sub-layer **560**—including all amounts and sub-ranges there-between.

The third sub-layer **560** may also comprise the aforementioned flame retardant. Specifically, the third sub-layer may comprise a first flame retardant and a second flame retardant, whereby the first and second flame retardants are different,

and a ratio of the first flame retardant to second flame retardant ranges from about 1:3 to about 3:1—including all ratios and sub-ranged there-between. In some embodiments, the ratio of the first flame retardant to second flame retardant may range from about 1:2 to about 2:1—including all ratios and sub-ranged there-between. In some embodiments, the ratio of the first flame retardant to second flame retardant ranges from about 1:1.5 to about 1.5:1—including all ratios and sub-ranged there-between—preferably about 1:1.

The blend of first and second flame retardant may be present in an amount ranging from about 1 wt. % to about 30 wt. %—based on the total weight of the third sub-layer **560** composition—including all amounts and sub-ranges there-between. The blend of first and second flame retardant may be present in an amount ranging from about 5 wt. % to about 20 wt. %—based on the total weight of the third sub-layer **560**—including all amounts and sub-ranges there-between. The blend of first and second flame retardant may be present in an amount ranging from about 10 wt. % to about 20 wt. %—based on the total weight of the third sub-layer **560**—including all amounts and sub-ranges there-between.

In some embodiments, the organic blend may comprise a blend of a first component and a second component, whereby the first and second components are different. In a non-limiting embodiment, the first component may be a binder, such as a polymer binder. Non-limiting examples of polymer binder include latex polymer. In a non-limiting embodiment, the second component may be selected from polyurethane emulsion, wax emulsion, and alkyd emulsion. The first component and second component may be present in a weight ratio ranging from about 2.5:1 to about 10:1—including all ratios and sub-ranges there-between.

According to some embodiments, the organic binder may comprise a first component, a second component, and a third component, whereby the first, second, and third components are different. The first component may be a polymeric binder, such as a latex polymer. The second component may be polyurethane emulsion, and the third component may be a wax emulsion. The first component and second component may be present in a weight ratio ranging from about 2.5:1 to about 8:1—including all ratios and sub-ranges there-between. The first component and the third component may be present in a weight ratio ranging from 5:1 to about 10:1—including all ratios and sub-ranges there-between.

The polymer binder may comprise one or more vinyl or acrylic homopolymers or copolymers formed from ethylenically unsaturated monomers. According to the present invention the polymer binder may have a glass transition temperature that is less than about 18° C. The polymer binder may have a glass transition temperature that is less than about 17° C. The polymer binder may have a glass transition temperature that is less than about 16° C. The polymer binder may have a glass transition temperature that is less than about 15° C. The polymer binder may have a glass transition temperature that is less than about 14° C. The polymer binder may have a glass transition temperature that is less than about 13° C. The polymer binder may have a glass transition temperature that is less than about 12° C. The polymer binder may have a glass transition temperature that is less than about 11° C. The polymer binder may have a glass transition temperature that is about 10° C.

Non-limiting examples of monomers than may form the polymer binder include ethylene or butadiene and vinyl monomers such as styrene, vinyl esters such as vinyl acetate, vinyl propionate, vinyl butyrates, acrylic acid, methacrylic acid, or esters of acrylic acid and/or esters of methacrylic acid. The esters of acrylic or methacrylic acid may have an alkyl ester portion containing 1 to 12 carbon atoms as well as aromatic derivatives of acrylic and methacrylic acid, and can include, for example, acrylic and methacrylic acid, methyl acrylate and methyl methacrylate, ethyl acrylate and ethyl methacrylate, butyl acrylate and butyl methacrylate, propyl acrylate and propyl methacrylate, 2-ethyl hexyl acrylate and 2-ethyl hexyl methacrylate, cyclohexyl acrylate and cyclohexyl methacrylate, decyl acrylate and decyl methacrylate, isodecyl acrylate and isodecyl methacrylate, benzyl acrylate and benzyl methacrylate and various reaction products such as butyl, phenyl, and cresyl glycidyl ethers reacted with acrylic and methacrylic acids.

Specifically, the hydrophobic polymer may be a homopolymer or copolymer produced from ethylenically unsaturated monomers, such as styrene, alpha-methylstyrene, vinyl toluene, ethylene, propylene, vinyl acetate, vinyl chloride, vinylidene chloride, acrylonitrile, acrylamide, methacrylamide, acrylic acid, methacrylic acid, (meth)acryloxy-propionic acid, itaconic acid, aconitic acid, maleic acid, monomethyl maleate, monomethyl fumarase, monomethyl itaconate, various (C_1-C_{20}) alkyl or (C_3-C_{20}) alkenyl esters of (meth)acrylic acid and the like. The expression (meth) acrylic, as used herein, is intended to serve as a generic expression embracing both acrylic and methacrylic acid and casters thereof e.g., methyl (meth)acrylate, ethyl (meth) acrylate, butyl (meth)acrylate, isobutyl (meth)acrylate, 2-ethyl hexyl(meth)acrylate, benzyl (meth)acrylate, lauryl (meth)acrylate, oleyl(meth)acrylate, palmityl (meth)acrylate, stearyl (meth)acrylate and the like. In other embodiments, the hydrophobic polymeric binder may include polymer comprising polyurethane, polyester, polyester-modified polyurethane, epoxy or a combination thereof.

In some embodiments, the polymer binder may be an acrylic polymer having an acrylic content of 100% based on the total weight of the polymer binder. In some embodiments, the polymer binder may be an acrylic polymer having an acrylic content of 100% based on the total weight of the polymer binder.

Non-limiting examples of wax include paraffin wax (i.e. petroleum derived wax), polyolefin wax, as well as naturally occurring waxes and blends thereof. Non-limiting examples of polyolefin wax include high density polyethylene ("HDPE") wax, polypropylene wax, polybutene wax, polymethypentene wax, and combinations thereof. Naturally occurring waxes may include plant waxes, animal waxes, and combination thereof. Non-limiting examples of animal waxes include beeswax, tallow wax, lanolin wax, animal fat based wax, and combinations thereof. Non-limiting examples of plant waxes include soy-based wax, carnauba wax, ouricuri wax, palm wax, candelilla wax, and combinations thereof. In a preferred embodiment, the wax is paraffin wax.

Non-limiting examples of medium oil include the reaction product of a polycarboxylic acid and a polyhydric alcohol, in which the acid may be a saturated acid or an alpha, beta unsaturated acid, but preferably those, which are saturated.

Non-limiting examples of saturated polycarboxylic acids include oxalic, malonic, succinic, glutaric, sebacic, adipic, pimelic, suberic, azelaic, tricarballyic, citric, tartaric, and maleic, Phthalic acid and terepthalic acid may also be used in the preparation of the alkyd resins in the same proportions as the saturated polycarboxylic acids. Additionally, one may use such unsaturated acids asmaleic, fumaric, itaconic, citraconic, and the like. These acids and other comparable acids, their esters, and their anhydrides may be used in the

preparation of these alkydresins. These acids may be used either singly or in combination with one another.

Non-limiting examples of polyhydric alcohols may include ethylene glycol, diethylene glycol, dimethylene glycol, tetramethylene glycol, pinacol, trimethylol propane, trimethylol ethane, mannitol, dulcitol, sorbitol, glycerol, pentaerythritol, dipentaerythritol, and the like. The polyhydric alcohols may be used either singly or in combination with one another in the esterification reaction in the preparation of the alkyd resin.

Additionally, the chain stopped oils may be esterification reaction product of an oil, such as castor oil, linseed oil, chaulmoogra oil, cherry kernel oil, cod liver oil, corn oil, hemp seed oil, grape seed oil, hazel nut oil, candlenut oil, lard oil, soya oil, coconut oil, cottonseed oil, tung oil, perilla oil, oiticica oil, fish oil, olive oil, peach kernel oil, peanut oil, pistachio nut oil, rape seed oil, and the like.

According to some embodiments, the oils comprising hydroxyl functionality may be further reacted with an isocyanate-functional compound to produce medium oil of polyurethane alkyd emulsion.

According to the present invention, the term "medium oil" refers to an oil formed from a reactive mixture of fatty acids and hydroxyl-functional compounds, whereby the resin mixture comprises about 40 wt. % to about 60 wt. % of the fatty acids. Additionally, the term "long oil" refers to an oil formed from a reactive mixture of fatty acids and hydroxyl-functional compounds, whereby the mixture comprises more than about 60 wt. % of the fatty acids. Additionally, the term "short oil" refers to resin mixture of fatty acids and hydroxyl-functional compounds, whereby the resin mixture comprises less than about 40 wt. % of the fatty acids. The amount of fatty acid in the reaction mixture dictates the chain length of the resulting oil resin—whereby less fatty acid results in a short chain length and more fatty acid results in longer chain length.

The hydrophobic polymer may be present in an amount ranging from about 70 wt. % to about 100 wt. %—including all values and sub-ranges there-between—based on the total weight of the moisture barrier composition.

Generally, the coating **500** may be applied directly to one of the first major surface **111**, the second major surface **112**, and/or the side surface **113** of the body **100**, optionally with the addition of a carrier such as water. Each of the first sub-layer **540** and/or the third sub-layer **560** may each be applied in the wet-state, whereby the carrier is selected from water, VOC-based solvent, and combinations thereof. The inorganic coating of the second sub-layer **550** may be applied in the wet-state, whereby the carrier is water and is substantially free of VOC-based solvent.

The coating **500**—including each sub-layer **540**, **550**, **560**—may be applied by spray, roll-coating, dip coating, curtain coating, brushing, blade coating, or the like, followed by drying and/or curing (optionally with the addition of heat) for a period of time to form the coating **500** atop at least one of the first major surface **111**, the second major surface **112**, and/or the side surface **113** of the body **100**—as discussed in greater detail herein.

The first sub-layer **540** may be applied in the wet-state directly to at least one of the first major surface **111**, second major surface **112**, and/or side surface **113** of the body **100**. In the wet-state, the first sub-layer **540** may comprise a carrier in an amount ranging from about 50 wt. % to about 85 wt. %—including all values and sub-ranges there-between—based on the total weight of the wet-state first sub-layer **540**. In the wet-state, the first sub-layer **540** may be applied in an amount such that the first sub-layer **540** has a wet thickness ranging from about 0.5 mils to about 2.5 mils—including all values and sub-ranges there-between. The carrier may be selected from water, an organic solvent, or a combination thereof. In a preferred embodiment, the wet-state sealant composition is a waterborne system having a carrier of water and a low VOC (i.e., volatile organic compound) content—i.e. substantially free of VOC solvents. The first sub-layer **540** in the wet-state may then be cured or dried (optionally with the addition of heat) for a first time period, thereby forming the first sub-layer **540** atop the body **100**.

The resulting first sub-layer **540** may comprise a first sub-layer upper surface **541** and a first sub-layer lower surface **542** opposite the first sub-layer upper surface **541**. The first sub-layer **540** may have a first sub-layer thickness "t_{C1}" as measured from the first sub-layer upper surface **541** to the first sub-layer lower surface **542**. The first sub-layer thickness t_{C1} may range from 0.1 mils to 1.0 mils—including all values and sub-ranges there-between. The first sub-layer **540** may comprise a first sub-layer side surface **543** that extends from the first sub-layer upper surface **541** to the first sub-layer lower surface **542** and forms a perimeter of the first sub-layer **540**.

As previously discussed, the body **100** may be formed from a cellulosic material, which comprises pores. Thus, once the first sub-layer **540** is applied to one of the first major surface **111**, second major surface **112**, and/or side surface **113** of the body **100**, at least a portion of the first sub-layer **540** may penetrate into and seal the pores the cellulosic material in a direction extending from one of the first major surface **111**, second major surface **112**, and/or side surface **113** of the body **100** toward the center of the body **100**. The first sub-layer **540** in the wet-state may then be dried, optionally, at an elevated temperature, thereby rendering the first sub-layer **540** in the dry state.

The second sub-layer **550** may be formed by directly applying the previously discussed inorganic composition in the wet-state to the first sub-layer upper surface **541** of the first sub-layer **540**. In the wet-state, the second sub-layer **550** may be applied in an amount such that the second sub-layer **550** has a wet thickness ranging from about 0.1 mils to about 1.0 mils—including all values and sub-ranges there-between.

The inorganic composition may then be dried (optionally with the addition of heat) for a second time period of time, thereby forming the second sub-layer **550** atop the first sub-layer **540**. The resulting second sub-layer **550** may comprise a second sub-layer upper surface **551** and a second sub-layer lower surface **552** opposite the second sub-layer upper surface **551**. The second sub-layer **550** in the wet-state may be dried at a temperature ranging from about 190° F. to about 300° F.—including all temperatures and sub-ranges there-between. In a preferred embodiment, the second sub-layer **550** in the wet-state may be dried at a temperature ranging from about 200° F. to about 290° F.—including all temperatures and sub-ranges there-between.

The second sub-layer **550** may have a second sub-layer thickness "t_{C2}" as measured from the second sub-layer upper surface **551** to the second sub-layer lower surface **552**. The second sub-layer thickness t_{C2} may range from about 0.02 mils to about 0.7 mils. The second sub-layer **550** may comprise a second sub-layer side surface **553** that extends from the second sub-layer upper surface **551** to the second sub-layer lower surface **552** and forms a perimeter of the second sub-layer **550**.

The first sub-layer side surface **543** and the second sub-layer side surface **553** may form at least a portion of the

coating side surface **513**. Stated otherwise, the coating side surface **513** may comprise the first sub-layer side surface **543** and the second sub-layer side surface **553**. The overall coating thickness t_C of coating **500** may be the summation of the first sub-layer thickness t_{C1} and the second sub-layer thickness t_{C2}—as follows:

$$t_C = t_{C1} + t_{C2}$$

According to these embodiments, the first sub-layer lower surface **542** of the first sub-layer **540** may directly contact one of the first major surface **111**, the second major surface **112**, and/or the side surface **113** of the body **100**. The first sub-layer upper surface **541** may contact the second sub-layer lower surface **552** of the second sub-layer **550**. The second sub-layer upper surface **551** may form at least part of the upper coating surface **511** of the coating **500**. The first sub-layer lower surface **542** may form at least part of the lower coating surface **512** of the coating **500**. The second sub-layer upper surface **551** may form at least part of the upper major surface **11** of the building panel **10**.

The first sub-layer **540** may form a physical barrier that at least partially separates at least one of the first major surface **111**, the second major surface **112**, and/or the side surface **113** of the body **100** from the second sub-layer **550**. The physical barrier formed by the first sub-layer **540** may prevent at least some of the second sub-layer **550** (which comprises the glass-forming composition) from penetrating at least one of the first major surface **111**, the second major surface **112**, and/or the side surface **113** into the body **100** (e.g., a body **100** formed from cellulosic material having porous surfaces). According to some embodiments, the silicate glass heat-insulative barrier that is created by glass-forming composition of the second sub-layer **540** may be separated from at least one of the first major surface **111**, second major surface **112**, and/or side surface **113** of the body **100** by a distance equal to the first sub-layer thickness t_{C1}.

Referring now to FIG. **4**, other embodiments provide that the coating **500** may further comprise a third sub-layer **560** atop the second sub-layer **550**, which is atop the first sub-layer **540** that is atop one of the first major surface **111**, the second major surface **112**, and/or the side surface **113** of the body **100**. The third sub-layer **560** may be formed from a moisture barrier composition that imparts moisture barrier properties to the resulting third sub-layer **560**.

The third sub-layer **560** may be formed by applying the moisture barrier composition with the addition of one or more organic solvents. Non-limiting examples of organic solvents include toluene, ethanol, acetone, butyl acetate, methyl ethyl ketone, ethyl 3-ethoxypropionate. The barrier composition may be present relative to the organic solvent in a weight ratio ranging from about 5:1 to about 1:20. After application to the second sub-layer upper surface **551**, the moisture barrier composition may be dried for a third period of time, optionally at an elevated temperature, sufficient to drive off any organic solvent. The resulting third sub-layer **560** may be a continuous or discontinuous coating having a third sub-layer upper surface **561** and a third sub-layer lower surface **562** opposite the third sub-layer upper surface **561**.

In the wet-state, the third sub-layer **560** may be applied in an amount such that the third sub-layer **560** has a wet thickness ranging from about 1.0 mils to about 10.0 mils—including all values and sub-ranges there-between. After drying, the third sub-layer **560** in the dry-state may have a third sub-layer thickness "t_{C3}" as measured from the third sub-layer upper surface **561** to the third sub-layer lower surface **562**. The third sub-layer thickness t_{C3} may range from about 1 mils to about 6 mils. The third sub-layer **560** may comprise a third sub-layer side surface **563** that extends from the third sub-layer upper surface **561** to the third sub-layer lower surface **562** and forms a perimeter of the second sub-layer **560**.

According to such embodiments, the overall coating thickness t_C of coating **500** may be the summation of the first sub-layer thickness t_{C1}, the second sub-layer thickness t_{C2}, and the third sub-layer thickness t_{C3}—as follows:

$$t_C = t_{C1} + t_{C2} + t_{C3}$$

According to these other embodiments, the first sub-layer lower surface **542** of the first sub-layer **540** may contact the upper cellulosic surface **411** of the cellulosic layer **400**. The first sub-layer upper surface **541** may contact the second sub-layer lower surface **552** of the second sub-layer **550**. The second sub-layer upper surface **551** may contact the third sub-layer lower surface **562** of the third sub-layer **560**. The third sub-layer upper surface **561** may form at least part of the upper coating **511** of the coating **500**. The first sub-layer lower surface **542** may form at least part of the lower coating surface **512** of the coating **500**. The third sub-layer upper surface **561** may form at least part of the upper major surface **11** of the building panel **10**.

According to other embodiments, the coating **500** may comprise only the second sub-layer **550** and the third sub-layer **560** without the first sub-layer **540** (not pictured). In such embodiments, the second sub-layer **550** may be directly atop one of the first major surface **111**, second major surface **112**, and/or side surface **113** of the body **100** and the third sub-layer **560** may be directly atop the second sub-layer upper surface **551** of the second sub-layer **550**. In such embodiments, the second sub-layer **550** comprising the glass-forming composition of the inorganic composition acts as an insulative barrier capable of protecting the one of the first major surface **111**, second major surface **112**, and/or side surface **113** of the body **100** from fire.

According to other embodiments, the coating **500** may comprise only the second sub-layer **550**. In such embodiments, the second sub-layer **550** acts as a flame retardant layer and is capable of protecting one of the first major surface **111**, second major surface **112**, and/or side surface **113** of the body **100** by acting as an insulative barrier created from the glass-forming composition of the inorganic composition, in situations where moisture resistance of the coating is not required.

Referring now to FIGS. **2-4**, the body **100** may comprise a cellulosic layer **400**, whereby the coating **500** is applied directly to the cellulosic layer **400**. In other embodiments where the body **100** may be a laminate structure comprising multiple layers that includes a cellulosic layer **400** atop a substrate layer **200** with an adhesive layer **300** positioned there-between. The body **100** may also comprise the substrate layer **200** without the cellulosic layer **400** or adhesive layer **200**, whereby the coating **500** is applied to at least one surface of the substrate layer **200**—as discussed further herein.

Referring to FIG. **2**, the cellulosic layer **400** may comprise an upper cellulosic surface **411** and a lower cellulosic surface **412** opposite the upper cellulosic surface **411**. The cellulosic layer **400** may comprise a cellulosic side surface **413** that extends from the upper cellulosic surface **411** to the lower cellulosic surface **412** and forms a perimeter of the cellulosic layer **400**. The cellulosic side surface **413** may form a portion of the side surface **113** of the body **100**. Stated otherwise, the side surface **113** of the body **100** may comprise the cellulosic side surface **413**. The side surface **113** of

the body **100** may form a major side surface **13** of the building panel **10**. The first major surface **111** of the body **100** may comprise the upper cellulosic surface **411**.

The cellulosic layer **400** may have a cellulosic layer thickness "t_{CL}" as measured by the distance between the upper and lower cellulosic surfaces **411**, **412**. The cellulosic layer thickness t_{CL} may range from about 10 mils to about 3,000 mils—including all values and sub-ranges there-between. In some embodiments, the cellulosic layer **400** may form a veneer that is bonded to the substrate layer **200** by the adhesive layer **300**, whereby the cellulosic thickness t_{CL} may range from about 10 mils to about 100 mils—including all values and sub-ranges there-between. In other embodiments, the cellulosic layer **400** may form the entirety of the body **100**, whereby the cellulosic thickness t_{CL} may range from about 300 mils to about 3,000 mils—including all values and sub-ranges there-between.

The cellulosic layer **400** may be formed from a cellulosic material such as wood, bamboo, and a combination thereof, and may be naturally occurring or engineered. Non-limiting examples of wood include cherry, maple, oak, walnut, pine, poplar, spruce, chestnut, mahogany, rosewood, teak, ash, hickory, beech, birch, cedar, fir, hemlock, basswood, alder wood, obeche wood, and combinations thereof. The cellulosic layer **400** may comprise pores that are not only present within the body of the cellulosic layer **400** but also exposed on at least one of the upper cellulosic surface **411**, lower cellulosic surface **412**, and/or the cellulosic side surface **413**. The porosity of the cellulosic layer **400** will depend on the bamboo or type of wood selected as the material that forms the cellulosic layer **400**.

The benefit of using a cellulosic layer **400** is that the resulting building panel **10** will exhibit authentic decorative features **30** of real wood and/or bamboo (e.g., wood grain, knots, burl, etc.) while minimizing the overall thickness required for the building panel **10** without necessitating artificial print layers. Artificial print layers, such as those on various papers or plastics, have been used as a way to recreate wood grain, knots, burl, etc., while minimizing layer thickness. Such print layers, however, are undesirable because of the limited amount of variation the cellulosic pattern across a large number of panels as compared to the same large number of panels that use cellulosic layers formed from real wood and/or bamboo. Stated otherwise, artificial print layers are not preferred because of the repetition in the decorative pattern over large installation areas.

Although not limited to this embodiment, the coating **500** may be directly atop the upper cellulosic surface **411**, the lower cellulosic surface **412**, and/or the cellulosic side surface **413** of the cellulosic layer **400**. The coating **500** may be applied to the cellulosic layer **400** such that the lower coating surface **512** is in direct contact with the upper cellulosic layer surface **412**. In such embodiments, the lower coating surface **512** may directly contact the upper cellulosic surface **411**, such that the upper coating surface **511** forms at least a portion of the upper major surface **11** of the building panel **10**.

Referring now to FIG. **2**, according to some embodiments of the present invention the building panel **10** may include cellulosic layer **400** being adhesively bonded to the substrate layer **200** by an adhesive layer **300**. The combination of layers **200**, **300**, **400**, **500** of the present invention creates a laminate structure having high lamination integrity in a ceiling system under both standard conditions (i.e. daily operation of an interior building environment) but also during exposure to the extreme heat and temperature that may result from a fire.

The substrate layer **200** may comprises an upper substrate surface **211** and a lower substrate surface **212** that is opposite the upper substrate surface **211**. The substrate layer **200** may comprise a substrate side surface **213** that extends from the upper substrate surface **211** to the lower substrate surface **212** and forms a perimeter of the substrate layer **200**. The substrate side surface **213** may form a portion of the side surface **113** of the body **100**. Stated otherwise, the side surface **113** of the body **100** may comprise the substrate side surface **213**.

The substrate layer **200** may be formed from a metallic material, ceramic material, or composite material. Non-limiting examples of metallic material include aluminum, steel, and iron. In a preferred embodiment, the substrate layer **200** is formed from aluminum. The substrate layer **200** may have a substrate thickness "t_S" ranging from about 20 mils to about 100 mils—including all values and sub-ranges there-between. The substrate thickness t_S may range from about 25 mils to about 80 mils. In a preferred embodiment, the substrate thickness t_S ranges from about 30 mils to about 65 mils—including all values and sub-ranges there-between.

The adhesive layer **300** may comprises an upper adhesive surface **311** and a lower adhesive surface **312** opposite the upper adhesive surface **311**. The adhesive layer **300** may comprise an adhesive side surface **313** that extends from the upper adhesive surface **311** to the lower adhesive surface **312** and forms a perimeter of the adhesive layer **300**. The adhesive side surface **313** may form a portion of the side surface **113** of the body **100**. Stated otherwise, the side surface **113** of the body **100** may comprise the adhesive side surface **213**. The adhesive layer **300** may have an adhesive thickness "t_A" ranging from about 2 mils to about 20 mils—including all values and sub-ranges there-between—as measured from the upper adhesive surface **311** to the lower adhesive surface **312**. In a preferred embodiment, the adhesive thickness t_A ranges from about 5 mils to about 15 mils—including all values and sub-ranges there-between.

According to embodiments where the building panel **10** has the laminate structure, the overall panel thickness t_P of the building panel **10** may be the summation of the substrate thickness t_S, the adhesive thickness t_A, the cellulosic layer thickness t_{CL}, and the coating thickness t_C as follows:

$$t_P = t_S + t_A + t_{CL} + t_C$$

The upper substrate surface **211** of the substrate layer **200** may directly contact the lower adhesive surface **312** of the adhesive layer **300** and the upper adhesive surface **311** of the adhesive layer **300** may directly contact the lower cellulosic surface **412** of the cellulosic layer **400** such that the adhesive layer **300** adhesively bonds together the cellulosic layer **400** and the substrate layer **200**. The lower coating surface **512** may directly contact the upper cellulosic surface **411**, such that the upper coating surface **511** forms at least a portion of the upper major surface **11** of the building panel **10**. In such embodiments, the lower substrate surface **212** may form at least a portion of the lower major surface **12** of the building panel **10**.

The adhesive layer **300** may be formed from an adhesive composition that is a hot-melt composition, water-based polyvinyl acetate adhesive, and combinations thereof. According to the purposes of the present invention, the term "hot-melt adhesive composition" means a composition having a melt viscosity that ranges from about 10,000 centipoise to about 40,000 centipoise at a temperature of about 275° F.—including all values and sub-ranges there-between. The hot-melt adhesive composition may be solid at room temperature and be substantially free of solvent. The adhesive

composition may comprise adhesive polymer in an amount ranging from about 50 wt. % to about 100 wt. % based on the total weight of the adhesive composition—including all values and sub-ranges there-between.

The adhesive polymer according to the present invention may be a thermoplastic polymer. Non-limiting examples of the thermoplastic polymer may include moisture cured polyester modified polyurethane polymers. Such polyester modified polyurethanes may be formed by reacting organic diisocyanate with difunctional polyester polyol and low molecular weight diols (as chain-extending agents) at a non-limiting NCO:OH ratio of about 0.7:1 to about 1.3:1—including all sub-ranges and ratios there-between.

Non-limiting examples of polyester polyol include difunctional polyester diols containing alcoholic hydroxyl groups. Suitable polyester diols are polyester having average molecular weights of from 800 to 5000 and preferably from 2000 to 4000 produced from (i) dicarboxylic acids containing at least 6 carbon atoms, such as adipic acid, pimelic acid, suberic acid, azelaic acid and/or sebacic acid (preferably adipic acid, as the sole acid component) and (ii) alkane diols that may contain at least 4 carbon atoms, such as, for example, 1,4-dihydroxy-butane, 1,5-dihydroxypentane and/or 1,6-dihydroxy-hexane. Polycondensates of ω-hydroxyalkane-mono-carboxylic acids and the polymers of their lactones are also suitable, although less preferred.

Low molecular weight diols suitable as chain-extending agents in accordance with the present invention include, in particular, aliphatic diols having average molecular weight of from 62 to 400 or mixtures thereof. Non-limiting examples of such diols include ethylene glycol, 1,3-dihydroxy-propane, 1,4-dihydroxy-butane, 1,5-dihydroxypentane, 1,6-dihydroxyhexane, and the like.

Non-limiting examples of suitable aromatic polyisocyanates include all isomers of toluylene-diisocyanate (TDI), naphthalene-1,5-diisocyanate, diphenylmethane-4,4'-diisocyanate (MDI), diphenylmethane-2,4'-diisocyanate and mixtures of 4,4'-diphenylmethane-diisocyanate with the 2,4' isomer or mixtures thereof with oligomers of higher functionality (so-called crude MDI), xylylene-diisocyanate (XDI), 4,4'-diphenyl-dimethylmethane-diisocyanate, di- and tetra-alkyl-diphenylmethane-diisocyanate, 4,4'-dibenzyl-diisocyanate, 1,3-phenylene-diisocyanate and 1,4-phenylene-diisocyanate. Examples of suitable cycloaliphatic polyisocyanates are the hydrogenation products of the above-mentioned aromatic diisocyanates, such as 4,4'-dicyclohexylmethane-diisocyanate (H_{12}MDI), 1-isocyanatomethyl-3-isocyanato-1,5,5-trimethyl-cyclohexane (isophorone-diisocyanate, IPDI), cyclohexane-1,4-diisocyanate, hydrogenated xylylene-diisocyanate (H_6XDI), 1-methyl-2,4-diisocyanato-cyclohexane, m- or p-tetramethylxylene-diisocyanate (m-TMXDI, p-TMXDI) and dimer-fatty acid diisocyanate. Examples of aliphatic polyisocyanates are tetramethoxybutane-1,4-diisocyanate, butane-1,4-diisocyanate, hexane-1,6-diisocyanate (HDI), 1,6-diisocyanato-2,2,4-trimethylhexane, 1,6-diisocyanato-2,4,4-trimethylhexane and 1,2-dodecane-diisocyanate (C_{12}DI).

The adhesive composition of the present invention may further comprise additives selected from the group consisting of 2,2'-dimorpholinethyl ether catalyst, di(2,6-dimethylmorpholinoethyl)ether catalyst, adhesion promoters, diluents, plasticizers, fillers, antioxidants pigments, UV absorbers and combinations thereof. In other embodiments, the adhesive composition may further comprise a flame retardant. Non-limiting examples of flame retardant may include ammonium hydroxide, magnesium hydroxide, huntite, hydromagnesite, silica, polyphosphate, melamine cyanurate, chloride salts—such as sodium chloride, antimony oxide, and borates, such as calcium borate, magnesium borate, zinc borate, and combinations thereof. The flame retardant may be present in the adhesive composition in an amount ranging from about 0 wt. % to about 50 wt. % based on the total weight of the adhesive composition—including all values and sub-ranged there-between.

The building panel **10** of FIG. **2** may be formed heating the adhesive composition to an application temperature ranging from about 120° C. to about 165° C., and applying the adhesive composition to at least one of the upper substrate surface **211** or the lower cellulosic surface **412**. The adhesive composition may be applied by roll coating, spray coating, dip coating, or the like. Within the open time of the adhesive (typically 30 to 60 seconds), the upper substrate surface **211** is mated to the lower cellulosic surface **412** with the adhesive composition being present there-between, thereby bonding the upper substrate surface **211** to the lower cellulosic surface **412** via the adhesive composition. Pressure may then be applied to at least one of the upper cellulosic surface **411** of the cellulosic layer **400** or the lower substrate surface **212** of the substrate layer **200** to ensure proper adhesive bonding.

Each sub-layer **540**, **550**, **560** may be individually applied by spray, roll-coating, dip coating, curtain coating, brushing, blade coating, or the like. Specifically, the first sub-layer **540** may be applied to the upper cellulosic surface **411** of the cellulosic layer **400**. The first sub-layer **540** may then be optionally heated to a temperature ranging from about 150° F. to about 250° F. to partially or fully cure the first sub-layer **540**. In a preferred embodiment, the first sub-layer **540** may then be heated to a temperature ranging from about 150° F. to about 175° F. to partially or fully cure the first sub-layer **540**. The second sub-layer **550** may then be applied to the first sub-layer supper surface upper surface **541**. The second sub-layer **550** may then be optionally heated to a temperature ranging from about 150° F. to about 250° F. to partially or fully cure the second sub-layer **550**.

The third sub-layer **560** may then be applied to the second sub-layer upper surface **551**. The third sub-layer **560** may then be optionally heated to a temperature ranging from about 15° C. to about 90° C. to partially or fully cure the third sub-layer **560**—thereby resulting in the laminate structure of the present invention. The laminate structure may then be heated in an oven to fully cure the adhesive layer **300** and the coating **500** for a fourth period of time.

According to the present invention, the low drying temperature of each of the first and second sub-layers **540**, **550** allow for the cellulosic layer **400** to retain residual moisture therein. When the resulting building panel **10** is subject to high heat (e.g., during a fire), the residual moisture contained within the cellulosic layer **400** may be converted to a gaseous state, thereby causing the resulting silicate glass to bulge outward form the cellulosic layer **400**. The silicate glass is strong enough that even under such deformation, the resulting coating **500** does not fracture (e.g., pop). By allowing for such low drying temperatures, the first and/or second sub-layer formulations of the present invention enhance the insulative barrier properties by creating a bubble in the coating **500** during exposure to high heat that further separates the underlying cellulosic layer **400** from the surround flames.

According to the present invention, the coating **500** applied to the cellulosic layer **400** provides an aesthetically pleasing building panel **10** such that the decorative features **30** of the cellulosic layer are visible from the upper major surface **11** of the building panel **10** because the decorative

coating **500** is substantially clear. Furthermore, the inorganic composition of the coating **500** helps provide an insulative heat-barrier to the cellulosic layer **400**, thereby helping prevent the cellulosic layer **400** from igniting during a fire and propagating through the building panel **10**.

Referring to FIG. **5**, the building panel **10** of the present invention may be a ceiling panel (as shown installed in the ceiling system of FIG. **5**), a wall panel, or the like. The lower major surface **12** of the ceiling panel **10** of the present invention may face the plenum space **3** of an interior space of a ceiling system **1**. The upper major surface **11** of the ceiling panel **10** of the present invention may face the active space **2** of an interior space of a ceiling system **1**.

In non-exemplified embodiments, the present invention may include a building panel having an upper major surface opposite a lower major surface, the building panel comprising a cellulosic layer (also referred to as "cellulosic body" in this embodiment) and a coating. The cellulosic body is self-supporting and comprises an upper cellulosic surface and a lower cellulosic surface opposite the upper cellulosic surface. Non-limiting examples of a cellulosic body may include MDF board, wooden planks, or the like. The cellulosic body may have a cellulosic body thickness as measured from the lower cellulosic surface to the upper cellulosic surface that ranges up to about 3 inches—including all values and sub-ranges there-between.

With the coating **500** being formed at drying temperatures as low as 150° F., the cellulosic body may at least partially retain pre-existing moisture already contained within the cellulosic body. The surprising benefit of retaining the pre-existing moisture is that during exposure to high-heat, the retained moisture is converted to steam and driven out of the cellulosic body. As the steam escapes from the body **100**, the glass layer formed from the coating **500** is pushed outward from the body **100**, thereby increasing the distance between the body **100** and the surrounding flame or high-heat—thereby decreasing the likelihood that the body **100** ignites. Stated otherwise, it has been surprisingly discovered that the coatings **500** of the present invention further enhance fire repellency in the building panels **10** by allowing for drying temperatures below 212° F. under atmospheric conditions (at 1 atm).

The building panel **10** of such embodiments may have the coating **500** applied to at least one of the upper cellulosic surface **411** or the lower cellulosic surface **412** of the cellulosic layer **400**. The coating **500** comprises an upper coating surface **511** opposite a lower coating surface **512**, whereby the lower coating surface **512** of the coating **500** may directly contact the upper cellulosic surface **411** of the cellulosic body **400**. The coating **500** comprises at least the second sub-layer **550** and optionally the first sub-layer **540** and/or the third sub-layer **560**, as previously discussed. The upper major surface **11** of the building panel **10** may comprise the upper coating surface **511** of the coating **500**. According to some embodiments, the lower major surface **12** of the building panel **10** may be uncoated, whereby the lower major surface **12** of the building panel **10** does not comprise the coating **500**, but rather the lower cellulosic surface **412** or the lower substrate surface **212**.

Referring now to FIGS. **6-8**, a building panel **1010** and ceiling system **1001** are illustrated in accordance with another embodiment of the present invention. The building panel **1010** is similar to the building panel **10** except as described herein below. The description of the building panel **10** above generally applies to the building panel **1010** described below except with regard to the differences specifically noted below. A similar numbering scheme will be used for the building panel **1010** as with the building panel **10** except that the 1000-series of numbers will be used. Additionally, the ceiling system **1001** is similar to the ceiling system **1** except as described herein below. The description of the ceiling system **1** above generally applies to the ceiling system **1001** described below except with regard to the differences specifically noted below. A similar numbering scheme will be used for the ceiling system **1001** as with the ceiling system **1** except that the 1000-series of numbers will be used.

The coating **1500** of the present invention may be applied to one of the first major surface **1111**, second major surface **1112**, and/or side surface **1113** of the body **1100**. In a preferred embodiment, the coating **1500** is applied to each of the first major surface **1111**, the second major surface **1112**, and the side surface **1113** of the body **1100** such that the coating **1500** encapsulates the body **1100**. Stated otherwise, the coating **1500** may form a continuous barrier that substantially surrounds the entire body **1100**.

Although not pictured, the coating **1500** of this embodiment comprises the second sub-layer **550**, and may further comprise each of the first sub-layer **540** and/or third sub-layer **560**, as previously discussed with respect to FIGS. **2-4**.

In these embodiments, the body **1100** may formed entirely from the cellulosic layer **400**. The body **1100** may alternatively be formed from the laminate structure. According to the embodiments where the body **1100** is formed entirely from the cellulosic layer **400**, the overall panel thickness t_P may be the summation of cellulosic layer thickness t_{CL}, and the coating thickness t_C as follows:

$$t_P = t_{CL} + [n \times t_C]$$

whereby the "n" refers to the number of major surfaces of the body **1100** coated with the coating **1500**. In this embodiment, the first and second major surfaces **1111**, **1112** of the body **1100** are coated and n=2. In such embodiments, the panel thickness t_P may range from about 500 mils to about 2,000 mils—including all values and sub-ranges there-between.

According to the embodiments where the body **1100** is formed entirely from the substrate layer **200**, the overall panel thickness t_P may be the summation of substrate layer thickness t_S, and the coating thickness t_C as follows:

$$t_P = t_S + [n \times t_C]$$

whereby the "n" refers to the number of major surfaces of the body **1100** coated with the coating **1500**. In this embodiment, the first and second major surfaces **1111**, **1112** of the body **1100** are coated and n=2. In such embodiments, the panel thickness t_P may range from about 100 mils to about 600 mils—including all values and sub-ranges there-between.

Referring now to FIG. **8**, the building panel **1010** of these embodiments may be installed into a ceiling system **1001** comprising a support **1005** that includes a first support member **1005***a* and a second support member **1005***b*. The first and second support members **1005***a*, **1005***b* may be arranged in an intersecting pattern to form a support grid. A plurality of the building panels **1010** may be arranged in an array and attached to the support grid such that the upper major surface of one building panel **1010** faces the lower major surface of a second building panel **1010** that is adjacent to the first building panel **1010**. The plurality of the building panels **1010** may also be arranged and attached to the support grid such that the plurality of building panels **1010** comprises a first side **1041** opposite a second side **1042**, whereby the first side **1041** faces the plenum **1003** and

the second side **1042** faces the room environment **1002**—the first and second sides **1041**, **1042** comprises the side surface **1013** of the building panels **1010**.

The following examples are prepared in accordance with the present invention. The present invention is not limited to the examples described herein.

EXAMPLES

Experiment 1

A first experiment was performed to test the water-impervious nature of the barrier coatings of the present invention. The first set of experiments were prepared by applying barrier coating compositions to building panels pre-coated with an inorganic flame-retardant coating.

Each barrier coating of this experiment was formulated using the following:

Latex 1—styrene-acrylic polymer emulsion having a solids content of about 40 wt. %, a pH of about 8.5, and a glass transition temperature of about 36° C.

Latex 2—vinyl-acrylic polymer emulsion having a solids content of about 55 wt. %, a pH of about 5.0, and a glass transition temperature of about 19° C.

Latex 3—polyvinyl acetate polymer emulsion having a solids content of about 50 wt. %, a pH of about 7.0, and a glass transition temperature of about 37° C.

Latex 4—acrylic polymer emulsion having a solids content of about 33 wt. % and a glass transition temperature of about 10° C. The polymer of Latex 4 is 100% acrylic polymer

Polyurethane—polyurethane emulsion having a solids content of about 33 wt. %

Oil 1—chain-stopped short oil alkyd emulsion having a solids content of about 51 wt. %, a pH of about 7.0—8.0, and formed from an oil resin comprising less than 40 wt. % of fatty acids

Oil 2—chain-stopped medium oil alkyd emulsion having a solids content of about 55 wt. %, a pH of about 7.6 and formed from an oil resin comprising 40 wt. % to 60 wt. % of fatty acids

Oil 3—medium oil of polyurethane alkyd emulsion having a solids content of about 40 wt. %, a pH of about 7.0—8.0 and formed from an oil resin comprising 40 wt. % to 60 wt. % of fatty acids

Wax—wax emulsion having a solids content of about 40 wt. % and a pH ranging from about 8.0 to 10.0

Silane—(3-glycidoxypropyl) trimethoxysilane

Additive—blend of defoamer and non-ionic dispersant

Drying Agent—metal-based catalyst drying agent

Each barrier coating formulation was applied to a substrate and dried to a solid's content of >99%. Subsequently 1 cc of water was applied to each dried barrier coating, forming a localized puddle atop the barrier coating. The liquid water repellency of each barrier coating was characterized by the total amount of time between first application of the water and when each puddle began to soak into the barrier coating (or when the surface tension on the barrier coating breaks). The composition of each barrier coating as well as the resulting liquid water repellency are set forth below in Table 1.

TABLE 1

	Comp. Ex. 1	Comp. Ex. 2	Comp. Ex. 3	Comp. Ex. 4	Ex. 1	Ex. 2	Ex. 3	Ex. 4
Water (wt. %)	39.5	39.5	39.5	32.2	39.5	32.2	36.1	22.8
Latex 1 (wt. %)	49.4	—	—	—	—	—	—	—
Latex 2 (wt. %)	—	49.4	—	—	—	—	—	—
Latex 3 (wt. %)	—	—	49.4	—	—	—	—	—
Latex 4 (wt. %)	—	—	—	—	49.4	—	45.2	66.7
Polyurethane (wt. %)	—	—	—	—	—	—	10.8	—
Wax (wt. %)	7.9	7.9	7.9	—	7.9	—	4.5	—
Oil 1 + Drying Agent	—	—	—	65.0	—	—	—	—
Oil 2 + Drying Agent	—	—	—	—	—	65.0	—	—
Oil 3 + Drying Agent	—	—	—	—			—	8.2
Silane (wt. %)	1.7	1.7	1.7	2.0	1.7	2.0	2.0	2.0
Additive	1.5	1.5	1.5	0.8	1.5	0.8	1.4	0.3
Total (wt. %)	100.0	100.0	100.0	100.0	100.0	100.0	100.0	100.0
Solid's Content	25.3	32.8	30.3	35.1	29.3	37.7	29.7	37.5
Liquid Water Repellency (minutes)	80	60	30	120	180	210	240	300
Water Vapor Permeable	Yes	Yes	Yes	Yes	Yes	Yes	Yes	Yes

As demonstrated by Table 1, the barrier coating composition of Examples 1, 3, and 4—which comprise a blend of (i) latex polymer having a glass transition temperature of less than 18° C. and (ii) at least one co-component that is an emulsion provides an unexpected improvement in liquid-barrier performance by preventing soak-in or breakage in surface tension for at least 3 hours.

As also demonstrated by Table 1, the barrier coating composition of Example 2—which comprise an oil formed from an oil resin comprising 40 wt. % to 60 wt. % of fatty acids provides an unexpected improvement in liquid-barrier performance by preventing soak-in or breakage in surface tension for at least 3 hours.

Experiment 2

A second experiment was performed to test the improvement in bonding strength between the barrier coating and the inorganic flame-retardant coating due to the silane adhesion promoter of the present invention. This experiment tested the following silane adhesion promoters.

Silane 1 ("Silane 1")—3-methacryloxypropyl trimethoxysilane

Silane 2 ("Silane 2")—N-2-(Aminoethyl)-3-aminopropylmethyldimethoxysilane

Silane 3 ("Silane 3")—Aminoethyl aminopropyl trimethoxysilane

Silane 4 ("Silane 4")—Vinyl trimethoxysilane

Silane 5 ("Silane 5")—3-Acryloxypropyl trimethoxysilane

Silane 6 ("Silane 6")—3-Glycidoxypropyl trimethoxysilane

Starting with the coating composition of Example 2, five barrier coating compositions were prepared replacing the silane of Example 2 with silanes 1-5. The five barrier coating compositions were then applied to building panels comprising an inorganic flame-retardant coating of the present invention. Specifically, the barrier coatings were applied directly to the inorganic flame-retardant coatings. Each barrier coating was then dried to a solids content of >99% and tested for adhesion strength to the inorganic flame-retardant coating using ASTM test method D3359 (also referred to as "cross hatch" test). The crosshatch test includes making a crosshatch pattern through the barrier coating and inorganic flame-retardant coating to the underlying substrate. The detached flakes of barrier coating are removed by brushing with a soft brush. Pressure-sensitive tape is applied over the crosshatch cut, and the tape is smoothed into place by using a pencil eraser over the area of the incisions. Tape is removed by pulling it off rapidly back over itself as close to an angle of 180°. The amount of barrier coating that remains adhered can be assessed and assigned a value on a 0 to 5 scale—0 being the worst adhesion and 5 being perfect adhesion. The type of silane 1-5 and corresponding adhesion strength between the barrier coating and underlying inorganic flame-retardant coating composition is listed below in Table 2.

TABLE 2

	Comp. Ex. 5	Comp. Ex. 6	Comp. Ex. 7	Comp. Ex. 8	Comp. Ex. 9	Ex. 5
Coating	95	95	95	95	95	95
Composition (wt. %)	—	—	—	—	—	—
Silane 1 (wt. %)	5	—	—	—	—	—
Silane 2 (wt. %)	—	5	—	—	—	—
Silane 3 (wt. %)	—	—	5	—	—	—
Silane 4 (wt. %)	—	—	—	5	—	—
Silane 5 (wt. %)	—	—	—	—	5	—
Silane 6 (wt. %)	—	—	—	—	—	5
Cross Hatch Test Results	0 B	0 B	0 B	0 B	0 B	5 B

As demonstrated by Table 2, the using silane 6 in combination with the barrier coating of the present invention provides an unexpected vast improvement in adhesion strength when using with the inorganic flame-retardant coatings of the present invention.

Additionally, two additional comparative coatings were prepared using the coating formulation of Example 2 except that in place of silane agents, non-silane based adhesion promoters were blended into the coating composition. Such non-silane adhesion promoters included the following:

Polyester Adhesion Promoter ("Polymer 1")

High molecular weight block copolymer ("Polymer 2")

Each of the comparative coatings using Polymer 1 and Polymer 2 resulted in a OB adhesion strength for the top coating.

Experiment 3

A third experiment was performed to test the adhesion strength when using the silane agents added to the inorganic coating. For this experiment, Silane 2 was blended with the inorganic coating composition and a barrier coating was applied thereto. The barrier coating of this experiment did not contain silane adhesion promoter. In this experiment, the resulting adhesion strength of the barrier coating was measured to be 4/5B. Therefore, while Silane 2 was found to provide inadequate adhesion strength when added to the barrier coating, it was surprisingly discovered to help provide proper adhesion strength when added to the inorganic coating.

Experiment 4

A fourth experiment was performed to test the show the unexpected advantage gained by using the combination of flame retardants in the barrier coatings of the present invention. The third experiment was performed by blending together the barrier coating composition of the present invention with various flame retardants. Each flame-retardant containing barrier coating composition was then applied to a major surface of a building panel and dried to a solids content of >99%.

Each coated building panel was then positioned above a Bunsen burner angled at 30°, whereby the coated major surface faces the flame from the Bunsen burner. Each surface was exposure for a set predetermined amount of time, after which the amount of flame spread on each specimen was measured and assigned a value—the lower the Flame Spread Rating ("FSR") value, the better the coating was at imparting flame-retardancy to the underlying substrate.

TABLE 3

	Comp. Ex. 10	Comp. Ex. 11	Comp. Ex. 12	Comp. Ex. 13	Ex. 6	Ex. 7
Coating Composition (wt. %)	100	80	80	80	80	80
Alumina Trihydrate	—	20	—	—	10	10
Calcium Borosilicate	—	—	20	—	10	—
Zinc Borate	—	—	—	20	—	10
Flame Spread Rate	26	21	39.5	31	8.5	14.5

As demonstrated by Examples 6 and 7 in Table 3, using a blend of two or more flame retardants in the barrier coatings of the present invention provided an unexpected improvement in overall flame-retardancy when compared to using a single flame retardant in the same overall amount. Additionally, as demonstrated by Example 4, it was surprisingly discovered that calcium borosilicate can provide extreme flame-retardancy when combined with a second flame retardant (in this example, alumina trihydrate) as compared to using calcium borosilicate individuals (as shown in Comp. Ex. 12), which performed worse than a barrier coating having no flame retardant at all (compare Comp. Ex. 10 to Comp. Ex. 12).

What is claimed is:

1. A barrier coating composition comprising:

a liquid carrier in an amount ranging from about 5 wt. % to about 50 wt. % based on the total weight of the barrier coating composition;

an organic blend comprising a first component and a second component, the first component comprising latex polymer and the second component being selected from polyurethane emulsion, wax emulsion, and alkyd emulsion; and

alumina trihydrate;

wherein the first component and the second component are present in a weight ratio ranging from about 2:1 to about 20:1;

wherein the latex polymer comprises acrylic polymer; and

wherein the latex polymer has a glass transition temperature of less than about 18° C.

2. The barrier coating composition according to claim **1**, wherein the second component is polyurethane emulsion,

wherein the ratio of the first component to the second component ranges from about 2.5:1 to about 10:1.

3. The barrier coating composition according to claim **1**, wherein the organic blend further comprises a third component that is different from each of the first and second components, wherein the third component is a wax emulsion.

4. The barrier coating composition according to claim **1**, wherein the second component is alkyd emulsion, wherein the ratio of the first component to the second component ranges from about 3.5:1 to about 15:1.

5. The barrier coating composition according to claim **1**, wherein the barrier coating composition further comprises a silane adhesion promoter, wherein the silane adhesion promoter is selected from a glycidyl-functional compound, a compound comprising alkoxy groups, and blends thereof.

6. The barrier coating composition according to claim **5**, wherein the organic blend and the silane adhesion promoter are present in a weight ratio ranging from about 4:1 to about 100:1.

7. A barrier coating composition comprising:

a liquid carrier comprising water;

a blend of a medium chain-stopped oil alkyd emulsion and metal-based catalyst drying agent;

a silane adhesion promoter; and

a first flame retardant comprising one or more of alumina trihydrate, calcium borosilicate, and zinc borate and a second flame retardant that is different than the first flame retardant, the second flame retardant comprising one or more of alumina trihydrate, calcium borosilicate, and zinc borate;

wherein the first flame retardant and the second flame retardant are present at a ratio ranging from about 1:2 to about 2:1;

wherein the chain-stopped oil alkyd emulsion and the adhesion promoter are present in a ratio ranging from about 20:1 to about 40:1; and

wherein the liquid carrier is present in an amount ranging from about 5 wt. % to about 50 wt. % based on the total weight of the barrier coating composition.

8. The barrier coating composition according to claim **7**, wherein the blend further comprises a polyurethane emulsion, wherein the medium chain-stopped oil alkyd emulsion and the polyurethane emulsion are present in a weight ratio ranging from about 5:1 to about 15:1.

9. The barrier coating composition according to claim **7**, wherein the silane adhesion promoter comprises 3-glycidoxypropyl trimethoxysilane.

10. The barrier coating composition according to claim **7**, wherein the silane adhesion promoter comprises alkoxy groups.

11. A barrier coating composition comprising a blend of:

an organic blend comprising a first component and a second component, the first component being different from the second component;

a flame-retardant composition comprising a first flame retardant and a second flame retardant, the first flame retardant and the second flame retardant being different;

wherein the first flame retardant and the second flame retardant are present in a weight ratio ranging from about 3:1 to about 1:3;

wherein the first flame retardant comprises alumina trihydrate; and

wherein the second flame retardant comprises one of calcium borosilicate and zinc borate.

12. The barrier coating composition according to claim **11**, wherein the flame-retardant composition comprises a third flame retardant that is different from the first and second flame retardant, wherein the third flame retardant is selected from the group of alumina trihydrate, calcium borosilicate, and zinc borate.

13. The barrier coating composition according to claim **11**, wherein the second flame retardant is calcium borosilicate.

14. The barrier coating composition according to claim **11**, wherein the second flame retardant is zinc borate.

15. The barrier coating composition according to claim **11**, wherein the barrier coating composition further comprises a liquid carrier in an amount ranging from about 5 wt. % to about 50 wt. % based on the total weight of the barrier coating, wherein the liquid carrier comprises water.

16. The barrier coating composition according to claim **11**, wherein the first component comprises latex polymer.

17. The barrier coating composition according to claim **16**, wherein the latex polymer comprises acrylic polymer.

18. The barrier coating composition according to claim **1** wherein the second component comprises an alkyd emulsion with a metal-based catalyst drying agent.

19. The barrier coating composition according to claim **7**, wherein the medium chain-stopped oil alkyd emulsion comprises a metal-based catalyst drying agent.

20. The barrier coating composition according to claim **11**, wherein the organic blend comprises an alkyd emulsion with a metal-based catalyst drying agent.

* * * * *