US012409978B2

(12) **United States Patent**
Porchia et al.

(10) **Patent No.: US 12,409,978 B2**
(45) **Date of Patent: Sep. 9, 2025**

(54) **CLOSURE SYSTEM FOR POUCH OR CONTAINER**

(71) Applicant: **S. C. JOHNSON & SON, INC.**, Racine, WI (US)

(72) Inventors: **Jose Porchia**, Saginaw, MI (US); **Jeramy M. Dubay**, Hope, MI (US)

(73) Assignee: **S. C. JOHNSON & SON, INC.**, Racine, WI (US)

(*) Notice: Subject to any disclaimer, the term of this patent is extended or adjusted under 35 U.S.C. 154(b) by 82 days.

(21) Appl. No.: **18/134,450**

(22) Filed: **Apr. 13, 2023**

(65) **Prior Publication Data**

US 2024/0343450 A1 Oct. 17, 2024

(51) **Int. Cl.**
B65D 33/25 (2006.01)
B65D 33/00 (2006.01)

(52) **U.S. Cl.**
CPC ***B65D 33/2541*** (2013.01); ***B65D 33/007*** (2013.01)

(58) **Field of Classification Search**
CPC . B65D 33/2541; B65D 33/007; B65D 33/255
USPC 383/63
See application file for complete search history.

(56) **References Cited**

U.S. PATENT DOCUMENTS

4,941,238 A 7/1990 Clark
5,070,584 A * 12/1991 Dais B65D 33/255 24/585.12
5,138,750 A 8/1992 Gundlach et al.
5,140,727 A 8/1992 Dais et al.
5,509,734 A 4/1996 Ausnit
5,647,100 A * 7/1997 Porchia B65D 33/2558 24/585.12
5,962,040 A * 10/1999 Dais B65D 33/255 425/290

(Continued)

FOREIGN PATENT DOCUMENTS

EP 0510797 A1 10/1992
JP 2004026193 A 1/2004

(Continued)

OTHER PUBLICATIONS

Machine translation of JP 2018008728 A (Year: 2020).*
PCT International Search Report and Written Opinion, Application No. PCT/US2024/023848, Aug. 28, 2024, 14 pages.

Primary Examiner — Jes F Pascua
(74) *Attorney, Agent, or Firm* — Quarles & Brady LLP

(57) **ABSTRACT**

A container made entirely from an elastomer includes a body with a front wall and a rear wall that is connected to the front wall along a peripheral edge. The container further includes a closure system comprising a front side having a male closure profile that includes a male closure element and a rear side having a female closure profile. The female closure profile includes a female closure element and defines a cavity. A centerline extends through the cavity such that the female closure element is symmetrical about the centerline. The male closure element includes a head portion that has a primary profile and a secondary profile that extends from the primary profile. A height of the secondary profile measured in a direction that is perpendicular to the centerline is greater than a height of the primary profile measured in a direction that is perpendicular to the centerline.

21 Claims, 21 Drawing Sheets

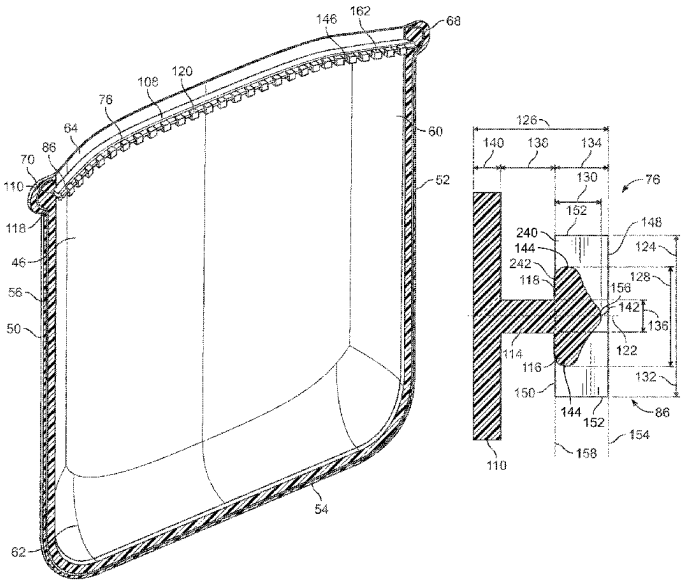

(56) **References Cited**

U.S. PATENT DOCUMENTS

5,988,880	A	11/1999	Tomic
6,185,796	B1	2/2001	Ausnit
6,234,676	B1	5/2001	Galomb et al.
6,953,542	B2	10/2005	Cisek
7,189,001	B2	3/2007	Gerrits
7,270,479	B2	9/2007	Nelson
7,857,515	B2	12/2010	Dais et al.
8,469,593	B2	6/2013	Price et al.
8,827,556	B2	9/2014	Dais et al.
9,371,153	B1	6/2016	Nouri et al.
10,618,697	B2	4/2020	Price et al.
11,084,628	B2	8/2021	Finell et al.
11,097,505	B2	8/2021	Denis et al.
11,104,487	B2	8/2021	Septien Rojas et al.
RE48,721	E	9/2021	Nouri et al.
11,180,286	B2	11/2021	Pawloski
11,358,755	B2	6/2022	Finell et al.
11,383,890	B2	7/2022	Finell et al.
11,505,368	B2	11/2022	Woo et al.
2003/0223654	A1	12/2003	Gerrits
2008/0240625	A1	10/2008	McCracken et al.
2011/0069911	A1	3/2011	Ackerman et al.
2012/0106874	A1	5/2012	Pawloski
2015/0049962	A1*	2/2015	Bois B65D 33/25 383/63
2018/0184767	A1	7/2018	Oike et al.
2020/0239194	A1	7/2020	Yosufy
2021/0214129	A1	7/2021	Woo et al.
2021/0323731	A1	10/2021	Finell et al.
2022/0402658	A1	12/2022	DeCarlo et al.

FOREIGN PATENT DOCUMENTS

JP	2018008728	A	*	1/2018
KR	200491587	Y1	*	5/2020
WO	2009090674	A2		7/2009
WO	2020240448	A1		12/2020
WO	2020240449	A1		12/2020
WO	2020240450	A1		12/2020

* cited by examiner

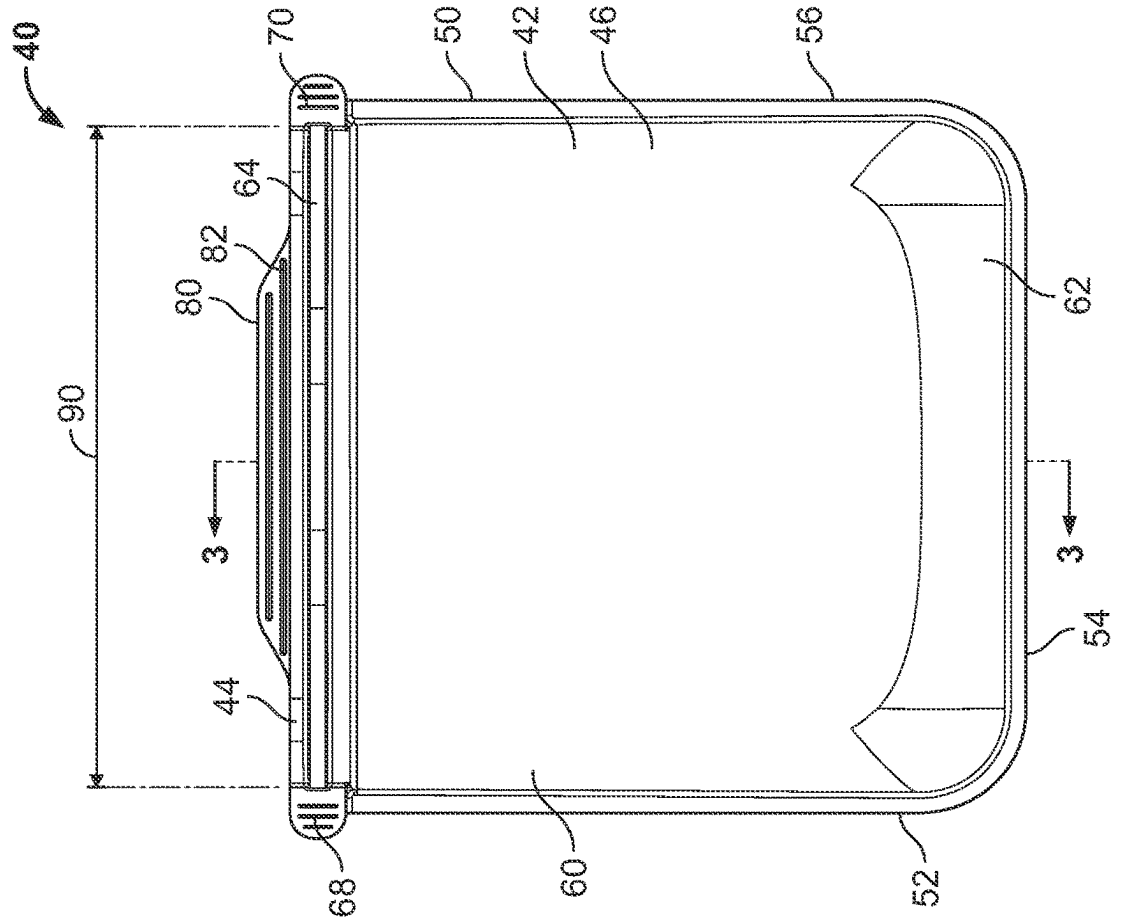
40
70
50
42
46
56
64
82
80
90
3
3
62
44
54
68
60
52

FIG. 2

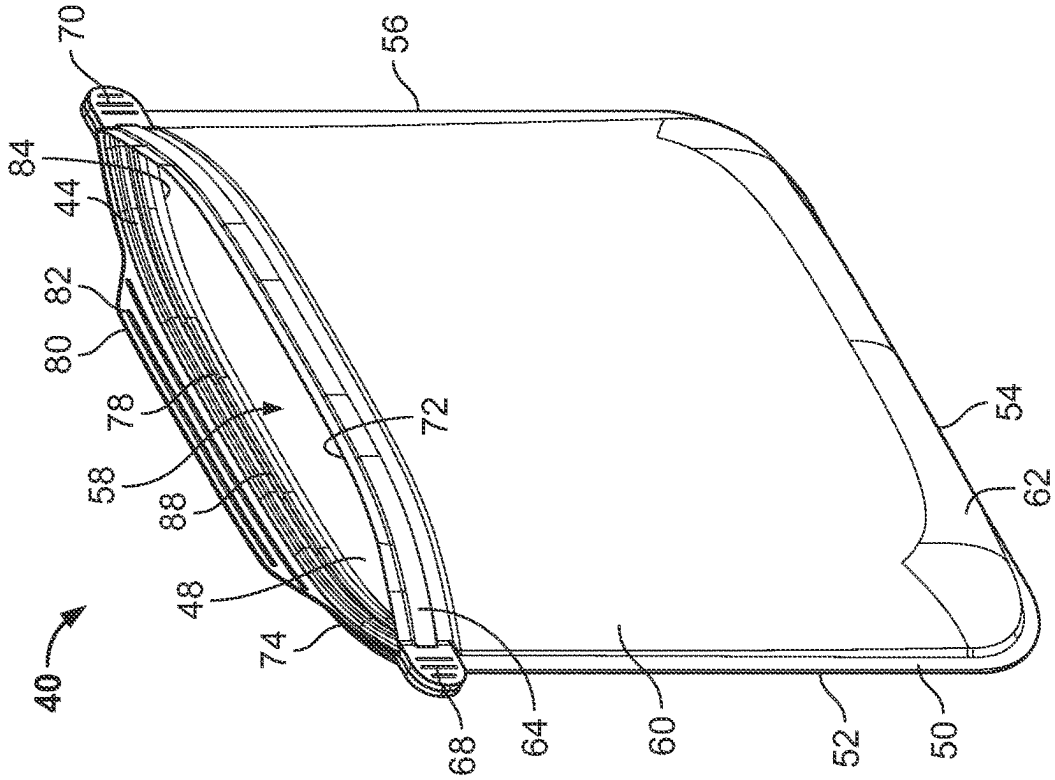
70
56
84
44
82
80
78
58
88
48
74
72
40
68
64
60
52
50
54
62

FIG. 1

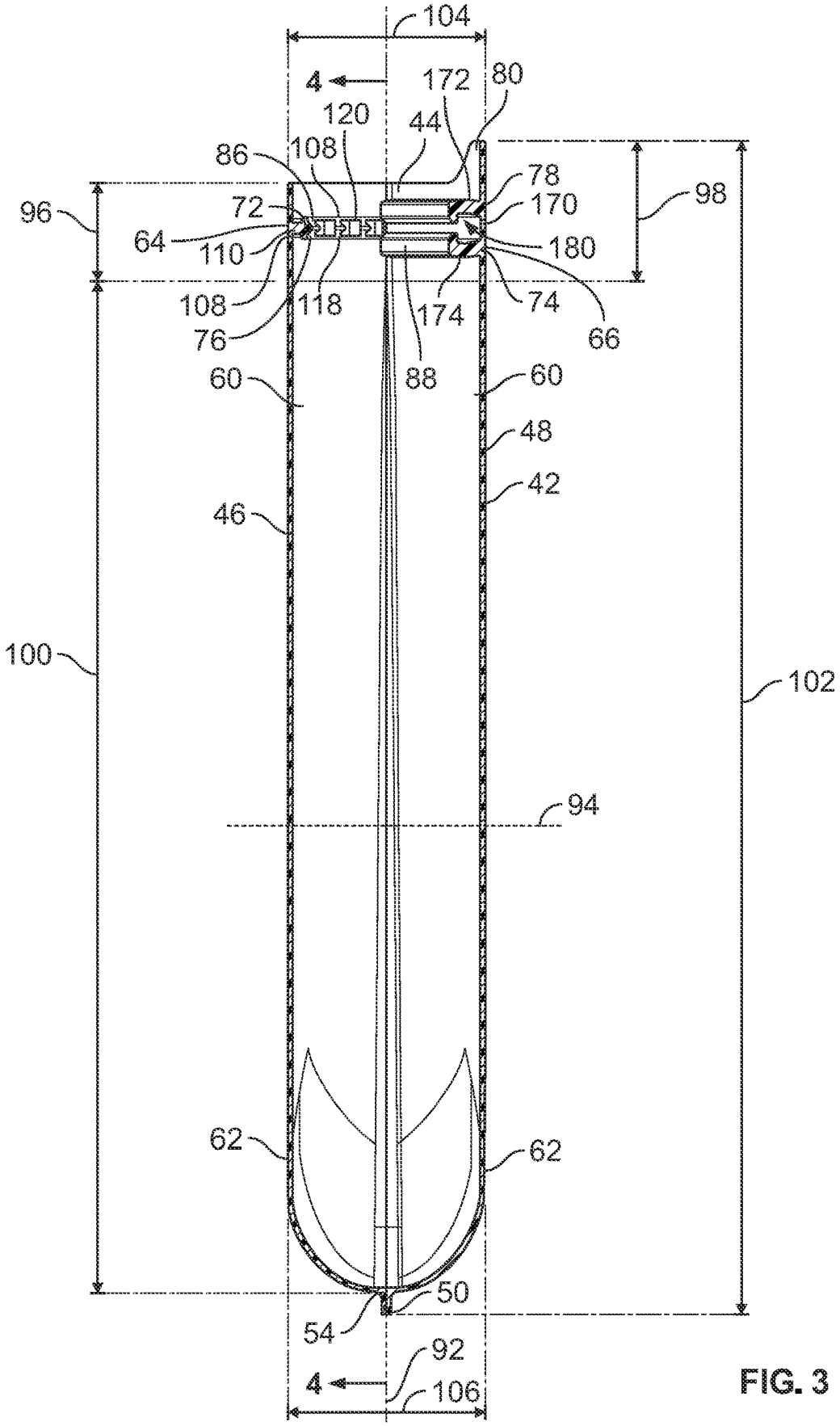
104
4
172
80
120
44
86
108
78
96
72
170
98
64
110
180
108
118
174
74
76
66
88
60
60
48
42
46
100
102
94
62
62
50
54
92
4
106

FIG. 3

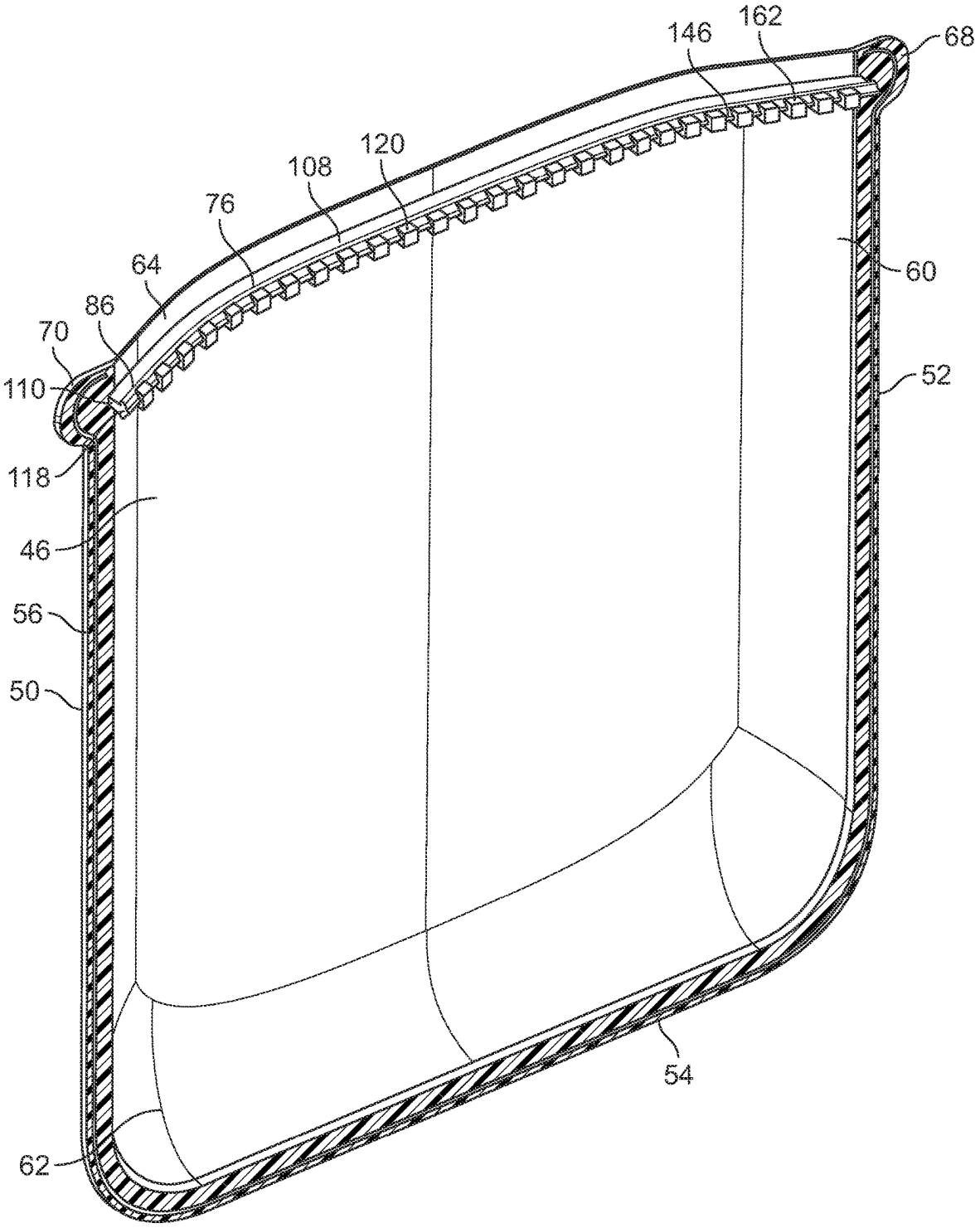

FIG. 4

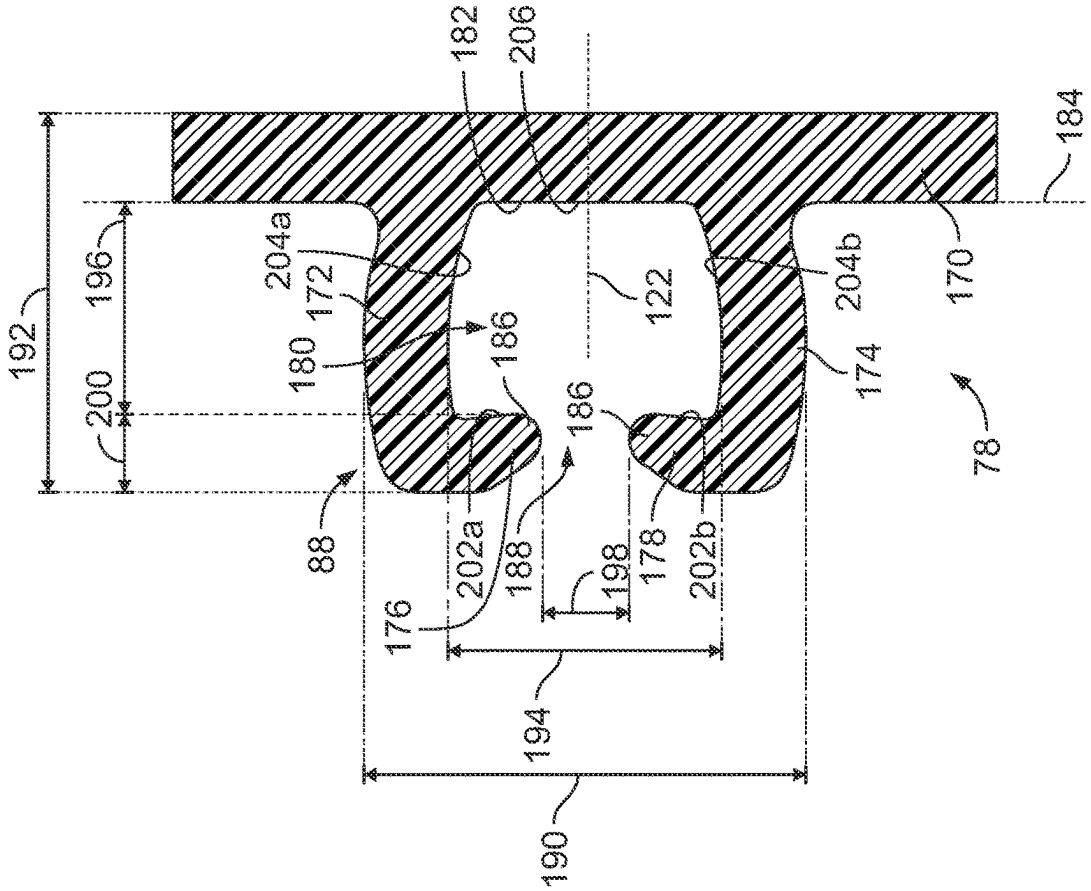
182
206
184
192
196
200
204a
172
180
186
122
204b
170
174
78
88
202a
188
198
178
202b
176
194
190

FIG. 5B

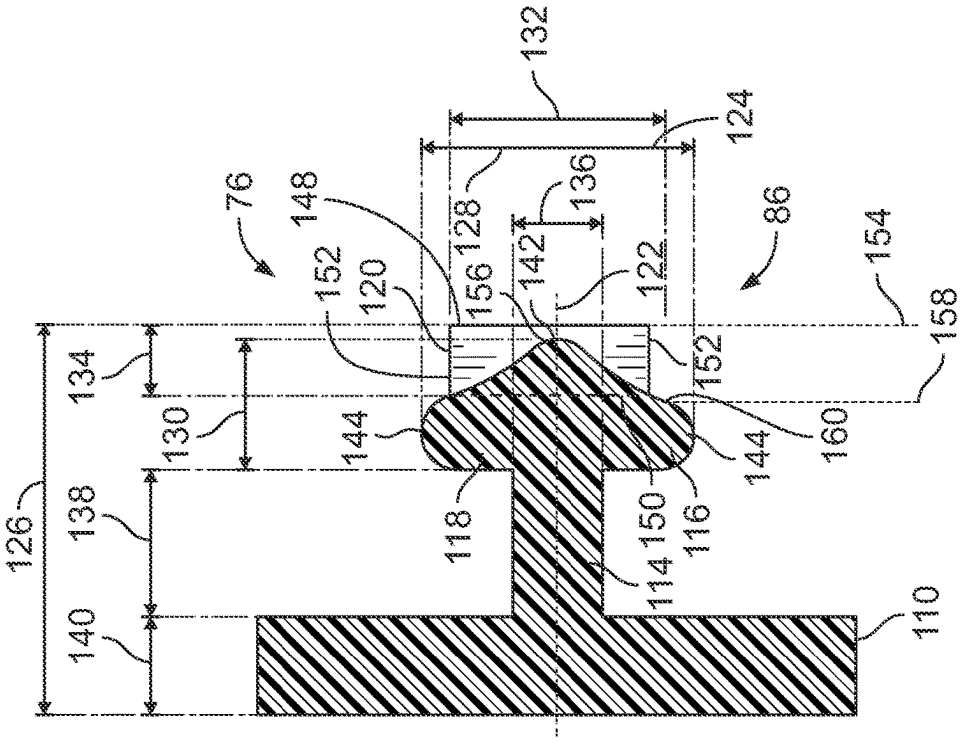
132
124
76
148
128
136
86
154
152
120
156
142
122
158
134
130
144
160
126
138
118
150
116
114
140
110

FIG. 5A

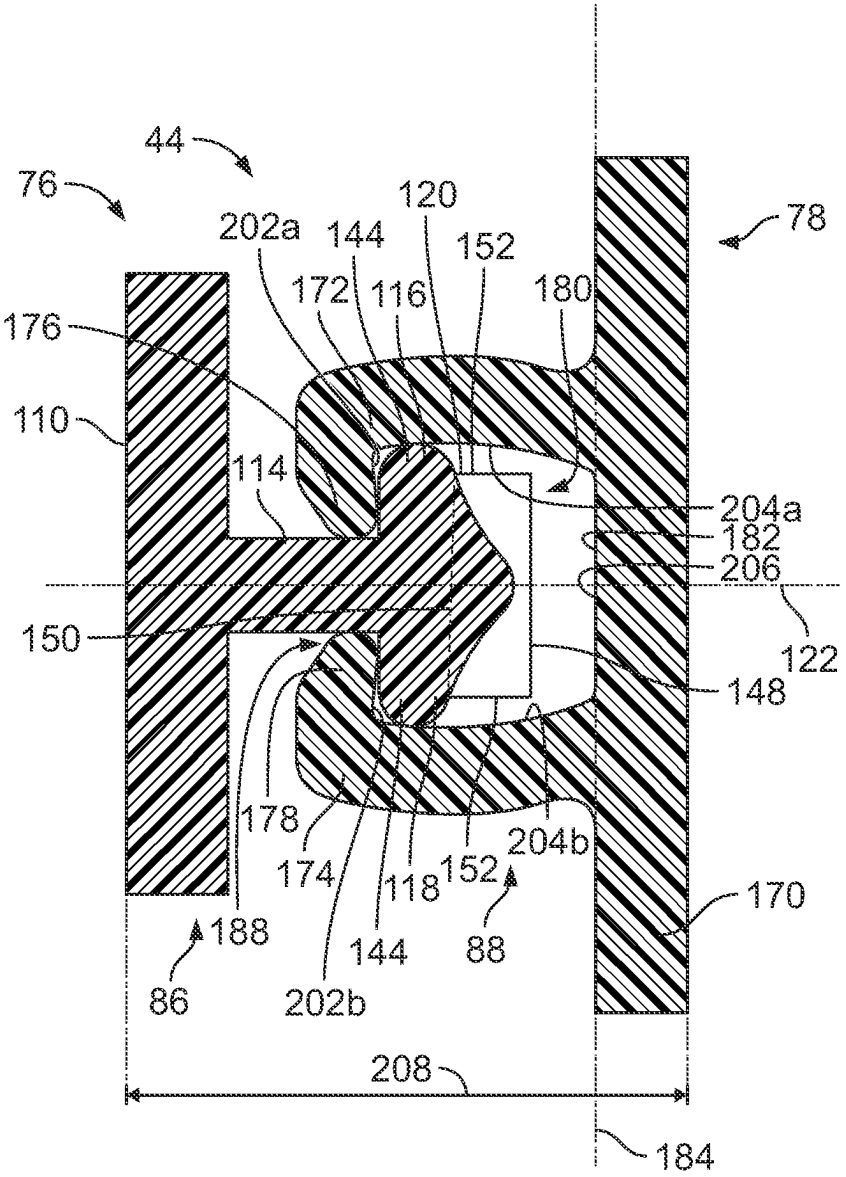
44
76
78
120
202a
144
152
172
116
180
176
110
114
204a
182
206
122
150
148
178
174
118
152
204b
170
188
144
88
86
202b
208
184

FIG. 5C

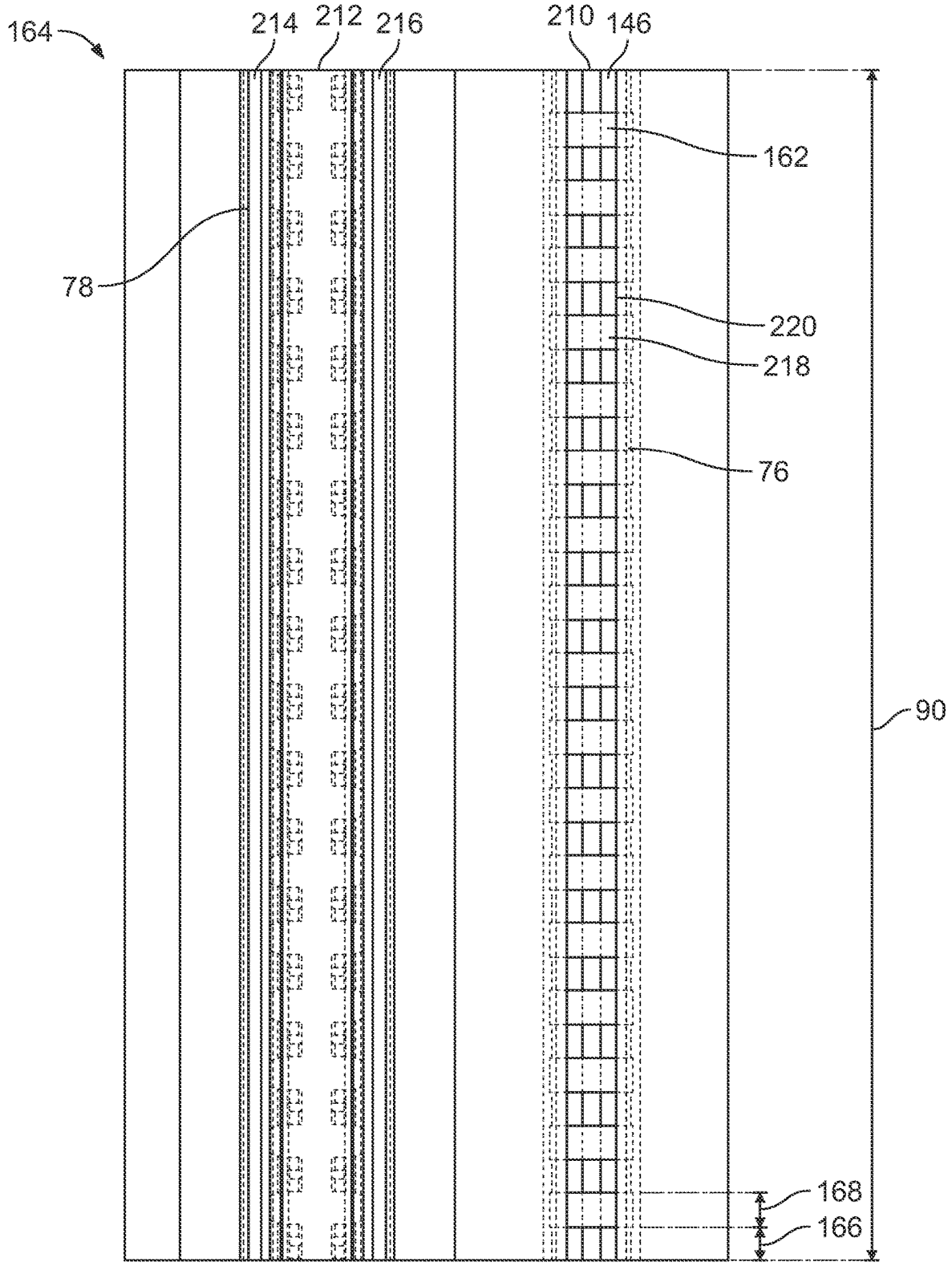

FIG. 5D

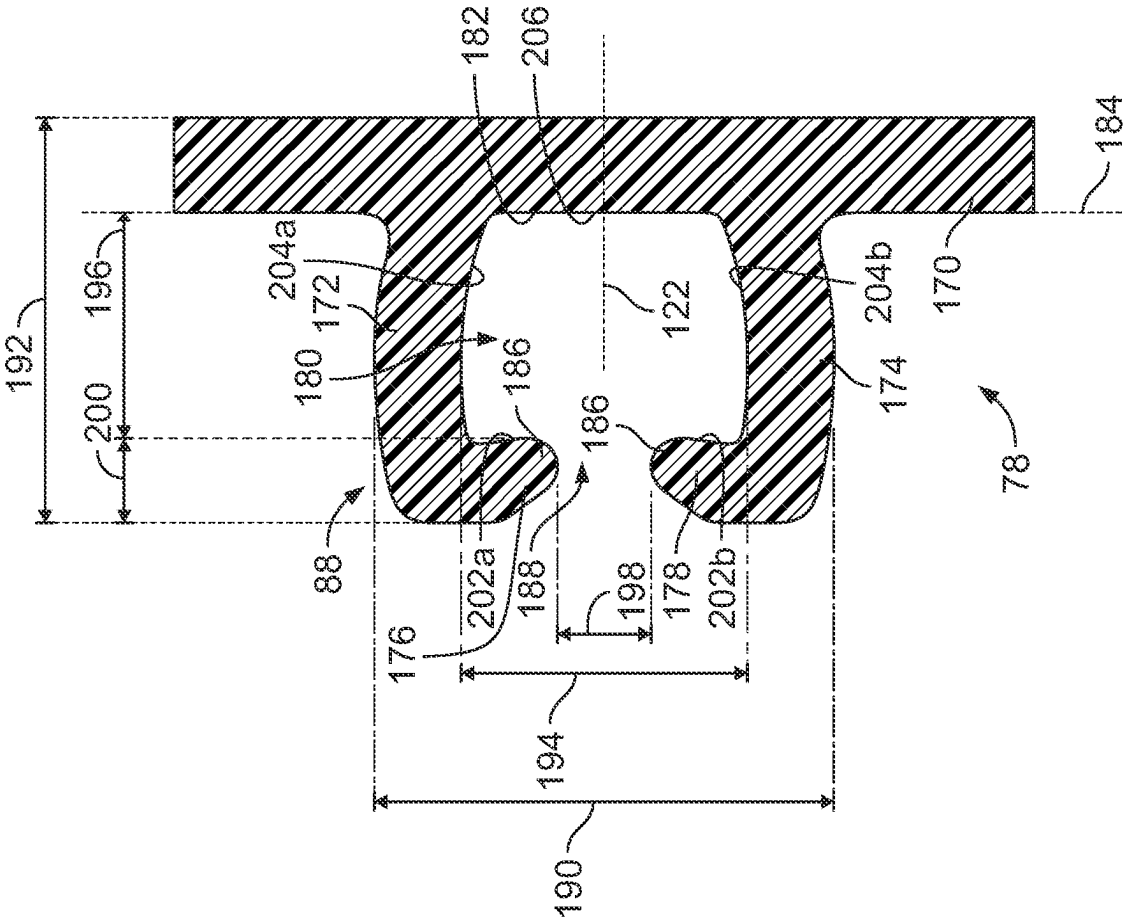
182
206
184
192
196
200
204a
172
180
186
122
204b
170
174
78
88
202a
188
198
178
202b
176
194
190

FIG. 6B

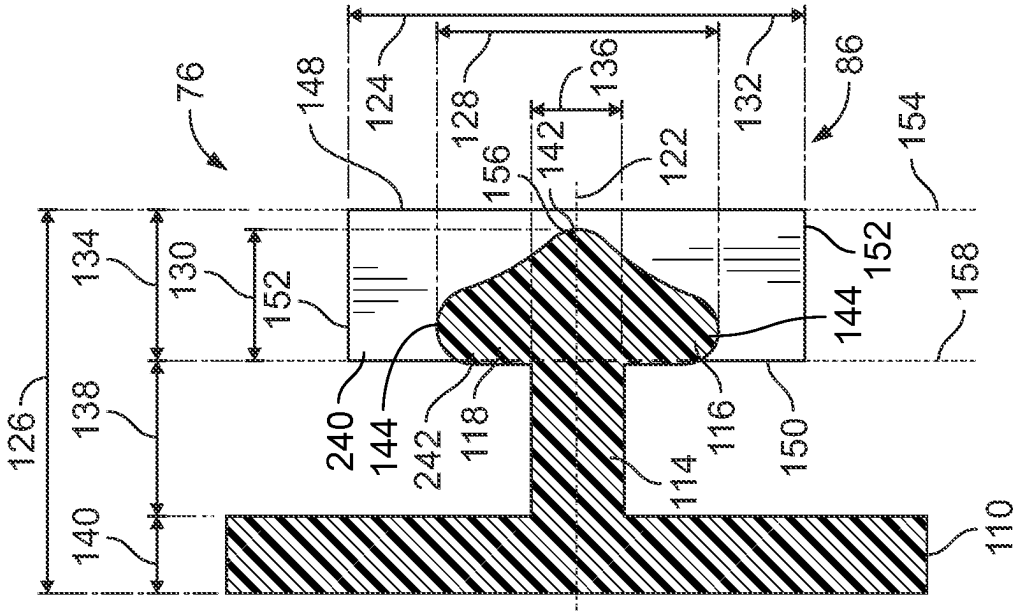
76
148
124
128
136
132
86
154
156
142
122
134
130
152
158
144
126
138
240
242
118
116
150
114
140
110

FIG. 6A

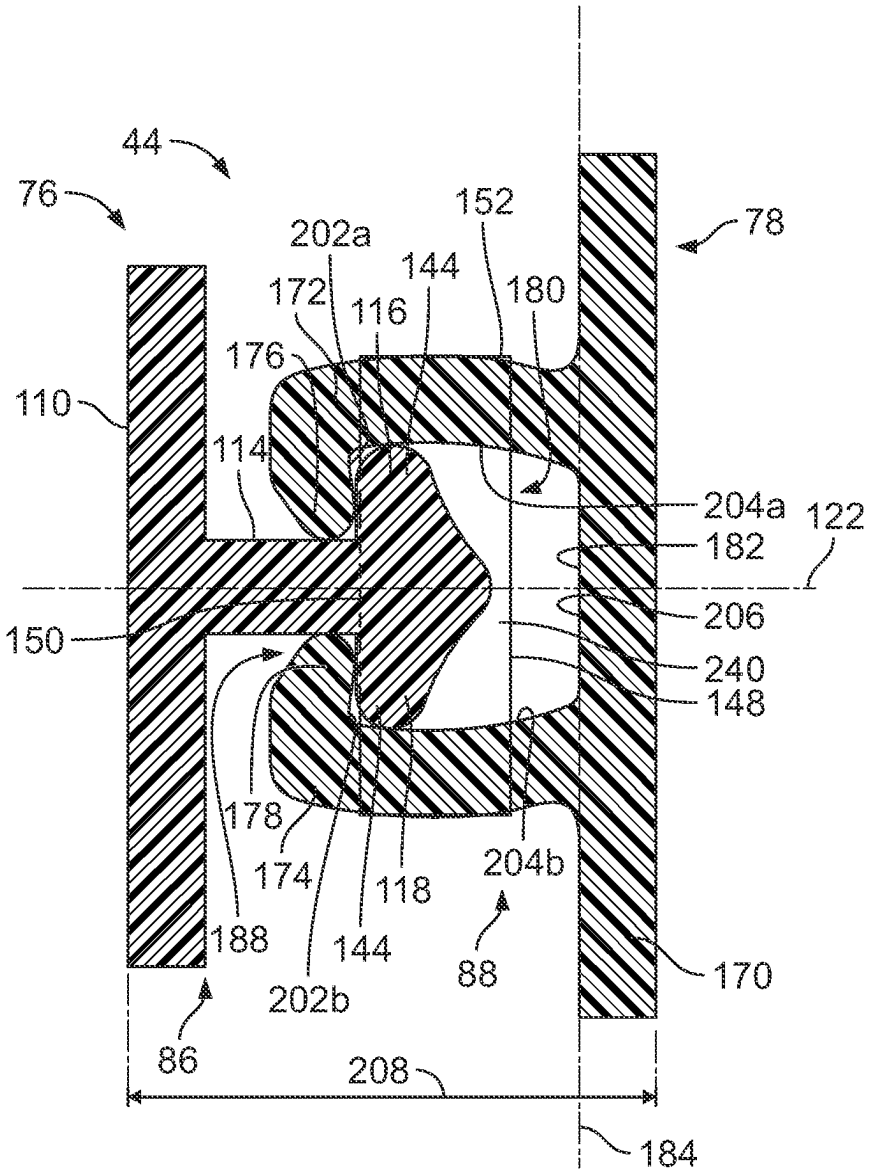
44
76
78
152
202a
144
172
116
180
176
110
114
204a
122
182
206
150
240
148
178
174
118
204b
188
144
88
170
202b
86
208
184

FIG. 6C

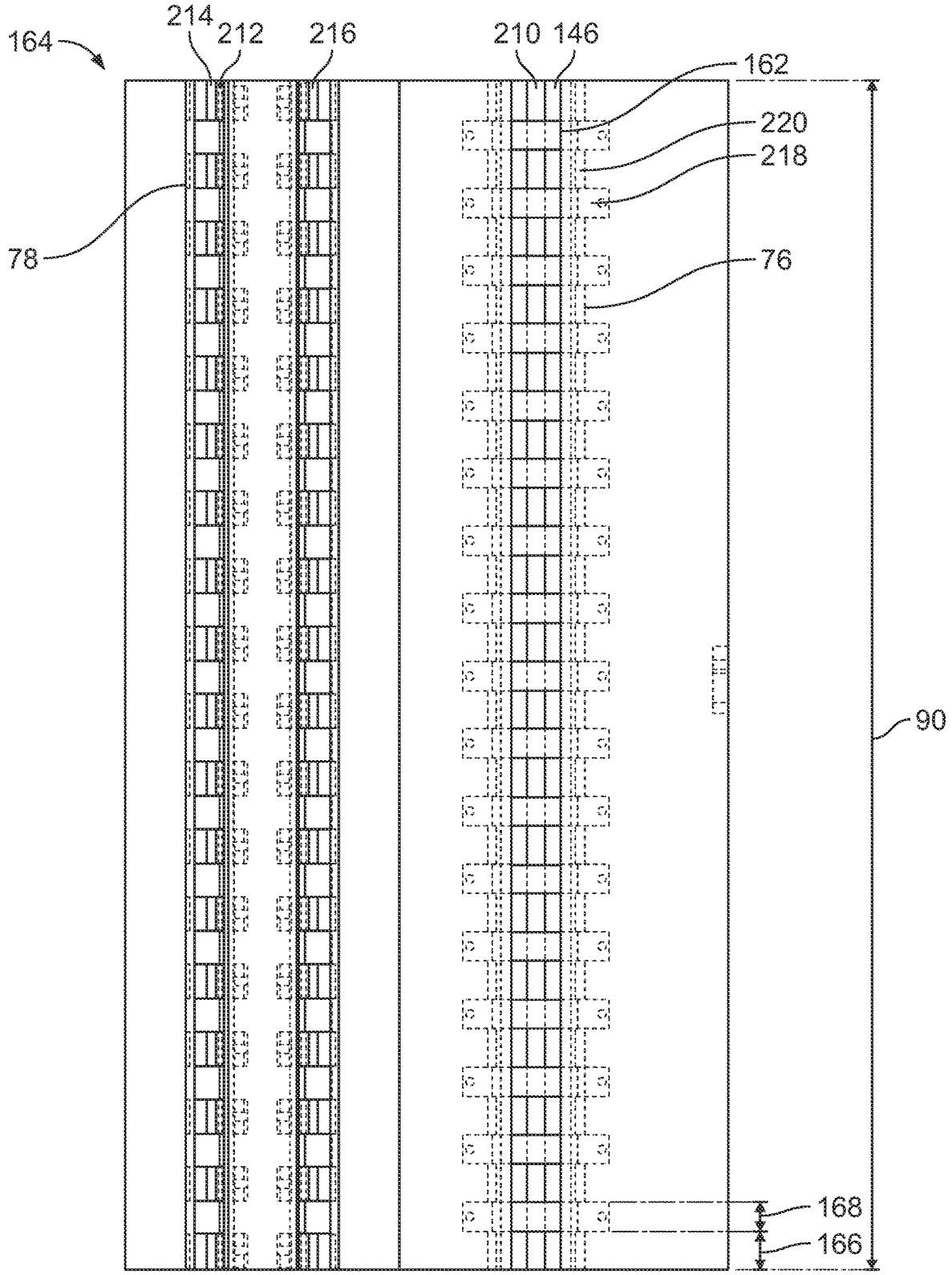

FIG. 6D

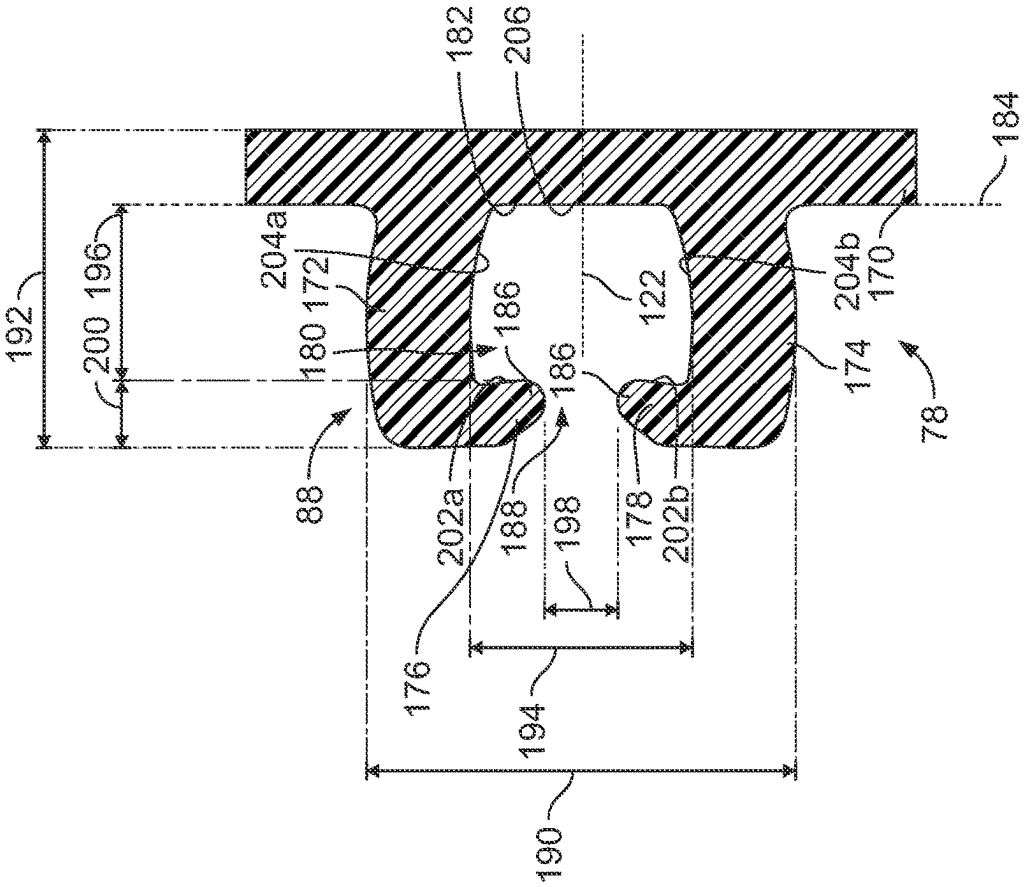
182
206
184
192
196
200
204a
172
180
186
122
204b
170
174
78
88
186
202a
188
198
178
202b
176
194
190

FIG. 7B

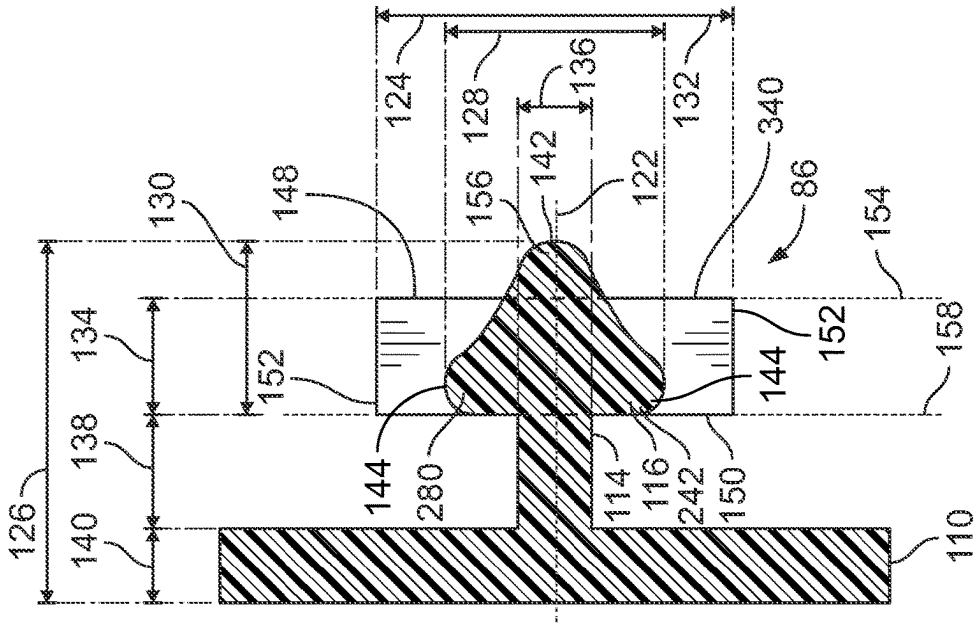
124
128
136
132
340
130
148
156
142
122
86
154
134
152
152
158
144
138
144
280
114
116
242
150
126
140
110

FIG. 7A

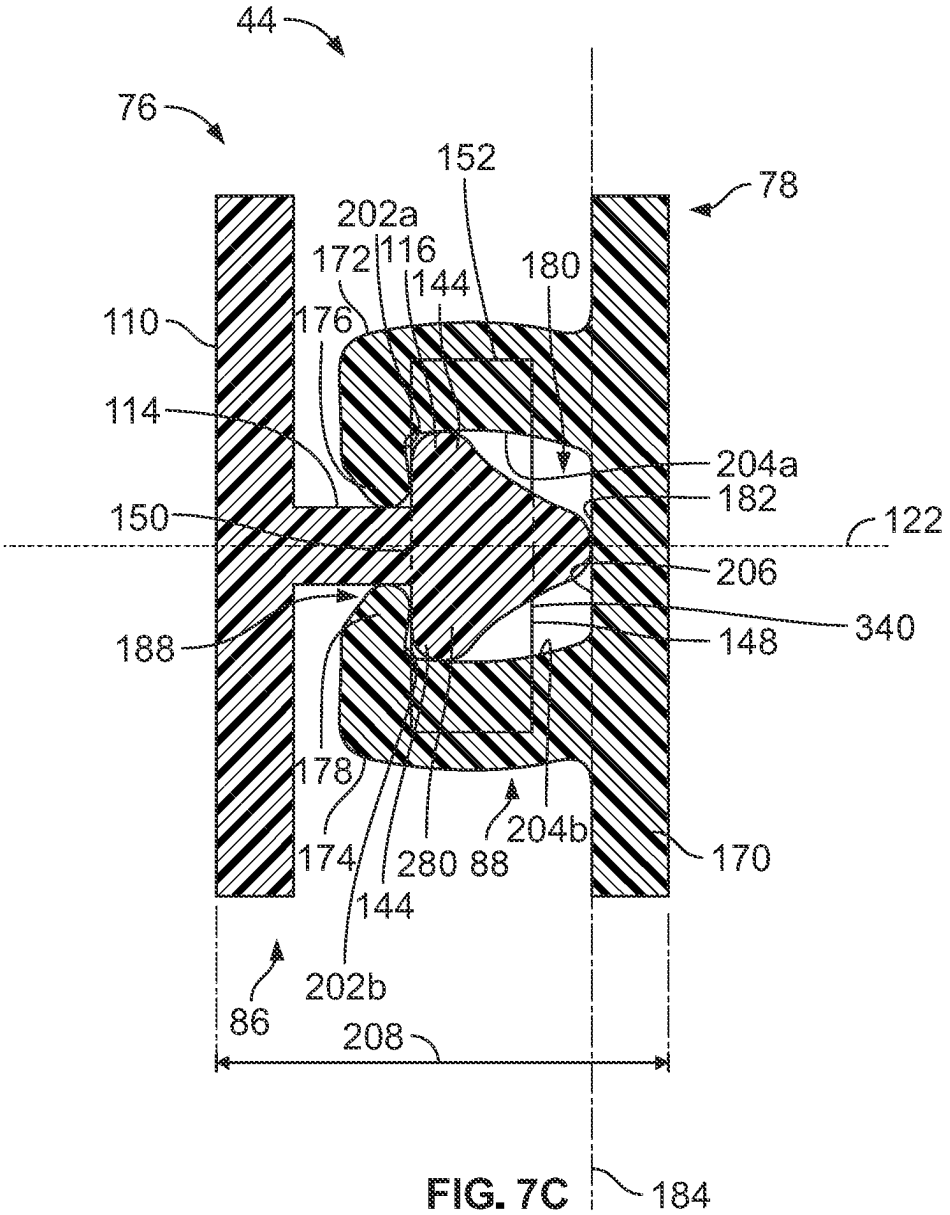
44
76
78
152
202a
172
116
144
180
110
176
114
204a
182
150
122
206
340
188
148
178
204b
174
280
88
170
144
202b
86
208
184

FIG. 7C

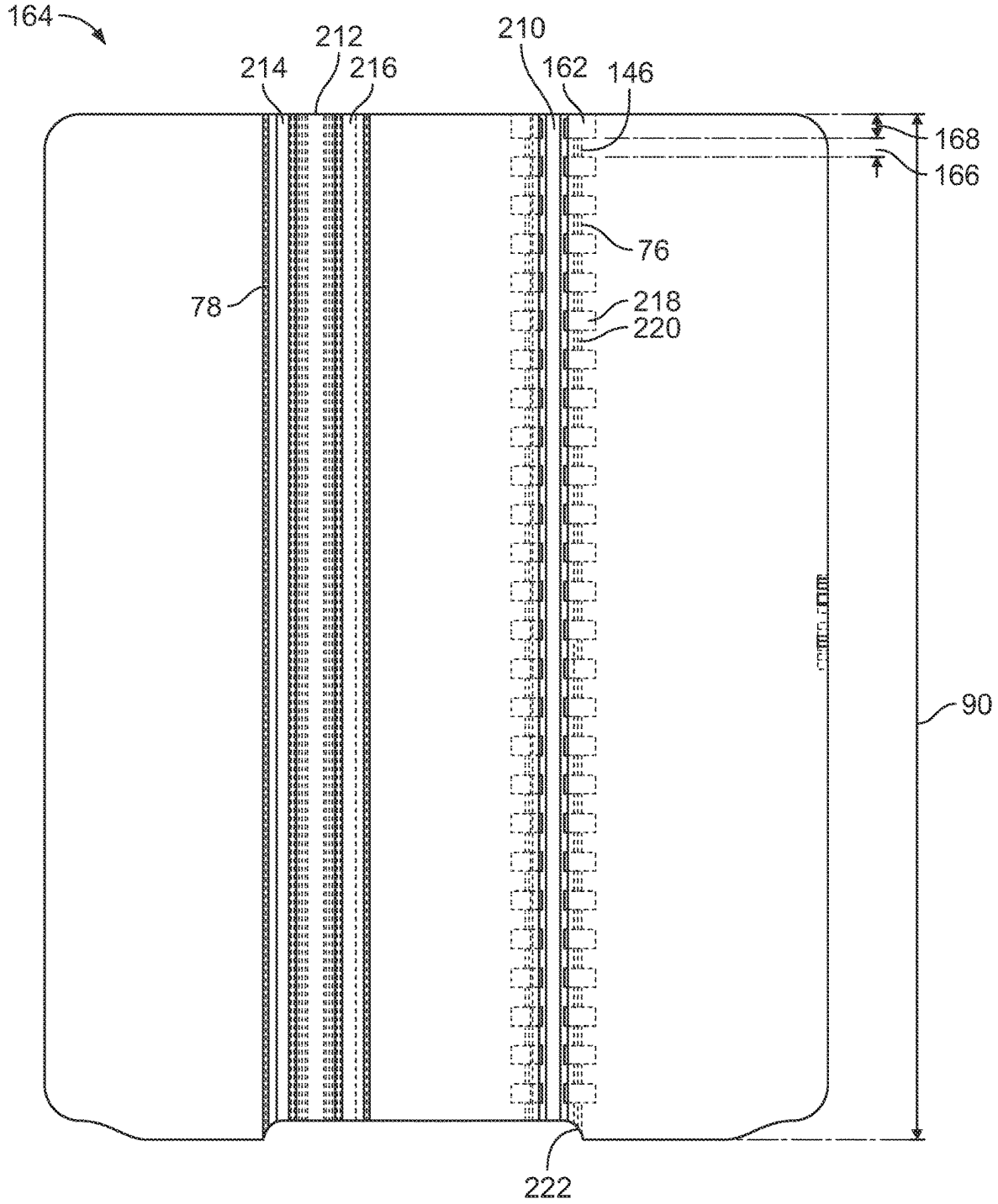

FIG. 7D

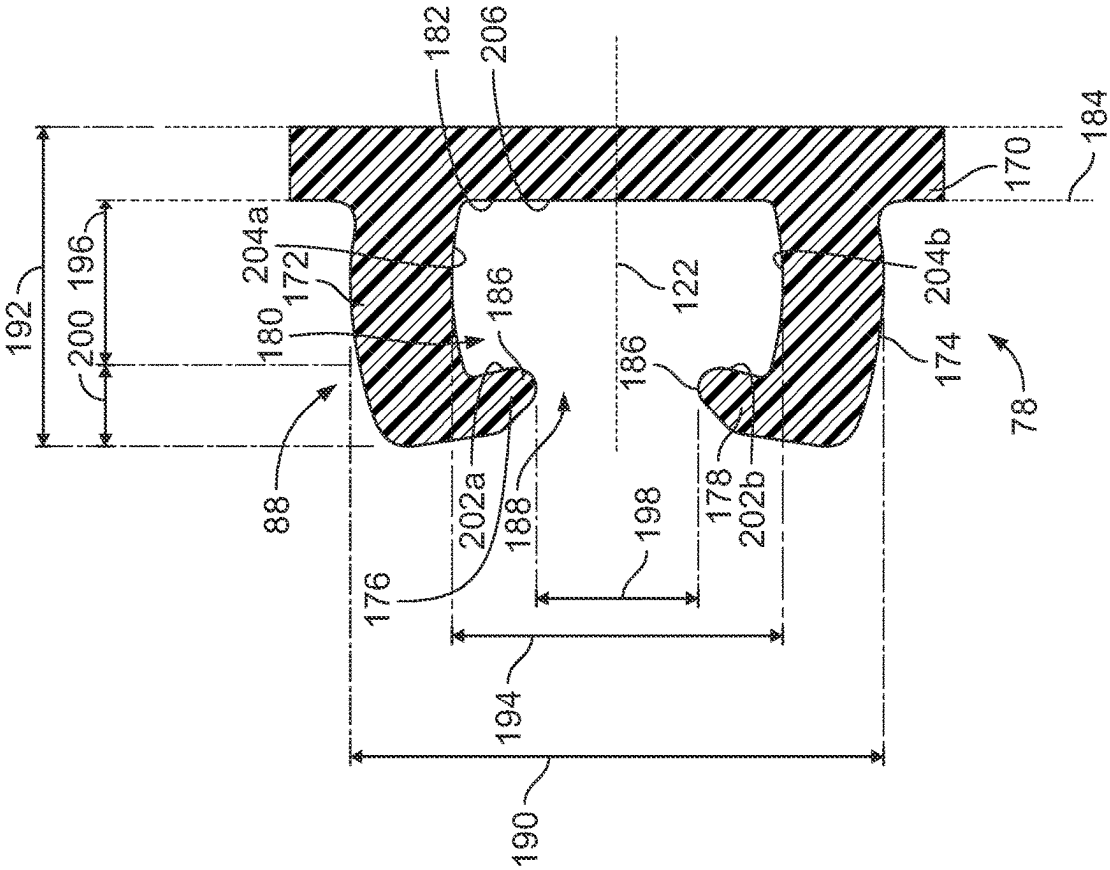
182
206
184
170
192
196
200
204a
172
180
186
122
204b
174
78
88
202a
188
198
178
202b
176
194
190

FIG. 8B

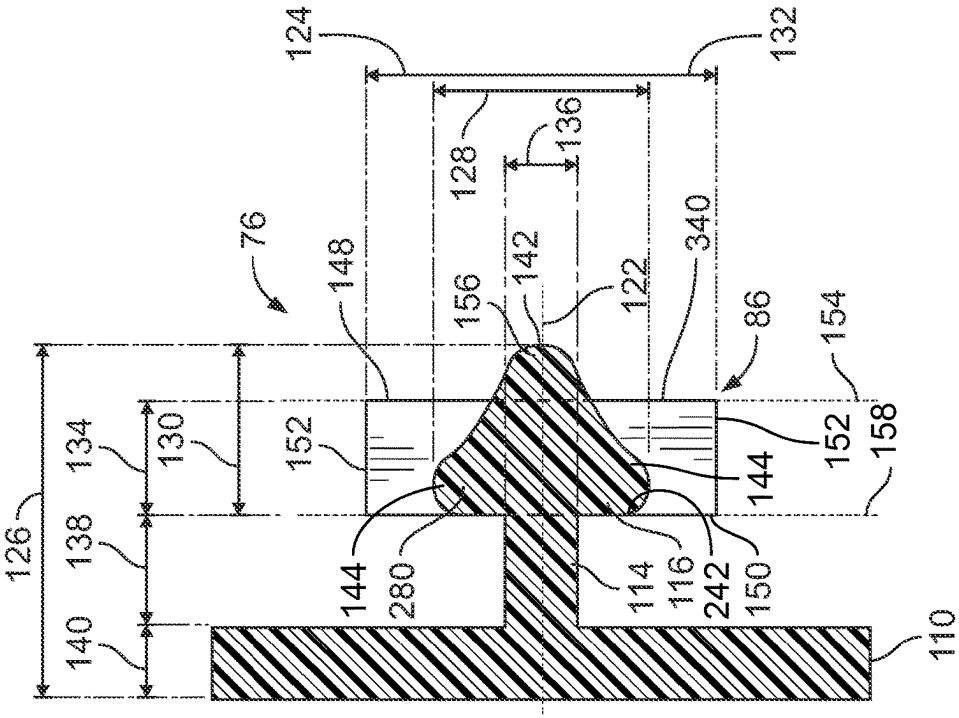
124
132
128
136
76
148
156
142
122
340
86
154
152
158
144
126
134
130
138
140
280
114
116
242
150
110

FIG. 8A

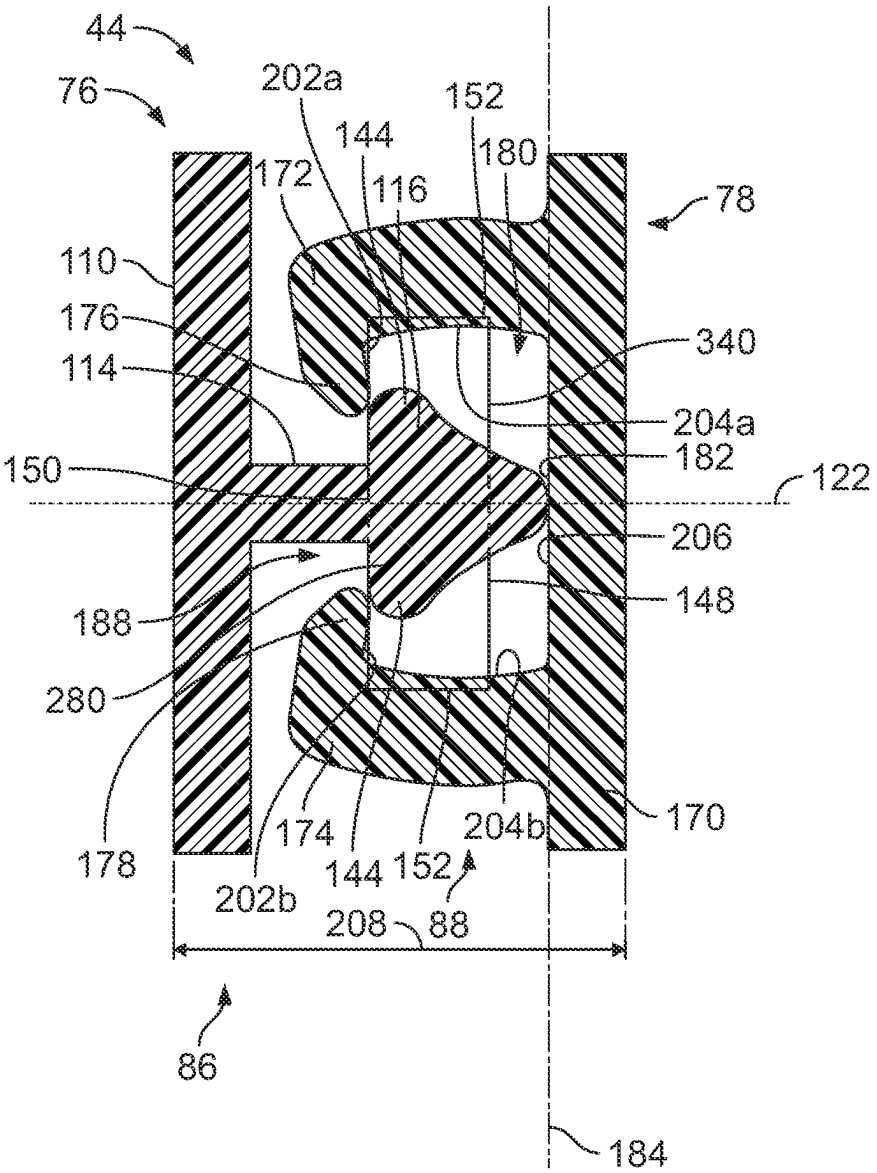
44
76
202a
152
144
180
172
116
78
110
176
340
114
204a
182
150
122
206
148
188
280
178
174
144
152
204b
170
202b
208
88
86
184

FIG. 8C

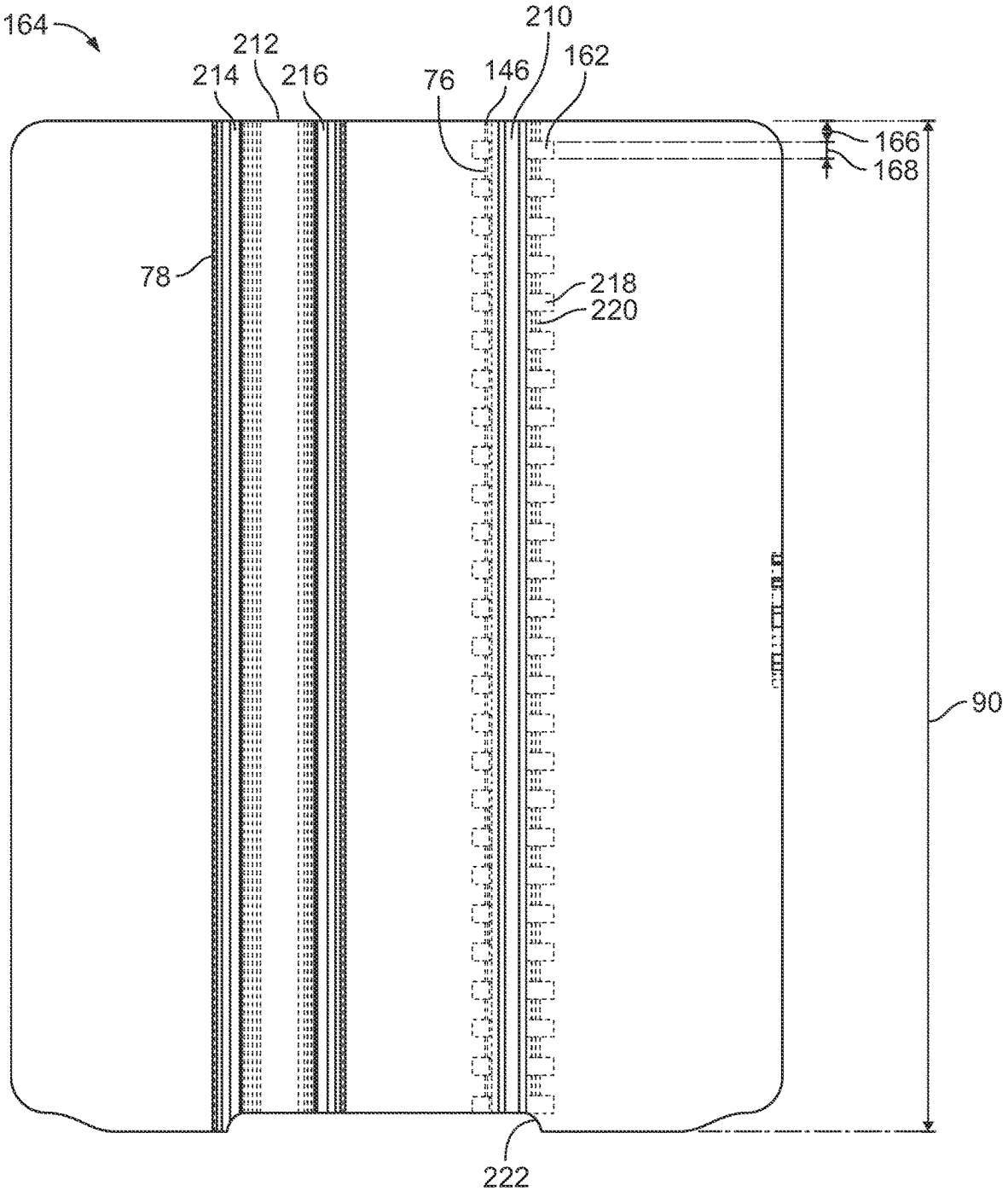

FIG. 8D

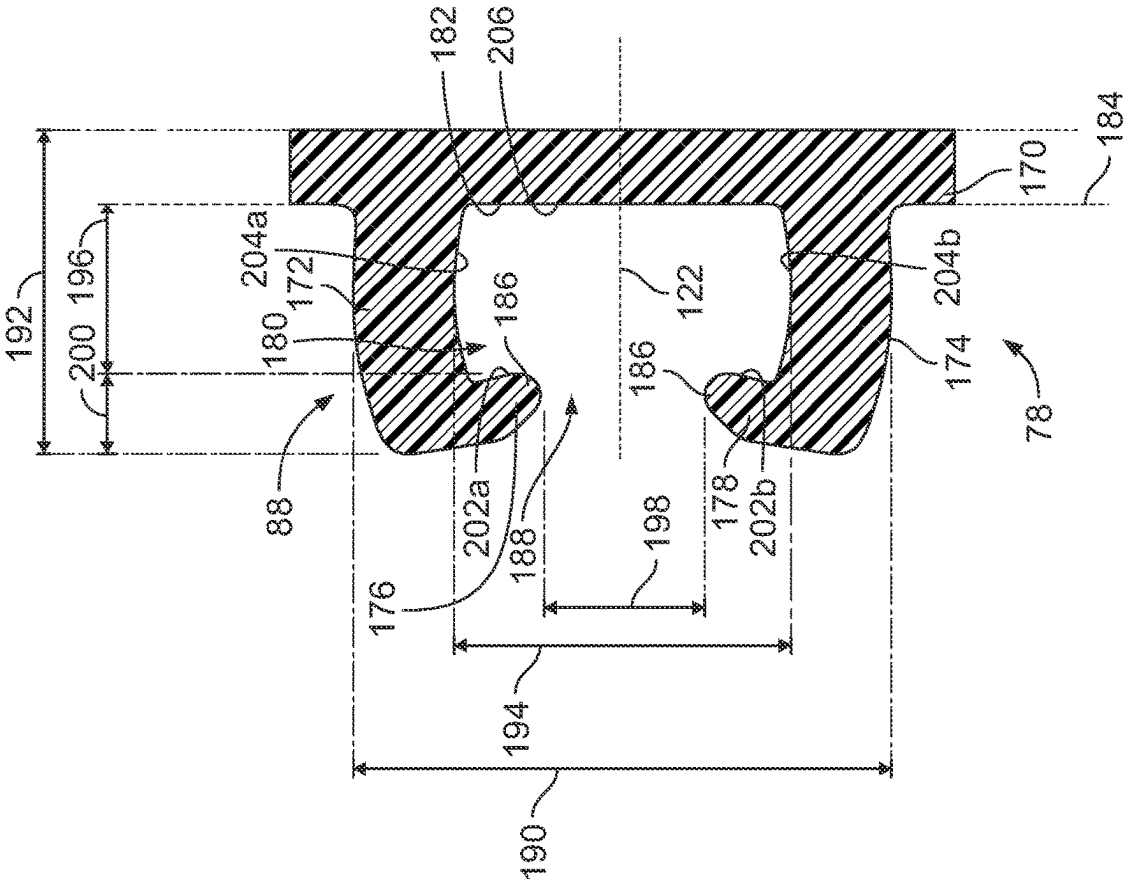
182
206
184
170
192
196
200
204a
172
180
186
122
204b
174
186
78
88
202a
188
198
178
202b
176
194
190

FIG. 9B

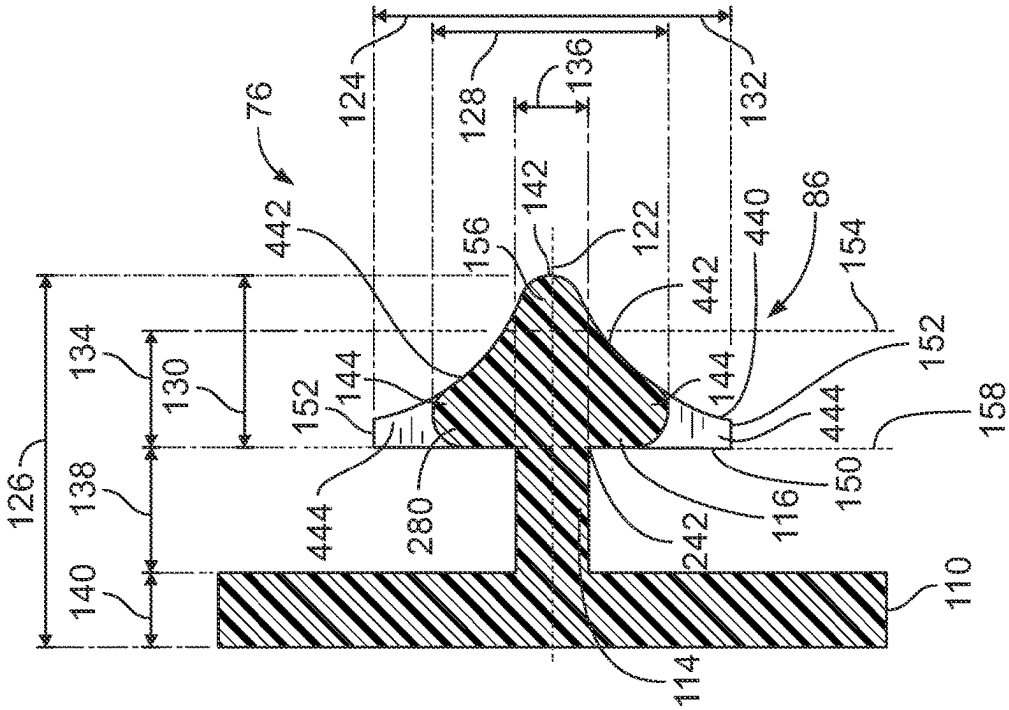
76
124
128
136
132
442
156
142
122
440
86
154
442
152
134
130
144
152
144
444
158
126
138
444
280
242
116
150
140
110
114

FIG. 9A

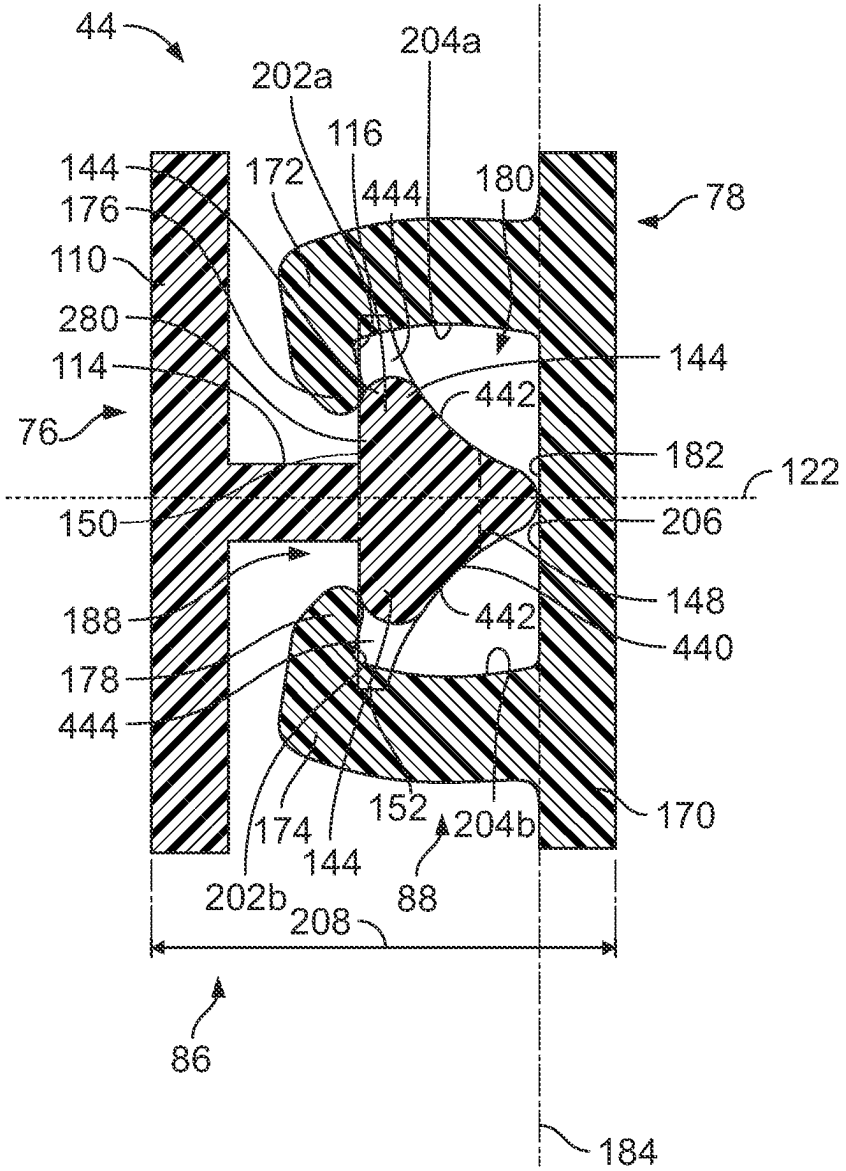
44
204a
202a
116
144
172
444
180
78
176
110
280
144
114
442
76
182
122
150
206
148
188
442
440
178
444
170
174
152
204b
144
202b
88
208
86
184

FIG. 9C

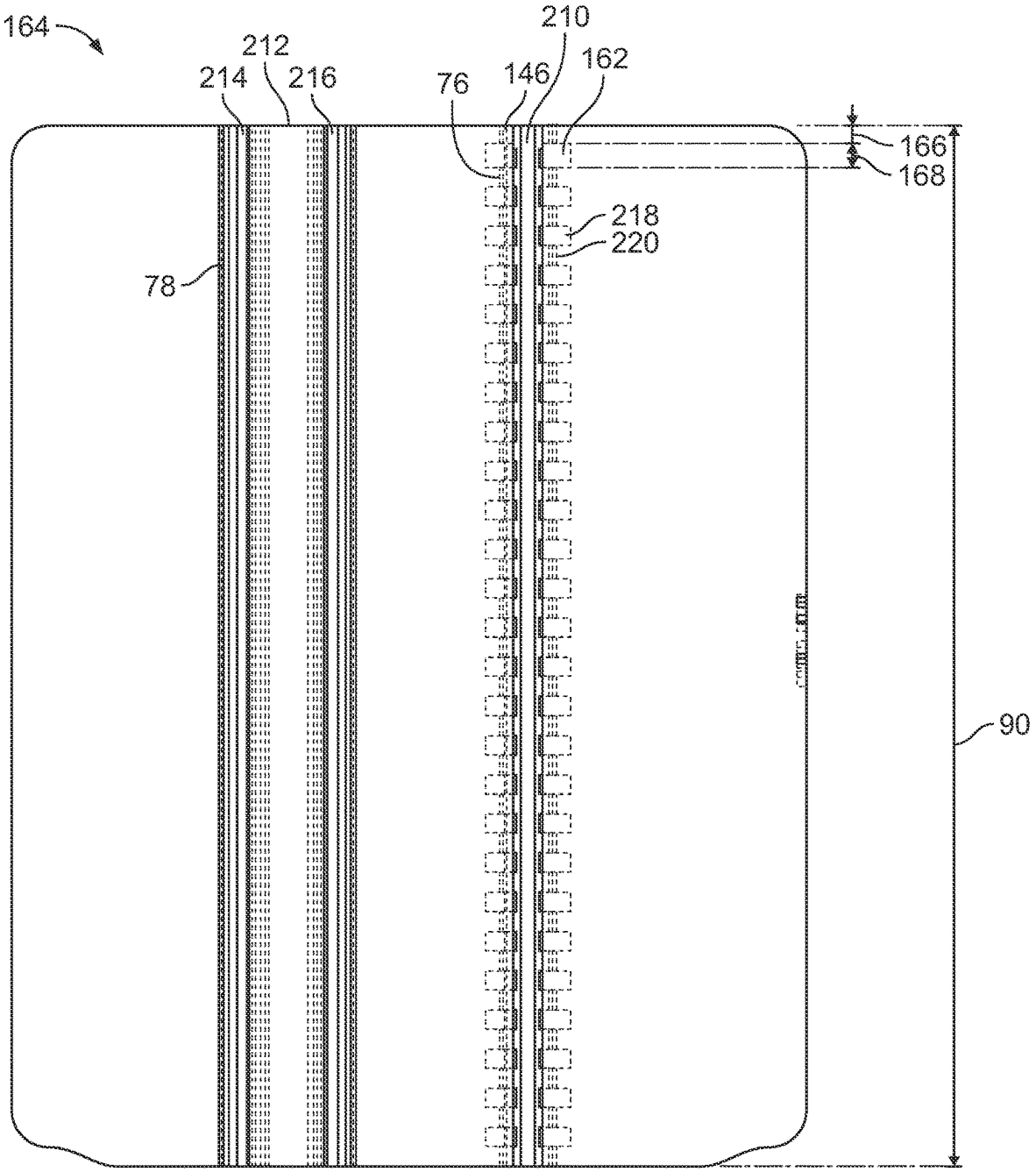

FIG. 9D

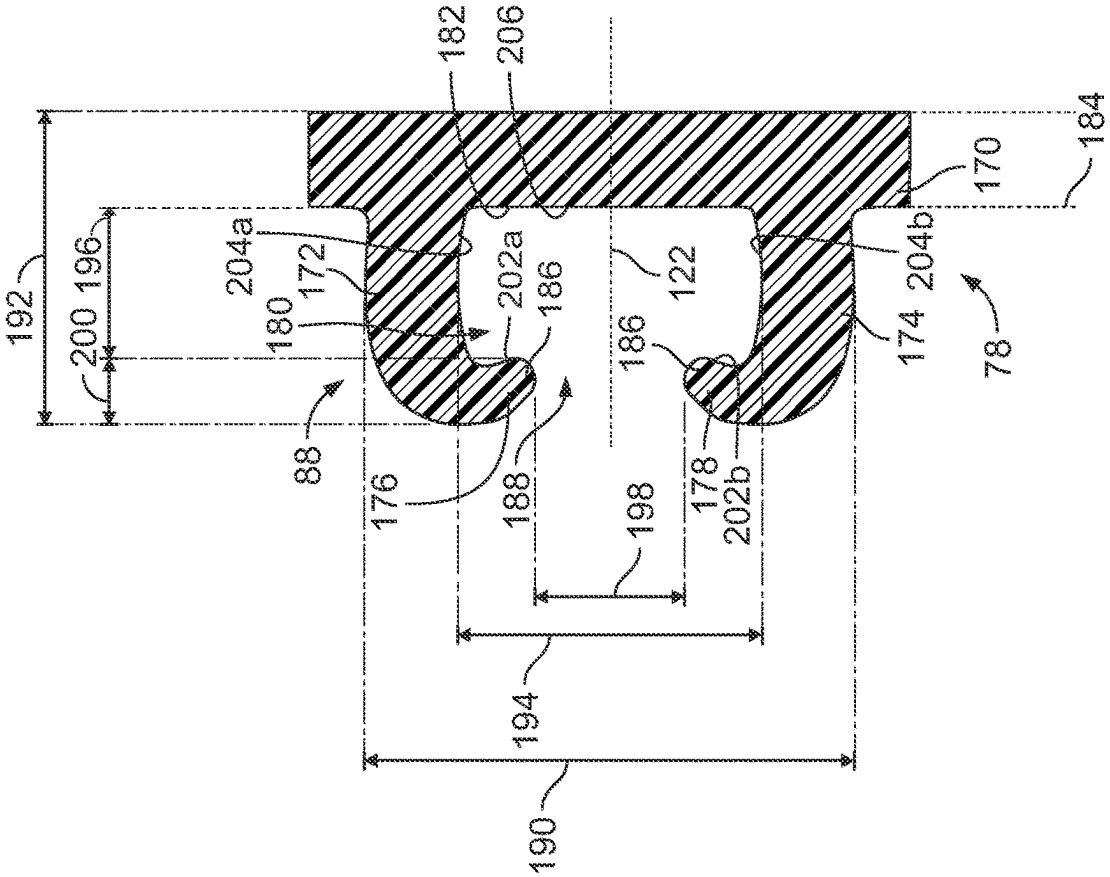

FIG. 10B

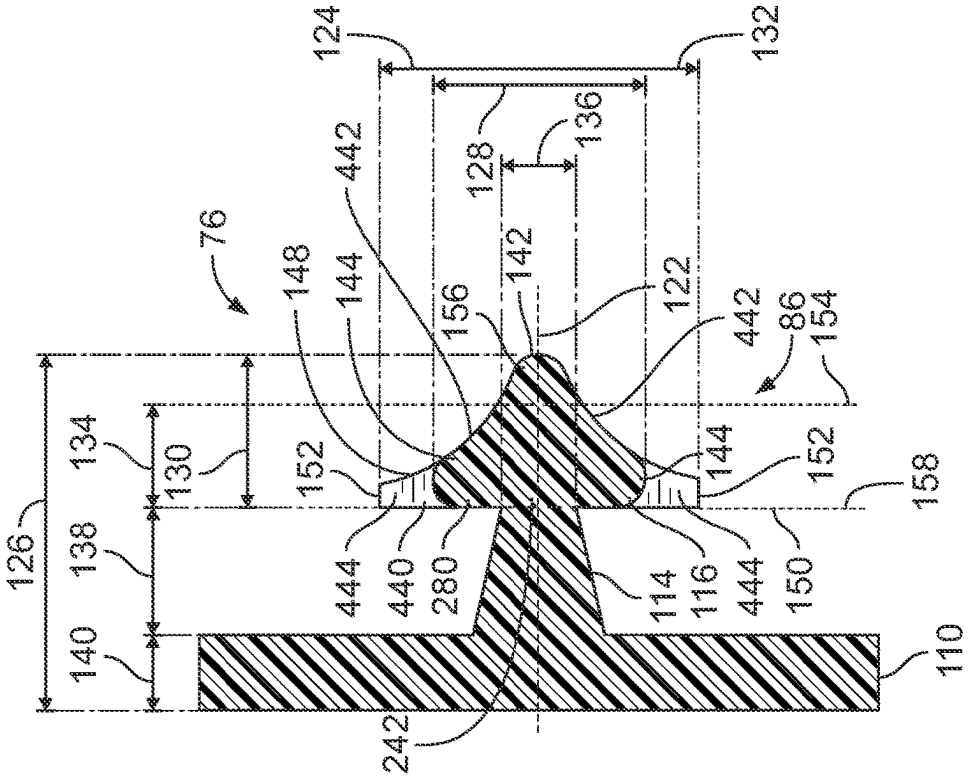

FIG. 10A

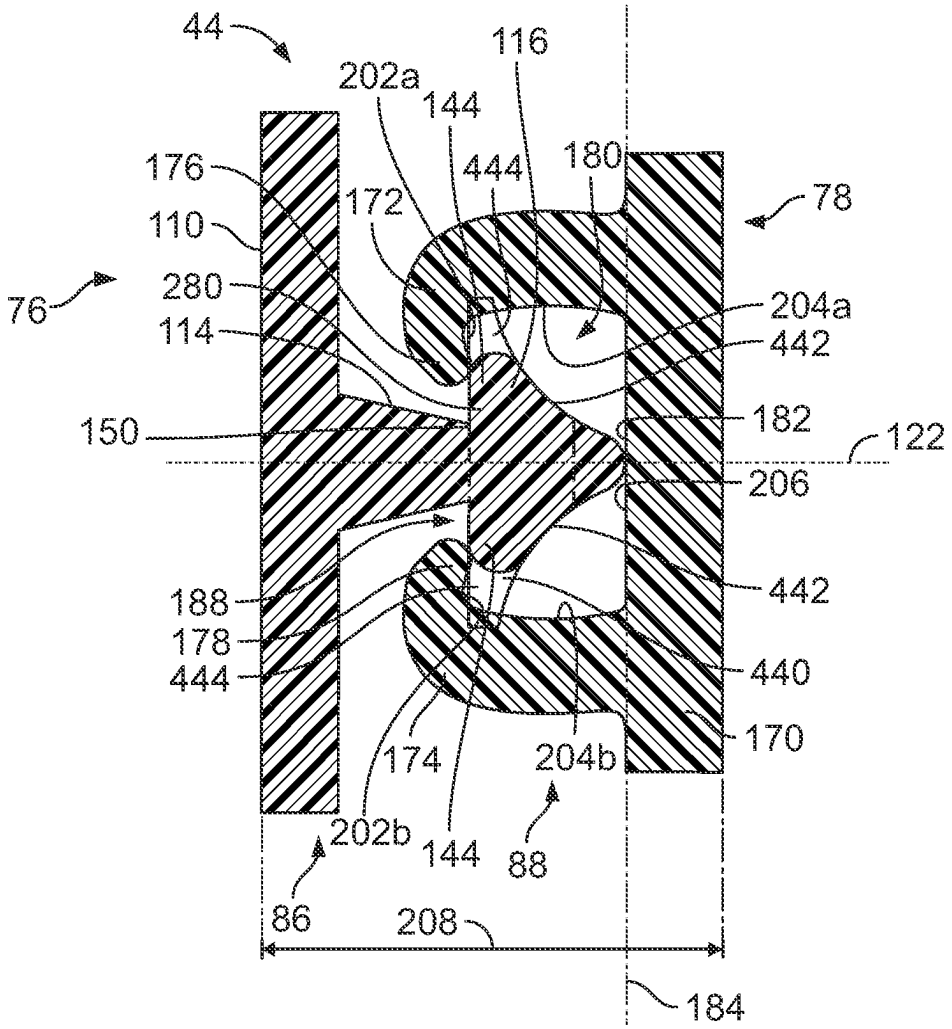
44
116
202a
144
176
444
180
78
172
110
76
280
204a
114
442
150
182
122
206
442
188
178
440
444
170
174
204b
202b
144
88
86
208
184

FIG. 10C

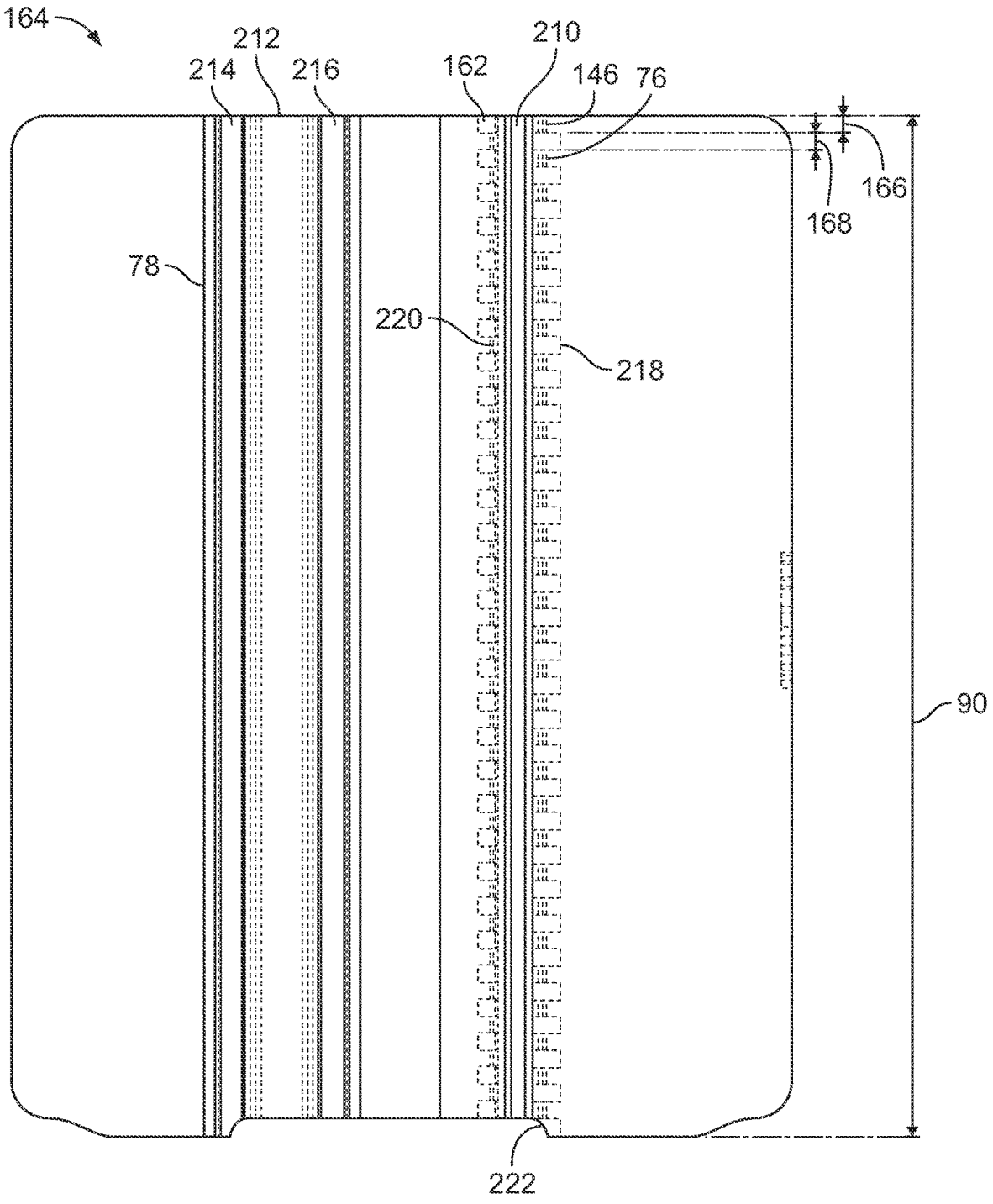

FIG. 10D

CLOSURE SYSTEM FOR POUCH OR CONTAINER

BACKGROUND OF THE DISCLOSURE

1. Field of the Disclosure

The present disclosure generally relates to pouches or containers comprising an improved closure system, and more particularly to closure systems that create a desirable sound for the user during closure.

2. Description of the Background of the Disclosure

Historically, re-closeable pouches and containers (collectively "bags") that are used in food packaging comprise a folded web of elastomeric material, or a web formed of blown, cast, monolayer, or co-extruded films, and have two side walls that are folded at the bottom and sealed at the sides. The bags typically have a re-closable fastener or closure system at a top of the bag, such as, for example, an adhesive, a wire tie, or a plastic zipper. While thermoplastic bags have a variety of benefits, including reduced cost and ease of manufacture, efficient packaging and transport, and desirable sealing capabilities for end use, such bags are typically not re-usable, and given consumer trends related to re-usable packaging, new and improved food packaging bags are desired that maintain the benefits associated with prior art bags. It is therefore desirable to maintain or enhance the benefits of prior art bags through the use of materials that provide for repeated use, i.e., by using one or more sustainable materials.

Sealable bags that are also re-usable are known in the art. For example, elastomeric pouches having re-sealable closure mechanisms applied longitudinally across a mouth thereof that allow repeated opening and closing of the pouch are known in the art. While elastomeric bags are becoming more desirable because of consumer demand for re-usable bags, these types of bags have different physical properties than existing thermoplastic bags, which requires different sealing mechanisms and considerations.

While the technology associated with the sealing mechanisms of existing thermoplastic bags has been developed over at least the last 70 years, the technology for sealing thermoplastic bags is not directly transferable to the requirements of elastomeric bags. This is especially so since some elastomeric bags may be used during cooking and may be exposed to extremes in temperature, pressure, and/or otherwise required to deal with various forces on the bag walls not typically contemplated with thermoplastic bags.

While improvements have been made to prior art sealing systems to provide for enhanced seals, such seals generally involve complicated structures, which can lead to increased complexity when manufacturing and using such sealing systems. Such sealing structures can include multiple pairs of opposing, interlocking closure profiles, which can be difficult to seal and/or can cause a user consternation in not knowing whether the multiple pairs of interlocking closure profiles have been properly sealed. These types of seals used with thermoplastic bags are not practical or directly transferrable to seals for elastomeric, re-usable bags. It is therefore desirable to provide a re-closable closure mechanism for an elastomeric pouch that includes a simpler sealing structure that is capable of providing an air-tight or water-tight seal, and that can be used in more rigorous applications.

Further, prior art bags that are formed with elastomeric materials typically do not include additional structure that provide enhanced auditory/tactile feedback when opening/closing the bag. In particular, deficiencies remain in that a user cannot be sure that the zipper is properly closed to seal the bag. While some prior art containers do include sealing structures that provide enhanced sealing qualities, such designs do not provide for an easily identifiable auditory/tactile cue to a user that the bag has been opened or closed. For example, although the zipper may produce an audible sound, the sound may not be easily heard or recognized as closing the bag by the user.

Therefore, a need exists for re-usable pouches or containers that alleviate one or more of the problems associated with, or particular to, existing containers and pouches.

SUMMARY OF THE DISCLOSURE

The present disclosure provides for an enhanced closure system made entirely from an elastomer that includes a sealing structure that provides unique auditory/tactile feedback to a user during opening or closing a container or pouch. In some embodiments, a container or pouch made entirely from an elastomer includes a body that comprises a front wall and a rear wall that is connected to the front wall along a peripheral edge. The container or pouch further includes a closure system comprising a front side having a male closure profile that includes a male closure element and a rear side having a female closure profile. The female closure profile includes a female closure element and defines a cavity. A centerline extends through the cavity such that the female closure element is symmetrical about the centerline. The male closure element includes a head portion that has a continuous, primary profile and a non-continuous, secondary profile that extends from the primary profile. A height of the secondary profile measured in a direction that is perpendicular to the centerline is greater than a height of the primary profile measured in a direction that is perpendicular to the centerline.

According to some embodiments, a container or pouch made entirely from an elastomer includes a body that comprises a front wall and a rear wall that is connected to the front wall along a peripheral edge. The container or pouch further includes a closure system comprising a front side having a male closure profile that includes a male closure element and a rear side having a female closure profile. The female closure profile includes a female closure element and defines a cavity. A centerline extends through the cavity such that the female closure element is symmetrical about the centerline. The male closure element includes a head portion that has a continuous, primary profile and a non-continuous, secondary profile that extends from the primary profile. A height of the secondary profile measured in a direction that is perpendicular to the centerline is greater than a height of the cavity measured in a direction that is perpendicular to the centerline.

According to some embodiments, a container or pouch made entirely from an elastomer includes a body that comprises a front wall and a rear wall that is connected to the front wall along a peripheral edge. The container or pouch further includes a closure system comprising a front side having a male closure profile that includes a male closure element and a rear side having a female closure profile. The female closure profile includes a female closure element and defines a cavity and an opening. A longitudinal plane extends through the peripheral edge, and a centerline extends through the cavity such that the female closure element is symmetrical about the centerline. The male closure element includes a head portion that has a continu-

ous, primary profile that defines thin regions of the male closure element and a non-continuous, secondary profile that extends from the primary profile and defines oversized regions of the male closure element. A length of a single thin region of the male closure element measured in a direction parallel to the longitudinal plane is between 1% and 10% of a length of the male closure element measured in a direction parallel to the longitudinal plane, and a length of a single oversized region of the male closure element measured in a direction parallel to the longitudinal plane is between 1% and 10% of the length of the male closure element.

BRIEF DESCRIPTION OF THE DRAWINGS

FIG. **1** is an isometric view of a pouch having a closure system as disclosed herein, and shown in an open configuration;

FIG. **2** is a front elevational view of the pouch of FIG. **1**;

FIG. **3** is a side cross-sectional view of the pouch taken through line **3-3** of FIG. **2**;

FIG. **4** is a partial isometric cross-sectional view of the pouch taken through line **4-4** of FIG. **3**;

FIG. **5**A is a detail view of a male closure profile of the closure system of FIGS. **1-4**, according to some aspects of the present disclosure;

FIG. **5**B is a detail view of a female closure profile of the closure system of FIGS. **1-4**, according to some aspects of the present disclosure;

FIG. **5**C is a detail view of the male and female closure profiles of FIGS. **5**A and **5**B in a closed configuration;

FIG. **5**D is a top view of a mold used to manufacture the male and female closure profiles of FIGS. **5**A-**5**C;

FIG. **6**A is a detail view of another male closure profile of the closure system of FIGS. **1-4**, according to some aspects of the present disclosure;

FIG. **6**B is a detail view of another female closure profile of the closure system of FIGS. **1-4**, according to some aspects of the present disclosure;

FIG. **6**C is a detail view of the male and female closure profiles of FIGS. **6**A and **6**B in a closed configuration;

FIG. **6**D is a top view of a mold used to manufacture the male and female closure profiles of FIGS. **6**A-**6**C;

FIG. **7**A is a detail view of yet another male closure profile of the closure system of FIGS. **1-4**, according to some aspects of the present disclosure;

FIG. **7**B is a detail view of yet another female closure profile of the closure system of FIGS. **1-4**, according to some aspects of the present disclosure;

FIG. **7**C is a detail view of the male and female closure profiles of FIGS. **7**A and **7**B in a closed configuration;

FIG. **7**D is a top view of a mold used to manufacture the male and female closure profiles of FIGS. **7**A-**7**C;

FIG. **8**A is a detail view of still another male closure profile of the closure system of FIGS. **1-4**, according to some aspects of the present disclosure;

FIG. **8**B is a detail view of still another female closure profile of the closure system of FIGS. **1-4**, according to some aspects of the present disclosure;

FIG. **8**C is a detail view of the male and female closure profiles of FIGS. **8**A and **8**B in a closed configuration;

FIG. **8**D is a top view of a mold used to manufacture the male and female closure profiles of FIGS. **8**A-**8**C;

FIG. **9**A is a detail view of another male closure profile of the closure system of FIGS. **1-4**, according to some aspects of the present disclosure;

FIG. **9**B is a detail view of another female closure profile of the closure system of FIGS. **1-4**, according to some aspects of the present disclosure;

FIG. **9**C is a detail view of the male and female closure profiles of FIGS. **9**A and **9**B in a closed configuration;

FIG. **9**D is a top view of a mold used to manufacture the male and female closure profiles of FIGS. **9**A-**9**C;

FIG. **10**A is a detail view of yet another male closure profile of the closure system of FIGS. **1-4**, according to some aspects of the present disclosure;

FIG. **10**B is a detail view of yet another female closure profile of the closure system of FIGS. **1-4** according to some aspects of the present disclosure;

FIG. **10**C is a detail view of the male and female closure profiles of FIGS. **10**A and **10**B in a closed configuration; and

FIG. **10**D is a top view of a mold used to manufacture the male and female closure profiles of FIGS. **10**A-**10**C.

Other aspects and advantages of the present disclosure will become apparent upon consideration of the following detailed description, wherein similar structures have similar reference numerals.

DETAILED DESCRIPTION

The present disclosure is directed to pouches and containers comprising an improved closure system, and more particularly to closure systems that create a desirable sound for the user during closure. While the systems disclosed herein may be embodied in many different forms, several specific embodiments are discussed herein with the understanding that the embodiments described in the present disclosure are to be considered only exemplifications of the principles described herein, and the disclosure is not intended to be limited to the embodiments illustrated. Throughout the disclosure, the terms "about" and "approximate" mean plus or minus 5% of the number or value that each term precedes. As used herein, the phrase "elastomer" refers to a material which at room temperature can be stretched repeatedly and, upon immediate release of the stress, will return with force to its approximate original length. Further, the phrase "leak resistant seal" refers to a seal that resists leakage of liquids and solids from the container during storage and transport without the aid of an external structure to maintain the seal. Finally, the term "closure element" is defined herein to mean one part of a closure. For example, on a zipper closure, a closure element is one profile or the other of the zipper, e.g., a rib profile or a groove profile.

The present disclosure is related to storage pouches and containers that include improved zipper designs. The pouches and zipper designs may take varying forms, and representative examples are provided in FIGS. **1-10**D. While the embodiments disclosed herein are formed entirely by an elastomer, such as silicone, it is contemplated that multiple components may be coupled or formed together to achieve the embodiments disclosed herein. While varying manufacturing methods may be used, the pouches and containers disclosed herein may be manufactured using a Liquid Injection Mold Process (LIM process) through which the entire pouch or container is molded in one piece and is made of silicone. Alternative methods of manufacture may be implemented, such as compression molding, transfer molding, extrusion, blow molding, sheet extrusion, and thermal forming.

Closure elements of the present technology include a plurality of intermittent or alternating digitations of differing shape along one or both of the profiles, but preferably have

intermittent or alternating segments of two different profiles as in the embodiments illustrated herein. The segments of differing shape may be of equal or unequal length.

Referring now to FIGS. **1-4**, a re-closable pouch **40** is shown that includes a body **42** and a closure system **44**, as disclosed herein. The pouch **40** may be entirely made of one or more elastomeric materials, and may comprise one or more of an unsaturated rubber, a saturated rubber, or a thermoplastic elastomer (TPE), among other elastomeric materials. When the pouch **40** is molded as a unitary component, leak paths along edges of the pouch **40** are minimized or eliminated since no additional sealing is required along the various edges of the pouch **40**, in contrast to many prior art plastic zippered bags. By forming the pouch **40** as a unitary component, the structural integrity of the pouch **40** is enhanced. Since the entire pouch **40** is constructed of an elastomer, the pouch **40** is considered to be a long-life container.

Referring to FIGS. **1** and **2**, the body **42** is defined by a first or front wall **46** having a width and a second or rear wall **48**, which are joined together along a seam or peripheral edge **50** that extends along a first or left side **52**, a second or bottom side **54**, and a third or right side **56** of the body **42**. While the body **42** of the present embodiment is a unitary component, in some embodiments, the front wall **46** and the rear wall **48** may be connected by, for example, folding, heat sealing, and/or an adhesive, along the peripheral edge **50**. A receptacle **58** is defined between the front wall **46** and the rear wall **48** of the body **42**, which is configured for holding and retaining food or other material(s) that are placed into the receptacle **58** for storage therein. Referring to the cross-sectional view of FIG. **4** showing the pouch **40** in an open configuration, upper portions **60** of the front wall **46** and the rear wall **48** are generally straight, while lower portions **62** of the front wall **46** and the rear wall **48** are curved and join one another at the peripheral edge **50** along the bottom side **54** of the body **42**. However, in alternative embodiments, the upper portions **60** need not be straight, and the lower portions **62** need not be curved. It should be appreciated that due to the use of an elastomer to form the front wall **46** and the rear wall **48**, gravity will cause the walls **46**, **48** to deform or curve when the pouch **40** is placed on a resting surface (not shown).

Still referring to FIG. **1**, the re-closeable pouch **40** further includes the closure system **44**, which extends upwardly from the body **42**. The closure system **44** includes a first or front side **64**, a second or rear side **66**, a first or left tab **68**, and a second or right tab **70**. The front side **64** comprises a front sealing strip **72** that extends longitudinally across the pouch **40**, and the rear side **66** comprises a rear sealing strip **74** that also extends longitudinally across the pouch **40**. The front sealing strip **72** and the rear sealing strip **74** define a closure mechanism, which includes a first or male closure profile **76** (see FIG. **3**) defined by the front sealing strip **72**, and a second or female closure profile **78** defined by the rear sealing strip **74**. The front sealing strip **72** and the rear sealing strip **74** comprise the male closure profile **76** and the female closure profile **78**, respectively, and further include various base regions of the front side **64** and the rear side **66** of the closure system **44**, respectively, as discussed below. Further, a handle or lip **80** is further disposed on the rear side **66**, which defines a generally trapezoidal extension that extends upward from the rear sealing strip **74**. The lip **80** includes a plurality of longitudinal ribs **82** disposed horizontally therealong that may assist with allowing a user to grip the lip **80** to open the pouch **40** (see FIG. **2**). The ribs **82** may be in the form of protrusions that extend outward from the lip **80**, or grooves that extend into or through the lip **80**.

Referring now to FIG. **3**, the male closure profile **76** is disposed on the front side **64** of the closure system **44**, and the female closure profile **78** is disposed on the rear side **66** of the closure system **44**, thus, the male closure profile **76** and the female closure profile **78** extend along opposing portions of an inner side **84** of the closure system **44**. As shown, the male closure profile **76** includes a male closure element **86** and the female closure profile **78** includes a female closure element **88** that are each unitary with the front side **64** and the rear side **66** of the closure system **44**. The male closure element **86** and the female closure element **88** extend inwardly along a length **90** (see FIG. **2**) defined between the right tab **70** and the left tab **68**. The male closure element **86** and the female closure element **88** are aligned with respect to one another. Particular aspects of the male closure profile **76** and the female closure profile **78** are discussed in greater detail with respect to the embodiments discussed and shown in FIGS. **5A-10D**.

Still referring to FIG. **3**, the pouch **40** defines a longitudinal axis or plane **92** that extends through the peripheral edge **50**, and a horizontal axis or plane **94** that extends orthogonally through the longitudinal plane **92**. Various dimensions of the pouch **40** are shown, including the length **90** of the closure system **44** measured in a direction perpendicular to the longitudinal plane **92** (see FIG. **2**), a height **96** of the front side **64** of the closure system **44**, a height **98** of the rear side **66** of the closure system **44**, a height **100** of the body **42**, and a height **102** of the pouch **40**. Each of the heights **96**, **98**, **100**, **102** are measured along lines that are parallel with respect to the longitudinal plane **92**. A width **104** of the closure system **44** and a width **106** of the body **42** are shown, which each define a widest measurement of the closure system **44** and body **42**, respectively. While the widths **104**, **106** are illustrated at a widest point of the pouch **40**, thus, defining a widest width of the pouch **40** in an open configuration, the term "width" is to be construed as a width taken at any point along each respective element of the pouch **40**.

While the body **42** and the closure system **44** of the pouch **40** have varying heights **96**, **98**, **100**, **102** and widths **104**, **106**, these differences relate to the particular capacity of the receptacle **58** and profile of the pouch **40**, and the desired amount of food or other material(s) that can be placed into the receptacle **58**. However, the various dimensional relationships between the body **42** and the closure system **44** of the pouch **40** may vary within the following ranges. Further, while the pouch **40** is shown without a flat bottom wall, it is contemplated that the pouch **40** may be another type of container that includes additional walls, such as a bottom wall, that would allow the pouch **40** to rest upon a resting surface without additional components to assist therewith.

Still referring to FIG. **3**, the height **96** may be between about 50% and about 95%, between about 60% and about 85%, or between about 70% and about 80% of the height **98** of the rear side **66** of the closure system **44**. In some embodiments, the height **96** of the front side **64** of the closure system **44** may be between about 5% and about 30%, between about 10% and about 25%, or between about 10% and about 15% of the height **100** of the body **42**. The height **96** of the front side **64** may be between about 2% and about 30%, between about 5% and about 25%, or between about 5% and about 15% of the height **102** of the pouch **40**. The width **104** of the closure system **44** may be between about

100% and about 140%, between about 110% and about 130%, or between about 115% and about 120% of the width **106** of the body **42**.

Referring now to FIG. **5**A, a detail view is shown of a first example of the male closure profile **76** of FIGS. **1-4**. The male closure profile **76** includes the male closure element **86** and a base region **110**. The male closure element **86** comprises a stem **114** that extends outward from the base region **110** and joins a head portion **116**. The head portion **116** includes alternating segments of different shapes or profiles, but preferably has alternating segments of two differently shaped profiles such as an arrow-shaped or primary profile **118** and an oversized or secondary profile **120**. The male closure element **86** is symmetric about a longitudinal center plane or centerline **122**; however, alternative asymmetric embodiments are contemplated as will be further discussed herein. In some aspects, the secondary profile **120** of the head portion **116** defines discrete interdigitations along the male closure strip **108**, and the secondary profile **120** is molded over or extends from the primary profile **118** such that the primary profile **118** and the secondary profile **120** are molded as unitary components with one another, the stem **114**, and the base region **110**. The male closure element **86** defines a height **124** and a thickness **126**, the primary profile **118** of the male closure element **86** defines a height **128** and a thickness **130**, the secondary profile **120** of the male closure element **86** defines a height **132** and a thickness **134**, the stem **114** defines a height **136** and a thickness **138**, and the base region **110** defines a thickness **140**.

The primary profile **118** further defines an outer corner **142** and inner corners **144** that are disposed in a triangular configuration, and the primary profile **118** and the stem **114** are molded as unitary components with the base region **110**. In some aspects, the primary profile **118** extends continuously along the male closure strip **108** (see FIG. **4**). Thin regions **146** (see FIG. **4**) of the male closure strip **108** are defined as discrete regions that do not include the interdigitations defined by the secondary profile **120**, i.e., regions in which the head portion **116** is defined only by the primary profile **118**.

In some aspects, the secondary profile **120** of the head portion **116** defines a rectangular profile, although it is contemplated that other configurations or shapes can be used for the secondary profile **120** as will be discussed for FIGS. **6**A-**10**D. In the embodiment illustrated in FIG. **5**A, the secondary profile **120** is defined by an outward face **148**, side faces **152**, and an inward face **150** (see FIGS. **7**A, **8**A, **9**A, **10**A) such that the side faces **152** connect the outward face **148** with the inward face **150**. The outward face **148** is defined by a first vertical line or plane **154** that extends in a direction that is perpendicular with respect to the centerline **122** and through an outermost point **156** along the outer corner **142** of the primary profile **118**. The outward face **148** extends between the side faces **152** along the vertical plane **154**, and the height **132** of the secondary profile **120** is measured in a direction perpendicular with respect to the centerline **122** and along the outward face **148**. The thickness **134** of the secondary profile **120** is measured in a direction parallel with respect to the centerline **122** and inward from the outward face **148** to the inward face **150**, the inward face **150** defined by a second vertical plane **158** that extends in a direction that is parallel with respect to the first vertical plane **154** and through a point **160** in the primary profile **118**. The side faces **152** extend between the outward face **148** and the inward face **150**. The secondary profile **120** is molded over or extends from the primary profile **118** to define an oversized region **162** of the male closure element **86**. In this way, the inward face **150** is entirely defined by the primary profile **118** such that only the side faces **152** and the outward face **148** are visible.

Still referring to FIG. **5**A, the height **128** of the primary profile **118** is greater than the height **136** of the stem **114**. In some embodiments, the thickness **140** of the base region **110** is between about 10% and about 60%, between about 20% and about 50%, at least about 10%, at least about 20%, at least about 30%, at least about 40%, or at least about 50% of the thickness **126** of the male closure element **86**. In some aspects, the height of the secondary profile **120** is between about 50% and about 300%, between about 100% and about 200%, between about 125% and about 175%, between about 175% and about 200%, between about 50% and about 100%, between about 50% and about 60%, between about 60% and about 70%, or between about 70% and about 80% of the height **128** of the primary profile **118**. In some embodiments, the thickness **134** of the secondary profile **120** is between about 25% and about 125%, between about 25% and about 75%, between about 40% and about 60%, between about 60% and about 70%, between about 80% and about 90%, or between about 90% and about 100% of the thickness **130** of the primary profile **118**.

Referring now to FIG. **5**D, a top view is illustrated of a mold **164** used to form the closure mechanism. To provide desired auditory/tactile feedback during use of the closure mechanism, oversized regions **162** are spaced from one another along the length of the portion of the mold **164** that is associated with forming the male closure element **86**. A single thin region **146** defines a length **166** measured parallel with respect to the longitudinal plane **92** (see FIG. **5**A), and a single oversized region **162** defines a length **168** measured parallel with respect to the longitudinal plane **92** (see FIG. **5**A). In some aspects, the length **168** is between about 25% and about 400%, between about 50% and about 200%, between about 75% and about 150%, between about 90% and about 110%, or about 100% of the length **166** of a single thin region **146**. In some aspects, the length **168** of a single oversized region **162** and/or the length **166** of a single thin region **146** are each between about 1% and about 10%, between about 1% and about 6%, between about 2% and about 5%, between about 3% and about 4%, or about 3% of the length **90** of the male closure element **86**. In other words, a single thin region **146** and a single oversized region **162** define a combined length that is between about 1% and about 20%, between about 1% and about 10%, between about 2% and about 8%, between about 3% and about 6%, between about 4% and about 6%, or about 5% of the length **90** of the male closure element **86**.

The total length of the oversized regions **162** combined with the total length of the thin regions **146** is equal to the length **90** of the male closure element **86**. Preferably, a total number of oversized regions **162** is between about 50% and about 150%, between about 75% and about 125%, between about 90% and about 110%, between about 90% and about 100%, between about 100% and about 110%, or about 100% of a total number of thin regions **146**. In some aspects, the thin regions **146** define uniform spacing between the oversized regions **162** such that the male closure element **86** is characterized by alternating thin and oversized regions **146**, **162**. Alternatively, the oversized regions **162** may be spaced from one another by the thin regions **146** at irregular intervals.

Referring now to FIG. **5**B, a detail view of the female closure profile **78** of the closure system **44** of FIGS. **1-4** is shown. The female closure profile **78** comprises a base portion **170**, an upper arm **172**, and a lower arm **174**. The

upper arm **172** and the lower arm **174** are spaced apart from one another and extend outward with respect to the base portion **170**. The upper arm **172** has an upper hook portion **176** at the distal free end thereof, and the lower arm **174** has a lower hook portion **178** at the distal free end thereof. The female closure profile **78** further defines a cavity **180**, which is configured to receive the male closure element **86**, and a trapezoidal cross section between the upper arm **172**, the lower arm **174**, and a back cavity surface **182**. The back cavity surface **182** is connected to the upper arm **172** and the lower arm **174** and is defined by a vertical line or plane **184** The upper arm **172** and the lower arm **174**, and more specifically distal ends **186** of the upper hook portion **176** and the lower hook portion **178**, define an opening **188** into the cavity **180**, into which the head of the male closure element **86** is inserted to seal the pouch **40**. The female closure element **88** is symmetrical about the centerline **122** such that the centerline **122** extends through the cavity **180** and the opening **188**; however, alternative asymmetric embodiments are contemplated. The upper arm **172** and the lower arm **174** are configured to deflect inward or outward when the male closure element **86** is inserted into or removed from the cavity **180**. In some aspects, the upper hook portion **176** and the lower hook portion **178** are configured to deflect inward or outward independently of the upper arm **172** and the lower arm **174** when the male closure element **86** is inserted into or removed from the cavity **180**.

The female closure element **88** further defines a height **190** and a thickness **192**, the cavity **180** defines a height **194** and a thickness **196**, and the opening **188** defines a height **198** and a thickness **200**. In some embodiments, the thickness **196** is between about 40% and about 80%, between about 50% and about 70%, between about 55% and about 60%, at least about 50%, at least about 55%, or at least about 60% of the thickness **192** of the female closure element **88**. The thickness **200** of the opening **188** is between about 10% and about 50%, between about 20% and about 40%, between about 30% and about 25%, or at least about 30% of the thickness **196** of the cavity **180**. The height **194** of the cavity **180** is between about 50% and about 70%, between about 55% and about 65%, or at least about 60% of the height **190** of the female closure element **88**. The height **198** of the opening **188** is between about 10% and about 50%, between about 20% and about 40%, between about 30% and about 25%, or at least about 30% of the height **194** of the cavity **180**.

The cavity **180** is at least partially defined by inner surfaces **202***a*, **202***b*, which define inner surfaces **202***a*, **202***b* of upper hook portion **176** and lower hook portion **178**, respectively. The inner surfaces **202***a*, **202***b* may be defined as sealing surfaces, as these surfaces align with portions of the male closure element **86** to provide an enhanced seal. The cavity **180** is also at least partially defined by lateral surfaces **204***a*, **204***b* that extend along the upper arm **172** and the lower arm **174**. The inner surfaces **202***a*, **202***b* are angled inward from the distal ends **186** of the upper arm **172** and the lower arm **174** toward the plane **184**. Finally, the back cavity surface **182** defines an innermost surface **206** of the cavity **180**. In the present embodiment, the back cavity surface **182** extends along the plane **184** and does not follow a profile of the male closure element **86**. While not shown in FIG. **5**B, it is contemplated that one or more of the inner surfaces **202***a*, **202***b* or the lateral surfaces **204***a*, **204***b* may follow the profile of the male closure element **86** in other embodiments. In the present embodiments, surfaces that do not follow a corresponding profile portion can be considered to have different shapes or curvatures defining the respective surfaces, i.e., they do not mirror one another or have profiles that substantially conform with one another.

It is contemplated that alternative configurations may exist for the female closure profile **78**. In some embodiments, more or fewer surfaces may be included. For example, the cavity **180** may be defined by the inner surfaces **202***a*, **202***b*, and a generally circular outer surface (not shown) that extends from outermost points of the inner surfaces **202***a*, **202***b*. To that end, the cavity **180** may define a variety of cross-sectional areas, and may be in the shape of a square, a rectangle, a triangle, a hexagon, etc. In some embodiments, multiple sub-cavities may be defined by the various surfaces that define the cavity **180** such that multiple compartments are formed that receive the male closure element **86**. In some embodiments, the cavity **180** may not be defined by the lateral surfaces **204***a*, **204***b*, and may instead only include an outer surface (not shown) which may extend from intersections with the inner surfaces **202***a*, **202***b*, i.e., to define a circular or semi-circular cross section.

FIG. **5**C is a detail view of the male and female closure profiles **76**, **78** of FIGS. **5**A and **5**B in a closed configuration. The closed configuration is realized when the male closure profile **76** is inserted into the cavity **180** of the female closure profile **78**. When initially inserted into the cavity **180**, the secondary profile **120** of the male closure element **86** causes the upper arm **172** and the lower arm **174** of the female closure element **88** to spread open to a greater degree than the primary profile **118**, and the upper arm **172** and lower arm **174** snap back to their original configuration after the male closure element **86** has been inserted entirely into the cavity **180**. In other words, the upper arm **172** and the lower arm **174** create an audible snap or click when they return to their original configuration and form a water-tight seal with the male closure element **86** after the secondary profile **120** of the male closure element **86** has been passed through the opening **188** and into the cavity **180**. The audible clicking may have a specific sound level that is measured in decibels (dB), and the frequency of the audible clicking is an important factor in determining user preference. For example, the audible clicking may have a sound level that is between about 0 dB and about 80 dB. Moreover, inserting head portion **116** into the cavity **180** provides enhanced tactile feedback characterized by each of the oversized regions **162** being fully inserted into the cavity **180** since the secondary profile **120** is non-continuous along the length **90** of the male closure element **86**. This is particularly advantageous for silicone closure mechanisms which are typically larger, thicker, and more resilient than zippers for thermoplastic bags.

Still referring to FIG. **5**C, the closure system **44** defines a total thickness **208**. In some aspects, the height **132** of the secondary profile **120** is between about 50% and about 100%, between about 60% and about 90%, between about 70% and about 80%, between about 80% and about 90%, at least about 80%, at least about 85%, at least about 90%, or at least about 95% of the height **194** of the cavity **180**. In some aspects, the thickness **134** of the secondary profile **120** is between about 75% and about 125%, between about 85% and about 115%, between about 90% and about 110%, between about 95% and about 105%, at least about 80%, at least about 90%, at least about 95%, or at least about 100% of the thickness **200** of the opening **188**. Still referring to FIG. **5**C, the height **136** of the stem **114** is between about 50% and about 200%, between about 75% and about 150%, between about 90% and about 130%, between about 100% and about 120%, at least about 90%, at least about 100%, at

least about 110%, at least about 120%, or at least about 130% of the height **198** of the opening **188**.

In some embodiments, the height **136** of the stem **114** is between about 10% and about 50% of the height **190** of the female closure element **88**, or between about 20% and about 40% of the height **190** of the female closure element **88**, or between about 25% and about 35% of the height **190** of the female closure element **88**, or less than about 50%, or less than about 40%, or less than about 30%, or less than about 20% of the height **190** of the female closure element **88**.

Through testing, it was determined that having the stem **114** with the height **136** that is at least the same as the height **198** of the opening **188** provides for enhanced sealing of the closure system **44**. To that end, the opening **188** is preferably smaller than the stem **114**. It is preferable to require between about 3 pounds force (lbf) (13 newtons (N)) and about 10 lbf (45 N) to open and close the closure system **44**. In some embodiments, between about 3 lbf (13 N) and about 20 lbf (90 N), between about 5 lbf (22 N) and about 15 lbf (67 N), or between about 7 lbf (31 N) and about 12 lbf (53 N) is required to open and close the closure system **44**. This feature is achieved by the design of the upper and lower arms **172**, **174** of the female closure element **88** and the corners of the male head portion **116**. The outer corner **142** of the head portion **116** controls the force required for the contents to fall out of the pouch or container when in the closed configuration, while the inner corners **144** of the primary profile **118** or the side faces **152** of the secondary profile **120** control the force required to open and close the closure system **44**.

Referring again to FIG. **5**D, the mold **164** includes a male mold cavity **210** and a female mold cavity **212**. The female mold cavity **212** includes an upper arm groove **214** and a lower arm groove **216**. The male mold cavity **210** includes oversized grooves **218** spaced from one another by portions of a thin groove **220**. As previously discussed, an LIM process or another manufacturing process is utilized to mold the male closure profile **76** and the female closure profile **78** with the pouch as a unitary construction. While not explicitly shown in FIG. **5**D, it is contemplated that either end of the male mold cavity **210** or the female mold cavity **212** can be formed in any shape that is particularly desirable, such as molding either end of the male or female mold cavities **210**, **212** to include a curved edge **222** (see, e.g., FIGS. **7**D, **8**D, **9**D, and **10**D) to provide further auditory/tactile feedback when engaging the closure system **44** at either end of the pouch **40**. Additionally, it is contemplated that the oversized grooves **218** are disposed asymmetrically within the male closure profile **76** with respect to the thin groove **220** (see FIG. **10**D). In some embodiments, the oversized grooves **218** are intermittently spaced from one another across the thin groove **220** to define an asymmetric oversized region pattern.

Referring now to FIGS. **6**A-**6**D, another example of the closure system **44** is shown in which the female closure element **88** is similar to the female closure element **88** of FIG. **6**A, but differing in that the male closure element **86** includes a secondary profile **240** that is larger than the secondary profile **120** illustrated in FIGS. **5**A-**5**D. Referring specifically now to FIG. **6**A, the outward face **148** of the secondary profile **240** is defined by the first vertical line or plane **154** that extends perpendicularly through the centerline **122** and past the outermost point of the primary profile **118**. In some embodiments, an outermost point of the secondary profile **240**, defined by the first vertical plane **154**, extends past the outermost point of the primary profile **118** such that the outer corner **142** of the primary profile **118** is spaced from the outward face **148** of the secondary profile **240**. The outward face **148** extends between the side faces **152** along the first vertical plane **154**, and a height **132** of the secondary profile **240** is measured in a direction perpendicular with respect to the centerline **122** and between the side faces **152**. A thickness **134** of the secondary profile **240** is measured in a direction parallel with respect to the centerline **122** and inwardly from the outward face **148** to the inward face **150**, the inward face **150** defined by the second vertical plane **158** that extends in a direction that is parallel to the first vertical plane **154** at an innermost point **242** or plane of the primary profile **118**.

The side faces **152** extend between the outward face **148** and the inward face **150**. In some embodiments, side faces **152** are spaced from the inner corners **144** such that the primary profile **118** is completely enveloped by the secondary profile **240**. In some aspects, the height of the secondary profile **240** is between about 100% and about 200%, between about 100% and 150%, between about 110% and about 135%, between about 115% and about 125%, or between about 120% and about 130% of the height **128** of the primary profile **118**. Further, the thickness **134** of the secondary profile **120** is between about 80% and about 120%, between about 90% and about 115%, between about 95% and about 105%, at least about 100%, or about 100% of the thickness **130** of the primary profile **118**. In this way, the oversized regions **162** are entirely defined by the secondary profile **240** since the secondary profile **240** completely envelops the primary profile **118**. In some embodiments, the height **132** of the secondary profile **240** is between about 175% and about 225%, or about 200% of the height **132** of the secondary profile **120** illustrated in FIG. **5**A. In some embodiments, the thickness **134** of the secondary profile **240** is between about 200% and about 220%, or about 210% of the thickness **134** of the secondary profile **120** illustrated in FIG. **5**A.

Referring now to FIG. **6**C, the height **132** of the secondary profile **240** is between about 100% and about 200%, between about 125% and about 175%, between about 140% and about 160%, between about 145% and about 155%, at least about 125%, at least about 140%, or at least about 150% of the height **194** of the cavity **180**. In some aspects, the thickness **134** of the secondary profile **240** is between about 50% and about 100%, between about 60% and about 90%, between about 70% and about 80%, between about 80% and about 90%, or at least about 75% of the thickness **200** of the opening **188**. Still referring to FIG. **6**C, the height **136** of the stem **114** is between about 50% and about 200%, between about 75% and about 150%, between about 90% and about 130%, between about 100% and about 120%, at least about 90%, at least about 100%, at least about 110%, at least about 120%, or at least about 130% of the height **198** of the opening **188**.

Referring now to FIGS. **7**A-**7**D, yet another example of the closure system **44** is shown, in which the cavity **180** of the female closure element **88** is similar to the cavity **180** illustrated in FIG. **6**A. Additionally, the male closure element **86** includes a primary profile **280** that is thicker than the primary profile **118** and a secondary profile **340** that is thinner than the secondary profile **240** as illustrated in FIGS. **5**A-**6**D. Referring specifically to FIG. **7**A, the outward face **148** is defined by the first vertical line or plane **154** that extends perpendicularly through the centerline **122** and through a point of the primary profile **280** such that the outer corner **142** of the primary profile **280** extends past the outward face **148**. The outward face **148** extends between the side faces **152** along the vertical plane, and a height **132**

of the secondary profile **340** is measured in a direction perpendicular with respect to the centerline **122** and between the side faces **152**. The thickness **134** of the secondary profile **340** is measured in a direction parallel with respect to the centerline **122** and inwardly from the outward face **148** to the inward face **150**, defined by the second vertical plane **158** that extends in a direction that is parallel to the first vertical plane **154** at an innermost point **242** or plane of the primary profile **280**.

The side faces **152** extend between the outward face **148** and the inward face **150**. In some embodiments, side faces **152** are spaced outward from the inner corners **144**. In some aspects, the height **132** of the secondary profile **340** is between about 100% and about 200%, between about 100% and about 200%, between about 140% and about 160%, between about 150% and about 170%, or between about 155% and about 165% of the height **128** of the primary profile **280**. Further, the thickness **134** of the secondary profile **340** is between about 50% and about 100%, between about 60% and about 80%, between about 70% and about 80%, at least about 65%, or at least about 75% of the thickness **130** of the primary profile **280**. In some embodiments, the thickness **130** of the primary profile **280** is between about 125% and about 175%, or about 150% of the thickness **130** of the primary profile **118** illustrated in FIG. **5**A. In some embodiments, the height **132** of the secondary profile **340** is between about 75% and about 95%, or about 85% of the height **132** of the secondary profile **240** illustrated in FIG. **6**A. In some embodiments, the thickness **134** of the secondary profile **340** is between about 70% and about 90%, or about 80% of the thickness **134** of the secondary profile **240** illustrated in FIG. **6**A.

Referring now to FIG. **7**C, the height **128** of the primary profile **280** is between about 90% and about 110% of the height **194** of the cavity **180**, and the thickness **130** of the primary profile **280** is about 100% of the thickness **196** of the cavity **180**. In some embodiments, the height **132** of the secondary profile **340** is between about 100% and about 200%, between about 100% and about 200%, between about 140% and about 160%, between about 150% and about 170%, or between about 155% and about 165% of the height **194** of the cavity **180**. In some aspects, the thickness **134** of the secondary profile **340** is between about 50% and about 100%, between about 60% and about 80%, between about 70% and about 80%, at least about 65%, or at least about 75% of the thickness **196** of the cavity **180**. Still referring to FIG. **7**C, the height **136** of the stem **114** is between about 150% and about 250%, between about 175% and about 225%, between about 190% and about 120%, at least about 180%, or at least about 200% of the height **198** of the opening **188**.

Referring now to FIGS. **8**A-**8**D, still another example of the closure system **44** is shown, in which the male closure element **86** is similar to the male closure element **86** of FIG. **7**C, but the female closure element **88** includes a cavity **180** that is taller than the profiles illustrated in FIGS. **5**B, **6**B, and **7**B. Specifically referring to FIG. **8**B, the thickness **196** of the cavity **180** is between about 40% and about 60%, between about 45% and about 55%, or at least about 50% of the thickness **192** of the female closure element **88**. The thickness **200** of the opening **188** is between about 40% and about 60%, between about 45% and about 55%, or at least about 50% of the thickness **196** of the cavity **180**. The height **194** of the cavity **180** is between about 50% and about 100%, between about 70% and about 80%, or at least about 75% of the height **190** of the female closure element **88**. The height **198** of the opening **188** is between about 40% and about 60%, between about 45% and about 50%, or at least about 45% of the height **194** of the cavity **180**. In some embodiments, the height **194** of the cavity **180** is between about 125% and about 175%, or about 150% of the height **194** of the cavity **180** illustrated in FIG. **7**B. In some embodiments, the thickness **196** of the cavity **180** is between about 90% and about 110%, or about 100% of the thickness **196** of the cavity **180** illustrated in FIG. **7**B.

Referring now to FIG. **8**C, the height **128** of the primary profile **280** is between about 50% and about 75% of the height **194** of the cavity **180**, and the thickness **130** of the primary profile **280** is about 100% of the thickness **196** of the cavity **180**. In some embodiments, the height **132** of the secondary profile **340** is between about 75% and about 125%, between about 90% and about 110%, between about 95% and about 105%, or at least about 100% of the height **194** of the cavity **180**. In some aspects, the thickness **134** of the secondary profile **340** is between about 50% and about 100%, between about 60% and about 80%, between about 70% and about 80%, at least about 65%, or at least about 75% of the thickness **196** of the cavity **180**. Still referring to FIG. **8**C, the height **136** of the stem **114** is between about 50% and about 100%, between about 60% and about 80%, between about 70% and about 80%, at least about 75%, or about 75% of the height **198** of the opening **188**.

Referring now to FIGS. **9**A-**9**D, another example of the closure system **44** is shown, in which the female closure element **88** is similar to the female closure element **88** of FIG. **8**B, but the male closure element **86** includes a secondary profile **440** that is arrow-shaped rather than the rectangular profiles illustrated in FIGS. **5**A, **6**A, **7**A, and **8**A. Referring specifically to FIG. **9**A, the secondary profile **440** defines an outward face **148**, curved side faces **442**, and an inward face **150** such that the curved side faces **442** connect the outward face **148** with the inward face **150**. The outward face **148** is defined by the first vertical line or plane **154** that extends perpendicularly through the centerline **122** and through a point of the primary profile **280**. The outer corner **142** of the primary profile **280** extends outward past the outward face **148** of the secondary profile **440**. The outward face **148** extends between the curved side faces **442** along the vertical plane **154**. In some embodiments, the curved side faces **442** extend along the primary profile **280**, or the curved side faces do not extend directly along the primary profile **280** and instead extend beyond the primary profile **280**. The curved side faces **442** further extend past the inner corners **144** and intersect with the inward face **150** to define oversized inner corners **444** of the secondary profile **440**. In some aspects, the oversized inner corners **444** are truncated to define corner side faces **152** that join the inward face **150** with the curved side faces **442**.

Referring in particular to FIG. **9**A, the thickness **134** of the secondary profile **440** is measured in a direction parallel with respect to the centerline **122** and inwardly from the outward face **148** to the inward face **150**, which is defined by the second vertical plane **158** that extends in a direction that is parallel to the first vertical plane **154** at an innermost point or plane of the primary profile **280**. The curved side faces **442** extend between the outward face **148** and the inward face **150**. The height **132** of the secondary profile **440** is measured in a direction perpendicular with respect to the centerline **122** and between the oversized inner corners **444** along the inward face **150**. In some aspects, the height of the secondary profile **440** is between about 100% and about 200%, between about 125% and about 175%, between about 145% and about 155%, at least about 150%, or about 150% of the height **128** of the primary profile **280**. Further, the

thickness **134** of the secondary profile **440** is between about 50% and about 100%, between about 60% and about 80%, between about 60% and about 70%, or at least about 65% of the thickness **130** of the primary profile **280**. In this way, the oversized regions **162** are entirely defined by the secondary profile **440** since the secondary profile **440** completely envelops the primary profile **280**. In some embodiments, the height **132** of the secondary profile **440** is between about 90% and about 110%, or about 100% of the height **132** of the secondary profile **340** illustrated in FIG. **7**A. In some embodiments, the thickness **134** of the secondary profile **440** is between about 90% and about 110%, or about 100% of the thickness **134** of the secondary profile **340** illustrated in FIG. **7**A.

Referring now to FIG. **9**C, the height **132** of the secondary profile **440** in some aspects, is between 75% and about 125%, between about 90% and about 110%, between about 95% and about 105%, or at least about 100% of the height **194** of the cavity **180**. In some aspects, the thickness **134** of the secondary profile **440** is between about 50% and about 100%, between about 60% and about 80%, between about 60% and about 70%, or at least about 65% of the thickness **196** of the cavity **180**. Still referring to FIG. **9**C, the height **136** of the stem **114** is between about 50% and about 100%, between about 60% and about 80%, between about 70% and about 80%, at least about 75%, or about 75% of the height **198** of the opening **188**.

Referring now to FIGS. **10**A-**10**D, yet another example of the closure system **44** is shown, in which the male closure element **86** includes a stem **114** that is tapered rather than a stem **114** that is uniform in width, such as in FIGS. **5**A, **6**A, **7**A, **8**A, and **9**A. Additionally, the female closure element **88** includes a cavity **180** that defines a smaller cross-section than the profile illustrated in FIG. **9**B. Specifically referring to FIG. **10**A, the stem **114** is tapered in a direction from the base region **110** to the head portion **116** such that the stem **114** becomes shorter as it extends toward the head portion **116**. The height **136** of the stem **114** measured at along the second vertical plane **158** is between about 50% and about 100%, between about 60% and about 80%, between about 70% and about 80%, at least about 75%, or about 75% of the height **198** of the opening **188**.

Referring now to FIG. **10**B, the upper arm **172** and the lower arm **174** of the female closure element **88** define a greater degree of curvature at distal ends **186** thereof. Additionally, the inner surfaces **202***a*, **202***b* of the upper and lower arms **172**, **174** extend in a substantially more planar manner, i.e., substantially parallel with respect to the centerline **122**, than the inner surfaces **202***a*, **202***b* of upper and lower arms **172**, **174** shown in FIGS. **5**B, **6**B, **7**B, **8**B, and **9**B. Additionally, the thickness **196** of the cavity **180** is between about 40% and about 60%, between about 45% and about 55%, or at least about 45% of the thickness **192** of the female closure element **88**. The thickness **200** of the opening **188** is between about 30% and about 50%, between about 40% and about 45%, or at least about 40% of the thickness **196** of the cavity **180**. The height **194** of the cavity **180** is between about 50% and about 100%, between about 70% and about 80%, or at least about 75% of the height **190** of the female closure element **88**. The height **198** of the opening **188** is between about 40% and about 60%, between about 45% and about 50%, or at least about 45% of the height **194** of the cavity **180**. In some embodiments, the height **194** of the cavity **180** is between about 75% and about 100%, or about 85% of the height **194** of the cavity **180** illustrated in FIG. **8**B. In some embodiments, the thickness **196** of the cavity **180** is between about 70% and about 90%, or about 85% of the thickness **196** of the cavity **180** illustrated in FIG. **8**B.

Referring now to FIG. **10**C, the height **128** of the primary profile **280** is between about 50% and about 75% of the height **194** of the cavity **180**, and the thickness **130** of the primary profile **280** is about 100% of the thickness **196** of the cavity **180**. In some embodiments, the height **132** of the secondary profile **440** is between about 75% and about 125%, between about 90% and about 110%, between about 95% and about 105%, or at least about 95% of the height **194** of the cavity **180**. In some aspects, the thickness **134** of the secondary profile **440** is between about 50% and about 100%, between about 60% and about 80%, between about 70% and about 80%, at least about 65%, or at least about 75% of the thickness **196** of the cavity **180**.

The foregoing examples provide an enhanced silicone sealing structure that includes a male closure profile **76** with intermittent interdigitations disposed therealong, which provides unique auditory/tactile feedback during use of the closure system **44**. Specifically, the male closure profile **76** includes oversized regions **162** of the head portion **116** that are molded over a continuous primary profile **118**, **280** and the oversized regions **162** are spaced apart from one another to define a noncontinuous, enhanced sealing profile which is more desirable for a user. A functional benefit is also achieved in that when the male closure element **86** is inserted into the female closure element **88**, as shown in FIGS. **5**C, **6**C, **7**C, **8**C, **9**C, and **10**C, a bending force is created that causes the arms **172**, **174** of the female closure element **88** to flex open. The flexure is released after the male closure element **86** has been fully inserted into the cavity **180** female closure profile **78**, thereby causing the arms **172**, **174** to snap to their original configuration and engage both the oversized regions **162** and the continuous, thin regions **146**. During closure of the pouch **40**, the flexure caused by the oversized regions **162** and the snap caused by the arms **172**, **174** of the female closure element **88** returning to their original configuration provides direct audio and tactile feedback to the user, indicating which portions of the pouch **40** have been closed to form a fluid-tight seal.

This is particularly advantageous for pouches made of silicone or another similar elastomer that are formed as a as a unitary component. Specifically, elastomeric pouches such as those described herein are formed by an entirely different process than conventionally used thermoplastic pouches and are thus subject to substantially different design challenges than those of thermoplastic pouches. For example, the closure mechanisms of elastomeric pouches are typically much larger, thicker, and more resilient than those used for conventional thermoplastic pouches. As such, traditionally used techniques, such as post-manufacture deformation, are not effective when manufacturing elastomeric closure mechanisms with enhanced audio/tactile feedback characteristics. LIM offers several advantages over post-manufacture deformation techniques that are traditionally used to manufacture thermoplastic bags. In particular, LIM allows for the profiles of the elastomeric closure mechanism to be precisely molded while accommodating the large sizes thereof. Additionally, LIM manufacturing simplifies the manufacturing process since all components of the elastomeric bag are formed together in a single step, including the improved profiles of the male closure element **86**, which provides enhanced auditory/tactile feedback.

Therefore, the subject technology provides a further benefit in that it allows for precise closure profiles to be manufactured, which enhance audio/tactile feedback. More-

over, the design of the male closure element **86** to include a continuous, primary profile and an oversized, secondary profile that is formed over the primary profile is a significant advancement since it provides a fluid-tight seal and unique auditory/tactile feedback. The continuous profile maintains the fluid-tight seal along the length of the closure element, and the oversized, non-continuous profile provides unique tactile/auditory feedback as well as increasing the retaining force of the female closure element on the male closure element. Thus, these features, alone or in combination, achieve an enhanced closure system that provides useful auditory/tactile feedback to a user, and provides for an enhanced seal.

Additionally, as would be appreciated by those of ordinary skill in the pertinent art, the subject technology is applicable to any type of bag, pouch, package, and various other storage containers, e.g., snack, sandwich, quart, and gallon size bags. The subject technology is also adaptable to bags having double zipper, or multiple zipper, or other type of closure mechanisms. Furthermore, it is contemplated that the subject technology disclosed herein could be applied to a number of different closure systems to enhance aspects of their function, such as those disclosed in U.S. Pat. No. 9,371,153 and/or U.S. Patent Pub. No. 2022/0402658, which are incorporated by reference herein in their entirety.

INDUSTRIAL APPLICABILITY

The closure systems as described herein advantageously provide for containers or pouches that are re-usable and include sealing systems having enhanced sealing capabilities while being able to seal and unseal for an end user.

Numerous modifications will be apparent to those skilled in the art in view of the foregoing description. Accordingly, this description is to be construed as illustrative only and is presented for the purpose of enabling those skilled in the art to make and use the disclosure. The exclusive rights to all modifications which come within the scope of the application are reserved. All patents and publications are incorporated by reference.

We claim:

1. A container or pouch made entirely from an elastomer, comprising:

a body, comprising:

a front wall; and

a rear wall that is connected to the front wall along a peripheral edge; and

a closure system, comprising:

a front side having a male closure profile that includes a male closure element; and

a rear side having a female closure profile that includes a female closure element and defining a cavity,

wherein a centerline extends through the cavity such that the female closure element is symmetrical about the centerline,

wherein the male closure element includes a head portion that has a continuous, primary profile and a non-continuous, secondary profile that extends from the primary profile,

wherein a height of the secondary profile measured in a direction that is perpendicular to the centerline is greater than a height of the primary profile measured in a direction that is perpendicular to the centerline, and

wherein the secondary profile comprises an outward face that is defined by a first vertical plane that extends in a direction perpendicular to the centerline, an inward face that is defined by a second vertical plane that is parallel to the first vertical plane, and side faces that extend between the outward face and the inward face.

2. The container or pouch of claim **1**, wherein the female closure element further comprises a base portion, an upper arm that extends outward from the base portion, and a lower arm that extends outward with respect to the base portion, and

wherein an opening into the cavity of the female closure element is defined between the upper arm and the lower arm.

3. The container or pouch of claim **2**, wherein the upper arm defines an upper hook portion at a distal free end thereof and the lower arm defines a lower hook portion at a distal free end thereof, and wherein the opening is further defined between the upper hook portion and the lower hook portion.

4. The container or pouch of claim **1**, wherein the male closure element further comprises a base region and a stem that extends between the base region and the head portion, and wherein the primary profile, the secondary profile, the stem, and the base region are molded together with the front wall to form a unitary component.

5. The container or pouch of claim **1**, wherein the male closure element further includes a base region and a stem that extends from the base region to the head portion, and

wherein a height of the stem measured in a direction that is perpendicular to the centerline is between 10% and 50% of a height of the female closure element measured in a direction that is perpendicular to the centerline.

6. The container or pouch of claim **1**, wherein the height of the secondary profile is greater than a height of the cavity measured in a direction perpendicular to the centerline.

7. The container or pouch of claim **1**, wherein the primary profile defines thin regions of the male closure element and the secondary profile defines oversized regions of the male closure element, and

wherein a length of a single oversized region of the male closure element measured in a direction parallel to a longitudinal plane that extends through the peripheral edge is between 1% and 10% of a length of the male closure element measured in a direction parallel to the longitudinal plane.

8. The container or pouch of claim **1**, wherein alternating portions of the secondary profile are uniformly spaced from one another by alternating portions of the primary profile.

9. A container or pouch made entirely from an elastomer, comprising:

a body, comprising:

a front wall; and

a rear wall that is connected to the front wall along a peripheral edge; and

a closure system, comprising:

a front side having a male closure profile that includes a male closure element; and

a rear side having a female closure profile that includes a female closure element and defining a cavity,

wherein a centerline extends through the cavity such that the female closure element is symmetrical about the centerline,

wherein the male closure element includes a head portion that has a continuous, primary profile and a non-continuous, secondary profile that extends from the primary profile, and

wherein a height of the secondary profile measured in a direction that is perpendicular to the centerline is greater than a height of the cavity measured in a direction that is perpendicular to the centerline.

10. The container or pouch of claim 9, wherein the secondary profile comprises an outward face that is defined by a first vertical plane that extends in a direction perpendicular to the centerline, an inward face that is defined by a second vertical plane that is parallel to the first vertical plane, and side faces that extend between the outward face and the inward face.

11. The container or pouch of claim 9, wherein the female closure element further comprises a base portion, an upper arm that extends outward from the base portion, and a lower arm that extends outward with respect to the base portion, and

wherein an opening into the cavity of the female closure element is defined between the upper arm and the lower arm.

12. The container or pouch of claim 11, wherein the upper arm defines an upper hook portion at a distal free end thereof and the lower arm defines a lower hook portion at a distal free end thereof, and

wherein the opening is further defined between the upper hook portion and the lower hook portion.

13. The container or pouch of claim 9, wherein the male closure element further comprises a base region and a stem that extends from the base region to the head portion, and

wherein a height of the stem measured in a direction that is perpendicular to the centerline is between 10% and 50% of a height of the female closure element measured in a direction that is perpendicular to the centerline.

14. The container or pouch of claim 9, wherein the height of the secondary profile is greater than a height of the primary profile measured in a direction that is perpendicular to the centerline.

15. The container or pouch of claim 9, wherein the primary profile defines thin regions of the male closure element and the secondary profile defines oversized regions of the male closure element, and

wherein a length of a single oversized region of the male closure element measured in a direction parallel to a longitudinal plane that extends through the peripheral edge is between 1% and 10% of a length of the male closure element measured in a direction parallel to the longitudinal plane.

16. The container or pouch of claim 9, wherein alternating portions of the secondary profile are uniformly spaced from one another by alternating portions of the primary profile.

17. A container or pouch made entirely from an elastomer, comprising:

a body, comprising:

a front wall; and

a rear wall that is connected to the front wall along a peripheral edge; and

a closure system, comprising:

a front side having a male closure profile that includes a male closure element; and

a rear side having a female closure profile that includes a female closure element and defining a cavity and an opening,

wherein a longitudinal plane extends through the peripheral edge and a centerline extends through the cavity and the opening such that the female closure element is symmetrical about the centerline,

wherein the male closure element includes a head portion that has a continuous, primary profile that defines thin regions of the male closure element and a non-continuous, secondary profile that extends from the primary profile and defines oversized regions of the male closure element,

wherein a length of a single thin region is measured in a direction parallel to the longitudinal plane and is between 1% and 10% of a length of the male closure element measured in a direction parallel to the longitudinal plane,

wherein a length of a single oversized region of the male closure element is measured in a direction parallel to the longitudinal plane and is between 1% and 10% of the length of the male closure element, and

wherein a height of the secondary profile measured in a direction perpendicular to the centerline is greater than a height of the cavity measured in a direction perpendicular to the centerline.

18. The container or pouch of claim 17, wherein the secondary profile comprises an outward face that is defined by a first vertical plane that extends in a direction perpendicular to the centerline, an inward face that is defined by a second vertical plane that is parallel to the first vertical plane, and side faces that extend between the outward face and the inward face.

19. The container or pouch of claim 17, wherein the female closure element further comprises a base portion, an upper arm that extends outward from the base portion, and a lower arm that extends outward with respect to the base portion, and

wherein the opening of the female closure element is defined between the upper arm and the lower arm.

20. The container or pouch of claim 17, wherein the male closure element further comprises a base region and a stem that extends from the base region to the head portion, and

wherein a height of the stem measured in a direction that is perpendicular to the centerline is between 10% and 50% of a height of the female closure element measured in a direction that is perpendicular to the centerline.

21. The container or pouch of claim 17, wherein alternating portions of the secondary profile are uniformly spaced from one another by alternating portions of the primary profile.

* * * * *