US012414385B2

(12) **United States Patent**
Sirski et al.

(10) **Patent No.: US 12,414,385 B2**
(45) **Date of Patent: Sep. 9, 2025**

(54) **PHOTOVOLTAIC MODULES WITH OFFSET LAYERS**

(71) Applicant: **GAF Energy LLC**, Parsippany, NJ (US)

(72) Inventors: **William Sirski**, San Jose, CA (US); **Emma Dohner**, San Francisco, CA (US); **Nicholas Boitnott**, San Francisco, CA (US)

(73) Assignee: **GAF Energy LLC**, Parsippany, NJ (US)

(*) Notice: Subject to any disclaimer, the term of this patent is extended or adjusted under 35 U.S.C. 154(b) by 0 days.

(21) Appl. No.: **18/457,114**

(22) Filed: **Aug. 28, 2023**

(65) **Prior Publication Data**

US 2024/0072187 A1 Feb. 29, 2024

Related U.S. Application Data

(60) Provisional application No. 63/401,976, filed on Aug. 29, 2022.

(51) **Int. Cl.**
H10F 19/85 (2025.01)
H02S 20/24 (2014.01)

(52) **U.S. Cl.**
CPC ***H10F 19/85*** (2025.01); ***H02S 20/24*** (2014.12)

(58) **Field of Classification Search**
CPC H01L 31/049; H02S 20/23; H02S 20/24; H10F 19/80; H10F 19/85
See application file for complete search history.

(56) **References Cited**

U.S. PATENT DOCUMENTS

1,981,467 A 11/1934 Radtke
3,156,497 A 11/1964 Lessard
4,258,948 A 3/1981 Hoffmann
(Continued)

FOREIGN PATENT DOCUMENTS

CA 2829440 A 5/2019
CH 700095 A2 6/2010
(Continued)

OTHER PUBLICATIONS

Sunflare, Procducts: "Sunflare Develops Prototype For New Residential Solar Shingles"; 2019 <<sunflaresolar.com/news/sunflare-develops-prototype-for-new-residential-solar-shingles>> retrieved Feb. 2, 2021.

(Continued)

Primary Examiner — Golam Mowla
(74) *Attorney, Agent, or Firm* — GREENBERG TRAURIG, LLP

(57) **ABSTRACT**

A system includes a plurality of photovoltaic modules installed on a roof deck. Each of the photovoltaic modules includes solar cells, a first encapsulant encapsulating the solar cells, a frontsheet and a backsheet. The front sheet includes a glass layer. The backsheet includes a first layer and a second layer. Each of the first and second layers includes first, second, third and fourth edges. The first edge of the first layer is offset from the first edge of the second layer, the second edge of the first layer is offset from the second edge of the second layer, the third edge of the first layer is offset from the third edge of the second layer, and the fourth edge of the first layer is offset from the fourth edge of the second layer.

19 Claims, 6 Drawing Sheets

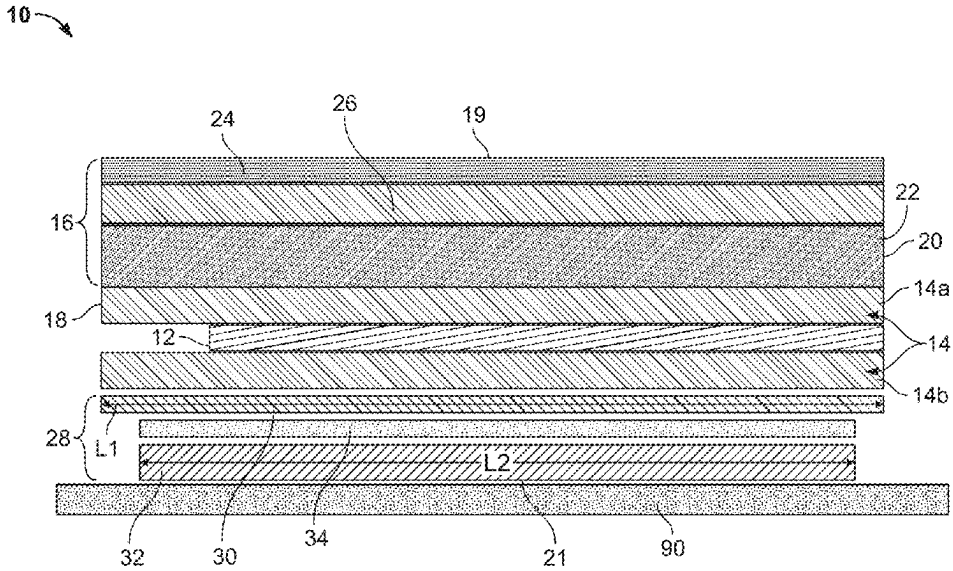

(56) **References Cited**

U.S. PATENT DOCUMENTS

4,349,220 A 9/1982 Carroll et al.
4,499,702 A 2/1985 Turner
4,636,577 A 1/1987 Peterpaul
5,167,579 A 12/1992 Rotter
5,437,735 A 8/1995 Younan et al.
5,590,495 A 1/1997 Bressler et al.
5,642,596 A 7/1997 Waddington
6,008,450 A 12/1999 Ohtsuka et al.
6,033,270 A 3/2000 Stuart
6,046,399 A 4/2000 Kapner
6,201,180 B1 3/2001 Meyer et al.
6,215,060 B1 * 4/2001 Komori B32B 27/308 156/196
6,220,329 B1 4/2001 King et al.
6,320,114 B1 11/2001 Kuechler
6,320,115 B1 11/2001 Kataoka et al.
6,336,304 B1 1/2002 Mimura et al.
6,341,454 B1 1/2002 Koleoglou
6,407,329 B1 6/2002 Iino et al.
6,576,830 B2 6/2003 Nagao et al.
6,928,781 B2 8/2005 Desbois et al.
6,972,367 B2 12/2005 Federspiel et al.
7,138,578 B2 11/2006 Komamine
7,155,870 B2 1/2007 Almy
7,178,295 B2 2/2007 Dinwoodie
7,487,771 B1 2/2009 Eiffert et al.
7,587,864 B2 9/2009 McCaskill et al.
7,678,990 B2 3/2010 McCaskill et al.
7,678,991 B2 3/2010 McCaskill et al.
7,748,191 B2 7/2010 Podirsky
7,819,114 B2 10/2010 Augenbraun et al.
7,824,191 B1 11/2010 Podirsky
7,832,176 B2 11/2010 McCaskill et al.
8,118,109 B1 2/2012 Hacker
8,168,880 B2 5/2012 Jacobs et al.
8,173,889 B2 5/2012 Kalkanoglu et al.
8,210,570 B1 7/2012 Railkar et al.
8,276,329 B2 10/2012 Lenox
8,312,693 B2 11/2012 Cappelli
8,319,093 B2 11/2012 Kalkanoglu et al.
8,333,040 B2 12/2012 Shiao et al.
8,371,076 B2 2/2013 Jones et al.
8,375,653 B2 2/2013 Shiao et al.
8,404,967 B2 3/2013 Kalkanoglu et al.
8,410,349 B2 4/2013 Kalkanoglu et al.
8,418,415 B2 4/2013 Shiao et al.
8,438,796 B2 5/2013 Shiao et al.
8,468,754 B2 6/2013 Railkar et al.
8,468,757 B2 6/2013 Krause et al.
8,505,249 B2 8/2013 Geary
8,512,866 B2 8/2013 Taylor
8,513,517 B2 8/2013 Kalkanoglu et al.
8,586,856 B2 11/2013 Kalkanoglu et al.
8,601,754 B2 12/2013 Jenkins et al.
8,629,578 B2 1/2014 Kurs et al.
8,646,228 B2 2/2014 Jenkins
8,656,657 B2 2/2014 Livsey et al.
8,671,630 B2 3/2014 Lena et al.
8,677,702 B2 3/2014 Jenkins
8,695,289 B2 4/2014 Koch et al.
8,713,858 B1 5/2014 Xie
8,713,860 B2 5/2014 Railkar et al.
8,733,038 B2 5/2014 Kalkanoglu et al.
8,776,455 B2 7/2014 Azoulay
8,789,321 B2 7/2014 Ishida
8,793,940 B2 8/2014 Kalkanoglu et al.
8,793,941 B2 8/2014 Bosler et al.
8,826,607 B2 9/2014 Shiao et al.
8,835,751 B2 9/2014 Kalkanoglu et al.
8,863,451 B2 10/2014 Jenkins et al.
8,898,970 B2 12/2014 Jenkins et al.
8,925,262 B2 1/2015 Railkar et al.
8,943,766 B2 2/2015 Gombarick et al.
8,946,544 B2 2/2015 Jabos et al.
8,950,128 B2 2/2015 Kalkanoglu et al.
8,959,848 B2 2/2015 Jenkins et al.
8,966,838 B2 3/2015 Jenkins
8,966,850 B2 3/2015 Jenkins et al.
8,994,224 B2 3/2015 Mehta et al.
9,032,672 B2 5/2015 Livsey et al.
9,153,950 B2 10/2015 Yamanaka et al.
9,166,087 B2 10/2015 Chihlas et al.
9,169,646 B2 10/2015 Rodrigues et al.
9,170,034 B2 10/2015 Bosler et al.
9,178,465 B2 11/2015 Shiao et al.
9,202,955 B2 12/2015 Livsey et al.
9,212,832 B2 12/2015 Jenkins
9,217,584 B2 12/2015 Kalkanoglu et al.
9,270,221 B2 2/2016 Zhao
9,273,885 B2 3/2016 Rordigues et al.
9,276,141 B2 3/2016 Kalkanoglu et al.
9,331,224 B2 5/2016 Koch et al.
9,356,174 B2 5/2016 Duarte et al.
9,359,014 B1 6/2016 Yang et al.
9,412,890 B1 8/2016 Meyers
9,528,270 B2 12/2016 Jenkins et al.
9,605,432 B1 3/2017 Robbins
9,711,672 B2 7/2017 Wang
9,755,573 B2 9/2017 Livsey et al.
9,786,802 B2 10/2017 Shiao et al.
9,831,818 B2 11/2017 West
9,912,284 B2 3/2018 Svec
9,923,515 B2 3/2018 Rodrigues et al.
9,938,729 B2 4/2018 Coon
9,991,412 B2 6/2018 Gonzalez et al.
9,998,067 B2 6/2018 Kalkanoglu et al.
10,027,273 B2 7/2018 West et al.
10,115,850 B2 10/2018 Rodrigues et al.
10,128,660 B1 11/2018 Apte et al.
10,156,075 B1 12/2018 McDonough
10,187,005 B2 1/2019 Rodrigues et al.
10,256,765 B2 4/2019 Rodrigues et al.
10,284,136 B1 5/2019 Mayfield et al.
10,454,408 B2 10/2019 Livsey et al.
10,530,292 B1 1/2020 Cropper et al.
10,560,048 B2 2/2020 Fisher et al.
10,563,406 B2 2/2020 Kalkanoglu et al.
D879,031 S 3/2020 Lance et al.
10,784,813 B2 9/2020 Kalkanoglu et al.
D904,289 S 12/2020 Lance et al.
11,012,026 B2 5/2021 Kalkanoglu et al.
11,177,639 B1 11/2021 Nguyen et al.
11,217,715 B2 1/2022 Sharenko
11,251,744 B1 2/2022 Bunea
11,258,399 B2 2/2022 Kalkanoglu et al.
11,283,394 B2 3/2022 Perkins et al.
11,309,828 B2 4/2022 Sirski et al.
11,394,344 B2 7/2022 Perkins et al.
11,424,379 B2 8/2022 Sharenko et al.
11,431,280 B2 8/2022 Liu et al.
11,431,281 B2 8/2022 Perkins et al.
11,444,569 B2 9/2022 Clemente et al.
11,454,027 B2 9/2022 Kuiper et al.
11,459,757 B2 10/2022 Nguyen et al.
11,486,144 B2 11/2022 Bunea et al.
11,489,482 B2 11/2022 Peterson et al.
11,496,088 B2 11/2022 Sirski et al.
11,508,861 B1 11/2022 Perkins et al.
11,512,480 B1 11/2022 Achor et al.
11,527,665 B2 12/2022 Boitnott
11,545,927 B2 1/2023 Abra et al.
11,545,928 B2 1/2023 Perkins et al.
11,658,470 B2 5/2023 Nguyen et al.
11,661,745 B2 5/2023 Bunea et al.
11,689,149 B2 6/2023 Clemente et al.
11,705,531 B2 7/2023 Sharenko et al.
11,728,759 B2 8/2023 Nguyen et al.
11,732,490 B2 8/2023 Achor et al.
11,811,361 B1 11/2023 Farhangi et al.
11,824,486 B2 11/2023 Nguyen et al.
11,824,487 B2 11/2023 Nguyen et al.
11,843,067 B2 12/2023 Nguyen et al.
2002/0053360 A1 5/2002 Kinoshita et al.
2002/0129849 A1 9/2002 Heckeroth

(56) **References Cited**

U.S. PATENT DOCUMENTS

2003/0101662 A1 6/2003 Ullman
2003/0132265 A1 7/2003 Villela et al.
2003/0217768 A1 11/2003 Guha
2004/0000334 A1 1/2004 Ressler
2005/0030187 A1 2/2005 Peress et al.
2005/0115603 A1 6/2005 Yoshida et al.
2005/0144870 A1 7/2005 Dinwoodie
2005/0178428 A1 8/2005 Laaly et al.
2006/0042683 A1 3/2006 Gangemi
2006/0046084 A1 3/2006 Yang et al.
2007/0074757 A1 4/2007 Mellott et al.
2007/0181174 A1 8/2007 Ressler
2007/0193618 A1 8/2007 Bressler et al.
2007/0249194 A1 10/2007 Liao
2007/0295385 A1 12/2007 Sheats et al.
2008/0006323 A1 1/2008 Kalkanoglu et al.
2008/0035140 A1 2/2008 Placer et al.
2008/0078440 A1 4/2008 Lim et al.
2008/0185748 A1 8/2008 Kalkanoglu
2008/0271774 A1 11/2008 Kalkanoglu et al.
2008/0302030 A1 12/2008 Stancel et al.
2008/0315061 A1 12/2008 Fath
2009/0000222 A1 1/2009 Kalkanoglu et al.
2009/0014058 A1 1/2009 Croft et al.
2009/0019795 A1 1/2009 Szacsvay et al.
2009/0044850 A1 2/2009 Kimberley
2009/0114261 A1 5/2009 Stancel et al.
2009/0133340 A1 5/2009 Shiao et al.
2009/0159118 A1 6/2009 Kalkanoglu et al.
2009/0178350 A1 7/2009 Kalkanoglu et al.
2009/0229652 A1 9/2009 Mapel et al.
2009/0275247 A1 11/2009 Richter et al.
2010/0019580 A1 1/2010 Croft et al.
2010/0095618 A1 4/2010 Edison et al.
2010/0101634 A1 4/2010 Frank et al.
2010/0116325 A1 5/2010 Nikoonahad
2010/0131108 A1 5/2010 Meyer
2010/0139184 A1 6/2010 Williams et al.
2010/0146878 A1 6/2010 Koch et al.
2010/0159221 A1 6/2010 Kourtakis et al.
2010/0170169 A1 7/2010 Railkar et al.
2010/0186798 A1 7/2010 Tormen et al.
2010/0242381 A1 9/2010 Jenkins
2010/0313499 A1 12/2010 Gangemi
2010/0326488 A1 12/2010 Aue et al.
2010/0326501 A1 12/2010 Zhao et al.
2011/0030761 A1 2/2011 Kalkanoglu et al.
2011/0036386 A1 2/2011 Browder
2011/0036389 A1 2/2011 Hardikar et al.
2011/0048507 A1 3/2011 Livsey et al.
2011/0058337 A1 3/2011 Han et al.
2011/0061326 A1 3/2011 Jenkins
2011/0100436 A1 5/2011 Cleereman et al.
2011/0104488 A1 5/2011 Muessig et al.
2011/0132427 A1 6/2011 Kalkanoglu et al.
2011/0168238 A1 7/2011 Metin et al.
2011/0239555 A1 10/2011 Cook et al.
2011/0302859 A1 12/2011 Crasnianski
2012/0034799 A1 2/2012 Hunt
2012/0060902 A1 3/2012 Drake
2012/0085392 A1 4/2012 Albert et al.
2012/0137600 A1 6/2012 Jenkins
2012/0176077 A1 7/2012 Oh et al.
2012/0212065 A1 8/2012 Cheng et al.
2012/0233940 A1 9/2012 Perkins et al.
2012/0240490 A1 9/2012 Gangemi
2012/0260977 A1 10/2012 Stancel
2012/0266942 A1 10/2012 Komatsu et al.
2012/0279150 A1 11/2012 Pislkak et al.
2012/0282437 A1 11/2012 Clark et al.
2012/0291848 A1 11/2012 Sherman et al.
2013/0008499 A1 1/2013 Verger et al.
2013/0014455 A1 1/2013 Grieco
2013/0118558 A1 5/2013 Sherman
2013/0193769 A1 8/2013 Mehta et al.
2013/0247988 A1 9/2013 Reese et al.
2013/0284267 A1 10/2013 Plug et al.
2013/0306137 A1 11/2013 Ko
2014/0090697 A1 4/2014 Rodrigues et al.
2014/0150843 A1 6/2014 Pearce et al.
2014/0173997 A1 6/2014 Jenkins
2014/0179220 A1 6/2014 Railkar et al.
2014/0182222 A1 7/2014 Kalkanoglu et al.
2014/0254776 A1 9/2014 O'Connor et al.
2014/0266289 A1 9/2014 Della Sera et al.
2014/0311556 A1 10/2014 Feng et al.
2014/0352760 A1 12/2014 Haynes et al.
2014/0366464 A1 12/2014 Rodrigues et al.
2015/0089895 A1 4/2015 Leitch
2015/0129013 A1* 5/2015 Nositschka H01L 31/048 438/66
2015/0162459 A1 6/2015 Lu et al.
2015/0340516 A1 11/2015 Kim et al.
2015/0349173 A1 12/2015 Morad et al.
2016/0105144 A1 4/2016 Haynes et al.
2016/0142008 A1 5/2016 Lopez et al.
2016/0254776 A1 9/2016 Rodrigues et al.
2016/0276508 A1 9/2016 Huang et al.
2016/0359451 A1 12/2016 Mao et al.
2017/0159292 A1 6/2017 Chihlas et al.
2017/0179319 A1 6/2017 Yamashita et al.
2017/0179726 A1 6/2017 Garrity et al.
2017/0237390 A1 8/2017 Hudson et al.
2017/0331415 A1 11/2017 Koppi et al.
2018/0094438 A1 4/2018 Wu et al.
2018/0097472 A1 4/2018 Anderson et al.
2018/0115275 A1 4/2018 Flanigan et al.
2018/0254738 A1 9/2018 Yang et al.
2018/0351502 A1 12/2018 Almy et al.
2018/0367089 A1 12/2018 Stutterheim et al.
2019/0030867 A1 1/2019 Sun et al.
2019/0081436 A1 3/2019 Onodi et al.
2019/0123679 A1 4/2019 Rodrigues et al.
2019/0253022 A1 8/2019 Hardar et al.
2019/0305717 A1 10/2019 Allen et al.
2020/0109320 A1 4/2020 Jiang
2020/0144958 A1 5/2020 Rodrigues et al.
2020/0220819 A1 7/2020 Vu et al.
2020/0224419 A1 7/2020 Boss et al.
2020/0343397 A1 10/2020 Hem-Jensen
2021/0115223 A1 4/2021 Bonekamp et al.
2021/0159353 A1 5/2021 Li et al.
2021/0343886 A1 11/2021 Sharenko et al.
2022/0149213 A1 5/2022 Mensink et al.

FOREIGN PATENT DOCUMENTS

CN 202797032 U 3/2013
DE 1958248 A1 11/1971
EP 0 884 432 A2 * 12/1998 ..... H01L 31/048
EP 1039361 A1 9/2000
EP 1837162 A1 9/2007
EP 1774372 A1 7/2011
EP 2446481 A2 5/2012
EP 2784241 A1 10/2014
JP 10046767 A 2/1998
JP 2002-106151 A 4/2002
JP 2001-098703 A 10/2002
JP 2017-027735 A 2/2017
JP 2018053707 A 4/2018
KR 20090084060 A 8/2009
KR 10-2019-0000367 A 1/2019
KR 10-2253483 B1 5/2021
NL 2026856 B1 6/2022
WO 2011/049944 A1 4/2011
WO 2015/133632 A1 9/2015
WO 2018/000589 A1 1/2018
WO 2019/201416 A1 10/2019
WO 2020-159358 A1 8/2020
WO 2021-247098 A1 12/2021

(56) **References Cited**

OTHER PUBLICATIONS

RGS Energy, 3.5kW Powerhouse 3.0 system installed in an afternoon; Jun. 7, 2019 <<facebook.com/RGSEnergy/>> retrieved Feb. 2, 2021.
Tesla, Solar Roof <<tesla.com/solarroof>> retrieved Feb. 2, 2021.
"Types of Roofing Underlayment", Owens Corning Roofing; <<https://www.owenscorning.com/en-us/roofing/tools/how-roofing-underlayment-helps-protect-your-home>> retrieved Nov. 1, 2021.

* cited by examiner

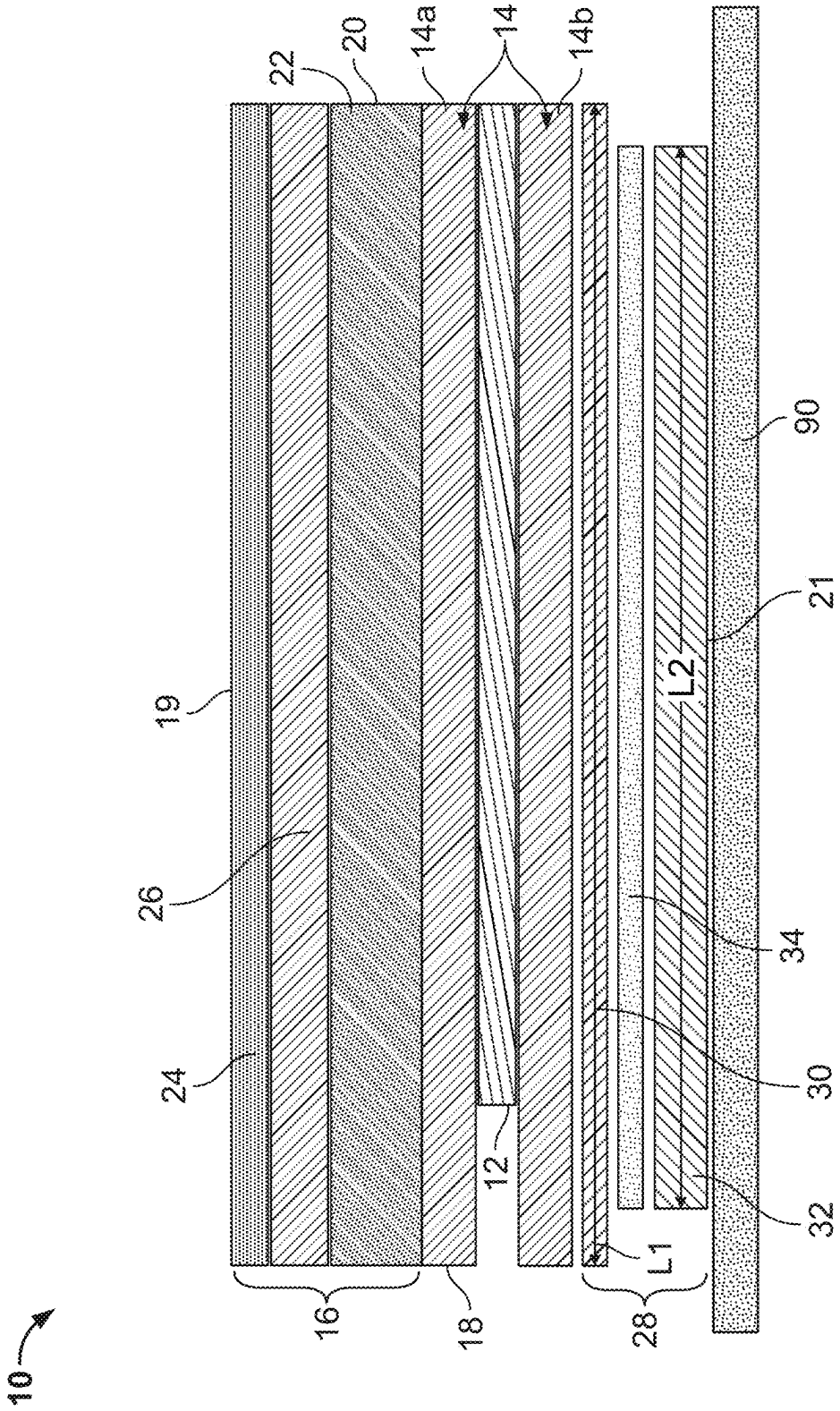

FIG. 1

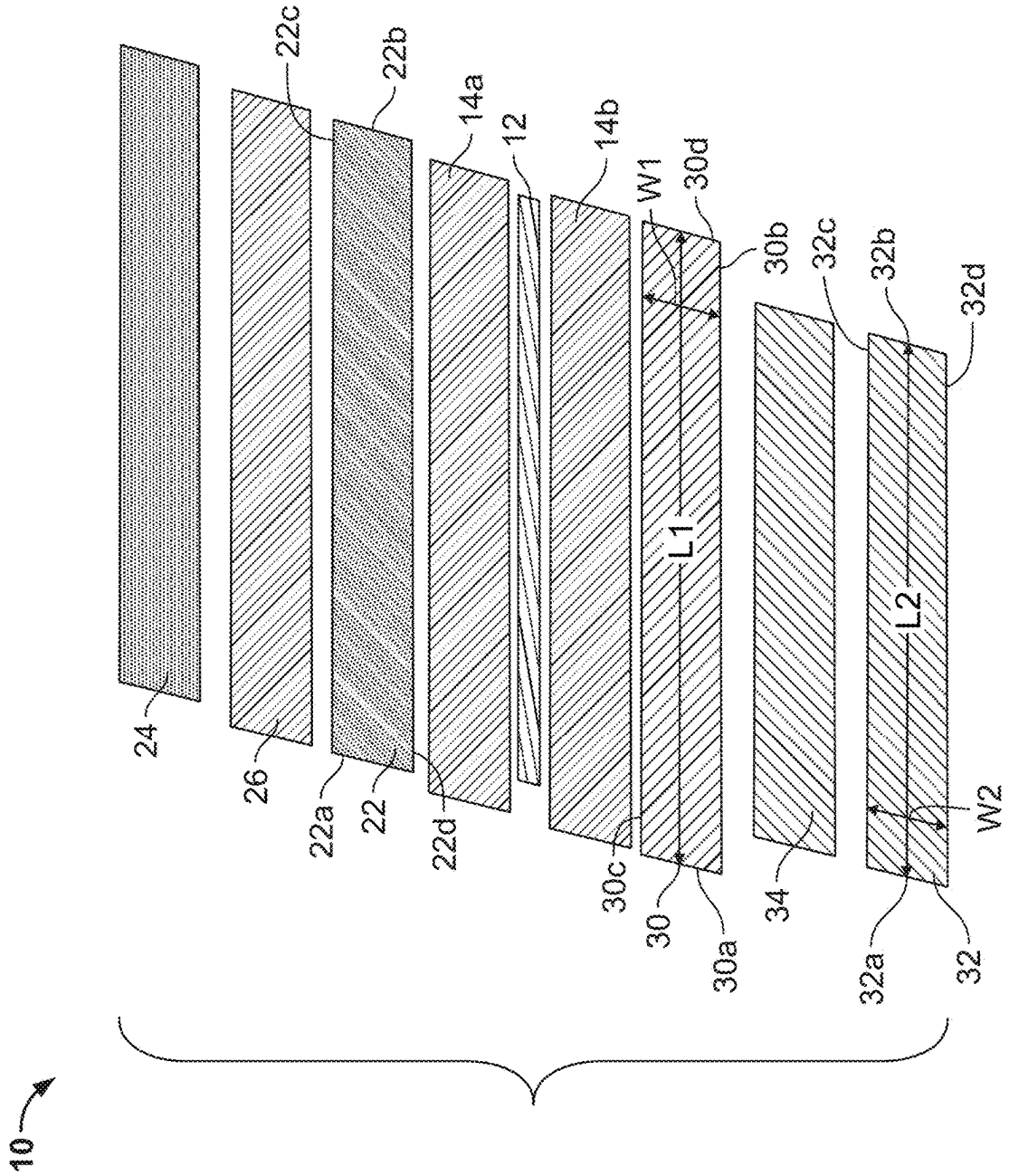
10
24
26
22c
22a
22b
22
22d
14a
12
14b
30c
30
W1
L1
30d
30a
30b
34
32c
32b
L2
32d
W2
32a
32

FIG. 2

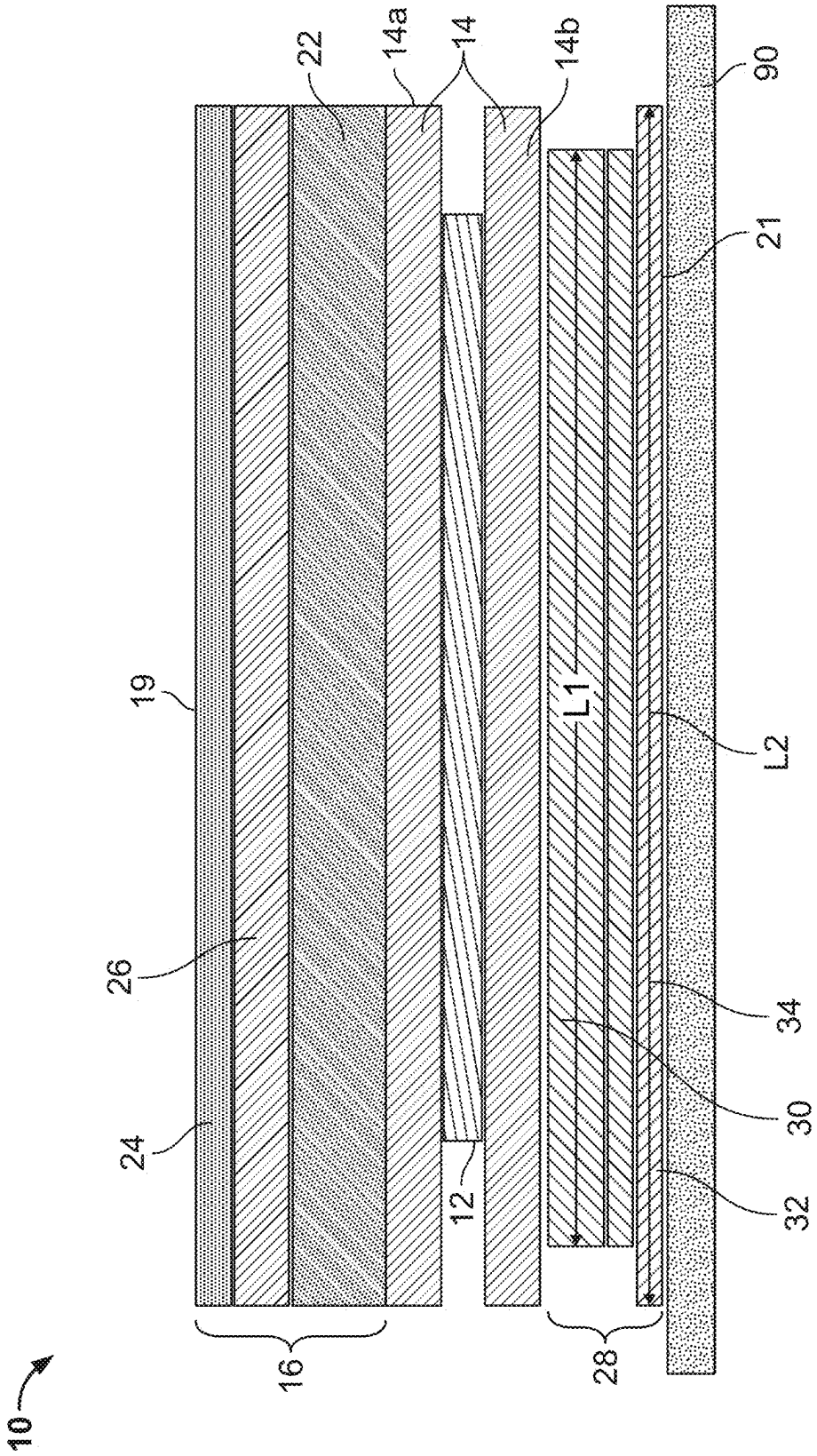

FIG. 3

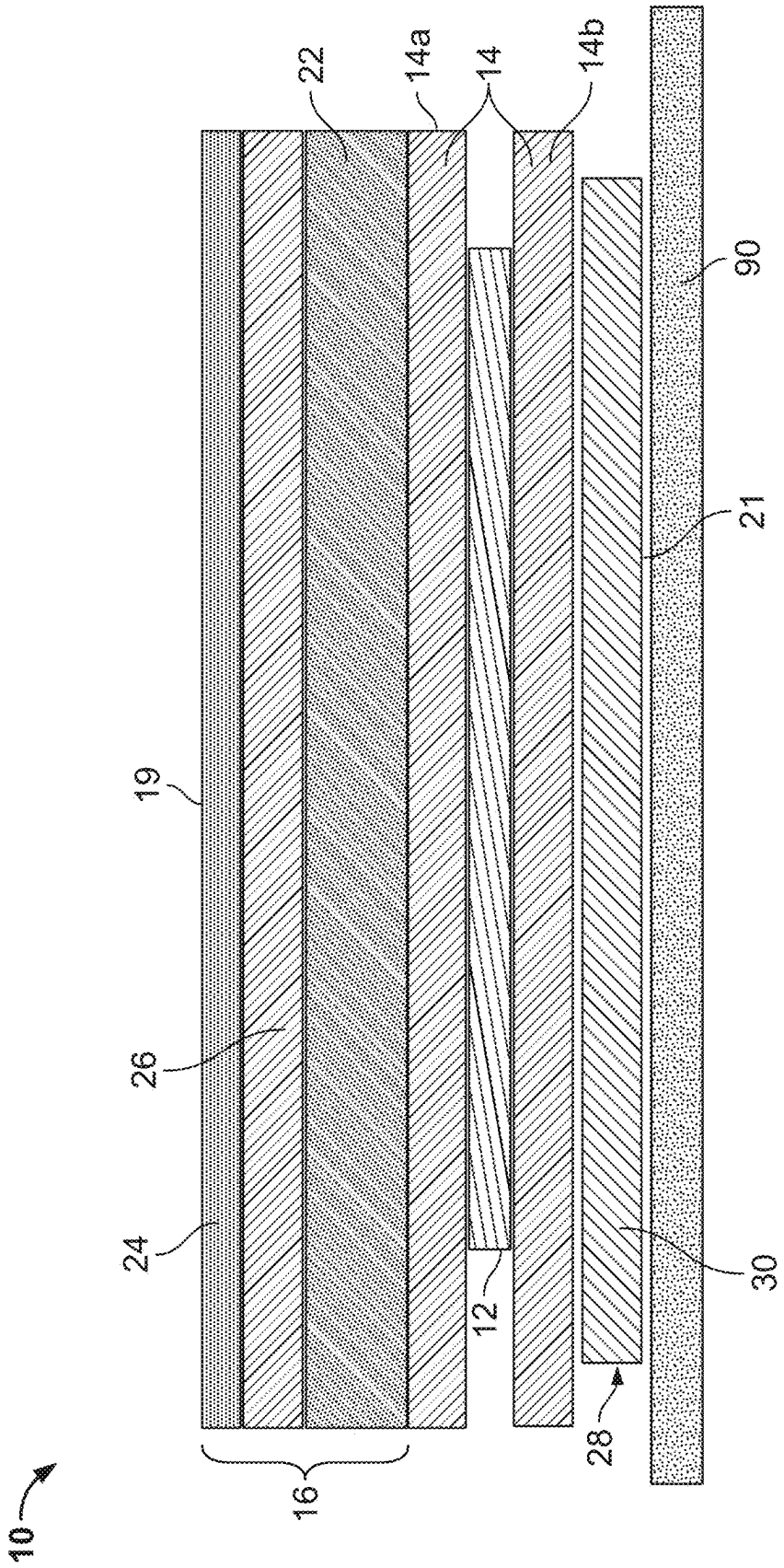

FIG. 4

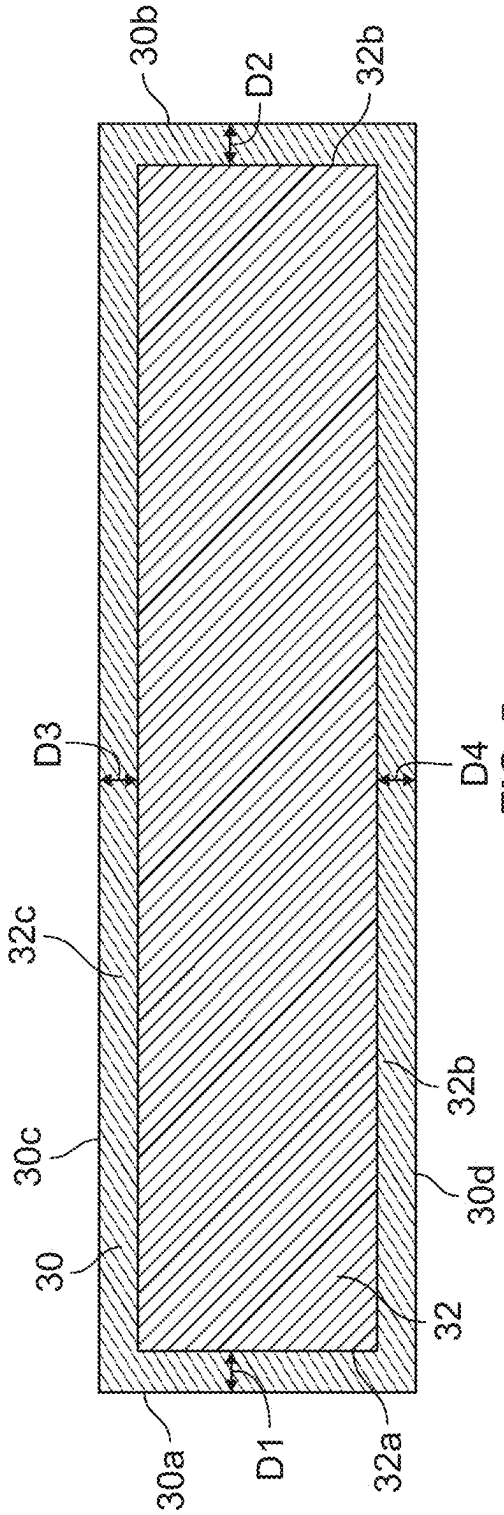

FIG. 5

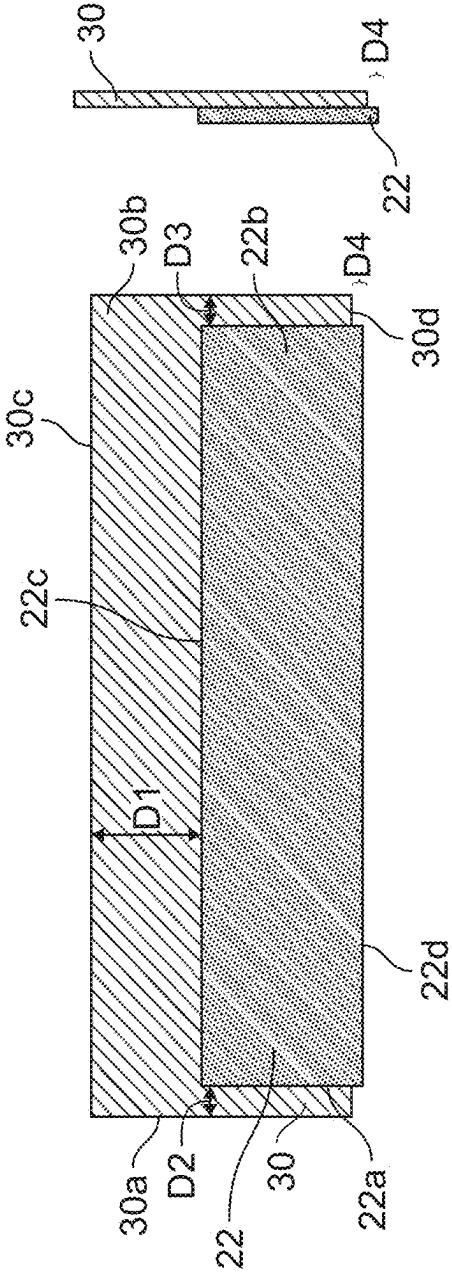

FIG. 6

FIG. 7

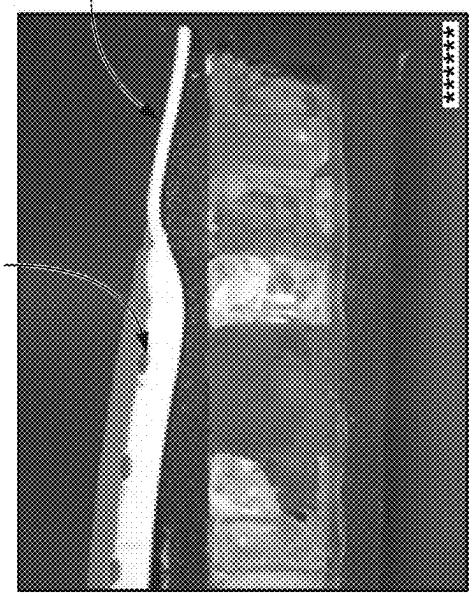

FIG. 9

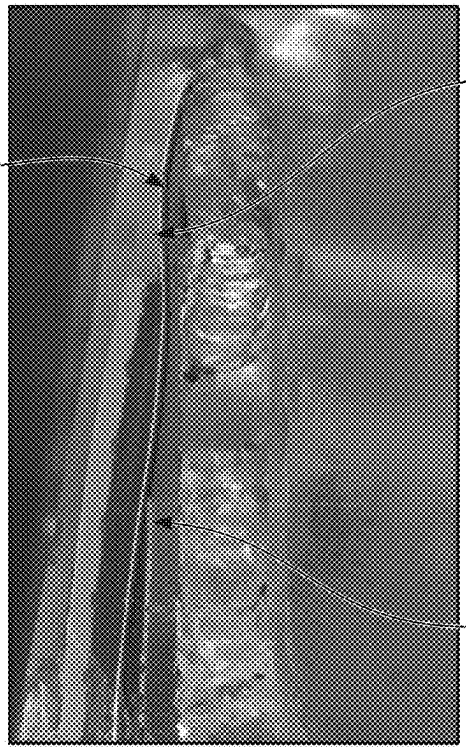

FIG. 8

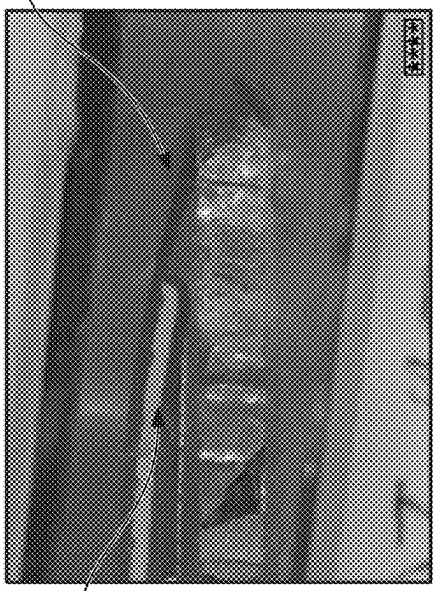

FIG. 10

PHOTOVOLTAIC MODULES WITH OFFSET LAYERS

CROSS-REFERENCE TO RELATED APPLICATION

This application is a Section 111(a) application relating to and claiming the benefit of commonly owned, U.S. Provisional Patent Application Ser. No. 63/401,976, filed Aug. 29, 2022, entitled "PHOTOVOLTAIC MODULES WITH OFFSET LAYERS," the contents of each of which are incorporated herein by reference in its entirety.

FIELD OF THE INVENTION

The present invention relates to photovoltaic modules, and, more particularly, photovoltaic modules having offset layers.

BACKGROUND

Photovoltaic systems having solar panels are commonly installed on roofing of structures.

SUMMARY

In some embodiments, a system comprises a plurality of photovoltaic modules installed on a roof deck, wherein each of the photovoltaic modules includes at least one solar cell, a first encapsulant encapsulating the at least one solar cell, wherein the first encapsulant includes a first surface and a second surface opposite the first surface, a frontsheet juxtaposed with the first surface of the first encapsulant, wherein the frontsheet includes a glass layer, and a backsheet juxtaposed with the second surface of the first encapsulant, wherein the backsheet includes a first layer, wherein the first layer includes a first edge, a second edge opposite the first edge, a third edge extending from the first edge to the second edge, and a fourth edge opposite the third edge and extending from the first edge to the second edge, and a second layer adjacent the first layer, wherein the second layer includes a first edge, a second edge opposite the first edge of the second layer, a third edge extending from the first edge of the second layer to the second edge of the second layer, and a fourth edge opposite the third edge of the second layer and extending from the first edge of the second layer to the second edge of the second layer, wherein the first edge of the first layer is offset from the first edge of the second layer, wherein the second edge of the first layer is offset from the second edge of the second layer, wherein the third edge of the first layer is offset from the third edge of the second layer, and wherein the fourth edge of the first layer is offset from the fourth edge of the second layer.

In some embodiments, a second layer forms a lower surface of the photovoltaic module. In some embodiments, the first layer includes a first length extending from the first edge of the first layer to the second edge of the first layer, wherein the second layer includes a second length extending from the first edge of the second layer to the second edge of the second layer, and wherein the first length is greater than the second length. In some embodiments, the first layer includes a first width extending from the third edge of the first layer to the fourth edge of the first layer, wherein the second layer includes a second width extending from the third edge of the second layer to the fourth edge of the second layer, and wherein the first width is greater than the second width. In some embodiments, the second layer is composed of thermoplastic polyolefin (TPO). In some embodiments, the first layer is composed of a polymer. In some embodiments, the first layer is composed of thermoplastic polyolefin (TPO).

In some embodiments, the glass layer includes a first edge, a second edge opposite the first edge of the glass layer, a third edge extending from the first edge of the glass layer to the second edge of the glass layer, and a fourth edge opposite the third edge of the glass layer and extending from the first edge of the glass layer to the second edge of the glass layer, wherein the first edge of the glass layer is offset from the first edge of the second layer, wherein the second edge of the glass layer is offset from the second edge of the second layer, wherein the third edge of the glass layer is offset from the third edge of the second layer, and wherein the fourth edge of the glass layer is offset from the fourth edge of the second layer.

In some embodiments, the first layer includes a first length extending from the first edge of the first layer to the second edge of the first layer, wherein the second layer includes a second length extending from the first edge of the second layer to the second edge of the second layer, and wherein the second length is greater than the first length. In some embodiments, the first layer includes a first width extending from the third edge of the first layer to the fourth edge of the first layer, wherein the second layer includes a second width extending from the third edge of the second layer to the fourth edge of the second layer, and wherein the second width is greater than the first width.

In some embodiments, first layer is composed of thermoplastic polyolefin (TPO). In some embodiments, the second layer is composed of a polymer. In some embodiments, the second layer is composed of thermoplastic polyolefin (TPO).

In some embodiments, glass layer includes a first edge, a second edge opposite the first edge of the glass layer, a third edge extending from the first edge of the glass layer to the second edge of the glass layer, and a fourth edge opposite the third edge of the glass layer and extending from the first edge of the glass layer to the second edge of the glass layer, wherein the first edge of the glass layer is offset from the first edge of the first layer, wherein the second edge of the glass layer is offset from the second edge of the first layer, wherein the third edge of the glass layer is offset from the third edge of the first layer, and wherein the fourth edge of the glass layer is offset from the fourth edge of the first layer.

In some embodiments, the first edge of the first layer is offset from the first edge of the second layer by a first distance, wherein the second edge of the first layer is offset from the second edge of the second layer by a second distance, wherein the third edge of the first layer is offset from the third edge of the second layer by a third distance, and wherein the fourth edge of the first layer is offset from the fourth edge of the second layer by a fourth distance. In some embodiments, the first distance, the second distance, the third distance and the fourth distance are equal to one another. In some embodiments, the first distance is equal to the second distance, and wherein the third distance is equal to the fourth distance. In some embodiments, the first layer and the second layer are attached to one another by an adhesive layer. In some embodiments, the frontsheet includes a polymer layer and a second encapsulant, and wherein the polymer layer is attached to the glass layer by the second encapsulant.

In some embodiments, a photovoltaic module includes at least one solar cell, a first encapsulant encapsulating the at least one solar cell, wherein the first encapsulant includes a

first surface and a second surface opposite the first surface, a frontsheet juxtaposed with the first surface of the first encapsulant, wherein the frontsheet includes a glass layer, and a backsheet juxtaposed with the second surface of the first encapsulant, wherein the backsheet includes a first layer, wherein the first layer includes a first edge, a second edge opposite the first edge, a third edge extending from the first edge to the second edge, and a fourth edge opposite the third edge and extending from the first edge to the second edge, and a second layer attached to the first layer, wherein the second layer includes a first edge, a second edge opposite the first edge of the second layer, a third edge extending from the first edge of the second layer to the second edge of the second layer, and a fourth edge opposite the third edge of the second layer and extending from the first edge of the second layer to the second edge of the second layer, wherein the first edge of the first layer is offset from the first edge of the second layer, wherein the second edge of the first layer is offset from the second edge of the second layer, wherein the third edge of the first layer is offset from the third edge of the second layer, and wherein the fourth edge of the first layer is offset from the fourth edge of the second layer, wherein the second layer forms a lower surface of the photovoltaic module, and wherein at least one of the first layer and the second layer is composed of thermoplastic polyolefin (TPO).

BRIEF DESCRIPTION OF THE DRAWINGS

FIG. **1** is a schematic view of some embodiments of a photovoltaic module;

FIG. **2** is a perspective, schematic view of some embodiments of a photovoltaic module;

FIGS. **3** and **4** are schematic views of some embodiments of a photovoltaic module;

FIGS. **5** through **7** are schematic views of some embodiments of a photovoltaic module; and

FIGS. **8** through **10** show enlarged views of a portion of some embodiments of a photovoltaic module.

DETAILED DESCRIPTION

The present invention will be further explained with reference to the attached drawings, wherein like structures are referred to by like numerals throughout the several views. The drawings shown are not necessarily to scale, with emphasis instead generally being placed upon illustrating the principles of the present invention. Further, some features may be exaggerated to show details of particular components.

The figures constitute a part of this specification and include illustrative embodiments of the present invention and illustrate various objects and features thereof. Further, the figures are not necessarily to scale, some features may be exaggerated to show details of particular components. In addition, any measurements, specifications and the like shown in the figures are intended to be illustrative, and not restrictive. Therefore, specific structural and functional details disclosed herein are not to be interpreted as limiting, but merely as a representative basis for teaching one skilled in the art to variously employ the present invention.

Among those benefits and improvements that have been disclosed, other objects and advantages of this invention will become apparent from the following description taken in conjunction with the accompanying figures. Detailed embodiments of the present invention are disclosed herein; however, it is to be understood that the disclosed embodiments are merely illustrative of the invention that may be embodied in various forms. In addition, each of the examples given in connection with the various embodiments of the invention which are intended to be illustrative, and not restrictive.

Throughout the specification, the following terms take the meanings explicitly associated herein, unless the context clearly dictates otherwise. The phrases "in one embodiment" and "in some embodiments" as used herein do not necessarily refer to the same embodiment(s), though they may. Furthermore, the phrases "in another embodiment" and "in some other embodiments" as used herein do not necessarily refer to a different embodiment, although they may. Thus, as described below, various embodiments of the invention may be readily combined, without departing from the scope or spirit of the invention.

The term "based on" is not exclusive and allows for being based on additional factors not described, unless the context clearly dictates otherwise. In addition, throughout the specification, the meaning of "a," "an," and "the" include plural references. The meaning of "in" includes "in" and "on."

Referring to FIGS. **1** through **3**, in some embodiments, a photovoltaic module **10** includes at least one solar cell **12**, an encapsulant **14** encapsulating the at least one solar cell **12**, and a frontsheet **16** juxtaposed with the encapsulant **14**. In some embodiments, the frontsheet **16** is juxtaposed with a first surface of the encapsulant **14**. As used herein, the terms "encapsulating" and "encapsulates" mean to partially or fully envelope or enclose, and with respect to certain embodiments of the photovoltaic module **10**, the at least one solar cell **12** is fully enveloped by or enclosed within the encapsulant **14**, or partially enveloped by or enclosed within the encapsulant **14**. In some embodiments, the encapsulant **14** encapsulates 50% to 99.9% of an exterior surface area of the at least one solar cell **12**. In another embodiment, the encapsulant **14** encapsulates 55% to 99.9% of an exterior surface area of the at least one solar cell **12**. In another embodiment, the encapsulant **14** encapsulates 60% to 99.9% of an exterior surface area of the at least one solar cell **12**. In another embodiment, the encapsulant **14** encapsulates 65% to 99.9% of an exterior surface area of the at least one solar cell **12**. In another embodiment, the encapsulant **14** encapsulates 70% to 99.9% of an exterior surface area of the at least one solar cell **12**. In another embodiment, the encapsulant **14** encapsulates 75% to 99.9% of an exterior surface area of the at least one solar cell **12**. In another embodiment, the encapsulant **14** encapsulates 80% to 99.9% of an exterior surface area of the at least one solar cell **12**. In another embodiment, the encapsulant **14** encapsulates 85% to 99.9% of an exterior surface area of the at least one solar cell **12**. In another embodiment, the encapsulant **14** encapsulates 90% to 99.9% of an exterior surface area of the at least one solar cell **12**. In another embodiment, the encapsulant **14** encapsulates 95% to 99.9% of an exterior surface area of the at least one solar cell **12**.

In another embodiment, the encapsulant **14** encapsulates 50% to 95% of an exterior surface area of the at least one solar cell **12**. In another embodiment, the encapsulant **14** encapsulates 55% to 95% of an exterior surface area of the at least one solar cell **12**. In another embodiment, the encapsulant **14** encapsulates 60% to 95% of an exterior surface area of the at least one solar cell **12**. In another embodiment, the encapsulant **14** encapsulates 65% to 95% of an exterior surface area of the at least one solar cell **12**. In another embodiment, the encapsulant **14** encapsulates 70% to 95% of an exterior surface area of the at least one solar cell **12**. In another embodiment, the encapsulant **14**

encapsulates 75% to 95% of an exterior surface area of the at least one solar cell **12**. In another embodiment, the encapsulant **14** encapsulates 80% to 95% of an exterior surface area of the at least one solar cell **12**. In another embodiment, the encapsulant **14** encapsulates 85% to 95% of an exterior surface area of the at least one solar cell **12**. In another embodiment, the encapsulant **14** encapsulates 90% to 95% of an exterior surface area of the at least one solar cell **12**.

In another embodiment, the encapsulant **14** encapsulates 50% to 90% of an exterior surface area of the at least one solar cell **12**. In another embodiment, the encapsulant **14** encapsulates 55% to 90% of an exterior surface area of the at least one solar cell **12**. In another embodiment, the encapsulant **14** encapsulates 60% to 90% of an exterior surface area of the at least one solar cell **12**. In another embodiment, the encapsulant **14** encapsulates 65% to 90% of an exterior surface area of the at least one solar cell **12**. In another embodiment, the encapsulant **14** encapsulates 70% to 90% of an exterior surface area of the at least one solar cell **12**. In another embodiment, the encapsulant **14** encapsulates 75% to 90% of an exterior surface area of the at least one solar cell **12**. In another embodiment, the encapsulant **14** encapsulates 80% to 90% of an exterior surface area of the at least one solar cell **12**. In another embodiment, the encapsulant **14** encapsulates 85% to 90% of an exterior surface area of the at least one solar cell **12**.

In another embodiment, the encapsulant **14** encapsulates 50% to 85% of an exterior surface area of the at least one solar cell **12**. In another embodiment, the encapsulant **14** encapsulates 55% to 85% of an exterior surface area of the at least one solar cell **12**. In another embodiment, the encapsulant **14** encapsulates 60% to 85% of an exterior surface area of the at least one solar cell **12**. In another embodiment, the encapsulant **14** encapsulates 65% to 85% of an exterior surface area of the at least one solar cell **12**. In another embodiment, the encapsulant **14** encapsulates 70% to 85% of an exterior surface area of the at least one solar cell **12**. In another embodiment, the encapsulant **14** encapsulates 75% to 85% of an exterior surface area of the at least one solar cell **12**. In another embodiment, the encapsulant **14** encapsulates 80% to 85% of an exterior surface area of the at least one solar cell **12**.

In another embodiment, the encapsulant **14** encapsulates 50% to 80% of an exterior surface area of the at least one solar cell **12**. In another embodiment, the encapsulant **14** encapsulates 55% to 80% of an exterior surface area of the at least one solar cell **12**. In another embodiment, the encapsulant **14** encapsulates 60% to 80% of an exterior surface area of the at least one solar cell **12**. In another embodiment, the encapsulant **14** encapsulates 65% to 80% of an exterior surface area of the at least one solar cell **12**. In another embodiment, the encapsulant **14** encapsulates 70% to 80% of an exterior surface area of the at least one solar cell **12**. In another embodiment, the encapsulant **14** encapsulates 75% to 80% of an exterior surface area of the at least one solar cell **12**.

In another embodiment, the encapsulant **14** encapsulates 50% to 75% of an exterior surface area of the at least one solar cell **12**. In another embodiment, the encapsulant **14** encapsulates 55% to 75% of an exterior surface area of the at least one solar cell **12**. In another embodiment, the encapsulant **14** encapsulates 60% to 75% of an exterior surface area of the at least one solar cell **12**. In another embodiment, the encapsulant **14** encapsulates 65% to 75% of an exterior surface area of the at least one solar cell **12**. In another embodiment, the encapsulant **14** encapsulates 70% to 75% of an exterior surface area of the at least one solar cell **12**.

In another embodiment, the encapsulant **14** encapsulates 50% to 70% of an exterior surface area of the at least one solar cell **12**. In another embodiment, the encapsulant **14** encapsulates 55% to 70% of an exterior surface area of the at least one solar cell **12**. In another embodiment, the encapsulant **14** encapsulates 60% to 70% of an exterior surface area of the at least one solar cell **12**. In another embodiment, the encapsulant **14** encapsulates 65% to 70% of an exterior surface area of the at least one solar cell **12**.

In another embodiment, the encapsulant **14** encapsulates 50% to 65% of an exterior surface area of the at least one solar cell **12**. In another embodiment, the encapsulant **14** encapsulates 55% to 65% of an exterior surface area of the at least one solar cell **12**. In another embodiment, the encapsulant **14** encapsulates 60% to 65% of an exterior surface area of the at least one solar cell **12**. In another embodiment, the encapsulant **14** encapsulates 50% to 60% of an exterior surface area of the at least one solar cell **12**. In another embodiment, the encapsulant **14** encapsulates 55% to 60% of an exterior surface area of the at least one solar cell **12**. In another embodiment, the encapsulant **14** encapsulates 55% to 60% of an exterior surface area of the at least one solar cell **12**.

In some embodiments, the encapsulant **14** encapsulates 50% of an exterior surface area of the at least one solar cell **12**. In another embodiment, the encapsulant **14** encapsulates 55% of the exterior surface area of the at least one solar cell **12**. In another embodiment, the encapsulant **14** encapsulates 60% of the exterior surface area of the at least one solar cell **12**. In another embodiment, the encapsulant **14** encapsulates 65% of the exterior surface area of the at least one solar cell **12**. In another embodiment, the encapsulant **14** encapsulates 70% of the exterior surface area of the at least one solar cell **12**. In another embodiment, the encapsulant **14** encapsulates 75% of the exterior surface area of the at least one solar cell **12**. In another embodiment, the encapsulant **14** encapsulates 80% of the exterior surface area of the at least one solar cell **12**. In another embodiment, the encapsulant **14** encapsulates 85% of the exterior surface area of the at least one solar cell **12**. In another embodiment, the encapsulant **14** encapsulates 90% of the exterior surface area of the at least one solar cell **12**. In another embodiment, the encapsulant **14** encapsulates 95% of the exterior surface area of the at least one solar cell **12**. In another embodiment, the encapsulant **14** encapsulates 100% of the exterior surface area of the at least one solar cell **12**.

In some embodiments, the encapsulant **14** has a thickness of 0.5 mm to 4 mm. In another embodiment, the encapsulant **14** has a thickness of 0.5 mm to 3.5 mm. In another embodiment, the encapsulant **14** has a thickness of 0.5 mm to 3 mm. In another embodiment, the encapsulant **14** has a thickness of 0.5 mm to 2.5 mm. In another embodiment, the encapsulant **14** has a thickness of 0.5 mm to 2 mm. In another embodiment, the encapsulant **14** has a thickness of 0.5 mm to 1.5 mm. In another embodiment, the encapsulant **14** has a thickness of 0.5 mm to 1 mm.

In some embodiments, the encapsulant **14** has a thickness of 1 mm to 4 mm. In another embodiment, the encapsulant **14** has a thickness of 1 mm to 3.5 mm. In another embodiment, the encapsulant **14** has a thickness of 1 mm to 3 mm. In another embodiment, the encapsulant **14** has a thickness of 1 mm to 2.5 mm. In another embodiment, the encapsulant **14** has a thickness of 1 mm to 2 mm. In another embodiment, the encapsulant **14** has a thickness of 1 mm to 1.5 mm. In

some embodiments, the encapsulant **14** has a thickness of 1.5 mm to 4 mm. In another embodiment, the encapsulant **14** has a thickness of 1.5 mm to 3.5 mm. In another embodiment, the encapsulant **14** has a thickness of 1.5 mm to 3 mm. In another embodiment, the encapsulant **14** has a thickness of 1.5 mm to 2.5 mm. In another embodiment, the encapsulant **14** has a thickness of 1.5 mm to 2 mm.

In some embodiments, the encapsulant **14** has a thickness of 2 mm to 4 mm. In another embodiment, the encapsulant **14** has a thickness of 2 mm to 3.5 mm. In another embodiment, the encapsulant **14** has a thickness of 2 mm to 3 mm. In another embodiment, the encapsulant **14** has a thickness of 2 mm to 2.5 mm. In some embodiments, the encapsulant **14** has a thickness of 2.5 mm to 4 mm. In another embodiment, the encapsulant **14** has a thickness of 2.5 mm to 3.5 mm. In another embodiment, the encapsulant **14** has a thickness of 2.5 mm to 3 mm. In some embodiments, the encapsulant **14** has a thickness of 3 mm to 4 mm. In another embodiment, the encapsulant **14** has a thickness of 3 mm to 3.5 mm. In some embodiments, the encapsulant **14** has a thickness of 3.5 mm to 4 mm.

In some embodiments, the encapsulant **14** has a thickness of 0.5 mm. In some embodiments, the encapsulant **14** has a thickness of 0.6 mm. In some embodiments, the encapsulant **14** has a thickness of 0.7 mm. In some embodiments, the encapsulant **14** has a thickness of 0.8 mm. In some embodiments, the encapsulant **14** has a thickness of 0.9 mm. In some embodiments, the encapsulant **14** has a thickness of 1 mm. In some embodiments, the encapsulant **14** has a thickness of 1.5 mm. In some embodiments, the encapsulant **14** has a thickness of 2 mm. In some embodiments, the encapsulant **14** has a thickness of 2.5 mm. In some embodiments, the encapsulant **14** has a thickness of 3 mm. In some embodiments, the encapsulant **14** has a thickness of 3.5 mm. In some embodiments, the encapsulant **14** has a thickness of 4 mm.

In some embodiments, a first layer **14***a* of the encapsulant **14** has a thickness of 0.2 mm to 2 mm. In some embodiments, the first layer **14***a* of the encapsulant **14** has a thickness of 0.2 mm to 1.5 mm. In some embodiments, the first layer **14***a* of the encapsulant **14** has a thickness of 0.2 mm to 1 mm. In some embodiments, the first layer **14***a* of the encapsulant **14** has a thickness of 0.2 mm to 0.6 mm. In some embodiments, the first layer **14***a* of the encapsulant **14** has a thickness of 0.2 mm to 0.5 mm. In some embodiments, the first layer **14***a* of the encapsulant **14** has a thickness of 0.5 mm to 2 mm. In some embodiments, the first layer **14***a* of the encapsulant **14** has a thickness of 0.5 mm to 1.5 mm. In some embodiments, the first layer **14***a* of the encapsulant **14** has a thickness of 0.5 mm to 1 mm. In some embodiments, the first layer **14***a* of the encapsulant **14** has a thickness of 1 mm to 2 mm. In some embodiments, the first layer **14***a* of the encapsulant **14** has a thickness of 1 mm to 1.5 mm. In some embodiments, the first layer **14***a* of the encapsulant **14** has a thickness of 1.5 mm to 2 mm.

In some embodiments, the first layer **14***a* of the encapsulant **14** has a thickness of 0.2 mm. In some embodiments, the first layer **14***a* of the encapsulant **14** has a thickness of 0.3 mm. In some embodiments, the first layer **14***a* of the encapsulant **14** has a thickness of 0.4 mm. In some embodiments, the first layer **14***a* of the encapsulant **14** has a thickness of 0.45 mm. In some embodiments, the first layer **14***a* of the encapsulant **14** has a thickness of 0.5 mm. In some embodiments, the first layer **14***a* of the encapsulant **14** has a thickness of 0.6 mm. In some embodiments, the first layer **14***a* of the encapsulant **14** has a thickness of 1 mm. In some embodiments, the first layer **14***a* of the encapsulant **14** has a thickness of 1.5 mm. In some embodiments, the first layer **14***a* of the encapsulant **14** has a thickness of 2 mm. In some embodiments, the first layer **14***a* of the encapsulant **14** has a thickness of 2.5 mm. In some embodiments, the first layer **14***a* of the encapsulant **14** has a thickness of 3 mm. In some embodiments, the first layer **14***a* of the encapsulant **14** has a thickness of 3.5 mm. In some embodiments, the first layer **14***a* of the encapsulant **14** has a thickness of 4 mm.

In some embodiments, a second layer **14***b* of the encapsulant **14** has a thickness of 0.2 mm to 2 mm. In some embodiments, the second layer **14***b* of the encapsulant **14** has a thickness of 0.2 mm to 1.5 mm. In some embodiments, the second layer **14***b* of the encapsulant **14** has a thickness of 0.2 mm to 1 mm. In some embodiments, the second layer **14***b* of the encapsulant **14** has a thickness of 0.2 mm to 0.5 mm. In some embodiments, the second layer **14***b* of the encapsulant **14** has a thickness of 0.5 mm to 2 mm. In some embodiments, the second layer **14***b* of the encapsulant **14** has a thickness of 0.5 mm to 1.5 mm. In some embodiments, the second layer **14***b* of the encapsulant **14** has a thickness of 0.5 mm to 1 mm. In some embodiments, the second layer **14***b* of the encapsulant **14** has a thickness of 1 mm to 2 mm. In some embodiments, the second layer **14***b* of the encapsulant **14** has a thickness of 1 mm to 1.5 mm. In some embodiments, the second layer **14***b* of the encapsulant **14** has a thickness of 1.5 mm to 2 mm.

In some embodiments, the second layer **14***b* of the encapsulant **14** has a thickness of 0.2 mm. In some embodiments, the second layer **14***b* of the encapsulant **14** has a thickness of 0.3 mm. In some embodiments, the second layer **14***b* of the encapsulant **14** has a thickness of 0.4 mm. In some embodiments, the second layer **14***b* of the encapsulant **14** has a thickness of 0.45 mm. In some embodiments, the second layer **14***b* of the encapsulant **14** has a thickness of 0.5 mm. In some embodiments, the second layer **14***b* of the encapsulant **14** has a thickness of 1 mm. In some embodiments, the second layer **14***b* of the encapsulant **14** has a thickness of 1.5 mm. In some embodiments, the second layer **14***b* of the encapsulant **14** has a thickness of 2 mm. In some embodiments, the second layer **14***b* of the encapsulant **14** has a thickness of 2.5 mm. In some embodiments, the second layer **14***b* of the encapsulant **14** has a thickness of 3 mm. In some embodiments, the second layer **14***b* of the encapsulant **14** has a thickness of 3.5 mm. In some embodiments, the second layer **14***b* of the encapsulant **14** has a thickness of 4 mm.

In some embodiments, the thickness of the first layer **14***a* is equal to the thickness of the second layer **14***b*. In another embodiment, the thickness of the first layer **14***a* is different from the thickness of the second layer **14***b*.

In some embodiments, the encapsulant **14** may be made from polyolefins, ethyl vinyl acetates, ionomers, silicones, poly vinyl butyral, epoxies, polyurethanes, or combinations/hybrids thereof. In some embodiments, the encapsulant **14** is made from thermosetting polyolefin.

In some embodiments, the photovoltaic module **10** includes a first end **18**, a second end **20** opposite the first end **18**, a first surface **19** extending from the first end **18** to the second end **20**, and a second surface **21** opposite the first surface **19** and extending from the first end **18** to the second end **20**. In some embodiments, the first surface **19** is an upper, sun facing-side surface of the photovoltaic module **10**, and the second surface **21** is a lower surface configured to face a roof deck on which the photovoltaic module **10** is installed on the roof deck. In some embodiments, the polymer layer **24** includes the first surface **19**. In some embodiments, the first surface **19** is textured. In some

embodiments, the first surface **19** is textured to impart an appearance of a traditional asphalt roofing shingle. In some embodiments, the first surface **19** is textured to impart an appearance of and aesthetically match a roofing shingle. In some embodiments, the first surface **19** is an embossed surface. In some embodiments, a pattern on the first surface **19** includes a plurality of indentations. In some embodiment, each of the plurality of indentations has a circular shape. In some embodiment, each of the plurality of indentations has a rectangular shape. In some embodiments, each of the plurality of indentations has a square shape. In some embodiments, each of the plurality of indentations has a triangular shape. In some embodiments, each of the plurality of indentations has an elliptical shape. In some embodiments, each of the plurality of indentations has an oval shape. In some embodiments, each of the plurality of indentations has a rhombus shape. In some embodiments, each of the plurality of indentations has a hexagonal shape. In some embodiments, each of the plurality of indentations includes a pentagonal shape. In some embodiments, each of the plurality of indentations has a polygonal shape. In some embodiments, each of the plurality of indentations has a non-polygonal shape. In some embodiments, each of the plurality of indentations has a geometric shape. In some embodiments, each of the plurality of indentations has a non-geometric shape. In some embodiments, the pattern on the first surface **19** includes a plurality of dimples. In some embodiments, the indentations are created by embossing a portion of the first surface **19**. In some embodiments, the texture includes a surface roughness (Ra). In some embodiments, the surface roughness (Ra) is 1 micron to 200 microns. In some embodiments, the pattern on the first surface **19** includes a plurality of lines. In some embodiments, the pattern on the first surface **19** includes a plurality of grooves. In some embodiments, the pattern on the first surface **19** includes crosshatches.

In some embodiments, the at least one solar cell **12** includes a plurality of the solar cells **12**. In some embodiments, the plurality of solar cells **12** includes two solar cells. In some embodiments, the plurality of solar cells **12** includes three solar cells. In some embodiments, the plurality of solar cells **12** includes four solar cells. In some embodiments, the plurality of solar cells **12** includes five solar cells. In some embodiments, the plurality of solar cells **12** includes six solar cells. In some embodiments, the plurality of solar cells **12** includes seven solar cells. In some embodiments, the plurality of solar cells **12** includes eight solar cells. In some embodiments, the plurality of solar cells **12** includes nine solar cells. In some embodiments, the plurality of solar cells **12** includes ten solar cells. In some embodiments, the plurality of solar cells **12** includes eleven solar cells. In some embodiments, the plurality of solar cells **12** includes twelve solar cells. In some embodiments, the plurality of solar cells **12** includes thirteen solar cells. In some embodiments, the plurality of solar cells **12** includes fourteen solar cells. In some embodiments, the plurality of solar cells **12** includes fifteen solar cells. In some embodiments, the plurality of solar cells **12** includes sixteen solar cells. In some embodiments, the plurality of solar cells **12** includes more than sixteen solar cells.

In some embodiments, the plurality of solar cells **12** is arranged in one row (i.e., one reveal). In another embodiment, the plurality of solar cells **12** is arranged in two rows (i.e., two reveals). In another embodiment, the plurality of solar cells **12** is arranged in three rows (i.e., three reveals). In another embodiment, the plurality of solar cells **12** is arranged in four rows (i.e., four reveals). In another embodiment, the plurality of solar cells **12** is arranged in five rows (i.e., five reveals). In another embodiment, the plurality of solar cells **12** is arranged in six rows (i.e., six reveals). In other embodiments, the plurality of solar cells **12** is arranged in more than six rows. In some embodiments, the at least one solar cell **12** is electrically inactive (i.e., a "dummy" solar cell). In some embodiments, the photovoltaic module **10** does not include the at least one solar cell **12**.

In some embodiments, the frontsheet **16** includes a glass layer **22** and a polymer layer **24** attached to a first surface of the glass layer **22**. In some embodiments, the frontsheet **16** is juxtaposed with the first layer **14***a* of the encapsulant **14**. In some embodiments, each of the encapsulant **14**, the glass layer **22**, and the polymer layer **24** is transparent. In some embodiments, the polymer layer **24** is attached to the glass layer **22** by an first adhesive layer **26**. In some embodiments, the first adhesive layer **26** may include polyvinyl butyrate, acrylic, silicone, or polycarbonate. In another embodiment, the first adhesive layer **26** may include pressure sensitive adhesives. In another embodiment, the polymer layer **24** is attached to the glass layer **22** by thermal bonding. In another embodiment, the frontsheet **16** includes at least one of the glass layer **22** or the polymer layer **24**. In some embodiments, the first adhesive layer **26** is transparent. As used herein, the term "transparent" means having a solar weighted transmittance of 80% or greater, and with respect to certain embodiments of the photovoltaic module **10**, a transparent layer of the photovoltaic module has a solar weighted transmittance of 80% or greater. In another embodiment, the frontsheet **16** does not include the glass layer **22**.

In some embodiments, the glass layer **22** has a thickness of 1 mm to 4 mm. In some embodiments, the glass layer **22** has a thickness of 1 mm to 3.5 mm. In some embodiments, the glass layer **22** has a thickness of 1 mm to 3 mm. In some embodiments, the glass layer **22** has a thickness of 1 mm to 2.5 mm. In some embodiments, the glass layer **22** has a thickness of 1 mm to 2 mm. In some embodiments, the glass layer **22** has a thickness of 1 mm to 1.5 mm. In some embodiments, the glass layer **22** has a thickness of 1.5 mm to 4 mm. In some embodiments, the glass layer **22** has a thickness of 1.5 mm to 3.5 mm. In some embodiments, the glass layer **22** has a thickness of 1.5 mm to 3 mm. In some embodiments, the glass layer **22** has a thickness of 1 mm to 2.5 mm. In some embodiments, the glass layer **22** has a thickness of 1.5 mm to 2 mm.

In some embodiments, the glass layer **22** has a thickness of 2 mm to 4 mm. In some embodiments, the glass layer **22** has a thickness of 2 mm to 3.5 mm. In some embodiments, the glass layer **22** has a thickness of 2 mm to 3 mm. In some embodiments, the glass layer **22** has a thickness of 2 mm to 2.5 mm. In some embodiments, the glass layer **22** has a thickness of 2.5 mm to 4 mm. In some embodiments, the glass layer **22** has a thickness of 2.5 mm to 3.5 mm. In some embodiments, the glass layer **22** has a thickness of 2.5 mm to 3 mm. In some embodiments, the glass layer **22** has a thickness of 3 mm to 4 mm. In some embodiments, the glass layer **22** has a thickness of 3 mm to 3.5 mm. In some embodiments, the glass layer **22** has a thickness of 3.5 mm to 4 mm.

In some embodiments, the glass layer **22** has a thickness of 1 mm. In some embodiments, the glass layer **22** has a thickness of 1.5 mm. In some embodiments, the glass layer **22** has a thickness of 2 mm. In some embodiments, the glass layer **22** has a thickness of 2.5 mm. In some embodiments, the glass layer **22** has a thickness of 3 mm. In some

embodiments, the glass layer **22** has a thickness of 3.5 mm. In some embodiments, the glass layer **22** has a thickness of 4 mm.

In some embodiments, the first adhesive layer **26** is composed of thermosetting polyolefin, thermosetting polyolefin encapsulant material, thermosetting ethylene-vinyl acetate (EVA), EVA encapsulants, thermoplastic olefin, thermoplastic polyolefin (TPO) or hybrids/combinations thereof.

In some embodiments, the first adhesive layer **26** has a thickness of 0.2 mm to 2 mm. In some embodiments, the first adhesive layer **26** has a thickness of 0.2 mm to 1.5 mm. In some embodiments, the first adhesive layer **26** has a thickness of 0.2 mm to 1 mm. In some embodiments, the first adhesive layer **26** has a thickness of 0.2 mm to 0.5 mm. In some embodiments, the first adhesive layer **26** has a thickness of 0.5 mm to 2 mm. In some embodiments, the first adhesive layer **26** has a thickness of 0.5 mm to 1.5 mm. In some embodiments, the first adhesive layer **26** has a thickness of 0.5 mm to 1 mm. In some embodiments, the first adhesive layer **26** has a thickness of 1 mm to 2 mm. In some embodiments, the first adhesive layer **26** has a thickness of 1 mm to 1.5 mm. In some embodiments, the first adhesive layer **26** has a thickness of 1.5 mm to 2 mm.

In some embodiments, the first adhesive layer **26** has a thickness of 0.2 mm. In some embodiments, the first adhesive layer **26** has a thickness of 0.3 mm. In some embodiments, the first adhesive layer **26** has a thickness of 0.4 mm. In some embodiments, the first adhesive layer **26** has a thickness of 0.45 mm. In some embodiments, the first adhesive layer **26** has a thickness of 0.5 mm. In some embodiments, the first adhesive layer **26** has a thickness of 1 mm. In some embodiments, the first adhesive layer **26** has a thickness of 1.5 mm. In some embodiments, the first adhesive layer **26** has a thickness of 2 mm. In some embodiments, the first adhesive layer **26** has a thickness of 2.5 mm. In some embodiments, the first adhesive layer **26** has a thickness of 3 mm. In some embodiments, the first adhesive layer **26** has a thickness of 3.5 mm. In some embodiments, the first adhesive layer **26** has a thickness of 4 mm.

In another embodiment, the first adhesive layer **26** has a thickness of 1 μm to 900 μm. In some embodiments, the first adhesive layer **26** has a thickness of 1 μm to 900 μm. In some embodiments, the first adhesive layer **26** has a thickness of 1 μm to 850 μm. In some embodiments, the first adhesive layer **26** has a thickness of 1 μm to 800 μm. In some embodiments, the first adhesive layer **26** has a thickness of 1 μm to 750 μm. In some embodiments, the first adhesive layer **26** has a thickness of 1 μm to 700 μm. In some embodiments, the first adhesive layer **26** has a thickness of 1 μm to 650 μm. In some embodiments, the first adhesive layer **26** has a thickness of 1 μm to 600 μm. In some embodiments, the first adhesive layer **26** has a thickness of 1 μm to 550 μm. In some embodiments, the first adhesive layer **26** has a thickness of 1 μm to 500 μm. In some embodiments, the first adhesive layer **26** has a thickness of 1 μm to 450 μm. In some embodiments, the first adhesive layer **26** has a thickness of 1 μm to 400 μm. In some embodiments, the first adhesive layer **26** has a thickness of 1 μm to 350 μm. In some embodiments, the first adhesive layer **26** has a thickness of 1 μm to 300 μm. In some embodiments, the first adhesive layer **26** has a thickness of 1 μm to 250 μm. In some embodiments, the first adhesive layer **26** has a thickness of 1 μm to 200 μm. In some embodiments, the first adhesive layer **26** has a thickness of 1 μm to 150 μm. In some embodiments, the first adhesive layer **26** has a thickness of 1 μm to 100 μm. In some embodiments, the first adhesive layer **26** has a thickness of 1 μm to 50 μm.

In some embodiments, the first adhesive layer **26** has a thickness of 50 μm to 900 μm. In some embodiments, the first adhesive layer **26** has a thickness of 50 μm to 850 μm. In some embodiments, the first adhesive layer **26** has a thickness of 50 μm to 800 μm. In some embodiments, the first adhesive layer **26** has a thickness of 50 μm to 750 μm. In some embodiments, the first adhesive layer **26** has a thickness of 50 μm to 700 μm. In some embodiments, the first adhesive layer **26** has a thickness of 50 μm to 650 μm. In some embodiments, the first adhesive layer **26** has a thickness of 50 μm to 600 μm. In some embodiments, the first adhesive layer **26** has a thickness of 50 μm to 550 μm. In some embodiments, the first adhesive layer **26** has a thickness of 50 μm to 500 μm. In some embodiments, the first adhesive layer **26** has a thickness of 50 μm to 450 μm. In some embodiments, the first adhesive layer **26** has a thickness of 50 μm to 400 μm. In some embodiments, the first adhesive layer **26** has a thickness of 50 μm to 350 μm. In some embodiments, the first adhesive layer **26** has a thickness of 50 μm to 300 μm. In some embodiments, the first adhesive layer **26** has a thickness of 50 μm to 250 μm. In some embodiments, the first adhesive layer **26** has a thickness of 50 μm to 200 μm. In some embodiments, the first adhesive layer **26** has a thickness of 50 μm to 150 μm. In some embodiments, the first adhesive layer **26** has a thickness of 50 μm to 100 μm.

In some embodiments, the first adhesive layer **26** has a thickness of 100 μm to 900 μm. In some embodiments, the first adhesive layer **26** has a thickness of 100 μm to 850 μm. In some embodiments, the first adhesive layer **26** has a thickness of 100 μm to 800 μm. In some embodiments, the first adhesive layer **26** has a thickness of 100 μm to 750 μm. In some embodiments, the first adhesive layer **26** has a thickness of 100 μm to 700 μm. In some embodiments, the first adhesive layer **26** has a thickness of 100 μm to 650 μm. In some embodiments, the first adhesive layer **26** has a thickness of 100 μm to 600 μm. In some embodiments, the first adhesive layer **26** has a thickness of 100 μm to 550 μm. In some embodiments, the first adhesive layer **26** has a thickness of 100 μm to 500 μm. In some embodiments, the first adhesive layer **26** has a thickness of 100 μm to 450 μm. In some embodiments, the first adhesive layer **26** has a thickness of 100 μm to 400 μm. In some embodiments, the first adhesive layer **26** has a thickness of 100 μm to 350 μm. In some embodiments, the first adhesive layer **26** has a thickness of 100 μm to 300 μm. In some embodiments, the first adhesive layer **26** has a thickness of 100 μm to 250 μm. In some embodiments, the first adhesive layer **26** has a thickness of 100 μm to 200 μm. In some embodiments, the first adhesive layer **26** has a thickness of 100 μm to 150 μm.

In some embodiments, the first adhesive layer **26** has a thickness of 150 μm to 900 μm. In some embodiments, the first adhesive layer **26** has a thickness of 150 μm to 850 μm. In some embodiments, the first adhesive layer **26** has a thickness of 150 μm to 800 μm. In some embodiments, the first adhesive layer **26** has a thickness of 150 μm to 750 μm. In some embodiments, the first adhesive layer **26** has a thickness of 150 μm to 700 μm. In some embodiments, the first adhesive layer **26** has a thickness of 150 μm to 650 μm. In some embodiments, the first adhesive layer **26** has a thickness of 150 μm to 600 μm. In some embodiments, the first adhesive layer **26** has a thickness of 150 μm to 550 μm. In some embodiments, the first adhesive layer **26** has a thickness of 150 μm to 500 μm. In some embodiments, the

first adhesive layer **26** has a thickness of 150 μm to 450 μm. In some embodiments, the first adhesive layer **26** has a thickness of 150 μm to 400 μm. In some embodiments, the first adhesive layer **26** has a thickness of 150 μm to 350 μm. In some embodiments, the first adhesive layer **26** has a thickness of 150 μm to 300 μm. In some embodiments, the first adhesive layer **26** has a thickness of 150 μm to 250 μm. In some embodiments, the first adhesive layer **26** has a thickness of 150 μm to 200 μm.

In some embodiments, the first adhesive layer **26** has a thickness of 200 μm to 900 μm. In some embodiments, the first adhesive layer **26** has a thickness of 200 μm to 850 μm. In some embodiments, the first adhesive layer **26** has a thickness of 200 μm to 800 μm. In some embodiments, the first adhesive layer **26** has a thickness of 200 μm to 750 μm. In some embodiments, the first adhesive layer **26** has a thickness of 200 μm to 700 μm. In some embodiments, the first adhesive layer **26** has a thickness of 200 μm to 650 μm. In some embodiments, the first adhesive layer **26** has a thickness of 200 μm to 600 μm. In some embodiments, the first adhesive layer **26** has a thickness of 200 μm to 550 μm. In some embodiments, the first adhesive layer **26** has a thickness of 200 μm to 500 μm. In some embodiments, the first adhesive layer **26** has a thickness of 200 μm to 450 μm. In some embodiments, the first adhesive layer **26** has a thickness of 200 μm to 400 μm. In some embodiments, the first adhesive layer **26** has a thickness of 200 μm to 350 μm. In some embodiments, the first adhesive layer **26** has a thickness of 200 μm to 300 μm. In some embodiments, the first adhesive layer **26** has a thickness of 200 μm to 250 μm.

In some embodiments, the first adhesive layer **26** has a thickness of 250 μm to 900 μm. In some embodiments, the first adhesive layer **26** has a thickness of 250 μm to 850 μm. In some embodiments, the first adhesive layer **26** has a thickness of 250 μm to 800 μm. In some embodiments, the first adhesive layer **26** has a thickness of 250 μm to 750 μm. In some embodiments, the first adhesive layer **26** has a thickness of 250 μm to 700 μm. In some embodiments, the first adhesive layer **26** has a thickness of 250 μm to 650 μm. In some embodiments, the first adhesive layer **26** has a thickness of 250 μm to 600 μm. In some embodiments, the first adhesive layer **26** has a thickness of 250 μm to 550 μm. In some embodiments, the first adhesive layer **26** has a thickness of 250 μm to 500 μm. In some embodiments, the first adhesive layer **26** has a thickness of 250 μm to 450 μm. In some embodiments, the first adhesive layer **26** has a thickness of 250 μm to 400 μm. In some embodiments, the first adhesive layer **26** has a thickness of 250 μm to 350 μm. In some embodiments, the first adhesive layer **26** has a thickness of 250 μm to 300 μm.

In some embodiments, the first adhesive layer **26** has a thickness of 300 μm to 900 μm. In some embodiments, the first adhesive layer **26** has a thickness of 300 μm to 850 μm. In some embodiments, the first adhesive layer **26** has a thickness of 300 μm to 800 μm. In some embodiments, the first adhesive layer **26** has a thickness of 300 μm to 750 μm. In some embodiments, the first adhesive layer **26** has a thickness of 300 μm to 700 μm. In some embodiments, the first adhesive layer **26** has a thickness of 300 μm to 650 μm. In some embodiments, the first adhesive layer **26** has a thickness of 300 μm to 600 μm. In some embodiments, the first adhesive layer **26** has a thickness of 300 μm to 550 μm. In some embodiments, the first adhesive layer **26** has a thickness of 300 μm to 500 μm. In some embodiments, the first adhesive layer **26** has a thickness of 300 μm to 450 μm. In some embodiments, the first adhesive layer **26** has a thickness of 300 μm to 400 μm. In some embodiments, the first adhesive layer **26** has a thickness of 300 μm to 350 μm.

In some embodiments, the first adhesive layer **26** has a thickness of 350 μm to 900 μm. In some embodiments, the first adhesive layer **26** has a thickness of 350 μm to 850 μm. In some embodiments, the first adhesive layer **26** has a thickness of 350 μm to 800 μm. In some embodiments, the first adhesive layer **26** has a thickness of 350 μm to 750 μm. In some embodiments, the first adhesive layer **26** has a thickness of 350 μm to 700 μm. In some embodiments, the first adhesive layer **26** has a thickness of 350 μm to 650 μm. In some embodiments, the first adhesive layer **26** has a thickness of 350 μm to 600 μm. In some embodiments, the first adhesive layer **26** has a thickness of 350 μm to 550 μm. In some embodiments, the first adhesive layer **26** has a thickness of 350 μm to 500 μm. In some embodiments, the first adhesive layer **26** has a thickness of 350 μm to 450 μm. In some embodiments, the first adhesive layer **26** has a thickness of 350 μm to 400 μm.

In some embodiments, the first adhesive layer **26** has a thickness of 400 μm to 900 μm. In some embodiments, the first adhesive layer **26** has a thickness of 400 μm to 850 μm. In some embodiments, the first adhesive layer **26** has a thickness of 400 μm to 800 μm. In some embodiments, the first adhesive layer **26** has a thickness of 400 μm to 750 μm. In some embodiments, the first adhesive layer **26** has a thickness of 400 μm to 700 μm. In some embodiments, the first adhesive layer **26** has a thickness of 400 μm to 650 μm. In some embodiments, the first adhesive layer **26** has a thickness of 400 μm to 600 μm. In some embodiments, the first adhesive layer **26** has a thickness of 400 μm to 550 μm. In some embodiments, the first adhesive layer **26** has a thickness of 400 μm to 500 μm. In some embodiments, the first adhesive layer **26** has a thickness of 400 μm to 450 μm.

In some embodiments, the first adhesive layer **26** has a thickness of 450 μm to 900 μm. In some embodiments, the first adhesive layer **26** has a thickness of 450 μm to 850 μm. In some embodiments, the first adhesive layer **26** has a thickness of 450 μm to 800 μm. In some embodiments, the first adhesive layer **26** has a thickness of 450 μm to 750 μm. In some embodiments, the first adhesive layer **26** has a thickness of 450 μm to 700 μm. In some embodiments, the first adhesive layer **26** has a thickness of 450 μm to 650 μm. In some embodiments, the first adhesive layer **26** has a thickness of 450 μm to 600 μm. In some embodiments, the first adhesive layer **26** has a thickness of 450 μm to 550 μm. In some embodiments, the first adhesive layer **26** has a thickness of 450 μm to 500 μm.

In some embodiments, the first adhesive layer **26** has a thickness of 500 μm to 900 μm. In some embodiments, the first adhesive layer **26** has a thickness of 500 μm to 850 μm. In some embodiments, the first adhesive layer **26** has a thickness of 500 μm to 800 μm. In some embodiments, the first adhesive layer **26** has a thickness of 500 μm to 750 μm. In some embodiments, the first adhesive layer **26** has a thickness of 500 μm to 700 μm. In some embodiments, the first adhesive layer **26** has a thickness of 500 μm to 650 μm. In some embodiments, the first adhesive layer **26** has a thickness of 500 μm to 600 μm. In some embodiments, the first adhesive layer **26** has a thickness of 500 μm to 550 μm.

In some embodiments, the first adhesive layer **26** has a thickness of 550 μm to 900 μm. In some embodiments, the first adhesive layer **26** has a thickness of 550 μm to 850 μm. In some embodiments, the first adhesive layer **26** has a thickness of 550 μm to 800 μm. In some embodiments, the first adhesive layer **26** has a thickness of 550 μm to 750 μm. In some embodiments, the first adhesive layer **26** has a

thickness of 550 μm to 700 μm. In some embodiments, the first adhesive layer **26** has a thickness of 550 μm to 650 μm. In some embodiments, the first adhesive layer **26** has a thickness of 550 μm to 600 μm.

In some embodiments, the first adhesive layer **26** has a thickness of 600 μm to 900 μm. In some embodiments, the first adhesive layer **26** has a thickness of 600 μm to 850 μm. In some embodiments, the first adhesive layer **26** has a thickness of 600 μm to 800 μm. In some embodiments, the first adhesive layer **26** has a thickness of 600 μm to 750 μm. In some embodiments, the first adhesive layer **26** has a thickness of 600 μm to 700 μm. In some embodiments, the first adhesive layer **26** has a thickness of 600 μm to 650 μm.

In some embodiments, the first adhesive layer **26** has a thickness of 650 μm to 900 μm. In some embodiments, the first adhesive layer **26** has a thickness of 650 μm to 850 μm. In some embodiments, the first adhesive layer **26** has a thickness of 650 μm to 800 μm. In some embodiments, the first adhesive layer **26** has a thickness of 650 μm to 750 μm. In some embodiments, the first adhesive layer **26** has a thickness of 650 μm to 700 μm. In some embodiments, the first adhesive layer **26** has a thickness of 700 μm to 900 μm. In some embodiments, the first adhesive layer **26** has a thickness of 700 μm to 850 μm. In some embodiments, the first adhesive layer **26** has a thickness of 700 μm to 800 μm. In some embodiments, the first adhesive layer **26** has a thickness of 700 μm to 750 μm. In some embodiments, the first adhesive layer **26** has a thickness of 750 μm to 900 μm. In some embodiments, the first adhesive layer **26** has a thickness of 750 μm to 850 μm. In some embodiments, the first adhesive layer **26** has a thickness of 750 μm to 800 μm. In some embodiments, the first adhesive layer **26** has a thickness of 800 μm to 900 μm. In some embodiments, the first adhesive layer **26** has a thickness of 800 μm to 850 μm. In some embodiments, the first adhesive layer **26** has a thickness of 850 μm to 900 μm.

In some embodiments, the first adhesive layer **26** has a thickness of 1 μm. In some embodiments, the first adhesive layer **26** has a thickness of 50 μm. In some embodiments, the first adhesive layer **26** has a thickness of 100 μm. In some embodiments, the first adhesive layer **26** has a thickness of 1 μm. In some embodiments, the first adhesive layer **26** has a thickness of 150 μm. In some embodiments, the first adhesive layer **26** has a thickness of 200 μm. In some embodiments, the first adhesive layer **26** has a thickness of 250 μm. In some embodiments, the first adhesive layer **26** has a thickness of 300 μm. In some embodiments, the first adhesive layer **26** has a thickness of 350 μm. In some embodiments, the first adhesive layer **26** has a thickness of 400 μm. In some embodiments, the first adhesive layer **26** has a thickness of 450 μm. In some embodiments, the first adhesive layer **26** has a thickness of 500 μm. In some embodiments, the first adhesive layer **26** has a thickness of 550 μm. In some embodiments, the first adhesive layer **26** has a thickness of 600 μm. In some embodiments, the first adhesive layer **26** has a thickness of 650 μm. In some embodiments, the first adhesive layer **26** has a thickness of 700 μm. In some embodiments, the first adhesive layer **26** has a thickness of 750 μm. In some embodiments, the first adhesive layer **26** has a thickness of 800 μm. In some embodiments, the first adhesive layer **26** has a thickness of 850 μm. In some embodiments, the first adhesive layer **26** has a thickness of 900 μm.

In some embodiments, the polymer layer **24** is composed of a fluoropolymer. In certain embodiments, the fluoropolymer may be ethylene tetrafluoroethylene (ETFE), fluoropolymer is polyvinylidene fluoride (PVDF), tetrafluoroethylene-hexafluoropropylene copolymers (FEP), and tetrafluoroethylene-hexafluoropropylene-vinylidene fluoride copolymers (THV), polyvinyl fluoride (PVF), or blends thereof. In some embodiments, the frontsheet is composed of fluoropolymers, acrylics, polyesters, silicones, polycarbonates, or combinations thereof. In other embodiments, the polymer layer **24** is composed of polyethylene terephthalate (PET), polyethylene naphthalate (PEN), polyetheretherketone (PEEK), polyaryletherketone (PAEK), polyarylate (PAR), polyetherimide (PEI), polyarylsulfone (PAS), polyethersulfone (PES), polyamideimide (PAI), polyphenylsulfone (PPSU), polyolefin, cyclic olefin copolymers (CPCs), or polyimide. In some embodiments, the polymer layer **24** is composed of a crosslinked polymeric material. In some embodiments, 50% to 99% of the polymer chains of the polymeric material are crosslinked.

In some embodiments, the polymer layer **24** has a thickness of 0.01 mm to 0.5 mm. In some embodiments, the polymer layer **24** has a thickness of 0.01 mm to 0.45 mm. In some embodiments, the polymer layer **24** has a thickness of 0.01 mm to 0.4 mm. In some embodiments, the polymer layer **24** has a thickness of 0.01 mm to 0.35 mm. In some embodiments, the polymer layer **24** has a thickness of 0.01 mm to 0.3 mm. In some embodiments, the polymer layer **24** has a thickness of 0.01 mm to 0.25 mm. In some embodiments, the polymer layer **24** has a thickness of 0.01 mm to 0.2 mm. In some embodiments, the polymer layer **24** has a thickness of 0.01 mm to 0.15 mm. In some embodiments, the polymer layer **24** has a thickness of 0.01 mm to 0.1 mm. In some embodiments, the polymer layer **24** has a thickness of 0.01 mm to 0.05 mm.

In some embodiments, the polymer layer **24** has a thickness of 0.05 mm to 0.5 mm. In some embodiments, the polymer layer **24** has a thickness of 0.05 mm to 0.45 mm. In some embodiments, the polymer layer **24** has a thickness of 0.05 mm to 0.4 mm. In some embodiments, the polymer layer **24** has a thickness of 0.05 mm to 0.35 mm. In some embodiments, the polymer layer **24** has a thickness of 0.05 mm to 0.3 mm. In some embodiments, the polymer layer **24** has a thickness of 0.05 mm to 0.25 mm. In some embodiments, the polymer layer **24** has a thickness of 0.05 mm to 0.2 mm. In some embodiments, the polymer layer **24** has a thickness of 0.05 mm to 0.15 mm. In some embodiments, the polymer layer **24** has a thickness of 0.05 mm to 0.1 mm.

In some embodiments, the polymer layer **24** has a thickness of 0.1 mm to 0.5 mm. In some embodiments, the polymer layer **24** has a thickness of 0.1 mm to 0.45 mm. In some embodiments, the polymer layer **24** has a thickness of 0.1 mm to 0.4 mm. In some embodiments, the polymer layer **24** has a thickness of 0.1 mm to 0.35 mm. In some embodiments, the polymer layer **24** has a thickness of 0.1 mm to 0.3 mm. In some embodiments, the polymer layer **24** has a thickness of 0.1 mm to 0.25 mm. In some embodiments, the polymer layer **24** has a thickness of 0.1 mm to 0.2 mm. In some embodiments, the polymer layer **24** has a thickness of 0.1 mm to 0.15 mm. In some embodiments, the polymer layer **24** has a thickness of 0.15 mm to 0.5 mm. In some embodiments, the polymer layer **24** has a thickness of 0.15 mm to 0.45 mm. In some embodiments, the polymer layer **24** has a thickness of 0.15 mm to 0.4 mm. In some embodiments, the polymer layer **24** has a thickness of 0.15 mm to 0.35 mm. In some embodiments, the polymer layer **24** has a thickness of 0.15 mm to 0.3 mm. In some embodiments, the polymer layer **24** has a thickness of 0.15 mm to 0.25 mm. In some embodiments, the polymer layer **24** has a thickness of 0.15 mm to 0.2 mm.

In some embodiments, the polymer layer **24** has a thickness of 0.2 mm to 0.5 mm. In some embodiments, the polymer layer **24** has a thickness of 0.2 mm to 0.45 mm. In some embodiments, the polymer layer **24** has a thickness of 0.2 mm to 0.4 mm. In some embodiments, the polymer layer **24** has a thickness of 0.2 mm to 0.35 mm. In some embodiments, the polymer layer **24** has a thickness of 0.2 mm to 0.3 mm. In some embodiments, the polymer layer **24** has a thickness of 0.2 mm to 0.25 mm. In some embodiments, the polymer layer **24** has a thickness of 0.25 mm to 0.5 mm. In some embodiments, the polymer layer **24** has a thickness of 0.25 mm to 0.45 mm. In some embodiments, the polymer layer **24** has a thickness of 0.25 mm to 0.4 mm. In some embodiments, the polymer layer **24** has a thickness of 0.25 mm to 0.35 mm. In some embodiments, the polymer layer **24** has a thickness of 0.25 mm to 0.3 mm.

In some embodiments, the polymer layer **24** has a thickness of 0.3 mm to 0.5 mm. In some embodiments, the polymer layer **24** has a thickness of 0.3 mm to 0.45 mm. In some embodiments, the polymer layer **24** has a thickness of 0.3 mm to 0.4 mm. In some embodiments, the polymer layer **24** has a thickness of 0.3 mm to 0.35 mm. In some embodiments, the polymer layer **24** has a thickness of 0.35 mm to 0.5 mm. In some embodiments, the polymer layer **24** has a thickness of 0.35 mm to 0.45 mm. In some embodiments, the polymer layer **24** has a thickness of 0.35 mm to 0.4 mm. In some embodiments, the polymer layer **24** has a thickness of 0.4 mm to 0.5 mm. In some embodiments, the polymer layer **24** has a thickness of 0.4 mm to 0.45 mm. In some embodiments, the polymer layer **24** has a thickness of 0.45 mm to 0.5 mm.

In some embodiments, the polymer layer **24** has a thickness of 0.01 mm. In some embodiments, the polymer layer **24** has a thickness of 0.05 mm. In some embodiments, the polymer layer **24** has a thickness of 0.1 mm. In some embodiments, the polymer layer **24** has a thickness of 0.15 mm. In some embodiments, the polymer layer **24** has a thickness of 0.2 mm. In some embodiments, the polymer layer **24** has a thickness of 0.25 mm. In some embodiments, the polymer layer **24** has a thickness of 0.3 mm. In some embodiments, the polymer layer **24** has a thickness of 0.35 mm. In some embodiments, the polymer layer **24** has a thickness of 0.4 mm. In some embodiments, the polymer layer **24** has a thickness of 0.45 mm. In some embodiments, the polymer layer **24** has a thickness of 0.5 mm.

In some embodiments, a backsheet **28** is juxtaposed with a second layer **14***b* of the encapsulant **14**. In some embodiments, the backsheet **28** includes a first layer **30**. In some embodiments, the backsheet **28** includes a second layer **32**. In some embodiments, the first layer **30** is juxtaposed with the second layer **14***b* of the encapsulant **14**. In some embodiments, the second layer **32** is juxtaposed with the first layer **30**. In some embodiments, the backsheet **28** only includes the first layer **30** (see FIG. **3**). In some embodiments, the backsheet **28** includes a scrim. In some embodiments, the scrim is located between the first layer **30** and the second layer **32**.

In some embodiments, the first layer **30** of the backsheet **28** is composed of a polymeric material. In some embodiments, the first layer **30** of the backsheet **28** is composed of polyethylene terephthalate ("PET"). In another embodiment, the first layer **30** of the backsheet **28** is composed of ethylene tetrafluoroethylene ("ETFE"). In some embodiments, the first layer **30** of the backsheet **28** is composed of an acrylic such as polymethyl methacrylate ("PMMA"). In some embodiments, the first layer **30** of the backsheet **28** is composed of thermoplastic polyolefin (TPO). In some embodiments, the first layer **30** of the backsheet **28** includes of a single ply TPO roofing membrane. In other embodiments, non-limiting examples of TPO membranes are disclosed in U.S. Pat. No. 9,359,014 to Yang et al., which is incorporated by reference herein in its entirety. In another embodiment, the first layer **30** of the backsheet **28** is composed of polyvinyl chloride. In some embodiments, the first layer **30** of the backsheet **28** is composed of ethylene propylene diene monomer (EPDM) rubber. In some embodiments, the first layer **30** of the backsheet **28** includes a flame retardant additive. In some embodiments, the flame retardant additive may be clays, nanoclays, silicas, carbon black, metal hydroxides such as aluminum hydroxide, metal foils, graphite, and combinations thereof. In some embodiments, the first layer **30** is white in color. In some embodiments, the first layer **30** is white TPO.

In some embodiments, the first layer **30** has a thickness of 0.2 mm to 0.5 mm. In another embodiment, the first layer **30** has a thickness of 0.2 mm to 0.4 mm. In another embodiment, the first layer **30** has a thickness of 0.2 mm to 0.3 mm. In some embodiments, the first layer **30** has a thickness of 0.3 mm to 0.5 mm. In another embodiment, the first layer **30** has a thickness of 0.3 mm to 0.4 mm. In some embodiments, the first layer **30** has a thickness of 0.4 mm to 0.5 mm. In some embodiments, the first layer **30** has a thickness of 0.2 mm. In some embodiments, the first layer **30** has a thickness of 0.3 mm. In some embodiments, the first layer **30** has a thickness of 0.4 mm. In some embodiments, the first layer **30** has a thickness of 0.5 mm.

In some embodiments, the second layer **32** of the backsheet **28** is composed of a polymeric material. In some embodiments, the second layer **32** of the backsheet **28** is composed of thermoplastic polyolefin (TPO). In some embodiments, the second layer **32** of the backsheet **28** includes a single ply TPO roofing membrane. In other embodiments, non-limiting examples of TPO membranes are disclosed in U.S. Pat. No. 9,359,014 to Yang et al., which is incorporated by reference herein in its entirety. In another embodiment, the second layer **32** of the backsheet **28** is composed of polyethylene terephthalate ("PET"). In another embodiment, the second layer **32** is composed of styrene acrylic copolymer. In another embodiment, the second layer **32** of the backsheet **28** is composed of ethylene tetrafluoroethylene ("ETFE"). In some embodiments, the second layer **32** of the backsheet **28** is composed of an acrylic such as polymethyl methacrylate ("PMMA"). In another embodiment, the second layer **32** of the backsheet **28** is composed of polyvinyl chloride. In some embodiments, the second layer **32** of the backsheet **28** is composed of ethylene propylene diene monomer (EPDM) rubber. In some embodiments, the second layer **32** of the backsheet **28** includes a flame retardant additive. In some embodiments, the flame retardant additive may be clays, nanoclays, silicas, carbon black, metal hydroxides such as aluminum hydroxide, metal foils, graphite, and combinations thereof. In some embodiments, the second layer **32** is white in color. In some embodiments, the second layer **32** is white TPO.

In some embodiments, the second layer **32** has a thickness of 1 mm to 5 mm. In some embodiments, the second layer **32** has a thickness of 1 mm to 4 mm. In some embodiments, the second layer **32** has a thickness of 1 mm to 3 mm. In some embodiments, the second layer **32** has a thickness of 1 mm to 2 mm. In some embodiments, the second layer **32** has a thickness of 2 mm to 5 mm. In some embodiments, the second layer **32** has a thickness of 2 mm to 4 mm. In some embodiments, the second layer **32** has a thickness of 2 mm to 3 mm. In some embodiments, the second layer **32** has a

thickness of 3 mm to 5 mm. In some embodiments, the second layer **32** has a thickness of 3 mm to 4 mm. In some embodiments, the second layer **32** has a thickness of 4 mm to 5 mm. In some embodiments, the second layer **32** has a thickness of 1 mm. In some embodiments, the second layer **32** has a thickness of 2 mm. In some embodiments, the second layer **32** has a thickness of 3 mm. In some embodiments, the second layer **32** has a thickness of 4 mm. In some embodiments, the second layer **32** has a thickness of 5 mm.

In some embodiments, the first layer **30** is attached to the second layer **32** by a second adhesive layer **34**. In some embodiments, the second adhesive layer **34** may include polyvinyl butyrate, acrylic, silicone, or polycarbonate. In another embodiment, the second adhesive layer **34** may include pressure sensitive adhesives.

In some embodiments, the second adhesive layer **34** is composed of thermosetting polyolefin, thermosetting polyolefin encapsulant material, thermosetting ethylene-vinyl acetate (EVA), EVA encapsulants, thermoplastic olefin, thermoplastic polyolefin (TPO) or hybrids/combinations thereof.

In some embodiments, the second adhesive layer **34** has a thickness of 0.2 mm to 2 mm. In some embodiments, the second adhesive layer **34** has a thickness of 0.2 mm to 1.5 mm. In some embodiments, the second adhesive layer **34** has a thickness of 0.2 mm to 1 mm. In some embodiments, the second adhesive layer **34** has a thickness of 0.2 mm to 0.5 mm. In some embodiments, the second adhesive layer **34** has a thickness of 0.5 mm to 2 mm. In some embodiments, the second adhesive layer **34** has a thickness of 0.5 mm to 1.5 mm. In some embodiments, the second adhesive layer **34** has a thickness of 0.5 mm to 1 mm. In some embodiments, the second adhesive layer **34** has a thickness of 1 mm to 2 mm. In some embodiments, the second adhesive layer **34** has a thickness of 1 mm to 1.5 mm. In some embodiments, the second adhesive layer **34** has a thickness of 1.5 mm to 2 mm.

In some embodiments, the second adhesive layer **34** has a thickness of 0.2 mm. In some embodiments, the second adhesive layer **34** has a thickness of 0.3 mm. In some embodiments, the second adhesive layer **34** has a thickness of 0.4 mm. In some embodiments, the second adhesive layer **34** has a thickness of 0.45 mm. In some embodiments, the second adhesive layer **34** has a thickness of 0.5 mm. In some embodiments, the second adhesive layer **34** has a thickness of 1 mm. In some embodiments, the second adhesive layer **34** has a thickness of 1.5 mm. In some embodiments, the second adhesive layer **34** has a thickness of 2 mm. In some embodiments, the second adhesive layer **34** has a thickness of 2.5 mm. In some embodiments, the second adhesive layer **34** has a thickness of 3 mm. In some embodiments, the second adhesive layer **34** has a thickness of 3.5 mm. In some embodiments, the second adhesive layer **34** has a thickness of 4 mm.

In another embodiment, the second adhesive layer **34** has a thickness of 1 μm to 900 μm. In some embodiments, the second adhesive layer **34** has a thickness of 1 μm to 900 μm. In some embodiments, the second adhesive layer **34** has a thickness of 1 μm to 850 μm. In some embodiments, the second adhesive layer **34** has a thickness of 1 μm to 800 μm. In some embodiments, the second adhesive layer **34** has a thickness of 1 μm to 750 μm. In some embodiments, the second adhesive layer **34** has a thickness of 1 μm to 700 μm. In some embodiments, the second adhesive layer **34** has a thickness of 1 μm to 650 μm. In some embodiments, the second adhesive layer **34** has a thickness of 1 μm to 600 μm. In some embodiments, the second adhesive layer **34** has a thickness of 1 μm to 550 μm. In some embodiments, the second adhesive layer **34** has a thickness of 1 μm to 500 μm. In some embodiments, the second adhesive layer **34** has a thickness of 1 μm to 450 μm. In some embodiments, the second adhesive layer **34** has a thickness of 1 μm to 400 μm. In some embodiments, the second adhesive layer **34** has a thickness of 1 μm to 350 μm. In some embodiments, the second adhesive layer **34** has a thickness of 1 μm to 300 μm. In some embodiments, the second adhesive layer **34** has a thickness of 1 μm to 250 μm. In some embodiments, the second adhesive layer **34** has a thickness of 1 μm to 200 μm. In some embodiments, the second adhesive layer **34** has a thickness of 1 μm to 150 μm. In some embodiments, the second adhesive layer **34** has a thickness of 1 μm to 100 μm. In some embodiments, the second adhesive layer **34** has a thickness of 1 μm to 50 μm.

In some embodiments, the second adhesive layer **34** has a thickness of 50 μm to 900 μm. In some embodiments, the second adhesive layer **34** has a thickness of 50 μm to 850 μm. In some embodiments, the second adhesive layer **34** has a thickness of 50 μm to 800 μm. In some embodiments, the second adhesive layer **34** has a thickness of 50 μm to 750 μm. In some embodiments, the second adhesive layer **34** has a thickness of 50 μm to 700 μm. In some embodiments, the second adhesive layer **34** has a thickness of 50 μm to 650 μm. In some embodiments, the second adhesive layer **34** has a thickness of 50 μm to 600 μm. In some embodiments, the second adhesive layer **34** has a thickness of 50 μm to 550 μm. In some embodiments, the second adhesive layer **34** has a thickness of 50 μm to 500 μm. In some embodiments, the second adhesive layer **34** has a thickness of 50 μm to 450 μm. In some embodiments, the second adhesive layer **34** has a thickness of 50 μm to 400 μm. In some embodiments, the second adhesive layer **34** has a thickness of 50 μm to 350 μm. In some embodiments, the second adhesive layer **34** has a thickness of 50 μm to 300 μm. In some embodiments, the second adhesive layer **34** has a thickness of 50 μm to 250 μm. In some embodiments, the second adhesive layer **34** has a thickness of 50 μm to 200 μm. In some embodiments, the second adhesive layer **34** has a thickness of 50 μm to 150 μm. In some embodiments, the second adhesive layer **34** has a thickness of 50 μm to 100 μm.

In some embodiments, the second adhesive layer **34** has a thickness of 100 μm to 900 μm. In some embodiments, the second adhesive layer **34** has a thickness of 100 μm to 850 μm. In some embodiments, the second adhesive layer **34** has a thickness of 100 μm to 800 μm. In some embodiments, the second adhesive layer **34** has a thickness of 100 μm to 750 μm. In some embodiments, the second adhesive layer **34** has a thickness of 100 μm to 700 μm. In some embodiments, the second adhesive layer **34** has a thickness of 100 μm to 650 μm. In some embodiments, the second adhesive layer **34** has a thickness of 100 μm to 600 μm. In some embodiments, the second adhesive layer **34** has a thickness of 100 μm to 550 μm. In some embodiments, the second adhesive layer **34** has a thickness of 100 μm to 500 μm. In some embodiments, the second adhesive layer **34** has a thickness of 100 μm to 450 μm. In some embodiments, the second adhesive layer **34** has a thickness of 100 μm to 400 μm. In some embodiments, the second adhesive layer **34** has a thickness of 100 μm to 350 μm. In some embodiments, the second adhesive layer **34** has a thickness of 100 μm to 300 μm. In some embodiments, the second adhesive layer **34** has a thickness of 100 μm to 250 μm. In some embodiments, the second adhesive layer **34** has a thickness of 100 μm to 200 μm. In some embodiments, the second adhesive layer **34** has a thickness of 100 μm to 150 μm.

In some embodiments, the second adhesive layer **34** has a thickness of 150 μm to 900 μm. In some embodiments, the second adhesive layer **34** has a thickness of 150 μm to 850 μm. In some embodiments, the second adhesive layer **34** has a thickness of 150 μm to 800 μm. In some embodiments, the second adhesive layer **34** has a thickness of 150 μm to 750 μm. In some embodiments, the second adhesive layer **34** has a thickness of 150 μm to 700 μm. In some embodiments, the second adhesive layer **34** has a thickness of 150 μm to 650 μm. In some embodiments, the second adhesive layer **34** has a thickness of 150 μm to 600 μm. In some embodiments, the second adhesive layer **34** has a thickness of 150 μm to 550 μm. In some embodiments, the second adhesive layer **34** has a thickness of 150 μm to 500 μm. In some embodiments, the second adhesive layer **34** has a thickness of 150 μm to 450 μm. In some embodiments, the second adhesive layer **34** has a thickness of 150 μm to 400 μm. In some embodiments, the second adhesive layer **34** has a thickness of 150 μm to 350 μm. In some embodiments, the second adhesive layer **34** has a thickness of 150 μm to 300 μm. In some embodiments, the second adhesive layer **34** has a thickness of 150 μm to 250 μm. In some embodiments, the second adhesive layer **34** has a thickness of 150 μm to 200 μm.

In some embodiments, the second adhesive layer **34** has a thickness of 200 μm to 900 μm. In some embodiments, the second adhesive layer **34** has a thickness of 200 μm to 850 μm. In some embodiments, the second adhesive layer **34** has a thickness of 200 μm to 800 μm. In some embodiments, the second adhesive layer **34** has a thickness of 200 μm to 750 μm. In some embodiments, the second adhesive layer **34** has a thickness of 200 μm to 700 μm. In some embodiments, the second adhesive layer **34** has a thickness of 200 μm to 650 μm. In some embodiments, the second adhesive layer **34** has a thickness of 200 μm to 600 μm. In some embodiments, the second adhesive layer **34** has a thickness of 200 μm to 550 μm. In some embodiments, the second adhesive layer **34** has a thickness of 200 μm to 500 μm. In some embodiments, the second adhesive layer **34** has a thickness of 200 μm to 450 μm. In some embodiments, the second adhesive layer **34** has a thickness of 200 μm to 400 μm. In some embodiments, the second adhesive layer **34** has a thickness of 200 μm to 350 μm. In some embodiments, the second adhesive layer **34** has a thickness of 200 μm to 300 μm. In some embodiments, the second adhesive layer **34** has a thickness of 200 μm to 250 μm.

In some embodiments, the second adhesive layer **34** has a thickness of 250 μm to 900 μm. In some embodiments, the second adhesive layer **34** has a thickness of 250 μm to 850 μm. In some embodiments, the second adhesive layer **34** has a thickness of 250 μm to 800 μm. In some embodiments, the second adhesive layer **34** has a thickness of 250 μm to 750 μm. In some embodiments, the second adhesive layer **34** has a thickness of 250 μm to 700 μm. In some embodiments, the second adhesive layer **34** has a thickness of 250 μm to 650 μm. In some embodiments, the second adhesive layer **34** has a thickness of 250 μm to 600 μm. In some embodiments, the second adhesive layer **34** has a thickness of 250 μm to 550 μm. In some embodiments, the second adhesive layer **34** has a thickness of 250 μm to 500 μm. In some embodiments, the second adhesive layer **34** has a thickness of 250 μm to 450 μm. In some embodiments, the second adhesive layer **34** has a thickness of 250 μm to 400 μm. In some embodiments, the second adhesive layer **34** has a thickness of 250 μm to 350 μm. In some embodiments, the second adhesive layer **34** has a thickness of 250 μm to 300 μm.

In some embodiments, the second adhesive layer **34** has a thickness of 300 μm to 900 μm. In some embodiments, the second adhesive layer **34** has a thickness of 300 μm to 850 μm. In some embodiments, the second adhesive layer **34** has a thickness of 300 μm to 800 μm. In some embodiments, the second adhesive layer **34** has a thickness of 300 μm to 750 μm. In some embodiments, the second adhesive layer **34** has a thickness of 300 μm to 700 μm. In some embodiments, the second adhesive layer **34** has a thickness of 300 μm to 650 μm. In some embodiments, the second adhesive layer **34** has a thickness of 300 μm to 600 μm. In some embodiments, the second adhesive layer **34** has a thickness of 300 μm to 550 μm. In some embodiments, the second adhesive layer **34** has a thickness of 300 μm to 500 μm. In some embodiments, the second adhesive layer **34** has a thickness of 300 μm to 450 μm. In some embodiments, the second adhesive layer **34** has a thickness of 300 μm to 400 μm. In some embodiments, the second adhesive layer **34** has a thickness of 300 μm to 350 μm.

In some embodiments, the second adhesive layer **34** has a thickness of 350 μm to 900 μm. In some embodiments, the second adhesive layer **34** has a thickness of 350 μm to 850 μm. In some embodiments, the second adhesive layer **34** has a thickness of 350 μm to 800 μm. In some embodiments, the second adhesive layer **34** has a thickness of 350 μm to 750 μm. In some embodiments, the second adhesive layer **34** has a thickness of 350 μm to 700 μm. In some embodiments, the second adhesive layer **34** has a thickness of 350 μm to 650 μm. In some embodiments, the second adhesive layer **34** has a thickness of 350 μm to 600 μm. In some embodiments, the second adhesive layer **34** has a thickness of 350 μm to 550 μm. In some embodiments, the second adhesive layer **34** has a thickness of 350 μm to 500 μm. In some embodiments, the second adhesive layer **34** has a thickness of 350 μm to 450 μm. In some embodiments, the second adhesive layer **34** has a thickness of 350 μm to 400 μm.

In some embodiments, the second adhesive layer **34** has a thickness of 400 μm to 900 μm. In some embodiments, the second adhesive layer **34** has a thickness of 400 μm to 850 μm. In some embodiments, the second adhesive layer **34** has a thickness of 400 μm to 800 μm. In some embodiments, the second adhesive layer **34** has a thickness of 400 μm to 750 μm. In some embodiments, the second adhesive layer **34** has a thickness of 400 μm to 700 μm. In some embodiments, the second adhesive layer **34** has a thickness of 400 μm to 650 μm. In some embodiments, the second adhesive layer **34** has a thickness of 400 μm to 600 μm. In some embodiments, the second adhesive layer **34** has a thickness of 400 μm to 550 μm. In some embodiments, the second adhesive layer **34** has a thickness of 400 μm to 500 μm. In some embodiments, the second adhesive layer **34** has a thickness of 400 μm to 450 μm.

In some embodiments, the second adhesive layer **34** has a thickness of 450 μm to 900 μm. In some embodiments, the second adhesive layer **34** has a thickness of 450 μm to 850 μm. In some embodiments, the second adhesive layer **34** has a thickness of 450 μm to 800 μm. In some embodiments, the second adhesive layer **34** has a thickness of 450 μm to 750 μm. In some embodiments, the second adhesive layer **34** has a thickness of 450 μm to 700 μm. In some embodiments, the second adhesive layer **34** has a thickness of 450 μm to 650 μm. In some embodiments, the second adhesive layer **34** has a thickness of 450 μm to 600 μm. In some embodiments, the second adhesive layer **34** has a thickness of 450 μm to 550 μm. In some embodiments, the second adhesive layer **34** has a thickness of 450 μm to 500 μm.

In some embodiments, the second adhesive layer **34** has a thickness of 500 μm to 900 μm. In some embodiments, the second adhesive layer **34** has a thickness of 500 μm to 850

μm. In some embodiments, the second adhesive layer **34** has a thickness of 500 μm to 800 μm. In some embodiments, the second adhesive layer **34** has a thickness of 500 μm to 750 μm. In some embodiments, the second adhesive layer **34** has a thickness of 500 μm to 700 μm. In some embodiments, the second adhesive layer **34** has a thickness of 500 μm to 650 μm. In some embodiments, the second adhesive layer **34** has a thickness of 500 μm to 600 μm. In some embodiments, the second adhesive layer **34** has a thickness of 500 μm to 550 μm.

In some embodiments, the second adhesive layer **34** has a thickness of 550 μm to 900 μm. In some embodiments, the second adhesive layer **34** has a thickness of 550 μm to 850 μm. In some embodiments, the second adhesive layer **34** has a thickness of 550 μm to 800 μm. In some embodiments, the second adhesive layer **34** has a thickness of 550 μm to 750 μm. In some embodiments, the second adhesive layer **34** has a thickness of 550 μm to 700 μm. In some embodiments, the second adhesive layer **34** has a thickness of 550 μm to 650 μm. In some embodiments, the second adhesive layer **34** has a thickness of 550 μm to 600 μm.

In some embodiments, the second adhesive layer **34** has a thickness of 600 μm to 900 μm. In some embodiments, the second adhesive layer **34** has a thickness of 600 μm to 850 μm. In some embodiments, the second adhesive layer **34** has a thickness of 600 μm to 800 μm. In some embodiments, the second adhesive layer **34** has a thickness of 600 μm to 750 μm. In some embodiments, the second adhesive layer **34** has a thickness of 600 μm to 700 μm. In some embodiments, the second adhesive layer **34** has a thickness of 600 μm to 650 μm.

In some embodiments, the second adhesive layer **34** has a thickness of 650 μm to 900 μm. In some embodiments, the second adhesive layer **34** has a thickness of 650 μm to 850 μm. In some embodiments, the second adhesive layer **34** has a thickness of 650 μm to 800 μm. In some embodiments, the second adhesive layer **34** has a thickness of 650 μm to 750 μm. In some embodiments, the second adhesive layer **34** has a thickness of 650 μm to 700 μm. In some embodiments, the second adhesive layer **34** has a thickness of 700 μm to 900 μm. In some embodiments, the second adhesive layer **34** has a thickness of 700 μm to 850 μm. In some embodiments, the second adhesive layer **34** has a thickness of 700 μm to 800 μm. In some embodiments, the second adhesive layer **34** has a thickness of 700 μm to 750 μm. In some embodiments, the second adhesive layer **34** has a thickness of 750 μm to 900 μm. In some embodiments, the second adhesive layer **34** has a thickness of 750 μm to 850 μm. In some embodiments, the second adhesive layer **34** has a thickness of 750 μm to 800 μm. In some embodiments, the second adhesive layer **34** has a thickness of 800 μm to 900 μm. In some embodiments, the second adhesive layer **34** has a thickness of 800 μm to 850 μm. In some embodiments, the second adhesive layer **34** has a thickness of 850 μm to 900 μm.

In some embodiments, the second adhesive layer **34** has a thickness of 1 μm. In some embodiments, the second adhesive layer **34** has a thickness of 50 μm. In some embodiments, the second adhesive layer **34** has a thickness of 100 μm. In some embodiments, the second adhesive layer **34** has a thickness of 1 μm. In some embodiments, the second adhesive layer **34** has a thickness of 150 μm. In some embodiments, the second adhesive layer **34** has a thickness of 200 μm. In some embodiments, the second adhesive layer **34** has a thickness of 250 μm. In some embodiments, the second adhesive layer **34** has a thickness of 300 μm. In some embodiments, the second adhesive layer **34** has a thickness of 350 μm. In some embodiments, the second adhesive layer **34** has a thickness of 400 μm. In some embodiments, the second adhesive layer **34** has a thickness of 450 μm. In some embodiments, the second adhesive layer **34** has a thickness of 500 μm. In some embodiments, the second adhesive layer **34** has a thickness of 550 μm. In some embodiments, the second adhesive layer **34** has a thickness of 600 μm. In some embodiments, the second adhesive layer **34** has a thickness of 650 μm. In some embodiments, the second adhesive layer **34** has a thickness of 700 μm. In some embodiments, the second adhesive layer **34** has a thickness of 750 μm. In some embodiments, the second adhesive layer **34** has a thickness of 800 μm. In some embodiments, the second adhesive layer **34** has a thickness of 850 μm. In some embodiments, the second adhesive layer **34** has a thickness of 900 μm.

In some embodiments, the first layer **30** and the second layer **32** are welded to one another. In some embodiments, the first layer **30** and the second layer **32** are ultrasonically welded to one another. In some embodiments, the first layer **30** and the second layer **32** are heat welded to one another. In some embodiments, the first layer **30** and the second layer **32** are thermally bonded to one another. In some embodiments, the first layer **30** and the second layer **32** are adhered to one another by an adhesive. In some embodiments, the first layer **30** and the second layer **32** are laminated. In some embodiments, the first layer **30** and the second layer **32** are co-extruded. In some embodiments, the first layer **30** and the second layer **32** are mechanically attached to one another.

In some embodiments, the first layer **30** includes a first edge **30***a*, a second edge **30***b* opposite the first edge **30***a*, a third edge **30***c* extending from the first edge **30***a* to the second edge **30***b*, and a fourth edge **30***d* opposite the third edge **30***c* and extending from the first edge **30***a* to the second edge **30***b*. In some embodiments, the second layer **32** includes a first edge **32***a*, a second edge **32***b* opposite the first edge **32***a*, a third edge **32***c* extending from the first edge **32***a* to the second edge **32***b*, and a fourth edge **32***d* opposite the third edge **32***c* and extending from the first edge **32***a* to the second edge **32***b*.

In some embodiments, the first edge **30***a* of the first layer **30** is offset from the first edge **32***a* of the second layer **32**. In some embodiments, the second edge **30***b* of the first layer **30** is offset from the second edge **32***b* of the second layer **32**. In some embodiments, the third edge **30***c* of the first layer **30** is offset from the third edge **32***c* of the second layer **32**. In some embodiments, the fourth edge **30***d* of the first layer **30** is offset from the fourth edge **32***d* of the second layer **32**.

In some embodiments, at least one of the first, second, third and fourth edges **30***a*, **30***b*, **30***c*, **30***d* of the first layer **30** is offset from the corresponding first, second, third and fourth edges **32***a*, **32***b*, **32***c*, **32***d* of the second layer **32**. In some embodiments, at least two of the first, second, third and fourth edges **30***a*, **30***b*, **30***c*, **30***d* of the first layer **30** is offset from the corresponding first, second, third and fourth edges **32***a*, **32***b*, **32***c*, **32***d* of the second layer **32**. In some embodiments, at least three of the first, second, third and fourth edges **30***a*, **30***b*, **30***c*, **30***d* of the first layer **30** is offset from the corresponding first, second, third and fourth edges **32***a*, **32***b*, **32***c*, **32***d* of the second layer **32**. In some embodiments, each of the first, second, third and fourth edges **30***a*, **30***b*, **30***c*, **30***d* of the first layer **30** is offset from the corresponding first, second, third and fourth edges **32***a*, **32***b*, **32***c*, **32***d* of the second layer **32**.

In some embodiments, at least one of the first, second, third and fourth edges **30***a*, **30***b*, **30***c*, **30***d* of the first layer **30** is offset from the corresponding first, second, third and fourth edges **32***a*, **32***b*, **32***c*, **32***d* of the second layer **32**, while the remaining ones of the first, second, third and fourth

edges **30***a*, **30***b*, **30***c*, **30***d* of the first layer **30** are not offset from the corresponding first, second, third and fourth edges **32***a*, **32***b*, **32***c*, **32***d* of the second layer **32**. In some embodiments, at least two of the first, second, third and fourth edges **30***a*, **30***b*, **30***c*, **30***d* of the first layer **30** is offset from the corresponding first, second, third and fourth edges **32***a*, **32***b*, **32***c*, **32***d* of the second layer **32**, while the remaining ones of the first, second, third and fourth edges **30***a*, **30***b*, **30***c*, **30***d* of the first layer **30** are not offset from the corresponding first, second, third and fourth edges **32***a*, **32***b*, **32***c*, **32***d* of the second layer **32**. In some embodiments, at least three of the first, second, third and fourth edges **30***a*, **30***b*, **30***c*, **30***d* of the first layer **30** is offset from the corresponding first, second, third and fourth edges **32***a*, **32***b*, **32***c*, **32***d* of the second layer **32**, while the remaining ones of the first, second, third and fourth edges **30***a*, **30***b*, **30***c*, **30***d* of the first layer **30** are not offset from the corresponding first, second, third and fourth edges **32***a*, **32***b*, **32***c*, **32***d* of the second layer **32**.

In some embodiments, the second layer **32** forms a lower surface of the photovoltaic module **10**. In some embodiments, the first layer **30** forms a lower surface of the photovoltaic module **10** (see FIG. **4**).

In some embodiments, the first layer **30** includes a first length L**1** extending from the first edge **30***a* of the first layer **30** to the second edge of the first layer **30**. In some embodiments, the second layer **32** includes a second length L**2** extending from the first edge **32***a* of the second layer **32** to the second edge **32***b* of the second layer **32**. Referring to FIG. **1**, in some embodiments, the first length L**1** is greater than the second length L**2**. Referring to FIG. **3**, in some embodiments, the second length L**2** is greater than the first length L**1**.

In some embodiments, the first layer **30** includes a first width W**1** extending from the third edge **30***c* of the first layer **30** to the fourth edge **30***d* of the first layer **30**. In some embodiments, the second layer **32** includes a second width W**2** extending from the third edge **32***c* of the second layer **32** to the fourth edge **32***d* of the second layer **32**. In some embodiments, the first width W**1** is greater than the second width W**2**. In some embodiments, the second width W**2** is greater than the first width W**1**.

Referring to FIG. **5**, in some embodiments, the first edge **30***a* of the first layer **30** is offset from the first edge **32***a* of the second layer **32** by a first distance D**1**. In some embodiments, the second edge **30***b* of the first layer **30** is offset from the second edge **32***b* of the second layer by a second distance D**2**. In some embodiments, the third edge **30***c* of the first layer **30** is offset from the third edge **32***c* of the second layer **32** by a third distance D**3**. In some embodiments, the fourth edge **30***d* of the first layer **30** is offset from the fourth edge **32***d* of the second layer **32** by a fourth distance D**4**.

In some embodiments, the first distance D**1**, the second distance D**2**, the third distance D**3** and the fourth distance D**4** are equal to one another. In some embodiments, the first distance D**1**, the second distance D**2**, the third distance D**3** and the fourth distance D**4** are all different from one another. In some embodiments, the first distance D**1** is equal to the second distance D**2**. In some embodiments, the third distance D**3** is equal to the fourth distance D**4**.

In some embodiments, the first distance D**1** is 1 mm to 10 mm. In some embodiments, the first distance D**1** is 2 mm to 10 mm. In some embodiments, the first distance D**1** is 3 mm to 10 mm. In some embodiments, the first distance D**1** is 4 mm to 10 mm. In some embodiments, the first distance D**1** is 5 mm to 10 mm. In some embodiments, the first distance D**1** is 6 mm to 10 mm. In some embodiments, the first distance D**1** is 7 mm to 10 mm. In some embodiments, the first distance D**1** is 8 mm to 10 mm. In some embodiments, the first distance D**1** is 9 mm to 10 mm. In some embodiments, the first distance D**1** is 1 mm. In some embodiments, the first distance D**1** is 2 mm. In some embodiments, the first distance D**1** is 3 mm. In some embodiments, the first distance D**1** is 4 mm. In some embodiments, the first distance D**1** is 5 mm. In some embodiments, the first distance D**1** is 6 mm. In some embodiments, the first distance D**1** is 7 mm. In some embodiments, the first distance D**1** is 8 mm. In some embodiments, the first distance D**1** is 9 mm. In some embodiments, the first distance D**1** is 10 mm.

In some embodiments, the first distance D**2** is 1 mm to 10 mm. In some embodiments, the first distance D**2** is 2 mm to 10 mm. In some embodiments, the first distance D**2** is 3 mm to 10 mm. In some embodiments, the first distance D**2** is 4 mm to 10 mm. In some embodiments, the first distance D**2** is 5 mm to 10 mm. In some embodiments, the first distance D**2** is 6 mm to 10 mm. In some embodiments, the first distance D**2** is 7 mm to 10 mm. In some embodiments, the first distance D**2** is 8 mm to 10 mm. In some embodiments, the first distance D**2** is 9 mm to 10 mm. In some embodiments, the first distance D**2** is 1 mm. In some embodiments, the first distance D**2** is 2 mm. In some embodiments, the first distance D**2** is 3 mm. In some embodiments, the first distance D**2** is 4 mm. In some embodiments, the first distance D**2** is 5 mm. In some embodiments, the first distance D**2** is 6 mm. In some embodiments, the first distance D**2** is 7 mm. In some embodiments, the first distance D**2** is 8 mm. In some embodiments, the first distance D**2** is 9 mm. In some embodiments, the first distance D**2** is 10 mm.

In some embodiments, the first distance D**3** is 1 mm to 10 mm. In some embodiments, the first distance D**3** is 2 mm to 10 mm. In some embodiments, the first distance D**3** is 3 mm to 10 mm. In some embodiments, the first distance D**3** is 4 mm to 10 mm. In some embodiments, the first distance D**3** is 5 mm to 10 mm. In some embodiments, the first distance D**3** is 6 mm to 10 mm. In some embodiments, the first distance D**3** is 7 mm to 10 mm. In some embodiments, the first distance D**3** is 8 mm to 10 mm. In some embodiments, the first distance D**3** is 9 mm to 10 mm. In some embodiments, the first distance D**3** is 1 mm. In some embodiments, the first distance D**3** is 2 mm. In some embodiments, the first distance D**3** is 3 mm. In some embodiments, the first distance D**3** is 4 mm. In some embodiments, the first distance D**3** is 5 mm. In some embodiments, the first distance D**3** is 6 mm. In some embodiments, the first distance D**3** is 7 mm. In some embodiments, the first distance D**3** is 8 mm. In some embodiments, the first distance D**3** is 9 mm. In some embodiments, the first distance D**3** is 10 mm.

In some embodiments, the first distance D**4** is 1 mm to 10 mm. In some embodiments, the first distance D**4** is 2 mm to 10 mm. In some embodiments, the first distance D**4** is 3 mm to 10 mm. In some embodiments, the first distance D**4** is 4 mm to 10 mm. In some embodiments, the first distance D**4** is 5 mm to 10 mm. In some embodiments, the first distance D**4** is 6 mm to 10 mm. In some embodiments, the first distance D**4** is 7 mm to 10 mm. In some embodiments, the first distance D**4** is 8 mm to 10 mm. In some embodiments, the first distance D**4** is 9 mm to 10 mm. In some embodiments, the first distance D**4** is 1 mm. In some embodiments, the first distance D**4** is 2 mm. In some embodiments, the first distance D**4** is 3 mm. In some embodiments, the first distance D**4** is 4 mm. In some embodiments, the first distance D**4** is 5 mm. In some embodiments, the first

distance D4 is 6 mm. In some embodiments, the first distance D4 is 7 mm. In some embodiments, the first distance D4 is 8 mm. In some embodiments, the first distance D4 is 9 mm. In some embodiments, the first distance D4 is 10 mm.

Referring to FIGS. **1** through **4**, **6** and **7**, In some embodiments, the glass layer **22** includes a first edge **22***a*, a second edge **22***b* opposite the first edge **22***a*, a third edge **22***c* extending from the first edge **22***a* to the second edge **22***b*, and a fourth edge **22***d* opposite the third edge **22***c* and extending from the first edge **22***a* to the second edge **22***b*. In some embodiments, the first edge **22***a* is offset from the first edge **32***a* of the second layer **32**.

In some embodiments, the first edge **22***a* is offset from the first edge **32***a* of the second layer **32** by the first distance D**1**. In some embodiments, the second edge **22***b* of the glass layer **22** is offset from the second edge **32***b* of the second layer **32**. In some embodiments, the second edge **22***b* of the glass layer **22** is offset from the second edge **32***b* of the second layer **32** by the second distance D**2**. In some embodiments, the third edge **22***c* of the glass layer **22** is offset from the third edge **32***c* of the second layer **32**. In some embodiments, the third edge **22***c* of the glass layer **22** is offset from the third edge **32***c* of the second layer **32** by the third distance D**3**. In some embodiments, the fourth edge **22***d* of the glass layer **22** is offset from the fourth edge **32***d* of the second layer **32**. In some embodiments, the fourth edge **22***d* of the glass layer **22** is offset from the fourth edge **32***d* of the second layer **32** by the fourth distance D**4**.

In some embodiments, the first edge **22***a* of the glass layer **22** is offset from the first edge **30***a* of the first layer **30**. In some embodiments, the first edge **22***a* of the glass layer **22** is offset from the first edge **30***a* of the first layer **30** by the first distance D**1**. In some embodiments, the second edge **22***b* of the glass layer **22** is offset from the second edge **30***b* of the first layer **30**. In some embodiments, the second edge **22***b* of the glass layer **22** is offset from the second edge **30***b* of the first layer **30** by the second distance D**2**. In some embodiments, the third edge **22***c* of the glass layer **22** is offset from the third edge **30***c* of the first layer **30**. In some embodiments, the third edge **22***c* of the glass layer **22** is offset from the third edge **30***c* of the first layer **30** by the third distance D**3**. In some embodiments, the fourth edge **22***d* of the glass layer **22** is offset from the fourth edge **30***d* of the first layer **30**. In some embodiments, the fourth edge **22***d* of the glass layer **22** is offset from the fourth edge **30***d* of the first layer **30** by the fourth distance D**4**.

In some embodiments, the photovoltaic module **10** is laminated. In some embodiments, all of the previously mentioned applicable layers of the photovoltaic module **10** are laminated in one lamination step. In some embodiments, a method of making the photovoltaic module **10** includes a first lamination step and a second lamination step. In an embodiment, the first lamination step includes laminating the layers of the frontsheet **16**. In an embodiment, the first lamination step includes laminating the glass layer **22**, the polymer layer **22**, and the adhesive layer **24**. In some embodiments, the second lamination step includes laminating the frontsheet **16** with the remaining layers of the photovoltaic module **10**. In an embodiment, the second lamination step includes laminating the frontsheet **16**, the encapsulant **14**, the at least one solar cell **12**, and the backsheet **28**.

In some embodiments, a headlap portion is attached to the backsheet **28**. In some embodiments, the headlap portion is attached to the first layer **30**. In some embodiments, the headlap portion is attached to the second layer **32**. In some embodiments, headlap portion and the backsheet **28** are welded to one another. In some embodiments, headlap portion and the backsheet **28** are ultrasonically welded to one another. In some embodiments, headlap portion and the backsheet **28** are heat welded to one another. In some embodiments, headlap portion and the backsheet **28** are thermally bonded to one another. In some embodiments, headlap portion and the backsheet **28** are adhered to one another by an adhesive. In some embodiments, headlap portion and the backsheet **28** are laminated. In some embodiments, headlap portion and the backsheet **28** are co-extruded. In some embodiments, headlap portion and the backsheet **28** are mechanically attached to one another. In some embodiments, headlap portion and the backsheet **28** are attached to one another by at least one fastener. In some embodiments, headlap portion and the backsheet **28** are attached to one another by a plurality of fasteners. In some embodiments, headlap portion and the backsheet **28** are attached to one another by deforming one of headlap portion and the backsheet **28** into the other one of headlap portion and the backsheet **28**. In some embodiments, headlap portion and the backsheet **28** are attached to one another by deforming a portion of one of headlap portion and the backsheet **28** into the other one of headlap portion and the backsheet **28**. In some embodiments, headlap portion and the backsheet **28** are attached to one another by forming at least one hole in one or both of headlap portion and the backsheet **28** and dispensing molten material into the at least one hole to connect headlap portion and the backsheet **28**. In some embodiments, non-limiting examples of fasteners, fastening means and methods for fastening, connecting and attaching the first layer **30** to the second layer **32** are disclosed in U.S. Pat. No. 7,833,371 to Binkley et al, U.S. Pat. No. 8,006,457 to Binkley et al, U.S. Pat. No. 8,127,514 to Binkley et al, and U.S. Pat. No. 8,316,608 to Binkley et al, each of which is incorporated by reference herein in its entirety.

Referring to FIGS. **8** through **10**, in some embodiments, the offset of the backsheet **28** (i.e., either the first layer **30** or the second layer **32**) from the glass layer **22** reduces pinchoff on the edges of the photovoltaic module **10**. In some embodiments, as used herein, the terms "pinchoff" or "pinch" is that the thicknesses of the layers of the photovoltaic module **10** causes pressure at the edges **22***a* through **22***d* of the glass layer **22**, which can squeeze the encapsulant **14** while in a liquid form during lamination of the photovoltaic module **10**, and could result in reduced bond line thickness. In some embodiments, pinchoff can result in premature delamination of the backsheet **28** from the glass layer **22**. In some embodiments, the offset of the backsheet **28** (i.e., either the first layer **30** or the second layer **32**) from the glass layer **22** reduces visibility of any scrim included within the backsheet **28**. In some embodiments, the offset of one or more of the edges **32***a*, **32***b*, **32***c*, **32***d* of the second layer **32** relative to the corresponding edges **30***a*, **30***b*, **30***c*, **30***d* of the first layer **30** reduces the potential of the first layer **30** to pinch. In some embodiments, the offset of one or more of the edges **30***a*, **30***b*, **30***c*, **30***d* of the first layer **30** relative to the corresponding edges **32***a*, **32***b*, **32***c*, **32***d* of the second layer **32** reduces the potential of the second layer **32** to pinch. In some embodiments, each of the distances D**1** through D**4** is of a sufficient amount so as to enable the edges **30***a* through **30***d* of the first layer **30** and/or the edges **32***a* through **32***d* of the second layer **32** to reduce the potential of the first layer **30** and the second layer **32** to pinch.

In some embodiments, each of the distances D**1** through D**4** is of a sufficient amount so as to enable the edges **30***a*

through **30***d* of the first layer **30** and/or the edges **32***a* through **32***d* of the second layer **32**, as applicable, to be cut or trimmed when the photovoltaic module **10** is installed on a roof deck **90** for aesthetically matching the photovoltaic module **10** with other ones of the photovoltaic module **10**.

In some embodiments, the roof deck **90** is a steep slope roof deck. As defined herein, a "steep slope roof deck" is any roof deck that is disposed on a roof having a pitch of Y/X, where Y and X are in a ratio of 4:12 to 12:12, where Y corresponds to the "rise" of the roof, and where X corresponds to the "run" of the roof.

In some embodiments, the roof deck **90** may be a sloped roof of a structure. As used herein, a "sloped" roof deck is a roof deck that has a slope less than a slope of a steep slope roof deck, but is not a flat roof deck.

In some embodiments, the roof deck **90** is a component of a commercial roof. In some embodiments, the roof deck **90** has a slope of 3 inches per foot or less. In some embodiments, the roof deck **90** has a slope of 0.25 inch to 3 inches per foot. In some embodiments, the roof deck **90** has a slope of 0.25 inch to 2 inches per foot. In some embodiments, the roof deck **90** has a slope of 0.25 inch to 1 inch per foot. In some embodiments, the roof deck **90** has a slope of 1 inch to 3 inches per foot. In some embodiments, the roof deck **90** has a slope of 1 inch to 2 inches per foot. In some embodiments, the roof deck **90** has a slope of 2 inches to 3 inches per foot.

In some embodiments, a system of at least one of the photovoltaic modules **10** is installed on the roof deck **90**. In some embodiments, a system of a plurality of the photovoltaic modules **10** is installed on the roof deck **90**. In some embodiments, the plurality of the photovoltaic modules **10** includes two of the photovoltaic modules **10**. In some embodiments, the plurality of the photovoltaic modules **10** includes three of the photovoltaic modules **10**. In some embodiments, the plurality of the photovoltaic modules **10** includes four of the photovoltaic modules **10**. In some embodiments, the plurality of the photovoltaic modules **10** includes five of the photovoltaic modules **10**. In some embodiments, the plurality of the photovoltaic modules **10** includes six of the photovoltaic modules **10**. In some embodiments, the plurality of the photovoltaic modules **10** includes more than six of the photovoltaic modules **10**. In some embodiments, the plurality of the photovoltaic modules **10** is installed in an array on the roof deck **90**. In some embodiments, the array includes a plurality of subarrays. In some embodiments, the array includes two subarrays. In some embodiments, the array includes three subarrays. In some embodiments, the array includes four subarrays. In some embodiments, the array includes five subarrays. In some embodiments, the array includes six subarrays. In some embodiments, the array includes more than six subarrays.

In some embodiments, the plurality of photovoltaic modules **10** is installed directly to the roof deck **90**. In some embodiments, each of the plurality of photovoltaic modules **10** is installed on the roof deck **90** by a plurality of fasteners. In some embodiments, the plurality of fasteners are installed through the headlap portion. In some embodiments, the plurality of fasteners includes a plurality of nails. In some embodiments, the plurality of fasteners includes a plurality of screws. In some embodiments, the plurality of fasteners includes a plurality of rivets. In some embodiments, the plurality of fasteners includes a plurality of staples.

In some embodiments, each of the plurality of photovoltaic modules **10** is installed on the roof deck **90** by an adhesive. In some embodiments, the adhesive is adhered directly to the roof deck **90**. In some embodiments, the adhesive is adhered to an underlayment. In some embodiments, the underlayment is adhered directly to the roof deck **90**. In some embodiments, the adhesive is located on a rear surface of the photovoltaic module **10**. In some embodiments, the adhesive includes at least one adhesive strip. In some embodiments, the adhesive includes a plurality of adhesive strips. In some embodiments, the plurality of adhesive strips is arranged intermittently. In some embodiments, the adhesive is located proximate to one edge of the photovoltaic module **10**. In some embodiments, the adhesive is a peel and stick film sheet. In some embodiments, the peel and stick film sheet includes at least one sheet of film removably attached to the rear surface. In some embodiments, the peel and stick film sheet is composed of Ever-Guard Freedom HW peel and stick membrane manufactured by GAF. In some embodiments, the adhesive includes polyvinyl butyrate, acrylic, silicone, or polycarbonate. In some embodiments, the adhesive includes pressure sensitive adhesives.

In some embodiments, one or more of the photovoltaic modules **10** is a photovoltaic module shown and described in either or both of U.S. application Ser. No. 17/831,307, filed Jun. 2, 2022, titled "Roofing Module System," and published under U.S. Patent Application Publication No. 2022-0393637 on Dec. 8, 2022; and/or U.S. application Ser. No. 18/169,718, filed Feb. 15, 2023, titled "Roofing Module System," and published under U.S. Patent Application Publication No. 2023-0203815 on Jun. 29, 2023, the disclosures of each of which are incorporated by reference herein in their entireties. In some embodiments, the photovoltaic module includes a structure, composition, components, and/or function similar to those of one or more embodiments of the photovoltaic modules disclosed in PCT International Patent Publication No. WO 2022/051593, Application No. PCT/US2021/049017, published Mar. 10, 2022, entitled "Building Integrated Photovoltaic System," owned by GAF Energy LLC, and U.S. Pat. No. 11,251,744 to Bunea et al., issued Feb. 15, 2022, entitled "Photovoltaic Shingles and Methods of Installing Same," the contents of each of which are incorporated by reference herein in their entirety.

In some embodiments, the system includes a plurality of roofing shingles. In some embodiments, the photovoltaic modules **10** have an appearance that aesthetically match the appearance of the plurality of roofing shingles. In some embodiments, the roofing shingle is a cuttable roofing module. In some embodiments, the roofing shingle is a nailable roofing module. In some embodiments, the roofing shingle is a cuttable roofing module shown and described in U.S. application Ser. No. 17/831,307, filed Jun. 2, 2022, titled "Roofing Module System," and published under U.S. Patent Application Publication No. 2022-0393637 on Dec. 8, 2022; and/or U.S. application Ser. No. 18/169,718, filed Feb. 15, 2023, titled "Roofing Module System," and published under U.S. Patent Application Publication No. 2023-0203815 on Jun. 29, 2023, the disclosures of each of which are incorporated by reference herein in their entireties.

What is claimed is:

1. A system, comprising:

a plurality of photovoltaic modules installed on a roof deck,

wherein each of the photovoltaic modules includes

at least one solar cell,

a first encapsulant encapsulating the at least one solar cell,

wherein the first encapsulant includes a first surface and a second surface opposite the first surface,

a frontsheet juxtaposed with the first surface of the first encapsulant,

wherein the frontsheet includes a glass layer, and

a backsheet juxtaposed with the second surface of the first encapsulant,

wherein the backsheet includes

a first layer,

wherein the first layer includes a first edge, a second edge opposite the first edge, a third edge extending from the first edge to the second edge, and a fourth edge opposite the third edge and extending from the first edge to the second edge,

wherein the first layer includes a first length extending from the first edge to the second edge, and

a second layer adjacent and below the first layer,

wherein the second layer includes a first edge, a second edge opposite the first edge of the second layer, a third edge extending from the first edge of the second layer to the second edge of the second layer, and a fourth edge opposite the third edge of the second layer and extending from the first edge of the second layer to the second edge of the second layer,

wherein the second layer includes a second length extending from the first edge of the second layer to the second edge of the second layer, and wherein the first length is greater than the second length,

wherein the second layer is the lowermost layer of the photovoltaic module,

wherein the first edge of the first layer is offset and extends outwardly from the first edge of the second layer,

wherein the second edge of the first layer is offset and extends outwardly from the second edge of the second layer,

wherein the third edge of the first layer is offset from the third edge of the second layer, and

wherein the fourth edge of the first layer is offset from the fourth edge of the second layer, and

an adhesive layer between the first layer and the second layer,

wherein the adhesive layer includes a first edge and a second edge opposite the first edge of the adhesive layer,

wherein the adhesive layer includes a third length extending from the first edge of the adhesive layer to the second edge of the adhesive layer, and

wherein the third length is equal to the second length.

2. The system of claim **1**, wherein the first layer includes a first width extending from the third edge of the first layer to the fourth edge of the first layer, wherein the second layer includes a second width extending from the third edge of the second layer to the fourth edge of the second layer, and wherein the first width is greater than the second width.

3. The system of claim **2**, wherein the second layer is composed of thermoplastic polyolefin (TPO).

4. The system of claim **2**, wherein the first layer is composed of a polymer.

5. The system of claim **4**, wherein the first layer is composed of thermoplastic polyolefin (TPO).

6. The system of claim **2**, wherein the glass layer includes:

a first edge,

a second edge opposite the first edge of the glass layer,

a third edge extending from the first edge of the glass layer to the second edge of the glass layer, and

a fourth edge opposite the third edge of the glass layer and extending from the first edge of the glass layer to the second edge of the glass layer,

wherein the first edge of the glass layer is offset from the first edge of the second layer,

wherein the second edge of the glass layer is offset from the second edge of the second layer,

wherein the third edge of the glass layer is offset from the third edge of the second layer, and

wherein the fourth edge of the glass layer is offset from the fourth edge of the second layer.

7. The system of claim **1**, wherein the first edge of the first layer is offset from the first edge of the second layer by a first distance, wherein the second edge of the first layer is offset from the second edge of the second layer by a second distance, wherein the third edge of the first layer is offset from the third edge of the second layer by a third distance, and wherein the fourth edge of the first layer is offset from the fourth edge of the second layer by a fourth distance.

8. The system of claim **7**, wherein the first distance, the second distance, the third distance and the fourth distance are equal to one another.

9. The system of claim **7**, wherein the first distance is equal to the second distance, and wherein the third distance is equal to the fourth distance.

10. The system of claim **1**, wherein the frontsheet includes a polymer layer and a second encapsulant, and wherein the polymer layer is attached to the glass layer by the second encapsulant.

11. A photovoltaic module, comprising:

at least one solar cell,

a first encapsulant encapsulating the at least one solar cell,

wherein the first encapsulant includes a first surface and a second surface opposite the first surface,

a frontsheet juxtaposed with the first surface of the first encapsulant,

wherein the frontsheet includes a glass layer, and

a backsheet juxtaposed with the second surface of the first encapsulant,

wherein the backsheet includes

a first layer,

wherein the first layer includes a first edge, a second edge opposite the first edge, a third edge extending from the first edge to the second edge, and a fourth edge opposite the third edge and extending from the first edge to the second edge,

wherein the first layer includes a first length extending from the first edge to the second edge, and a second layer attached to and below the first layer,

wherein the second layer includes a first edge, a second edge opposite the first edge of the second layer, a third edge extending from the first edge of the second layer to the second edge of the second layer, and a fourth edge opposite the third edge of the second layer and extending from the first edge of the second layer to the second edge of the second layer,

wherein the second layer includes a second length extending from the first edge of the second layer

to the second edge of the second layer, and wherein the first length is greater than the second length,

wherein the second layer is the lowermost layer of the photovoltaic module,

wherein the first edge of the first layer is offset and extends outwardly from the first edge of the second layer,

wherein the second edge of the first layer is offset and extends outwardly from the second edge of the second layer,

wherein the third edge of the first layer is offset from the third edge of the second layer, and

wherein the fourth edge of the first layer is offset from the fourth edge of the second layer,

wherein the second layer forms a lower surface of the photovoltaic module, and

wherein at least one of the first layer and the second layer is composed of thermoplastic polyolefin (TPO), and

an adhesive layer between the first layer and the second layer,

wherein the adhesive layer includes a first edge and a second edge opposite the first edge of the adhesive layer,

wherein the adhesive layer includes a third length extending from the first edge of the adhesive layer to the second edge of the adhesive layer, and

wherein the third length is equal to the second length.

12. A system, comprising:

a plurality of photovoltaic modules installed on a roof deck,

wherein each of the photovoltaic modules includes

at least one solar cell,

a first encapsulant encapsulating the at least one solar cell,

wherein the first encapsulant includes a first surface and a second surface opposite the first surface,

a frontsheet juxtaposed with the first surface of the first encapsulant, and

a backsheet juxtaposed with the second surface of the first encapsulant,

wherein the backsheet includes

a first layer,

wherein the first layer includes a first edge and a second edge opposite the first edge,

wherein the first layer includes a first length extending from the first edge to the second edge, and a second layer adjacent and below the first layer,

wherein the second layer includes a first edge and a second edge opposite the first edge of the second layer,

wherein the second layer includes a second length extending from the first edge of the second layer to the second edge of the second layer, and wherein the first length is greater than the second length,

wherein the second layer is the lowermost layer of the photovoltaic module,

wherein the first edge of the first layer is offset and extends outwardly from the first edge of the second layer, and

wherein the second edge of the first layer is offset and extends outwardly from the second edge of the second layer, and

an adhesive layer between the first layer and the second layer,

wherein the adhesive layer includes a first edge and a second edge opposite the first edge of the adhesive layer,

wherein the adhesive layer includes a third length extending from the first edge of the adhesive layer to the second edge of the adhesive layer, and

wherein the third length is equal to the second length.

13. The system of claim **12**, wherein the second layer is composed of thermoplastic polyolefin (TPO).

14. The system of claim **12**, wherein the first layer is composed of a polymer.

15. The system of claim **14**, wherein the first layer is composed of thermoplastic polyolefin (TPO).

16. The system of claim **12**, wherein the frontsheet includes a glass layer.

17. The system of claim **16**, wherein the frontsheet includes a polymer layer and a second encapsulant, and wherein the polymer layer is attached to the glass layer by the second encapsulant.

18. The system of claim **16**, wherein the glass layer includes a first edge, and a second edge opposite the first edge of the glass layer, wherein the first edge of the glass layer is offset from the first edge of the second layer, and wherein the second edge of the glass layer is offset from the second edge of the second layer.

19. The system of claim **18**, wherein the glass layer includes a third edge and a fourth edge opposite the third edge of the glass layer, wherein the third edge of the glass layer is offset from the third edge of the second layer, and wherein the fourth edge of the glass layer is offset from the fourth edge of the second layer.

* * * * *