US012397867B2

(12) **United States Patent**
Yoshii et al.

(10) **Patent No.: US 12,397,867 B2**
(45) **Date of Patent: Aug. 26, 2025**

(54) **WORK MACHINE**

(71) Applicant: **Kubota Corporation**, Osaka (JP)

(72) Inventors: **Kaichiro Yoshii**, Sakai (JP); **Minoru Hiraoka**, Sakai (JP); **Yukifumi Yamanaka**, Sakai (JP); **Junichi Ishikawa**, Sakai (JP); **Yusuke Ida**, Sakai (JP); **Yuhei Hazawa**, Sakai (JP); **Katsutoshi Jinnouchi**, Sakai (JP); **Ryota Niki**, Sakai (JP); **Ryota Yamagishi**, Sakai (JP); **Yuma Ikeda**, Sakai (JP); **Taichi Okumura**, Sakai (JP); **Tomohiro Shimazaki**, Sakai (JP)

(73) Assignee: **KUBOTA CORPORATION**, Osaka (JP)

(*) Notice: Subject to any disclaimer, the term of this patent is extended or adjusted under 35 U.S.C. 154(b) by 0 days.

(21) Appl. No.: **18/961,584**

(22) Filed: **Nov. 27, 2024**

(65) **Prior Publication Data**

US 2025/0206395 A1 Jun. 26, 2025

(30) **Foreign Application Priority Data**

Dec. 22, 2023 (JP) 2023-217420
Dec. 22, 2023 (JP) 2023-217421
Dec. 22, 2023 (JP) 2023-217422

(51) **Int. Cl.**
B62D 65/12 (2006.01)
B60K 17/04 (2006.01)

(52) **U.S. Cl.**
CPC ***B62D 65/12*** (2013.01); ***B60K 17/04*** (2013.01)

(58) **Field of Classification Search**
CPC B62D 65/12; B60K 17/04
See application file for complete search history.

(56) **References Cited**

U.S. PATENT DOCUMENTS

2,065,437 A * 12/1936 Ewens F16H 9/04 474/4
2,729,299 A * 1/1956 Rink B60K 28/14 180/274
2,871,585 A * 2/1959 Merry A01D 69/002 37/243
4,971,170 A * 11/1990 Rasmussen B60K 6/00 903/902
9,493,185 B2 * 11/2016 Dada B60G 15/067
11,383,776 B2 * 7/2022 Ning B62D 63/02
11,472,308 B2 * 10/2022 Messina H01M 50/20
11,535,099 B2 * 12/2022 Shimazaki B60K 5/04
12,275,295 B2 * 4/2025 Takeda B60K 17/04
2023/0000003 A1 * 1/2023 Chrysanthakopoulos A01M 21/046

FOREIGN PATENT DOCUMENTS

JP 2014125107 A 7/2014
WO WO-2019085979 A1 * 5/2019 ..... B61F 5/30

* cited by examiner

Primary Examiner — Faye M Fleming
(74) *Attorney, Agent, or Firm* — Keating & Bennett, LLP

(57) **ABSTRACT**

A work machine includes a front wheel, a rear wheel, an intermediate wheel between the front wheel and the rear wheel, and a transmission to receive a driving force from a drive source and transmit the driving force to the intermediate wheel and at least one of the front wheel or the rear wheel that is drivable as a driving wheel. The intermediate wheel has an outside diameter smaller than an outside diameter of the driving wheel.

18 Claims, 21 Drawing Sheets

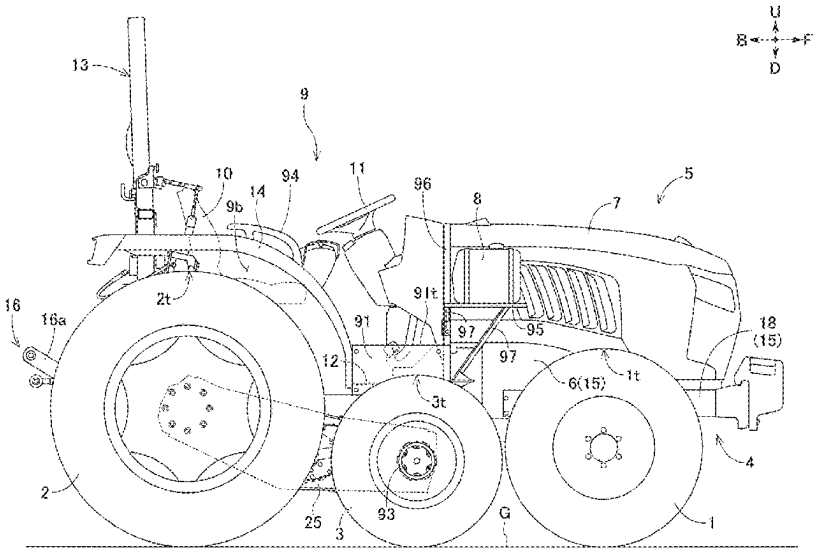

Fig.1

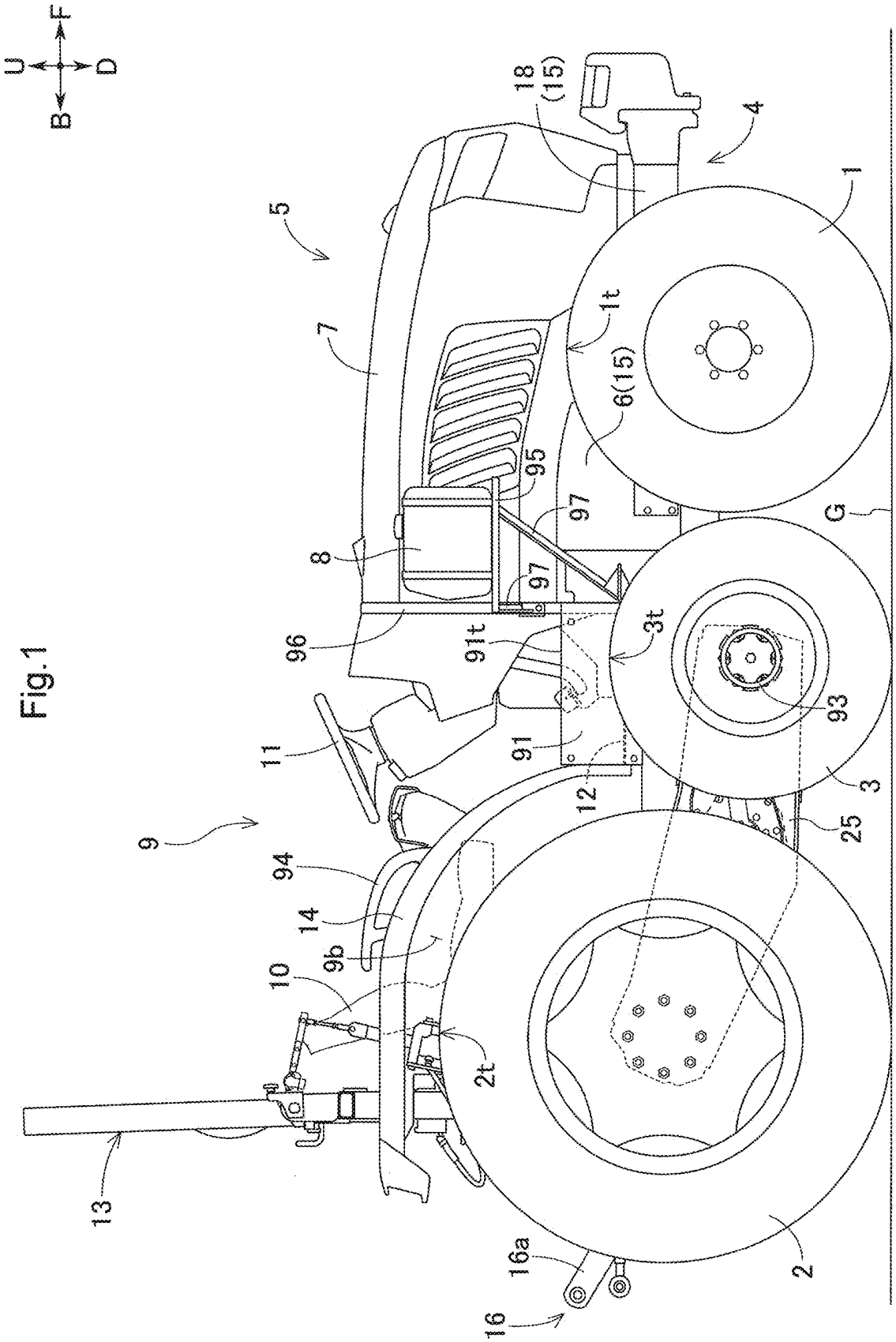
U
F
B
D
18
(15)
4
5
1
7
1t
6(15)
95
97
G
8
97
96
91t
3t
93
11
91
12
3
25
9
94
14
9b
10
2t
13
16a
2
16

Fig.2

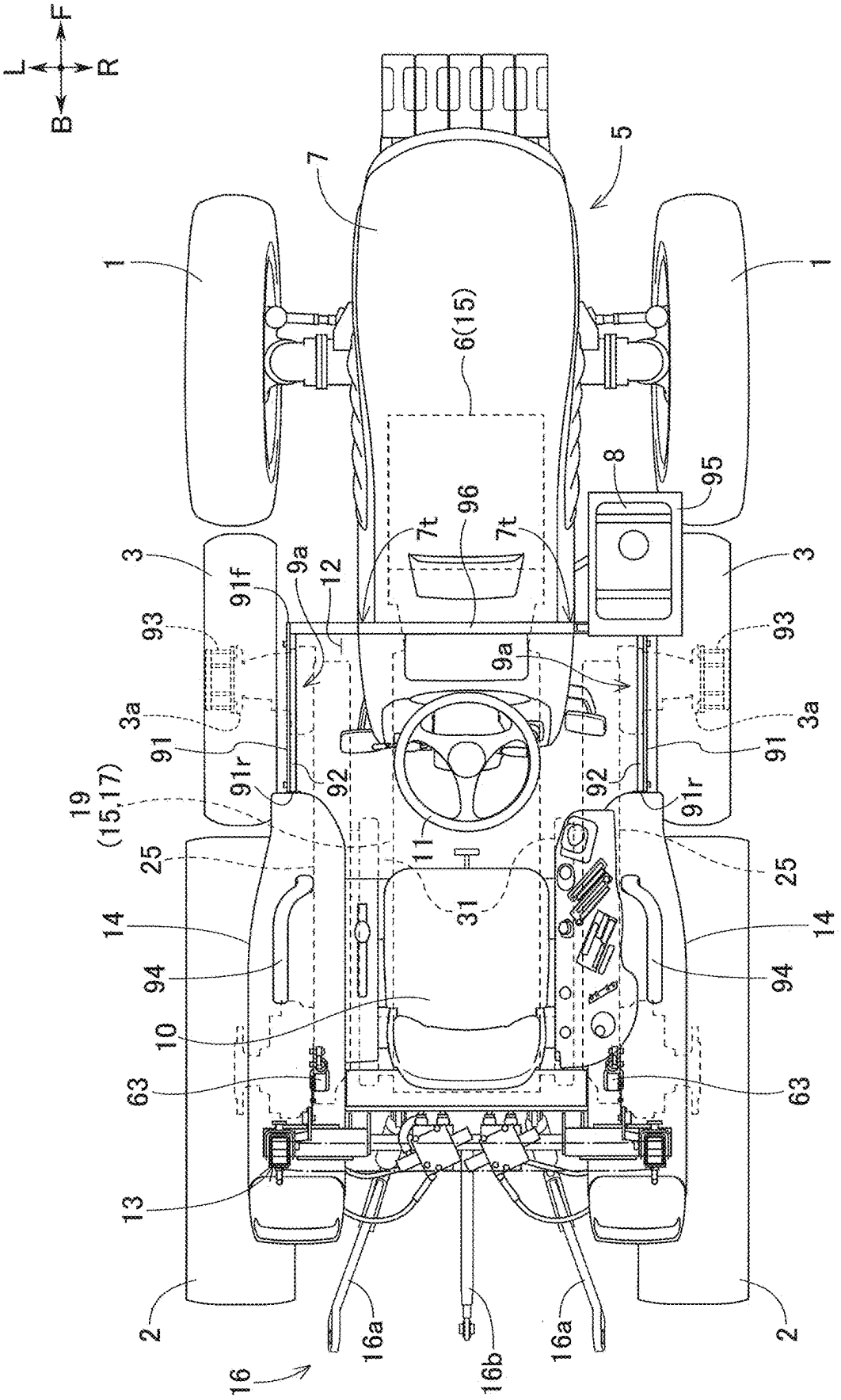
F
L
R
B
5
7
1
1
6(15)
8
95
96
7t
7t
3
3
91f
9a
12
93
93
9a
3a
3a
91
91
91r
92
92
91r
19
(15,17)
25
25
11
31
14
14
94
94
10
63
63
13
2
2
16a
16b
16a
16

Fig.3

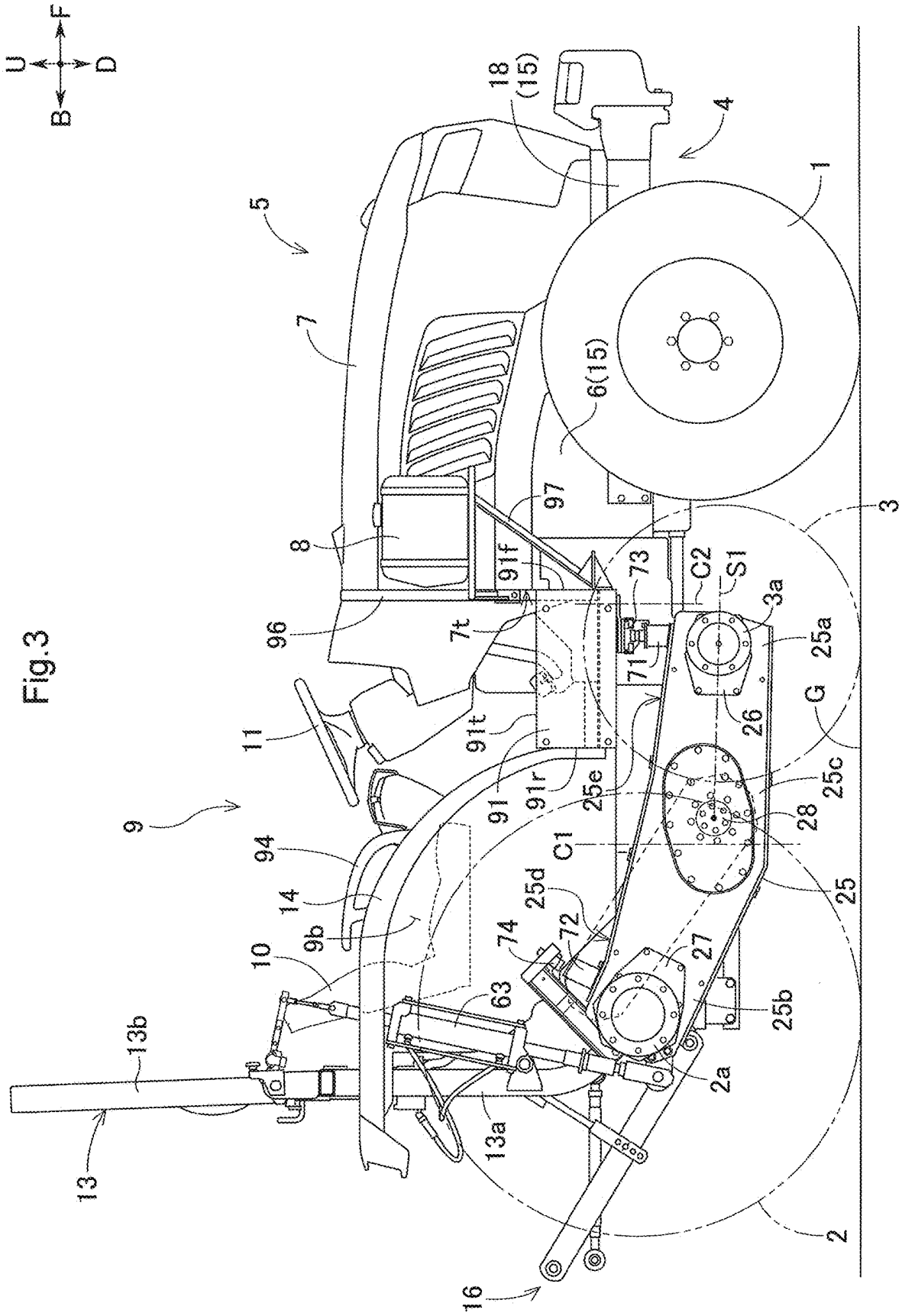
U
F
B
D
18
(15)
4
1
5
7
6(15)
97
3
8
91f
73
C2
S1
3a
96
7t
71
25a
26
G
11
91t
91
91r
25e
25c
28
9
94
C1
25
14
25d
9b
74
72
27
10
63
25b
13b
2a
13a
13
2
16

Fig.4

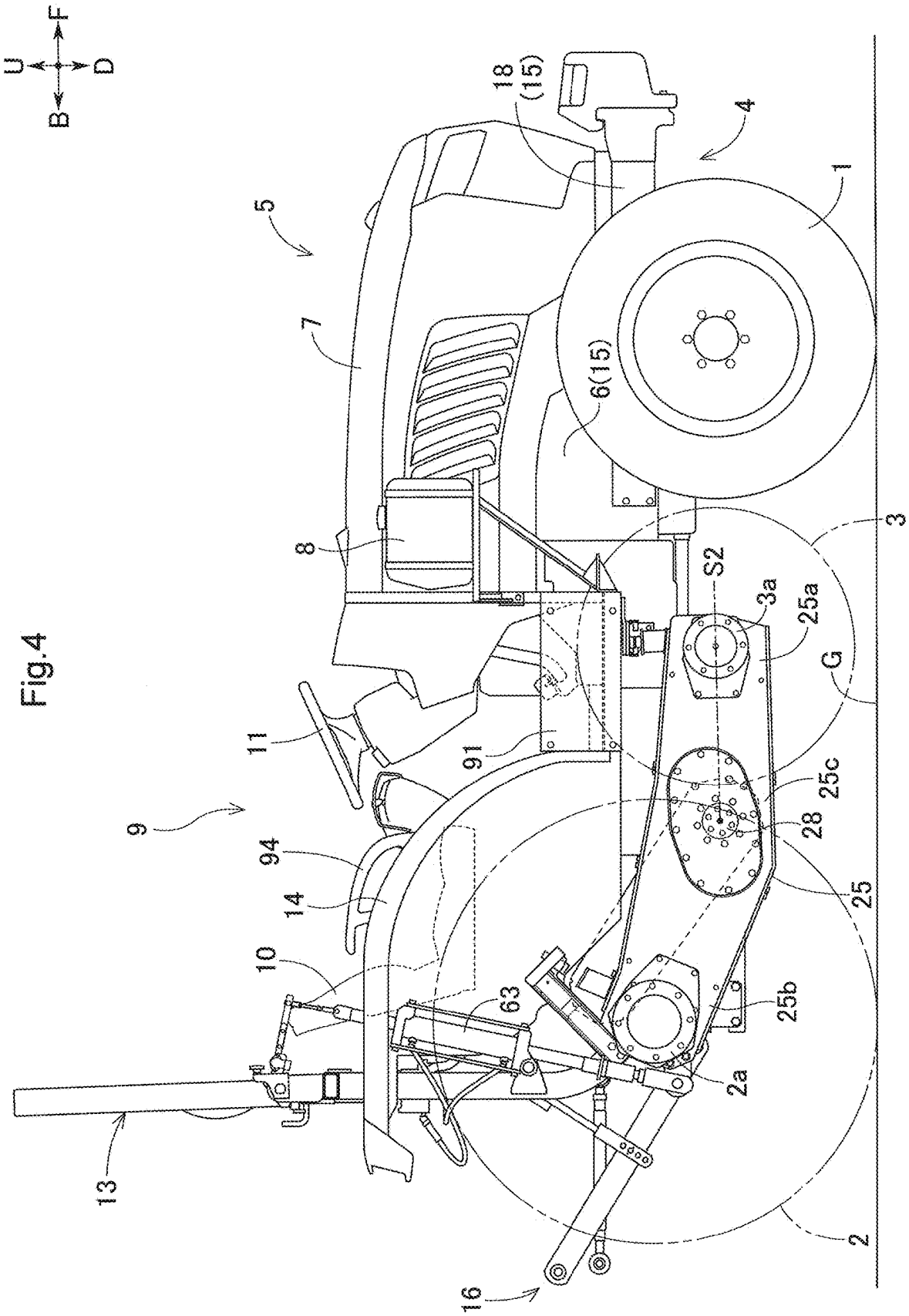
U
F
B
D
18
(15)
4
1
5
7
6(15)
3
8
S2
3a
25a
G
11
91
25c
9
28
94
25
14
10
63
25b
2a
13
2
16

Fig.5

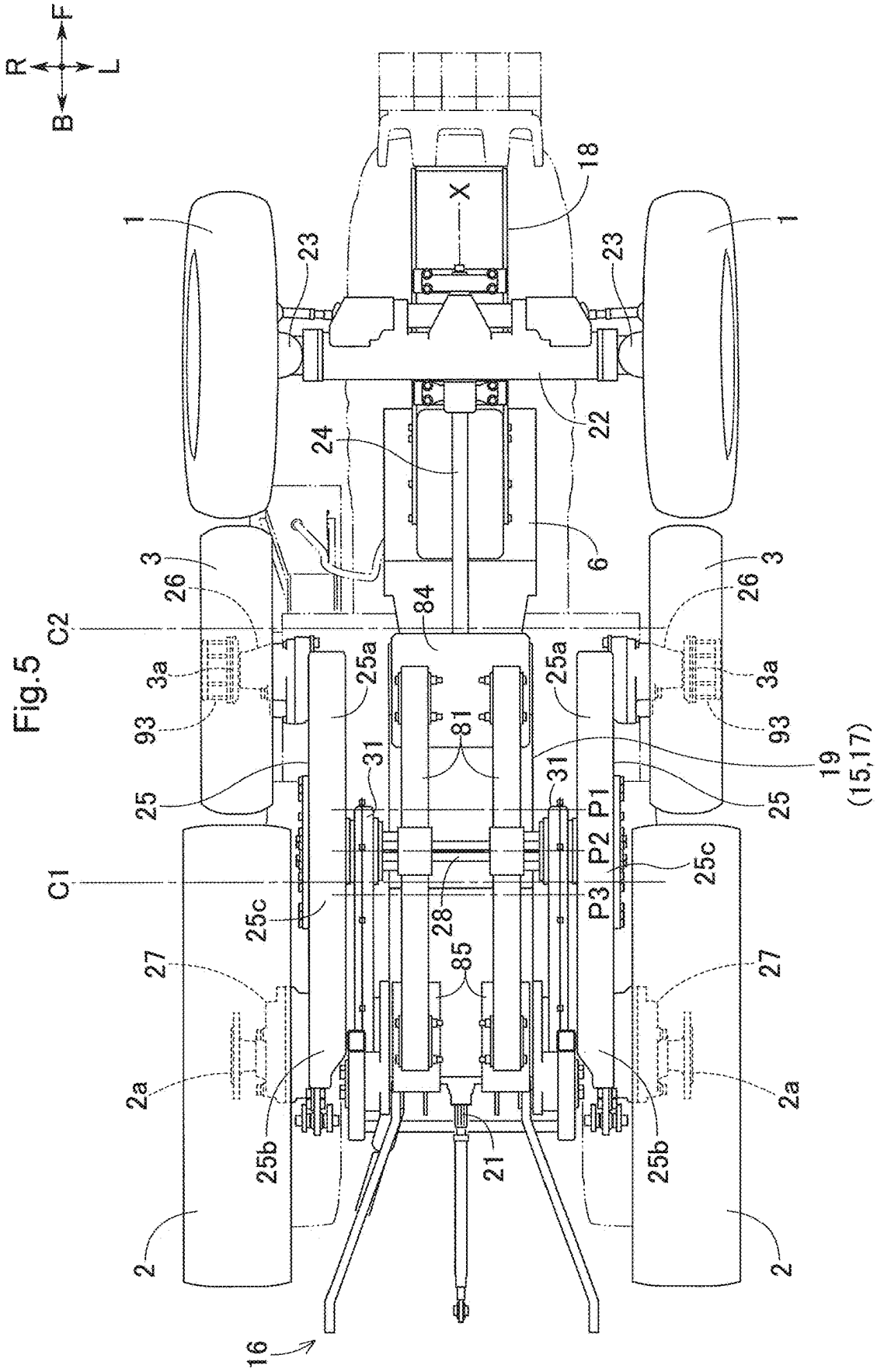
F
R
L
B
1
1
18
X
23
23
22
24
6
3
3
26
26
C2
84
3a
3a
25a
25a
93
93
81
19
(15,17)
31
31
25
25
P1
P2
P3
25c
25c
C1
28
85
27
27
2a
2a
25b
25b
21
2
2
16

Fig.6

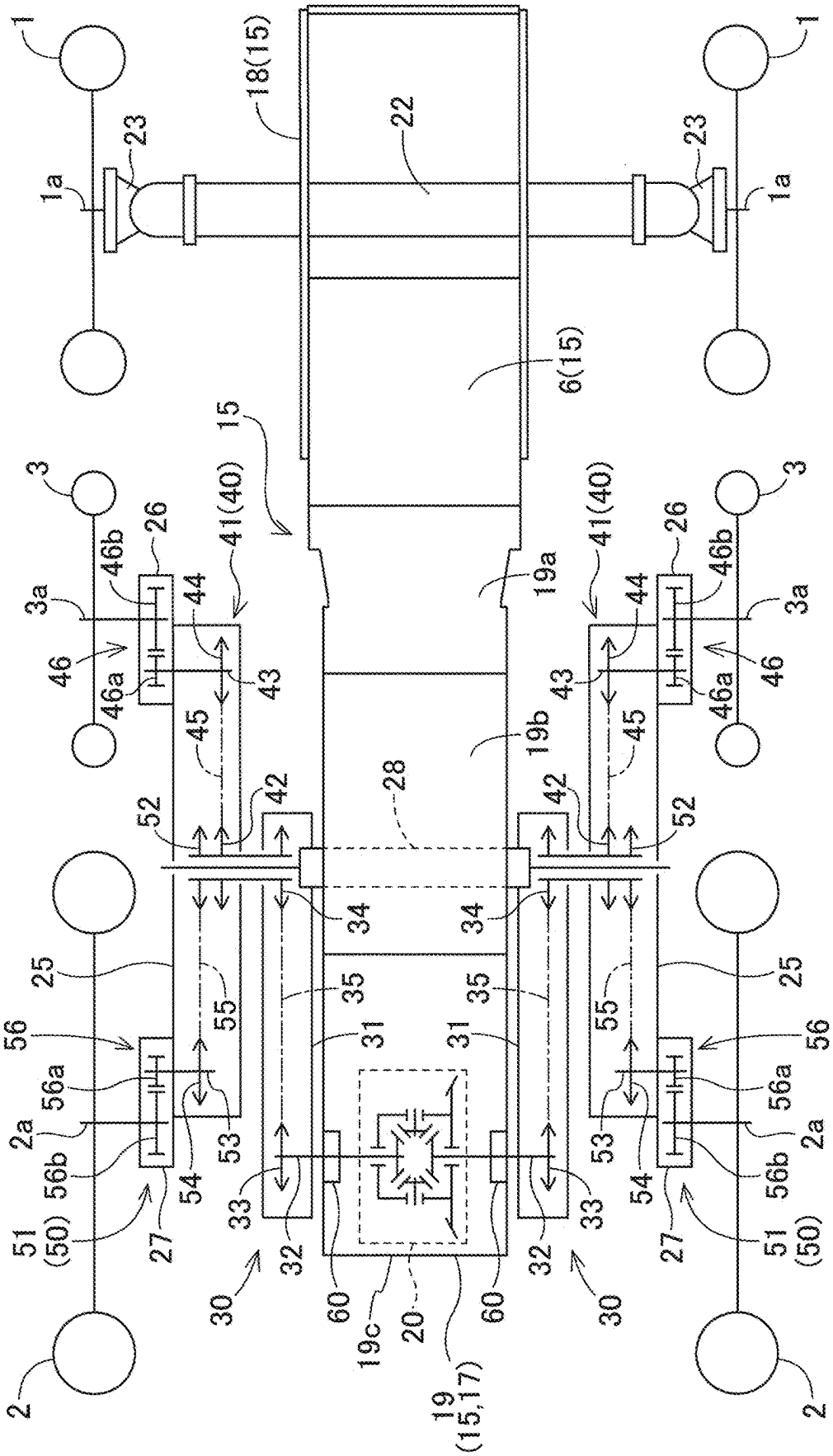
1
1a
23
18(15)
22
6(15)
15
3
3a
26
46b
46
46a
41(40)
44
43
45
19a
19b
28
42
52
34
25
55
35
31
56
56a
2a
56b
51
(50)
27
54
53
33
32
30
60
19c
20
19
(15,17)
2

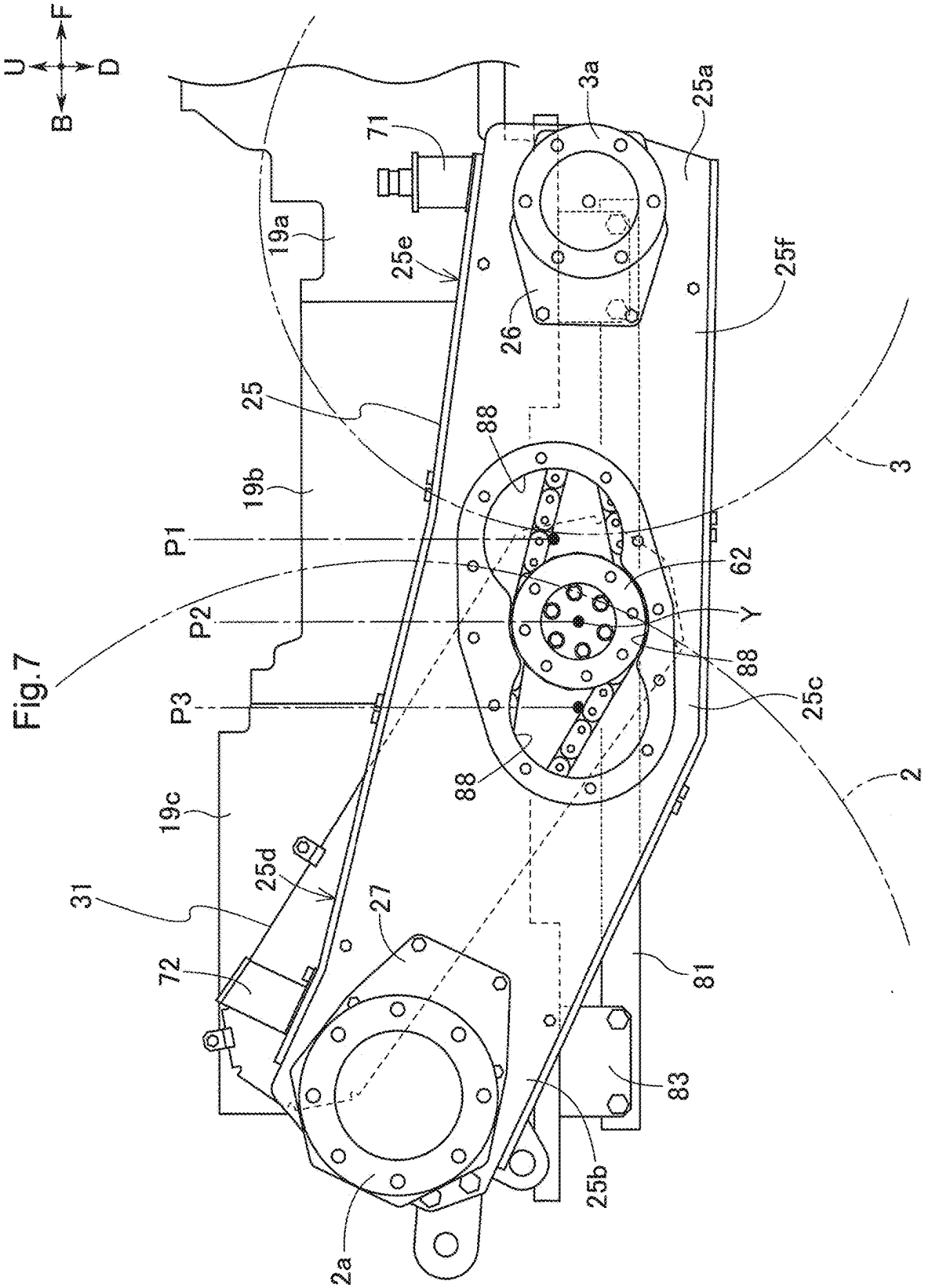
U
D
F
B
71
3a
25a
19a
25e
25f
26
25
88
3
19b
P1
62
P2
Y
88
P3
25c
88
2
19c
25d
31
27
72
81
83
25b
2a

Fig.7

Fig.8

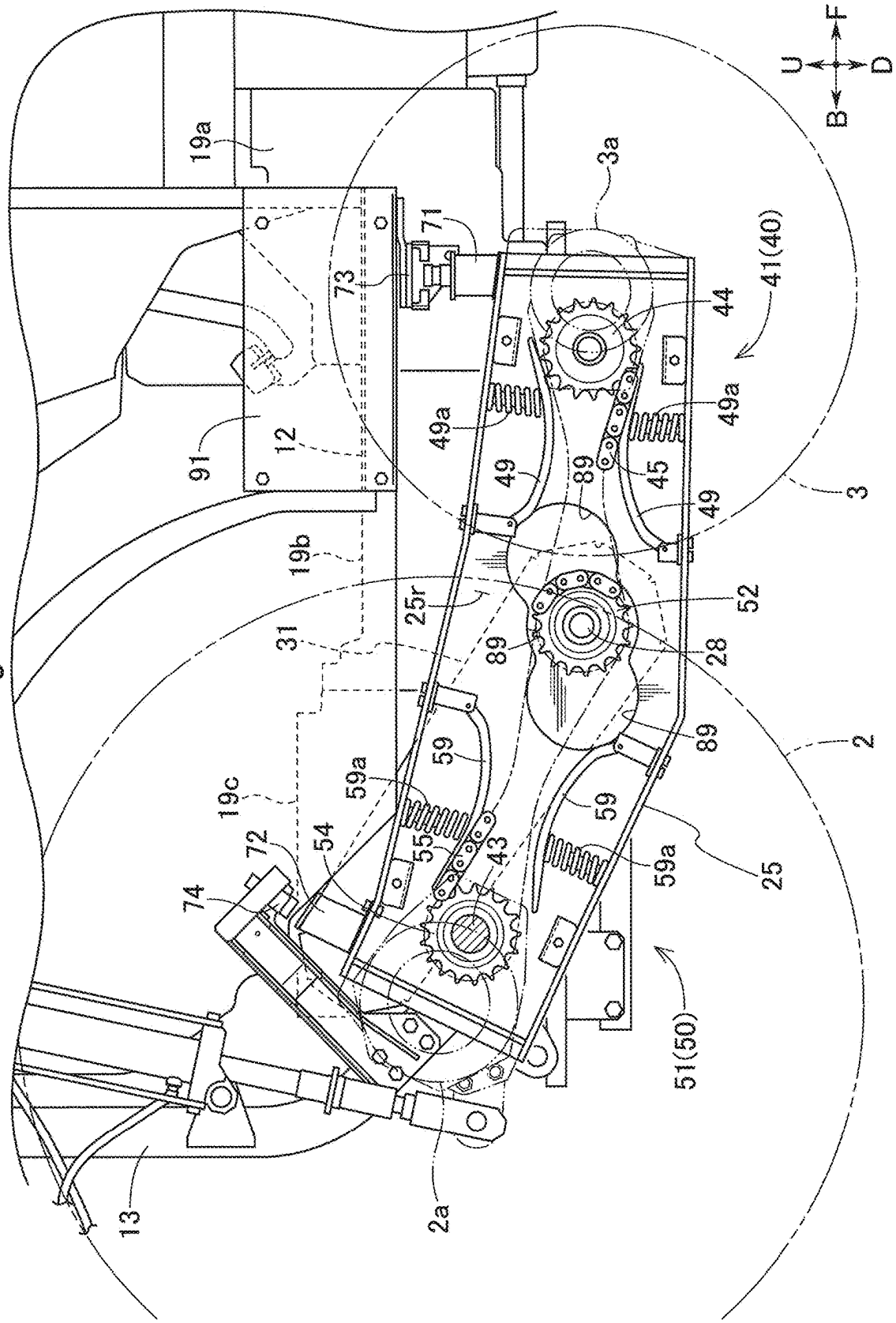

19a
3a
71
73
41(40)
44
49a
49a
91
12
49
89
45
49
3
19b
25r
52
31
89
28
89
2
59
59a
19c
59
72
54
55
43
59a
25
74
51(50)
13
2a
U
F
B
D

Fig.9

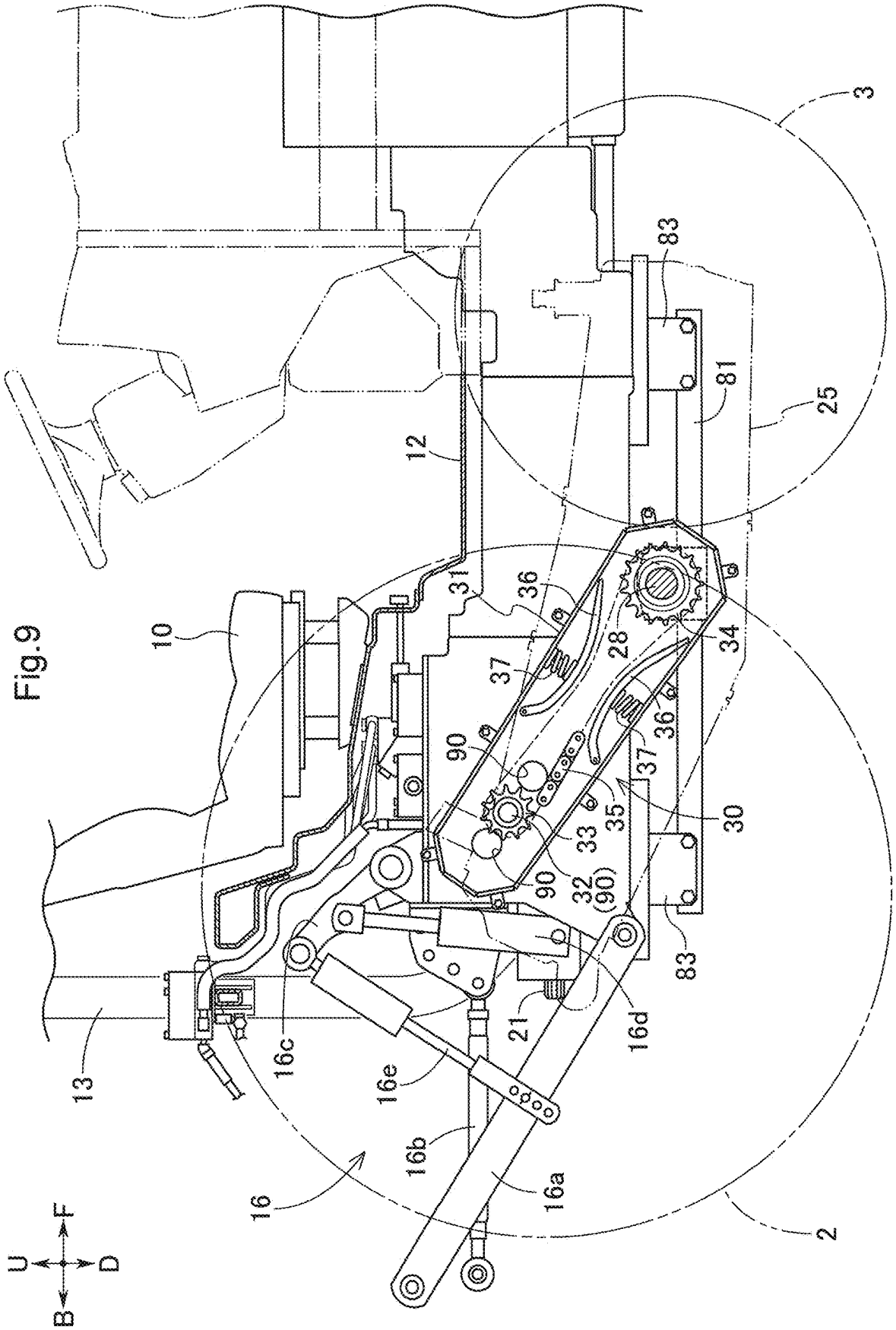
3
83
81
25
12
31
36
28
34
10
37
36
37
90
35
30
33
32
(90)
90
83
21
16d
16c
16e
13
16b
16a
16
2
F
U
D
B

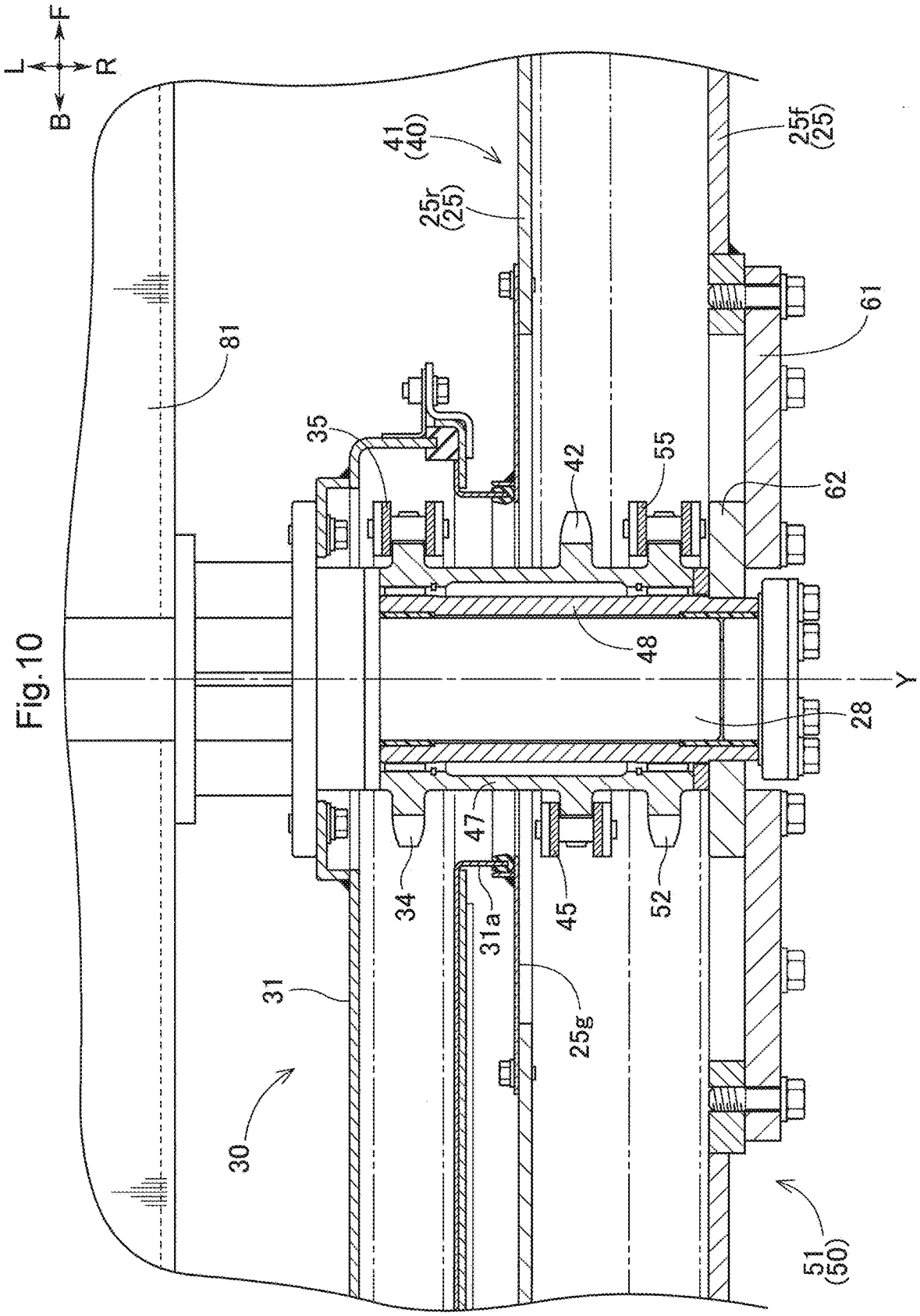
F
L
R
B
41
(40)
25r
(25)
25f
(25)
81
61
35
42
55
62
48
Y
28
47
34
31a
45
52
31
25g
30
51
(50)

Fig.10

Fig.11

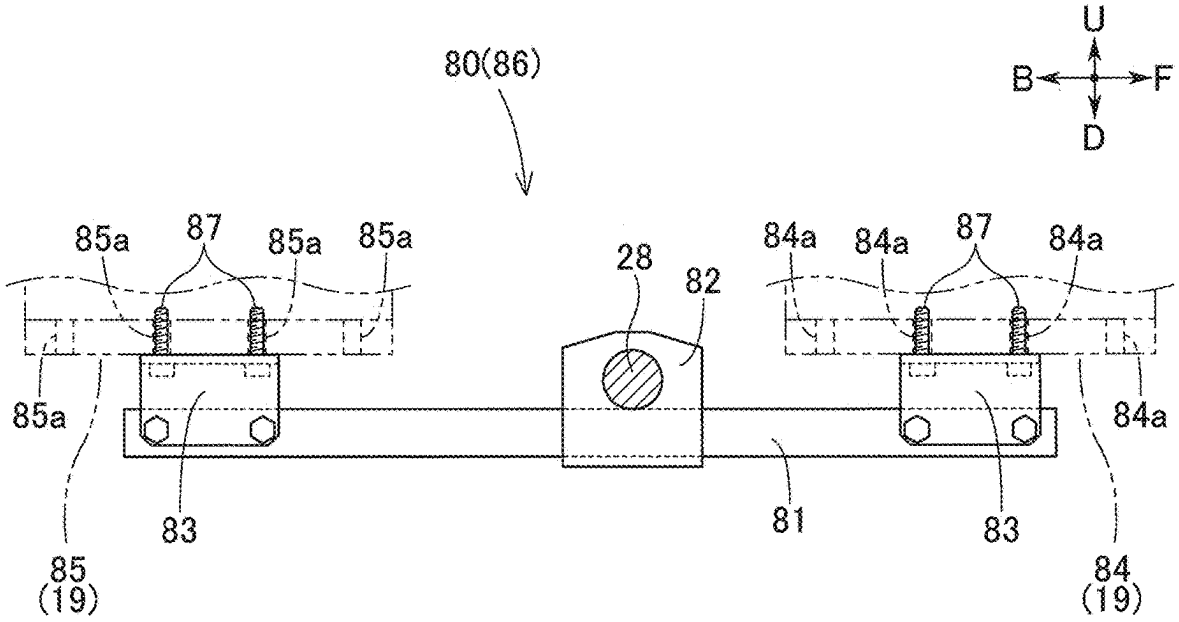
80(86)
U
B
F
D
85a
87
85a
85a
28
82
84a
84a
87
84a
85a
84a
83
81
83
85
(19)
84
(19)

Fig.12

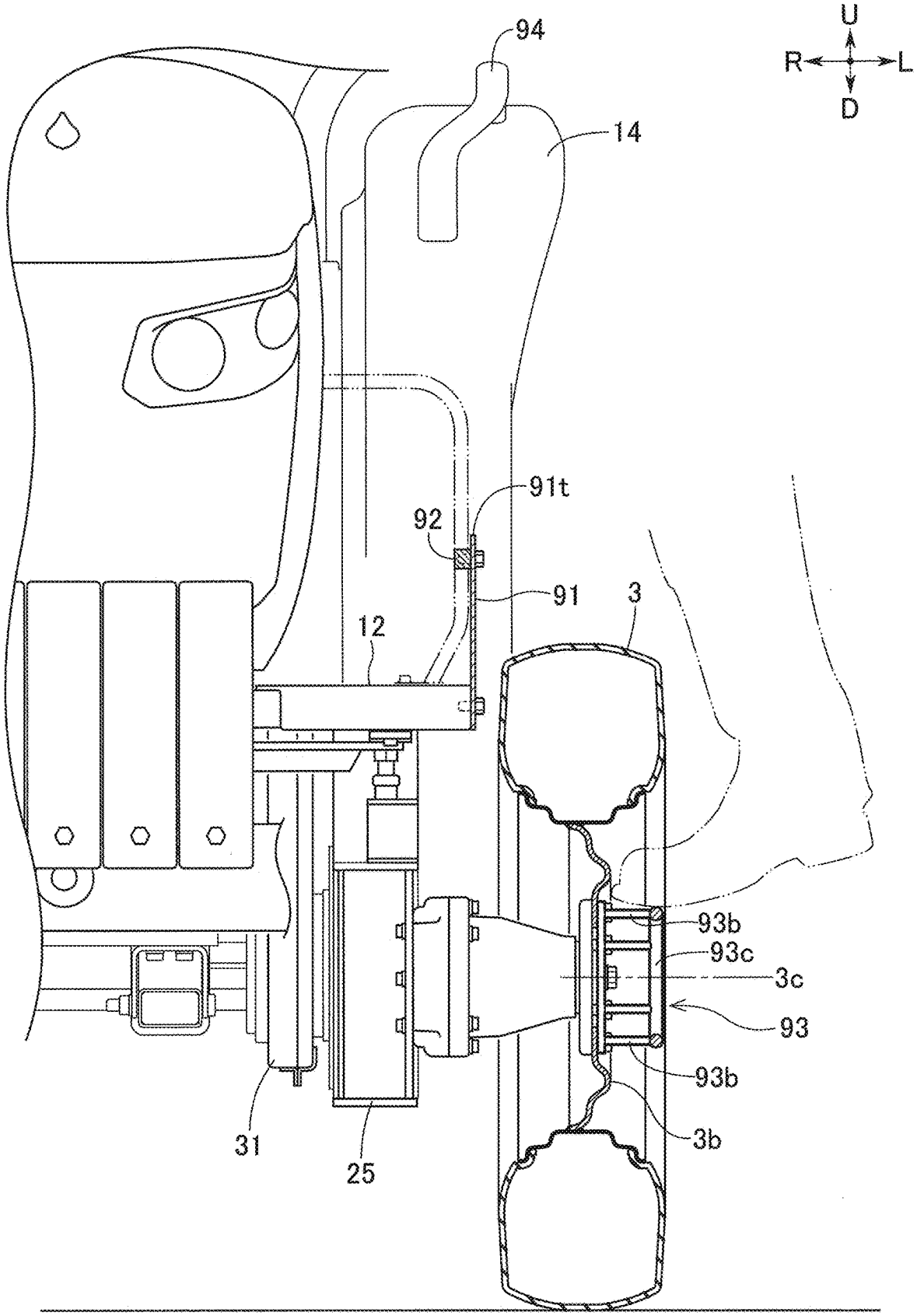

Fig.13

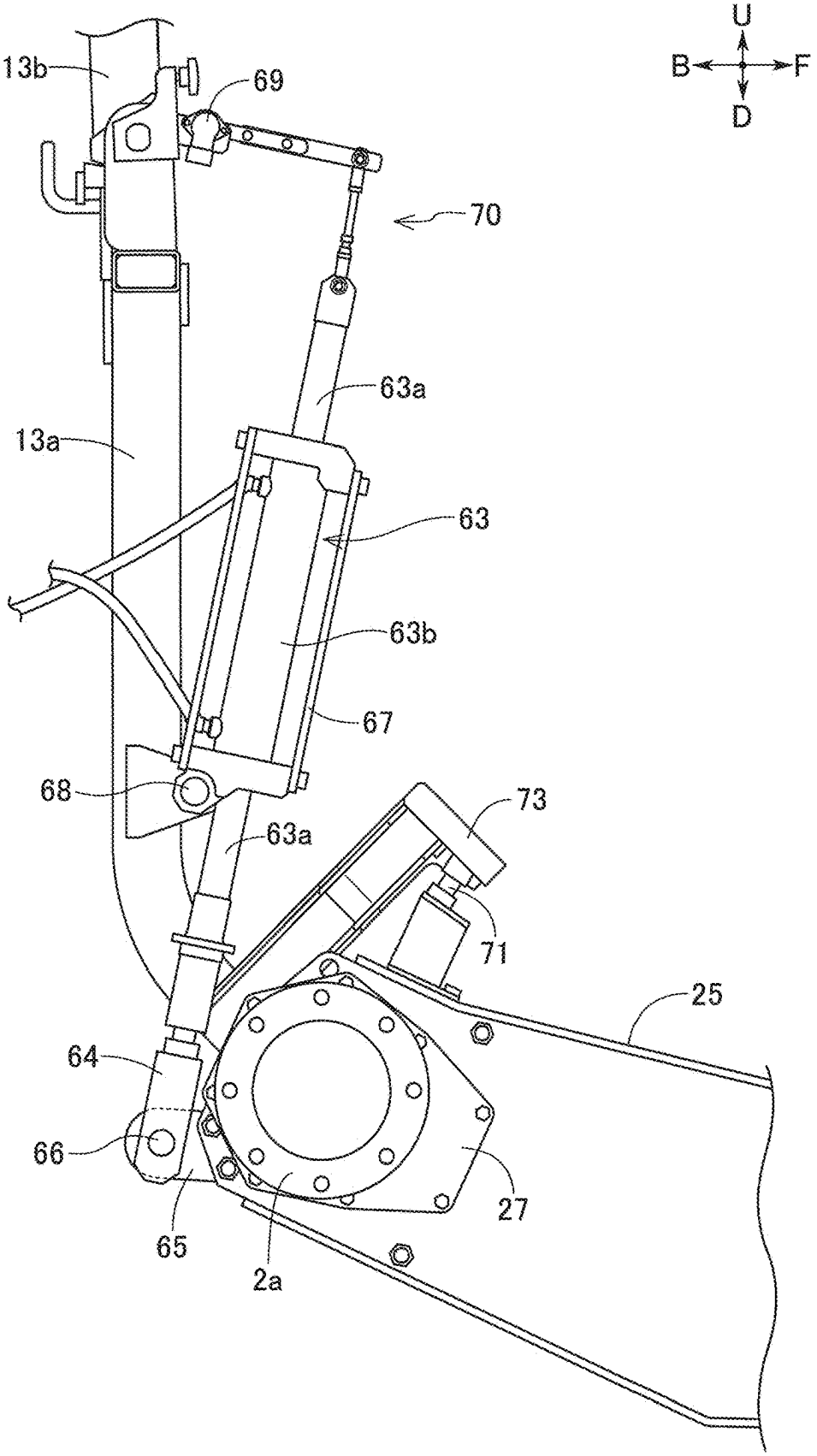

Fig.14

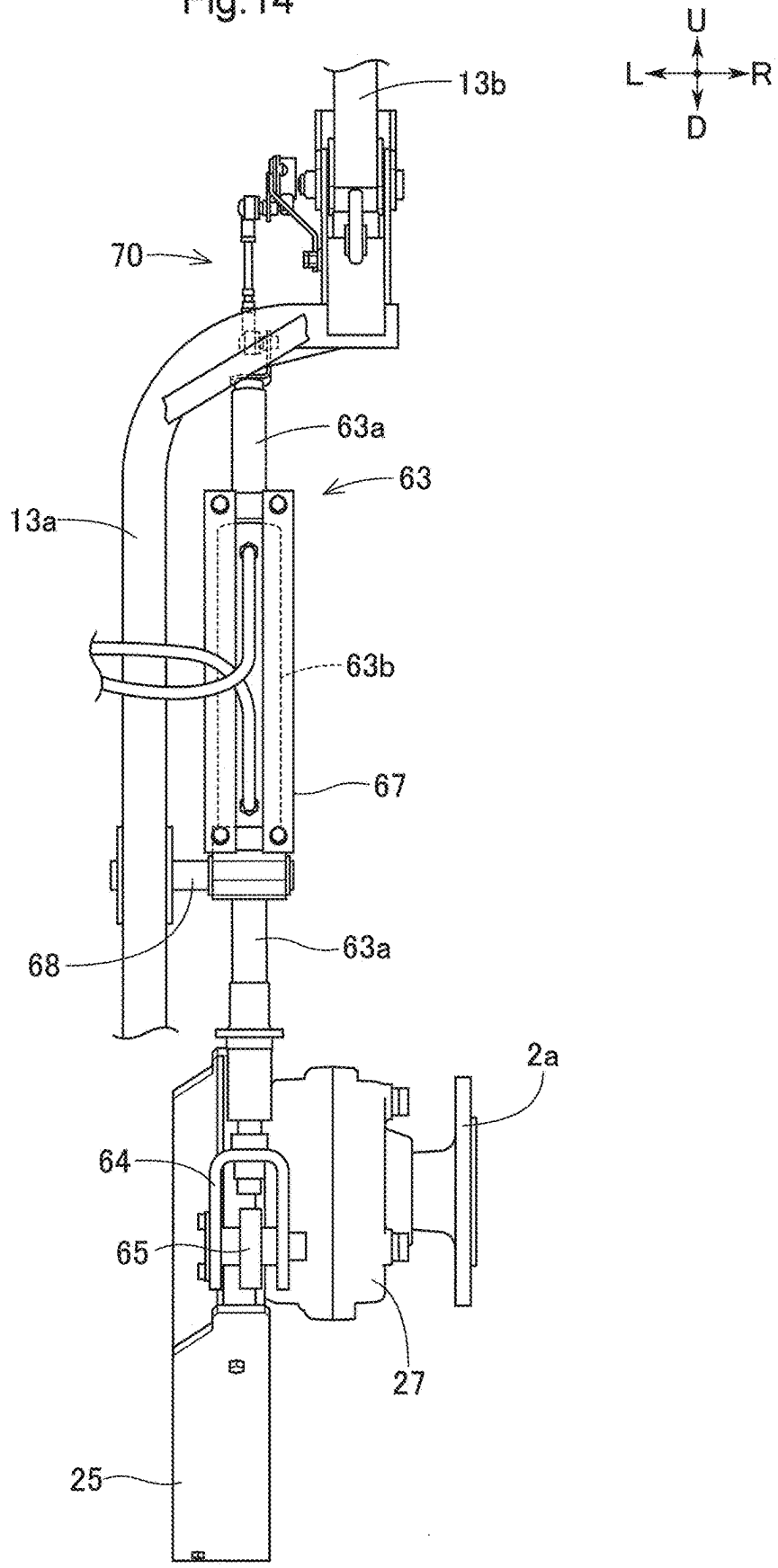

Fig.15

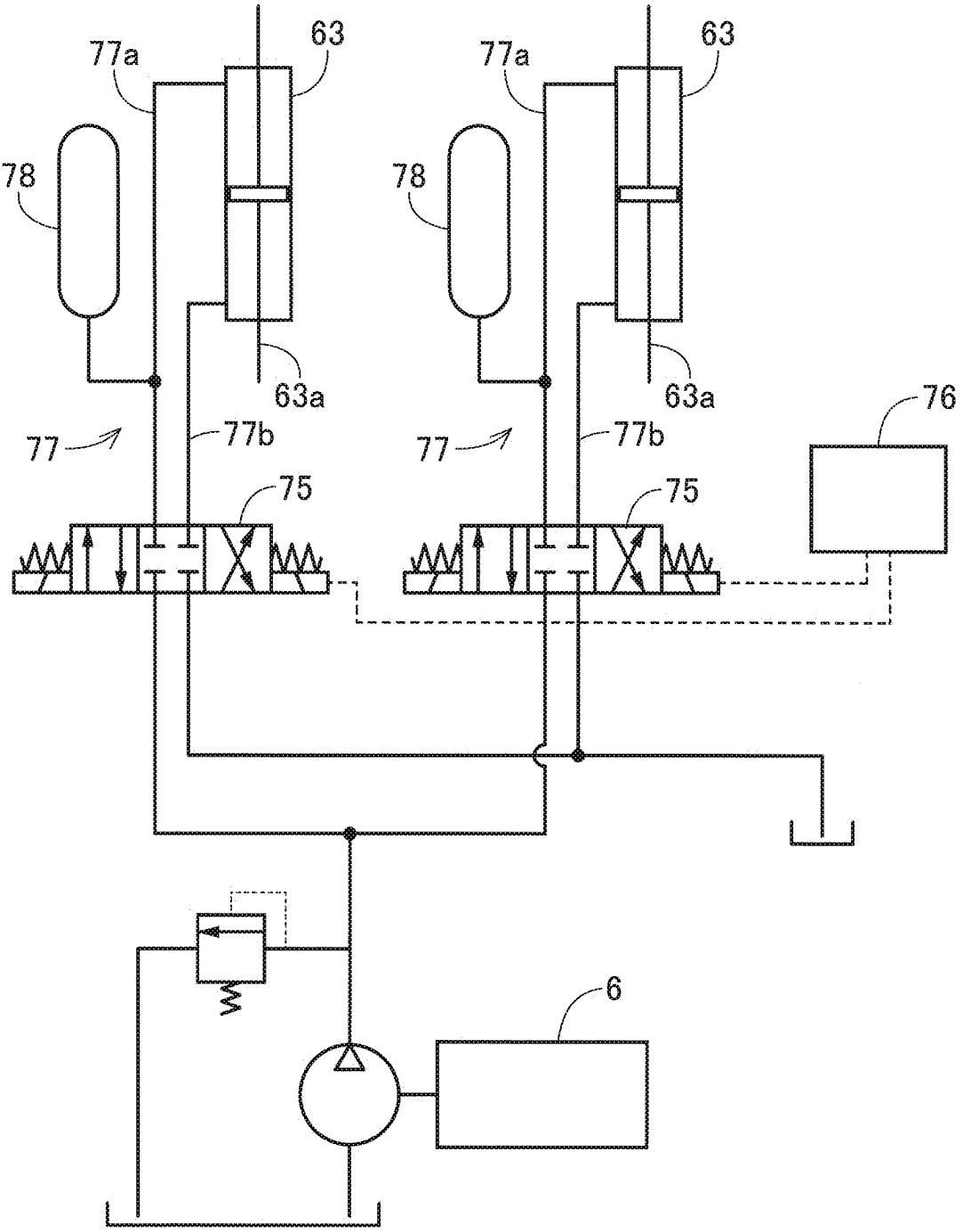

Fig.16

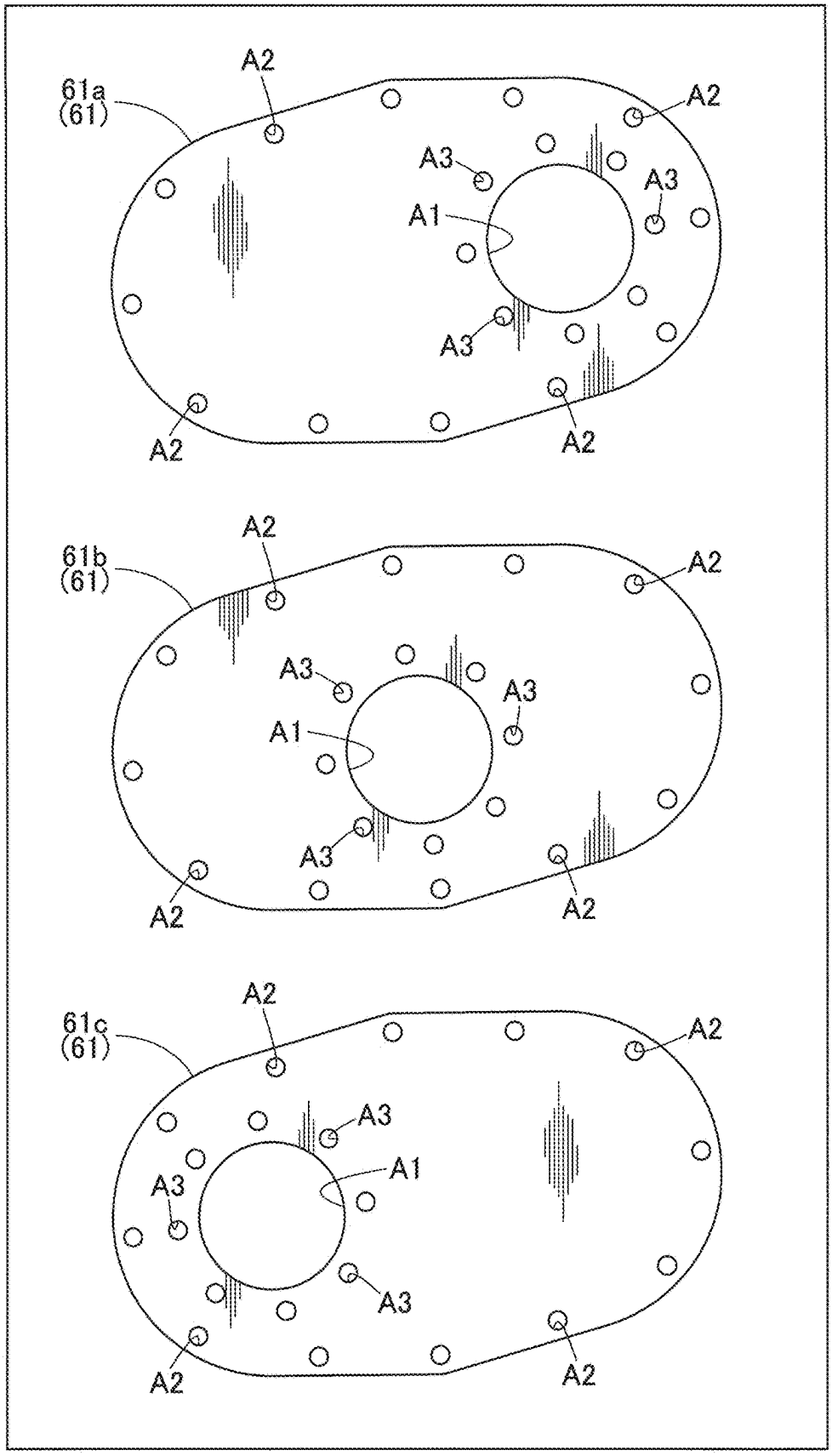
61a
(61)
A2
A2
A3
A3
A1
A3
A2
A2
61b
(61)
A2
A2
A3
A3
A1
A3
A2
A2
61c
(61)
A2
A2
A3
A1
A3
A3
A2
A2

Fig.17

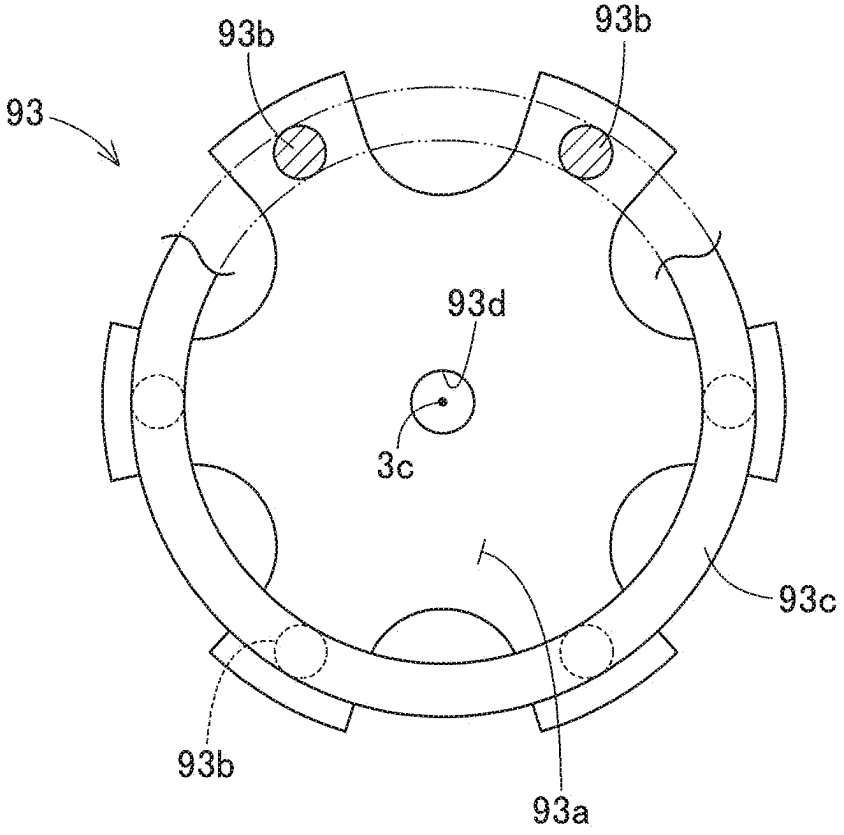

Fig.18

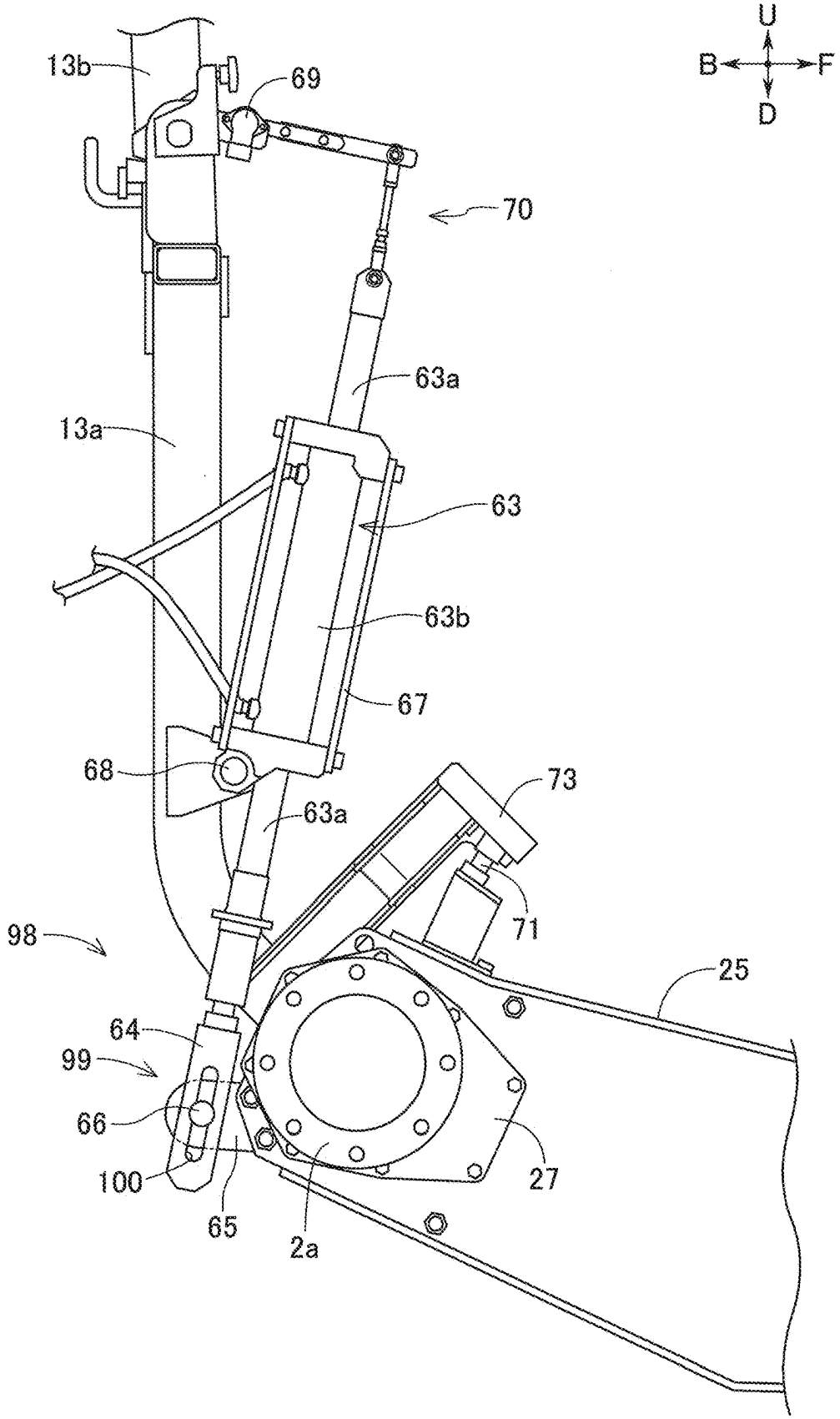
U
B
F
D
13b
69
70
63a
13a
63
63b
67
68
73
63a
71
98
25
64
99
66
100
65
2a
27

Fig.19

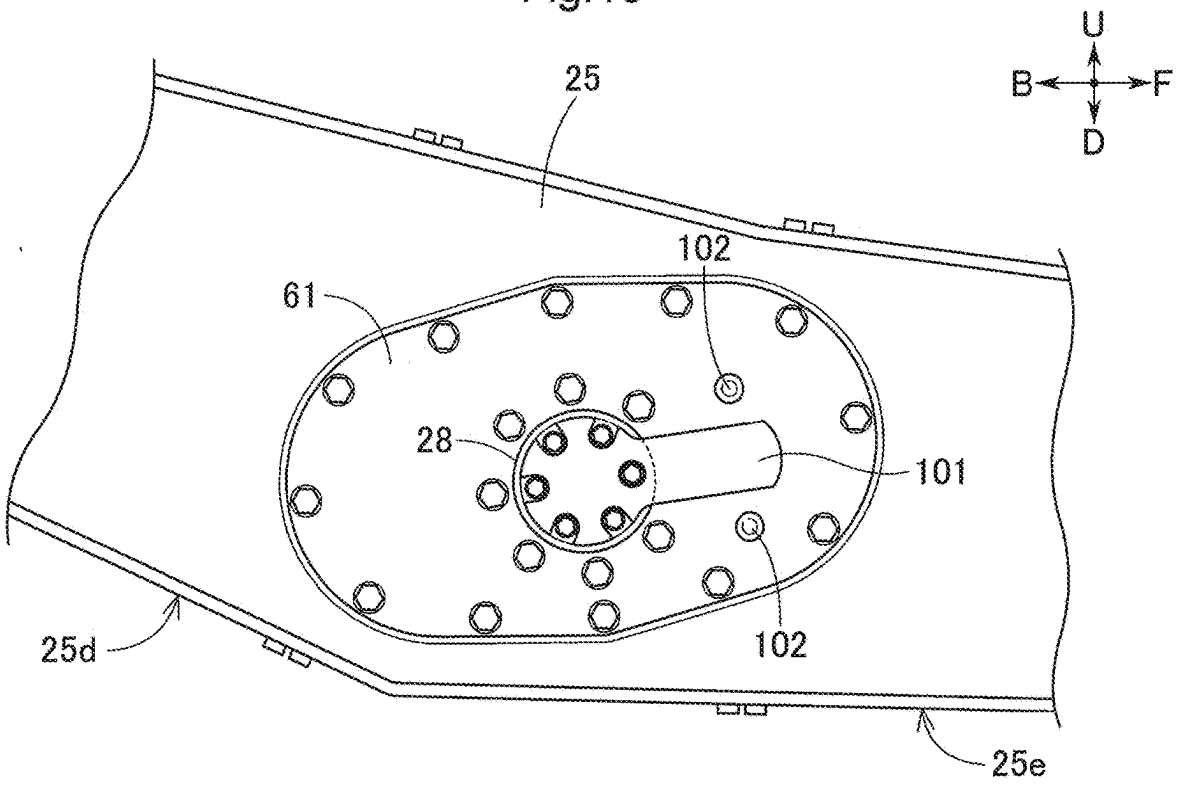
U
B
F
D
25
102
61
28
101
102
25d
25e

Fig.20

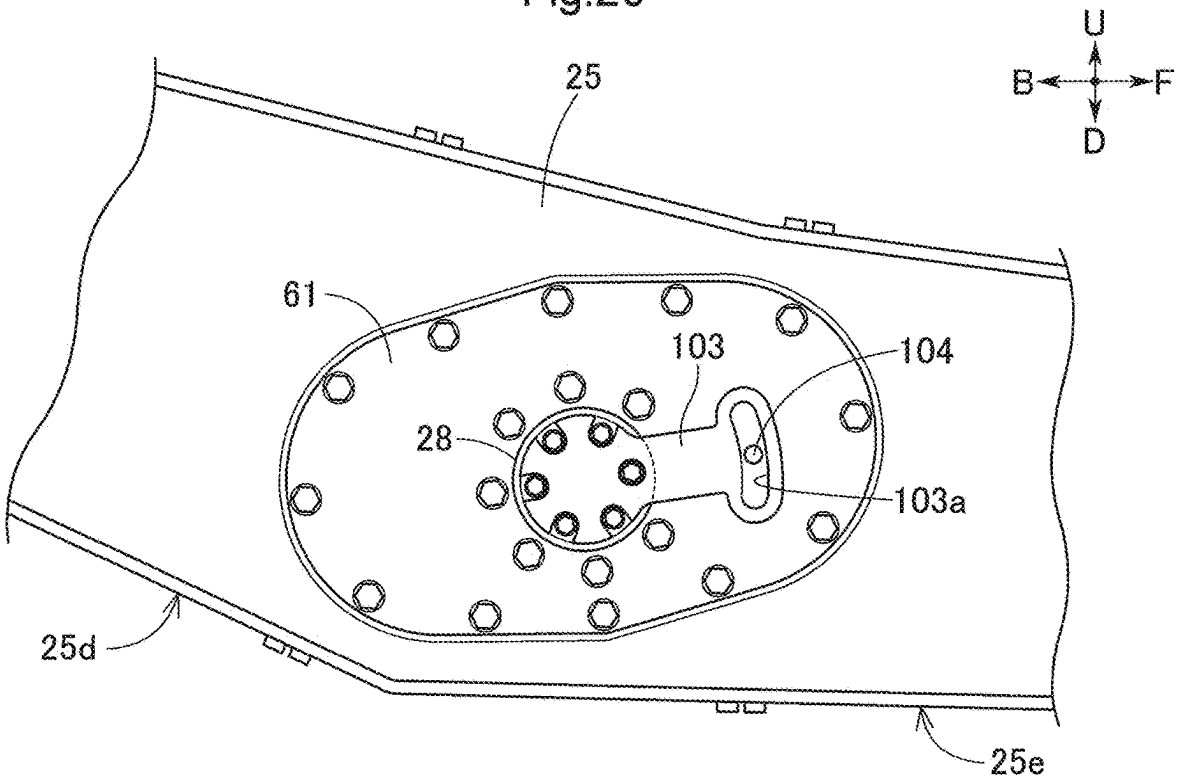
U
B
F
D
25
61
103
104
28
103a
25d
25e

Fig.21

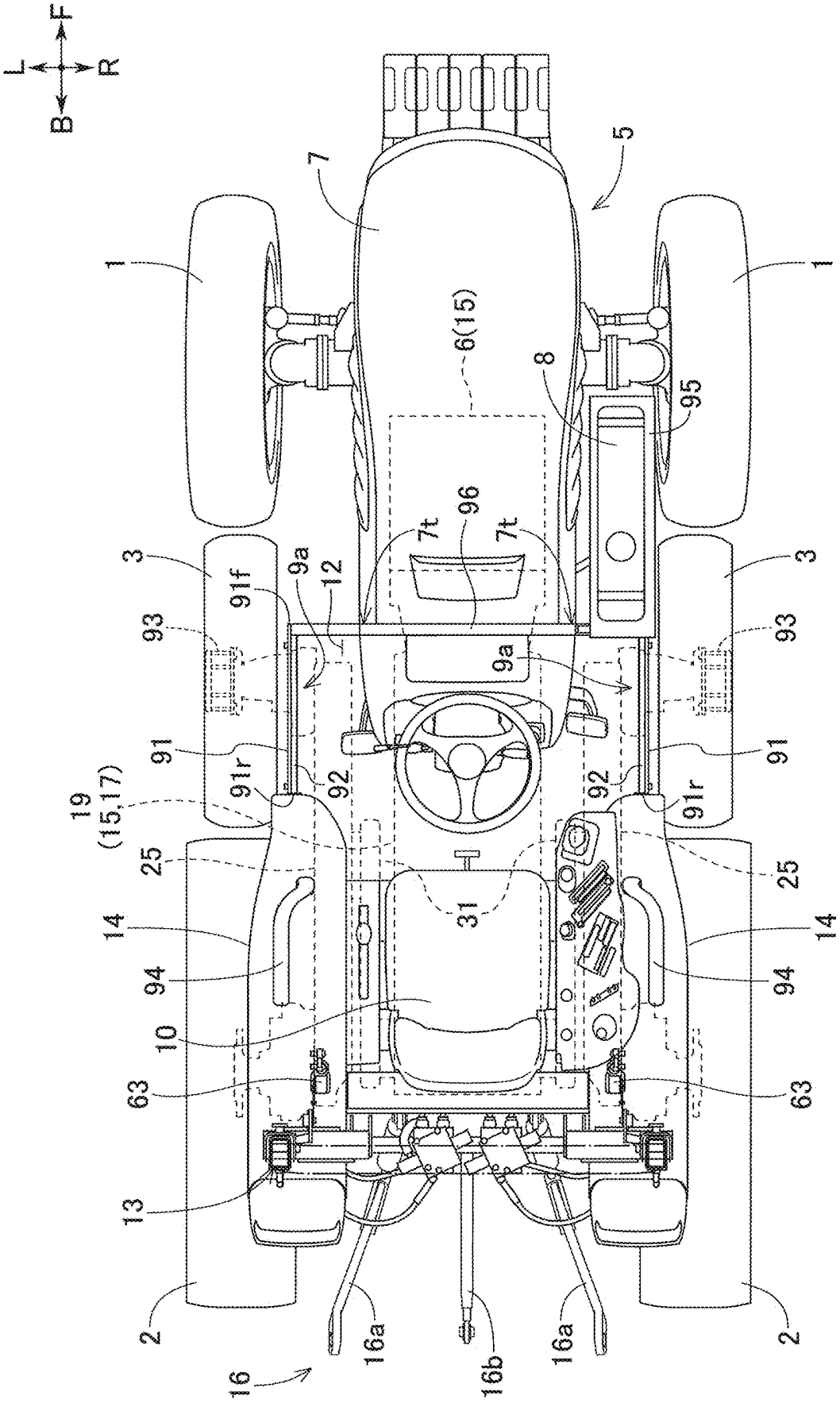
F
L
R
B
5
7
1
1
6(15)
8
95
96
7t
7t
3
3
91f
9a
12
93
93
9a
91
91
91r
92
92
91r
19
(15,17)
25
25
31
14
14
94
94
10
63
63
13
2
2
16a
16b
16a
16

Fig.22

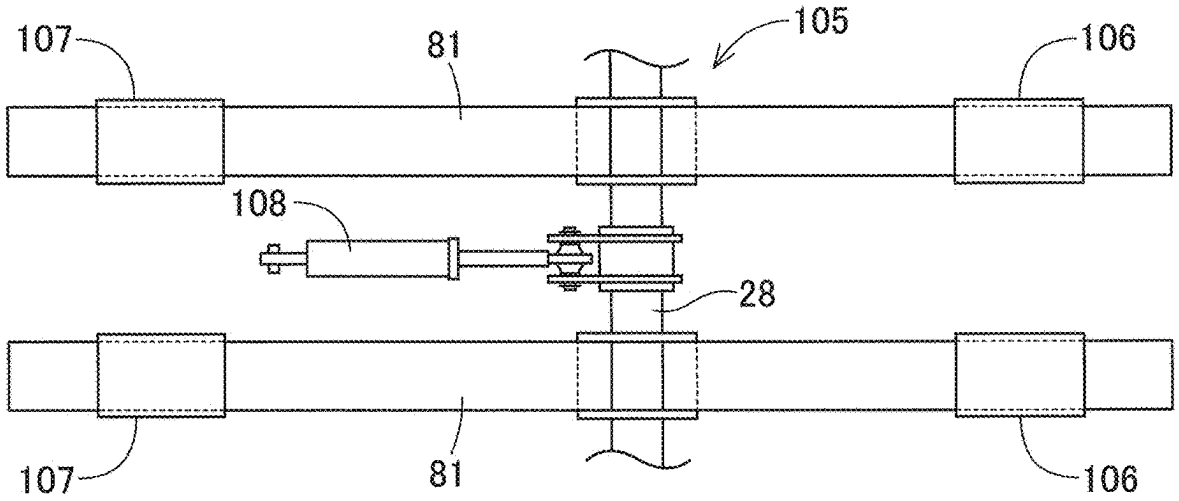
107
81
105
106
108
28
107
81
106

Fig.23

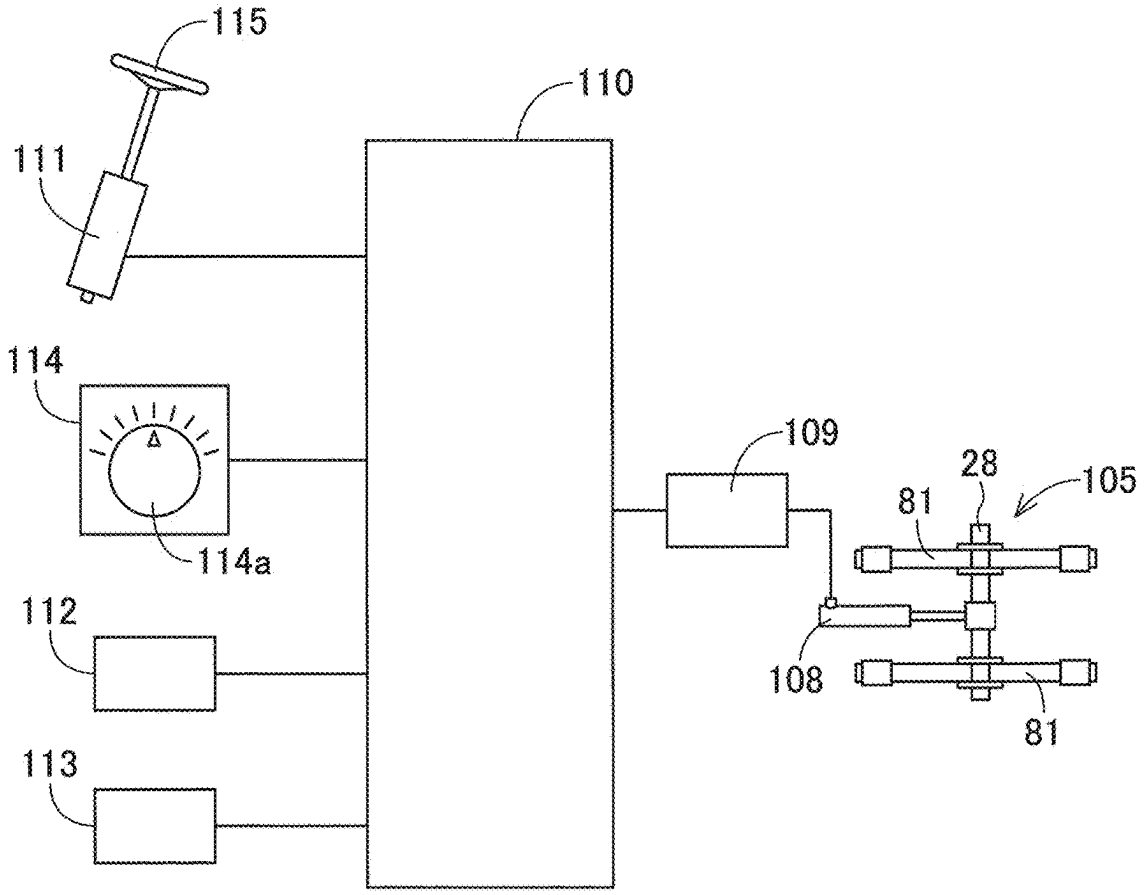
115
110
111
114
114a
109
28
105
81
112
108
81
113

WORK MACHINE

CROSS REFERENCE TO RELATED APPLICATIONS

This application claims the benefit of priority to Japanese Patent Applications JP2023-217420, JP2023-217421 and JP2023-217422 respectively filed on Dec. 22, 2023. The entire contents of each application are hereby incorporated herein by reference.

BACKGROUND OF THE INVENTION

1. Field of the Invention

The present invention relates to work machines and agricultural machines.

2. Description of the Related Art

JP2014-125107A describes a tractor (a work machine and an agricultural machine) including a vehicle body frame (a body frame), an engine hood provided for a front portion of the vehicle body frame, front wheels supported by the front portion of the vehicle body frame so as to be rotatable, and rear wheels supported by a rear portion of the vehicle body frame so as to be rotatable.

In a case where a vehicle body of such a work machine sinks or skids due to a working ground being a damp ground, an uneven ground, or the like, a work depth changes, or its work results in poor finish.

Example embodiments of the present invention provide work machines each of which can perform work while the work machine is traveling in a state where a vehicle body is less likely to sink or skid and which can be achieved at a low cost. In addition, example embodiments of the present invention provide work machines each of which can travel and perform work in a state where a vehicle body is less likely to sink and which can be easily subjected to maintenance.

In the meantime, in a case where the front wheel of such an agricultural machine falls into a recess of a traveling path and a travel resistance is applied to the front wheel, the travel resistance to the front wheel becomes strong due to a load of a motor section being applied to the front wheel, so that the rear wheels easily skid. The damp ground particularly easily causes a skid. When a skid occurs, the work results in poor finish.

Example embodiments of the present invention provide agricultural machines each of which can travel in a state where the agricultural machine is less likely to skid, which can easily turn, and which can be easily achieved at a low cost.

SUMMARY OF THE INVENTION

A work machine according to an example embodiment of the present invention includes a front wheel, a rear wheel, an intermediate wheel between the front wheel and the rear wheel, and a transmission to receive a driving force from a drive source and transmit the driving force to the intermediate wheel and at least one of the front wheel or the rear wheel that is drivable as a driving wheel. The intermediate wheel has an outside diameter smaller than an outside diameter of the driving wheel.

In this configuration, the intermediate wheel and at least one of the front wheel or the rear wheel are driven to cause

the vehicle body to travel with the front wheel, the rear wheel, and the intermediate wheel being grounded and supporting the vehicle body. As a result, the vehicle body is less likely to sink or skid. In comparison with a support structure of a crawler belt in a case where a crawler is used, a support structure for the front wheel, the rear wheel, and the intermediate wheel is simplified. In addition, the driving force from the transmission is commonly used for the drive of the at least one of the front wheel or the rear wheel and the drive of the intermediate wheel, so that a drive structure is simplified. Besides, the outside diameter of the intermediate wheel is smaller than the outside diameter of the at least one of the front wheel or the rear wheel, so that the cost of the intermediate wheel is reduced. That is, with this configuration, it is possible to achieve a work machine that can travel and work with the vehicle body being less likely to sink or skid, with an inexpensive configuration.

In an example embodiment of the present invention, a work machine may further include a vehicle body frame including the transmission to transmit the driving force to the at least one of the front wheel or the rear wheel, and a retention frame holding the intermediate wheel such that the intermediate wheel is rotatable and capable of transmitting the driving force from the transmission to the intermediate wheel.

In this configuration, the driving force from the transmission is transmitted to the intermediate wheel via the retention frame supporting the intermediate wheel. Thus, a power transmission to transmit power to the intermediate wheel is also used as the retention frame, thus making it possible to reduce the number of components and to achieve an inexpensive configuration.

In an example embodiment of the present invention, the retention frame may include an intermediate wheel holder holding the intermediate wheel such that the intermediate wheel is rotatable, a wheel holder holding at least one wheel out of the front wheel and the rear wheel such that the at least one wheel is rotatable, and a pivot shaft provided for an intermediate portion of the retention frame which intermediate portion is between the intermediate wheel holder and the wheel holder, the pivot shaft being coupled to the vehicle body frame.

In this configuration, when the pivot shaft is coupled to the vehicle body frame, the retention frame can be coupled to the vehicle body frame, and the intermediate wheel can be attached to the vehicle body frame. Since the pivot shaft is between the wheel holder and the intermediate wheel holder, the pivot shaft is easily coupled to the vehicle body frame, so that the intermediate wheel is easily supported by the vehicle body frame.

In an example embodiment of the present invention, a work machine may further include a wheel power transmission provided for the retention frame to transmit the driving force from the transmission to the at least one wheel held by the wheel holder, and an intermediate-wheel power transmission provided for the retention frame to transmit the driving force from the transmission to the intermediate wheel.

In this configuration, the retention frame is utilized to support the wheel power transmission and the intermediate-wheel power transmission. This makes it possible to reduce the number of components and to achieve an inexpensive configuration.

In an example embodiment of the present invention, a work machine may further include an input section provided for the pivot shaft to receive the driving force from the transmission. The driving force from the input section may

be transmitted to the wheel power transmission, and the driving force from the input section may be transmitted to the intermediate-wheel power transmission.

In this configuration, the input section receives the driving force from the transmission and transmits the driving force to the wheel power transmission and the intermediate-wheel power transmission. Accordingly, in comparison with a case where the driving force from the transmission is transmitted individually to the wheel power transmission and the intermediate-wheel power transmission, it is possible to reduce the number of required input sections and to achieve an inexpensive configuration.

In an example embodiment of the present invention, the retention frame may include the wheel holder to hold the at least one wheel out of the front wheel or the rear wheel such that the at least one wheel is rotatable.

In this configuration, the retention frame supports the intermediate wheel and at least one wheel out of the front wheel and the rear wheel. Accordingly, the at least one wheel and the intermediate wheel are both attached to the vehicle body frame via the retention frame. Thus, it is not necessary to separately provide a wheel retention frame via which the at least one wheel is supported by the vehicle body frame and an intermediate-wheel retention frame via which the intermediate wheel is supported by the vehicle body frame. As a result, it is possible to reduce troubles caused by an operation to support the at least one wheel and the intermediate wheel by the vehicle body frame, thus making it possible to achieve an inexpensive configuration.

In an example embodiment of the present invention, a work machine may further include a power transmission to receive the driving force from the transmission and transmit the driving force thus received to the input section. The power transmission may be capable of being braked.

In this configuration, when the power transmission is braked, a braking force applied to the power transmission is transmitted to the input section. The braking force applied to the power transmission is transmitted from the input section to the wheel via the wheel power transmission so that the wheel is braked, and the braking force applied to the power transmission is also transmitted from the input section to the intermediate wheel via the intermediate-wheel power transmission so that the intermediate wheel is braked. For example, an operator or the like can brake the wheel and the intermediate wheel just by a simple operation to brake the power transmission.

In an example embodiment of the present invention, the wheel power transmission and the intermediate-wheel power transmission may each include an endless roller chain.

In this configuration, the wheel power transmission and the intermediate-wheel power transmission each perform power transmission with use of the endless roller chain. Accordingly, in comparison with a configuration in which the wheel power transmission and the intermediate-wheel power transmission each perform power transmission with use of an interlocking rod, the wheel power transmission and the intermediate-wheel power transmission become lightweight and compact.

In an example embodiment of the present invention, the wheel power transmission and the intermediate-wheel power transmission may each include a gear transmission section.

In this configuration, the transmission ratio or the transmission rotation direction of a transmission gear in the gear transmission section is adjusted. As a result, power output from the input section is changed in rotation speed or rotation direction via the gear transmission section and transmitted to the intermediate wheel or the wheel. Accordingly, the driving speed or the rotation direction of the intermediate wheel or the wheel is easily adjusted by the gear transmission section.

In an example embodiment of the present invention, the gear transmission section may change a rotation direction of power from the input section so as to cause the at least one wheel and the intermediate wheel held by the intermediate wheel holder to rotate in a direction reverse to a rotation direction of the input section, and output the power.

In this configuration, the wheel and the intermediate wheel can be driven in a rotation direction reverse to the rotation direction of the power output from the input section.

In an example embodiment of the present invention, the retention frame may be supported by the vehicle body frame so as to be swingable around a pivot shaft axis of the pivot shaft as a swing axis which pivot shaft axis extends along a width of a body of the work machine.

In this configuration, the retention frame swings around the pivot shaft axis as a swing pivot. As a result, the state of the intermediate wheel is switched between a grounded state where the intermediate wheel swings relative to the vehicle frame to be lowered and grounded and an ungrounded state where the intermediate wheel swings relative to the vehicle frame to be lifted from the ground. When the intermediate wheel is switched to the grounded state, the front wheel, the rear wheel, and the intermediate wheel are grounded and support the vehicle body. As a result, the work machine easily travels straight and can travel while the work machine is less likely to sink or skid. When the intermediate wheel is switched to the ungrounded state, only the front wheel and the rear wheel are grounded and support the vehicle body. As a result, in comparison with a case where the front wheel, the rear wheel, and the intermediate wheel are grounded, the work machine has a small turning resistance, so that the work machine easily turns.

In an example embodiment of the present invention, the wheel holder may hold the rear wheel.

In this configuration, the rear wheel swings relative to the vehicle body frame to be lifted and lowered in response to vertical swinging of the retention frame relative to the vehicle body frame. When the rear wheel swings to be lowered, the rear wheel pushes up the vehicle body frame with the ground as a reaction force point. Accordingly, the vehicle body is changed to a posture where the rear side of the vehicle body is lifted (a rear lifting posture).

In an example embodiment of the present invention, the retention frame may include a wheel-side portion and an intermediate-wheel-side portion, the wheel-side portion extending from the intermediate portion toward the wheel holder, the intermediate-wheel-side portion extending from the intermediate portion toward the intermediate wheel holder, and in a side view of a body of the work machine, the wheel-side portion is higher in position than the intermediate-wheel-side portion, and the wheel-side portion is inclined away from the intermediate portion.

In this configuration, in a state where the intermediate wheel and the at least one wheel are grounded, a retention frame having a shape with a small useless portion is achieved as a retention frame supporting the intermediate wheel and the at least one wheel having an axle center higher in position than the axle center of the intermediate wheel. This makes it possible to achieve an inexpensive configuration.

A work machine according to an example embodiment of the present invention includes a boarding operation section

provided for a rear portion of a body of the work machine, a front wheel, a rear wheel, an intermediate wheel between the front wheel and the rear wheel, and a retention frame provided laterally outward of a body frame of the work machine and holding the intermediate wheel and the rear wheel. The retention frame extends in a front-rear direction below the operation section in a side view of the vehicle body.

In this configuration, when the vehicle body is supported with the front wheel, the rear wheel, and the intermediate wheel being grounded, the vehicle body is less likely to sink in comparison with a case where only the front wheel and the rear wheel are grounded. In comparison with a support structure of a crawler belt in a case where a crawler is used, a support structure for the rear wheel and the intermediate wheel is simplified. The retention frame is provided laterally outward of the vehicle body frame and extends in the front-rear direction below the operation section in the front-rear direction in a side view of the vehicle body. Accordingly, in addition to the support structure or the like for the rear wheel and the intermediate wheel being simplified, an operator or the like easily performs inspection or maintenance on the support structure or the like from laterally outward of the vehicle body or below the vehicle body, for example. That is, with this configuration, the work machine can travel and work with the vehicle body being less likely to sink, and besides, a maintenance operation is easily performed.

In an example embodiment of the present invention, the retention frame may have a center in the front-rear direction which center is rearward of a center of the vehicle body frame in the front-rear direction.

In this configuration, the rear wheel is disposed in a rearward portion of the vehicle body. In a case where the rear wheel is disposed in the rearward portion of the vehicle body, at the time when a work device is towed, for example, the rear portion of the vehicle body which rear portion receives a load is firmly supported by the rear wheel, so that the work machine easily travels while towing the work device.

In an example embodiment of the present invention, a work machine may further include a pivot shaft including a pivot shaft axis extending along a width of the body. The retention frame may be coupled to the vehicle body frame via the pivot shaft and held by the vehicle body frame so as to be swingable around the pivot shaft axis as a swing axis, and the intermediate wheel and the rear wheel may be attached to the vehicle body frame via the retention frame so as to be vertically swingable.

In this configuration, the intermediate wheel and the rear wheel are lifted and lowered relative to the vehicle body frame around the pivot shaft axis as a swing axis in response to swinging of the retention frame. The swinging of the retention frame can switch the intermediate wheel and the rear wheel between a state where the intermediate wheel and the rear wheel are both grounded and a state where the intermediate wheel is ungrounded but the rear wheel is grounded.

In an example embodiment of the present invention, a work machine may further include an actuator to operate the retention frame. The actuator may be capable of changing the retention frame between a first posture in which the intermediate wheel and the rear wheel are grounded and a second posture in which the intermediate wheel is ungrounded.

In this configuration, when the retention frame is switched to the first posture, the intermediate wheel and the rear wheel are grounded. In this state, the vehicle body is supported with the front wheel, the rear wheel, and the intermediate wheel being grounded, the work machine can easily travel straight. When the retention frame is switched to the second posture, the rear wheel is grounded, but the intermediate wheel is ungrounded. In this state, the vehicle body is supported with only the front wheel and the rear wheel being grounded, so that the vehicle body has a small turning resistance in comparison with a state where the front wheel, the intermediate wheel, and the rear wheel are grounded. As a result, the work machine easily turns. A work machine can travel while the work machine selects a state where the work machine easily travels straight or a state where the work machine easily turns.

In an example embodiment of the present invention, a work machine may further include a coupler to couple a work device with the vehicle body so as to allow the vehicle body to tow the work device.

In this configuration, the work machine can tow a work device by coupling the work machine to the work device by the coupler. The work machine can travel while the work machine tows the work device so as to cause the work device to work.

The above and other elements, features, steps, characteristics and advantages of the present invention will become more apparent from the following detailed description of the example embodiments with reference to the attached drawings.

BRIEF DESCRIPTION OF THE DRAWINGS

FIG. **1** is a side view of a tractor viewed from a right side.

FIG. **2** is a plan view of the tractor.

FIG. **3** is a side view of the tractor viewed from the right side with intermediate wheels being grounded.

FIG. **4** is a side view of the tractor viewed from the right side with the intermediate wheels being ungrounded.

FIG. **5** is a bottom plan view illustrating a support structure for front wheels, the intermediate wheels, and rear wheels.

FIG. **6** is an explanatory drawing illustrating an upstream transmission, a wheel power transmission, and an intermediate-wheel power transmission.

FIG. **7** is a side view illustrating a retention frame with no cover as viewed from the right side.

FIG. **8** is a side view illustrating the wheel power transmission and the intermediate-wheel power transmission.

FIG. **9** is a side view illustrating the upstream transmission.

FIG. **10** is a sectional view of an attachment structure for the retention frame.

FIG. **11** is a side view of a pivot shaft change mechanism.

FIG. **12** is a front view of a cover and a footboard.

FIG. **13** is a side view of a retention frame swinging structure.

FIG. **14** is a rear view of the retention frame swinging structure.

FIG. **15** is a hydraulic circuit diagram of a hydraulic cylinder.

FIG. **16** is a side view of a cover.

FIG. **17** is a side view of the footboard.

FIG. **18** is a side view of a coupling mechanism for a hydraulic cylinder and a retention frame in an alternative example embodiment of the present invention.

FIG. **19** is a side view of a retention frame swing range determination structure in an alternative example embodiment of the present invention.

FIG. **20** is a side view of a retention frame swing range determination structure in another alternative example embodiment of the present invention.

FIG. **21** is a plane view illustrating a fuel tank installation structure in an alternative example embodiment of the present invention.

FIG. **22** is a plane view of a pivot shaft change mechanism in an alternative example embodiment of the present invention.

FIG. **23** is a block diagram of a pivot shaft change control.

DETAILED DESCRIPTION OF THE EXAMPLE EMBODIMENTS

Example embodiments of the present invention will be described below with reference to the drawings. Note that, in the following description, in terms of a vehicle body of a tractor (an example of a "work machine" and an "agricultural machine), a direction of an arrow F illustrated in FIGS. **1**, **2** and so on is referred to as a "vehicle-body front side," a direction of an arrow B is referred to as a "vehicle-body rear side," a direction of an arrow U is referred to as a "vehicle-body upper side," a direction of an arrow D is referred to as a "vehicle-body lower side," a direction of an arrow L is referred to as a "vehicle-body left side," and a direction of an arrow R is referred to as a "vehicle-body right side." A vehicle body right-left direction corresponds to a vehicle-body width direction.

As illustrated in FIGS. **1**, **2**, the tractor includes a pair of right and left front wheels **1**, a pair of right and left rear wheels **2**, a pair of right and left intermediate wheels **3**, and a vehicle body **4**. The front wheels **1** are configured to be steerable and drivable. The rear wheels **2** and the intermediate wheels **3** are both configured to be drivable. The vehicle body **4** is supported by the pair of right and left front wheels **1**, the pair of right and left rear wheels **2**, and the pair of right and left intermediate wheels **3**. The front wheels **1**, the rear wheels **2**, and the intermediate wheels **3** are tire wheels. The vehicle body **4** has a front portion including a motor section **5**. The motor section **5** is provided with an engine **6**, an engine bonnet **7** covering the engine **6**, and so on. A fuel tank **8** for the engine is provided on the right side of the engine bonnet **7**. The vehicle body **4** has a rear portion including a riding-type operation section **9** on which a driver rides to operate the vehicle body. The operation section **9** does not include a so-called cabin and is open on all sides. As illustrated in FIGS. **1**, **2**, the operation section **9** includes an operation seat **10**, a steering wheel **11** configured to steer the front wheels **1**, a step **12** as a floor provided forward of and below the operation seat **10**, a ROPS **13**, and so on. Rear-wheel fenders **14** are provided laterally outward of both sides of the operation section **9** so as to cover respective rear wheels **2**. The ROPS **13** is provided rearward of the operation seat **10** so as to extend upward from a vehicle body frame **15**. A coupler **16** is provided rearward of the vehicle body frame **15**. The coupler **16** is tractably coupled to various work devices such as a rotary cultivating device (not illustrated).

As illustrated in FIGS. **1**, **6**, the vehicle body frame **15** includes the engine **6**, a transmission **17** extending rearward from a rear portion of the engine **6**, and a front frame **18** extending forward from a lower portion of the engine **6**. The transmission **17** includes a transmission case **19**. A travel transmission (not illustrated), a rear-wheel differential mechanism **20** (see FIG. **6**), and a work transmission (not illustrated) are provided inside the transmission case **19**. The travel transmission receives a driving force from the engine **6** as a drive source via a main clutch (not illustrated). The rear-wheel differential mechanism **20** receives an output from the travel transmission. The work transmission receives a driving force from the engine **6**. As illustrated in FIGS. **5**, **9**, a power extraction shaft **21** is provided rearward of the transmission case **19**. The power extraction shaft **21** is coupled to an input shaft (not illustrated) of a work device. The power extraction shaft **21** extracts power from the work transmission and transmits the power to the work device. As illustrated in FIGS. **6**, **7**, and so on, the transmission case **19** is dividable into a front case portion **19***a*, an intermediate case portion **19***b*, and a rear case portion **19***c*. The front case portion **19***a* is coupled to the engine **6**. The intermediate case portion **19***b* extends rearward from the rearward of the front case portion **19***a*. The rear case portion **19***c* extends rearward from the rearward of the intermediate case portion **19***b*.

As illustrated in FIGS. **2**, **9**, and so on, the coupler **16** includes lower links **16***a*, a top link **16***b*, and lift arms **16***c*. The lower links **16***a* are coupled to respective lateral sides of a rear portion of the transmission case **19** so as to be vertically swingable. The top link **16***b* is disposed above the lower links **16***a* and coupled to the transmission case **19** so as to be vertically swingable. The lift arms **16***c* are coupled to respective lateral sides of an upper portion of the transmission case **19** so as to be vertically swingable. The lift arm **16***c* is coupled to the lower link **16***a* via a lift rod **16***e*. In this example embodiment, a right lift rod **16***e* includes a rolling hydraulic cylinder.

When right and left lower links **16***a* and the top link **16***b* of the coupler **16** are each coupled to the work device, the work device is tractably coupled to the vehicle body **4**. When right and left lift arms **16***c* are operated to swing vertically due to expansion and contraction of respective hydraulic cylinders **16***d*, the lower links **16***a* are operated by respective lift arms **16***c* to swing vertically via respective lift rods **16***e*. As a result, the work device is lifted and lowered. When the right lower link **16***a* swings due to expansion and contraction of the rolling hydraulic cylinder, a rolling operation of the work device is performed.

As illustrated in FIGS. **5**, **6**, a front axle case **23** including a front axle **1***a* is provided in each end of a front wheel drive case **22** extending in the vehicle-body width direction, under the front frame **18**. The front wheel **1** is held by the front axle **1***a*. The front wheel drive case **22** is coupled to the front frame **18** so as to be swingable vertically around a rolling axis X as a swing pivot which rolling axis X is at a central portion of the front wheel drive case **22** in the vehicle-body width direction and extends along the vehicle-body front-rear direction. The right and left front wheels **1** are held by the vehicle body frame **15** via respective front axle cases **23** and the front wheel drive case **22**. The right and left front wheels **1** are rollable around the rolling axis X relative to the vehicle body frame **15**.

The front axle case **23** is coupled to the front wheel drive case **22** so as to be swingable around a steering axis as a swing pivot which steering axis extends in the vehicle-body up-down direction. When the steering wheel **11** is rotated, the front axle case **23** swings around the steering axis relative to the front wheel drive case **22**. As a result, the right and left front wheels **1** are steered to right and left.

As illustrated in FIG. **5**, a rotating shaft **24** is extended forward from the transmission **17** and is coupled to the front wheel drive case **22**. Power from the engine **6** as a drive source is input into the travel transmission of the transmission **17**. The power is input into a front-wheel differential mechanism (not illustrated) inside the front wheel drive case **22** via the rotating shaft **24** and is transmitted from the

front-wheel differential mechanism to right and left front axles **1***a*. As a result, the right and left front wheels **1** are driven.

The right and left intermediate wheels **3** are supported by the vehicle body frame **15** based on the same support structure and are driven based on the same drive structure. The right and left rear wheels **2** are supported by the vehicle body frame **15** based on the same support structure and are driven based on the same drive structure. In the following description, in order to describe the support structure and the drive structure for the right and left intermediate wheels **3**, the support structure and the drive structure for the right and left rear wheels **2**, and so on, the right and left front wheels **1** are just referred to as the front wheel **1**, the right and left intermediate wheels **3** are just referred to as the intermediate wheel **3**, and the right and left rear wheels **2** are just referred to as the rear wheel **2**.

As illustrated in FIGS. **1**, **2**, the intermediate wheel **3** is between the front wheel **1** and the rear wheel **2**. The front wheel **1**, the intermediate wheel **3**, and the rear wheel **2** are arranged in the vehicle-body front-rear direction. The intermediate wheel **3** is placed within the width of the front wheel **1** and within the width of the rear wheel **2** in a region between the front wheel **1** and the rear wheel **2**. In this example embodiment, the intermediate wheel **3** is placed within the width of the front wheel **1** and within the width of the rear wheel **2** but is not limited to this, and the intermediate wheel **3** may project laterally outwardly or laterally inwardly in the vehicle-body width direction from both or either of the front wheel **1** and the rear wheel **2**. The intermediate wheel **3** has an outside diameter smaller than the outside diameter of the rear wheel **2**. The outside diameter of the intermediate wheel **3** is smaller than the outside diameter of the front wheel **1**. The outside diameter of the rear wheel **2** is larger than the outside diameter of the intermediate wheel **3** and is larger than the outside diameter of the front wheel **1**. The outside diameter of the front wheel **1**, the outside diameter of the intermediate wheel **3**, and the outside diameter of the rear wheel **2** each include a rubber lug portion provided in an outer peripheral portion of a tire.

As illustrated in FIGS. **1**, **2**, **4**, **5**, and so on, a retention frame **25** is provided laterally outward of the vehicle body frame **15**. The intermediate wheel **3** and the rear wheel **2** are held by the vehicle body frame **15** via the retention frame **25**. The retention frame **25** holds the intermediate wheel **3** such that the intermediate wheel **3** is rotatable, and the retention frame **25** also holds the rear wheel **2** such that the rear wheel **2** is rotatable.

More specifically, as illustrated in FIGS. **3**, **5**, an intermediate axle case **26** is provided for an intermediate wheel holder **25***a* in a front portion of the retention frame **25**. The intermediate axle case **26** includes an intermediate axle **3***a*. The intermediate axle case **26** is attached to the intermediate wheel holder **25***a*. As a result, the intermediate axle **3***a* is provided for the intermediate wheel holder **25***a*. Since the intermediate wheel **3** is held by the intermediate axle **3***a*, the intermediate wheel **3** is held by the intermediate wheel holder **25***a* so as to be rotatable and drivable.

As illustrated in FIGS. **3**, **5**, a rear axle case **27** is provided for a wheel holder **25***b* in a rear portion of the retention frame **25**. The rear axle case **27** includes a rear axle **2***a*. The rear axle case **27** is attached to the wheel holder **25***b*. As a result, the rear axle **2***a* is provided for the wheel holder **25***b*. Since the rear wheel **2** is held by the rear axle **2***a*, the rear wheel **2** is held by the wheel holder **25***b* so as to be rotatable and drivable.

As illustrated in FIGS. **3**, **5**, a pivot shaft **28** extending in the vehicle-body width direction is attached to an intermediate portion **25***c* of the retention frame **25** which intermediate portion **25***c* is placed between the intermediate wheel holder **25***a* holding the intermediate wheel **3** and the wheel holder **25***b* (a rear wheel holder) holding the rear wheel **2**. The pivot shaft **28** is coupled to the vehicle body frame **15**. The retention frame **25** is held by the vehicle body frame **15** via the pivot shaft **28**.

As illustrated in FIG. **5**, the pivot shaft **28** couples a left retention frame **25** holding the left intermediate wheel **3** and the left rear wheel **2** and a right retention frame **25** holding the right intermediate wheel **3** and the right rear wheel **2** to the vehicle body frame **15** on the same pivot shaft axis Y. That is, a shaft that couples the left retention frame **25** to the vehicle body frame **15** and a shaft that couples the right retention frame **25** to the vehicle body frame **15** are the same pivot shaft **28**.

As illustrated in FIGS. **3**, **7**, the retention frame **25** is positioned in an inclined manner such that the position of a wheel adjacent portion **25***d* extending rearward toward the wheel holder **25***b* from the intermediate portion **25***c* in a side view of the vehicle body is higher than the position of an intermediate-wheel adjacent portion **25***e* extending forward toward the intermediate wheel holder **25***a* from the intermediate portion **25***c*, and the wheel adjacent portion **25***d* becomes higher as it extends away from the intermediate portion **25***c*. In this example embodiment, the intermediate-wheel adjacent portion **25***e* is a front portion extending forward from the intermediate portion **25***c*, and the wheel adjacent portion **25***d* is a rear portion extending upward toward the rear side from the intermediate portion **25***c*. While the intermediate wheel **3** and the rear wheel **2** are grounded, the retention frame **25** supports the intermediate wheel **3** and the rear wheel **2** having an axle center placed higher than the axle center of the intermediate wheel **3**. Thus, the retention frame **25** has a shape without any useless portion, so that it is possible to reduce the component cost of the retention frame **25**.

As illustrated in FIGS. **2**, **3**, the retention frame **25** extends in the front-rear direction below the rear-wheel fender **14** while the retention frame **25** overlaps with the rear-wheel fender **14** in a plan view. The retention frame **25** is illustrated with a broken line in FIG. **2**. As seen in FIG. **2** and FIGS. **1**, **3**, a front end portion of the retention frame **25** does not overlap with the rear-wheel fender **14**, and other portions (a rear portion) of the retention frame **25** including its rear end but excluding the front end portion overlaps with the rear-wheel fender **14**. The front end portion of the retention frame **25** overlaps with the step **12** of the operation section **9**. The retention frame **25** is laterally outward of the vehicle body frame **15** in such manner as to be not too far away from the vehicle body frame **15**. This can restrain the width of the vehicle body from being too wide.

As illustrated in FIG. **3**, the retention frame **25** extends in the front-rear direction below the operation section **9** in a side view of the vehicle body. The retention frame **25** is illustrated with a solid line in FIG. **3**. As illustrated in FIG. **3**, in a side view of the vehicle body, the front end of the retention frame **25** is below the steering wheel **11**, and the rear end of the retention frame **25** is below the operation seat **10** of the operation section **9**. The right and left retention frames **25** are each illustrated with a broken line in FIG. **2**. As illustrated in FIG. **2**, the steering wheel **11** and the operation seat **10** are between the right and left retention frames **25** in a plan view.

As illustrated in FIGS. **3**, **5**, the retention frame **25** is disposed such that a center C**1** of the retention frame **25** in the front-rear direction is rearward of a center C**2** of the vehicle body frame **15** in the front-rear direction. In this example embodiment, as illustrated in FIG. **3**, the front end of the retention frame **25** is rearward of the center C**2** of the vehicle body frame **15** in the front-rear direction. However, the present invention is not limited to this, and the front end of the retention frame **25** may be forward of the center C**2** of the vehicle body frame **15** in the front-rear direction.

As illustrated in FIGS. **2**, **5**, the retention frame **25** extends in the front-rear direction in a space between the rear wheel **2** and the transmission case **19**. The retention frame **25** also extends in the front-rear direction in a space between the intermediate wheel **3** and the vehicle body frame **15**. As illustrated in FIGS. **5**, **6**, the retention frame **25** is between the intermediate axle case **26** and the transmission case **19** and between the rear axle case **27** and the transmission case **19**, in a plan view. The rear wheel **2** is laterally outward of the retention frame **25**, and the transmission case **19** is laterally inward of the retention frame **25**. Accordingly, the rear wheel **2** can be utilized as an outer guard to protect the retention frame **25** from a laterally outer side, and the transmission case **19** can be utilized as an inner guard to protect the retention frame **25** from a laterally inner side.

As illustrated in FIGS. **2**, **5**, the retention frame **25** is inward of the intermediate wheel **3** and the rear wheel **2** in the vehicle-body width direction. As illustrated in FIGS. **5**, **6**, the intermediate axle **3***a* and the rear axle **2***a* are outward of the retention frame **25** in the vehicle-body width direction. The intermediate wheel **3** and the rear wheel **2** are attachable to and detachable from the retention frame **25** from the laterally outward of the vehicle body. Accordingly, the intermediate wheel **3** and the rear wheel **2** can be easily attached and detached.

When the transmission **17** receives power from the engine **6** as a drive source or a power source, the transmission **17** transmits the power to the intermediate wheel **3** and the rear wheel **2**. As a result, the intermediate wheel **3** and the rear wheel **2** are driven. As illustrated in FIG. **6**, the transmission **17** includes an intermediate-wheel power transmission **41** configured to transmit power to the intermediate wheel **3**, and a wheel power transmission **51** (a rear-wheel power transmission) configured to transmit power to the rear wheel **2**. The intermediate-wheel power transmission **41** and the wheel power transmission **51** are provided inside the retention frame **25**.

More specifically, as illustrated in FIG. **6**, an upstream transmission **30** is provided over a lateral portion of the transmission **17** and the pivot shaft **28**. A first downstream transmission **40** is provided over the pivot shaft **28** and the intermediate axle **3***a*. A second downstream transmission **50** is provided over the pivot shaft **28** and the rear axle **2***a*. The retention frame **25** serves as a power transmission case configured to store the intermediate-wheel power transmission **41** and the wheel power transmission **51** (the rear-wheel power transmission). Accordingly, the retention frame **25** is also used as the power transmission case, thus making it possible to reduce the number of components and to achieve an inexpensive configuration.

As illustrated in FIGS. **6**, **9**, the upstream transmission **30** includes a power transmission case **31**. The power transmission case **31** is inward of the retention frame **25**, over a lateral portion of the transmission case **19** and the pivot shaft **28**. The power transmission case **31** includes a power transmission **33** provided for an output shaft **32** of the transmission **17**, an input section **34** (see FIG. **10**) rotatably provided for the pivot shaft **28**, and an interlocking structure **35** configured to operate the power transmission **33** and the input section **34** in conjunction with each other.

In this example embodiment, as illustrated in FIGS. **6**, **9**, the output shaft **32** is an output shaft of the rear-wheel differential mechanism **20**. The power transmission **33** and the input section **34** include chain sprockets. The interlocking structure **35** includes an endless roller chain. Respective tension operating structures **36** are provided outward of a portion of the endless roller chain which portion extends from the power transmission **33** to the input section **34** and outward of a portion of the endless roller chain which portion extends from the input section **34** to the power transmission **33**. The tension operating structure **36** is swingably held by the power transmission case **31** and is pressed against the endless roller chain by a spring **37** so as to bias the endless roller chain toward a tensed side. In this example embodiment, the spring **37** is provided. However, the tension operating structure **36** may include a bent round bar material, a plastic tensioner, or the like as a structure having elasticity to press the endless roller chain, for example, and thus, the spring **37** may not be provided.

In the upstream transmission **30**, power transmitted from the transmission **17** to the power transmission **33** is transmitted to the input section **34** from the power transmission **33** via the interlocking structure **35**. In this example embodiment, the endless roller chain of the interlocking structure **35** is maintained in a tensed state necessary for power transmission by the tension operating structures **36**.

As illustrated in FIGS. **6**, **8**, the first downstream transmission **40** is provided with the retention frame **25** and the intermediate axle case **26**. The power transmitted from the transmission **17** to the input section **34** by the upstream transmission **30** is transmitted to the intermediate wheel **3** via the retention frame **25** and the intermediate axle case **26**.

More specifically, as illustrated in FIGS. **6**, **8**, the first downstream transmission **40** includes the intermediate-wheel power transmission **41** provided over the retention frame **25** and the intermediate axle case **26**.

As illustrated in FIGS. **6**, **8**, the intermediate-wheel power transmission **41** is provided over the inside of the retention frame **25** and the inside of the intermediate axle case **26**. The intermediate-wheel power transmission **41** includes a first transmission wheel body **42** on the pivot shaft side, a transmission wheel body **44** on the intermediate wheel side, an endless roller transmission body **45**, and an intermediate-wheel gear transmission section **46**. The first transmission wheel body **42** on the pivot shaft side is rotatably provided for the pivot shaft **28**. The transmission wheel body **44** on the intermediate wheel side is provided for an input shaft **43** of the intermediate axle case **26**. The endless roller transmission body **45** is wound on the first transmission wheel body **42** on the pivot shaft side and the transmission wheel body **44** on the intermediate wheel side. The intermediate-wheel gear transmission section **46** is provided over the input shaft **43** of the intermediate axle case **26** and the intermediate axle **3***a*.

As illustrated in FIG. **8**, respective tension operating structures **49** are provided outward of a portion of the endless roller transmission body **45** which portion extends from the first transmission wheel body **42** to the transmission wheel body **44** and outward of a portion of the endless roller transmission body **45** which portion extends from the transmission wheel body **44** to the first transmission wheel body **42**. The tension operating structure **49** is swingably held by the retention frame **25** and is pressed against the endless roller transmission body **45** by a biasing mechanism

49*a* so as to bias the endless roller transmission body **45** toward a tensed side. In this example embodiment, the first transmission wheel body **42** on the pivot shaft side and the transmission wheel body **44** on the intermediate wheel side are chain sprockets. The endless roller transmission body **45** is an endless roller chain. The biasing mechanism **49***a* is a spring. In this example embodiment, the biasing mechanism **49***a* is provided. However, the tension operating structure **49** may use a bent round bar material, a plastic tensioner, or the like as a structure having elasticity to press the endless roller chain, for example, and thus, the biasing mechanism **49***a* may not be provided.

As illustrated in FIG. **10**, the first transmission wheel body **42** is coupled to the input section **34** via a cylindrical boss **47**. A structure to attach the first transmission wheel body **42** to the pivot shaft **28** and a structure to attach the input section **34** to the pivot shaft **28** are constituted by the same cylindrical boss **47**. An intermediate tube **48** is provided between the cylindrical boss **47** and the pivot shaft **28**. The intermediate tube **48** is fixed to an annular coupler **62** and positions the cylindrical boss **47** relative to the pivot shaft **28**. The intermediate tube **48** is fixed to the annular coupler **62** by welding.

In the first downstream transmission **40**, the power transmitted from the transmission **17** to the input section **34** is transmitted to the intermediate axle **3***a* via the intermediate-wheel power transmission **41**. The power from the input section **34** is transmitted to the first transmission wheel body **42** of the intermediate-wheel power transmission **41**. This power is transmitted to the intermediate axle **3***a* via the endless roller transmission body **45**, the transmission wheel body **44**, and the intermediate-wheel gear transmission section **46**.

As illustrated in FIG. **6**, the intermediate-wheel gear transmission section **46** includes an input shaft gear **46***a* held by the input shaft **43** of the intermediate axle case **26**, and an intermediate axle gear **46***b* held by the intermediate axle **3***a*. The input shaft gear **46***a* is engaged with the intermediate axle gear **46***b*. The power from the input section **34** is transmitted to the input shaft **43** of the intermediate-wheel gear transmission section **46** (the intermediate axle case **26**). This power is output to the intermediate axle **3***a* via the input shaft gear **46***a* and the intermediate axle gear **46***b* in the intermediate-wheel gear transmission section **46**. The rotation direction of the intermediate axle **3***a* is changed to a rotation direction reverse to the rotation direction of the input shaft **43** by the input shaft gear **46***a* and the intermediate axle gear **46***b* in the intermediate-wheel gear transmission section **46**. The intermediate axle gear **46***b* has a gear diameter larger than the gear diameter of the input shaft gear **46***a*. The endless roller transmission body **45** is maintained in a tensed state necessary for power transmission by the tension operating structure **49**.

As illustrated in FIGS. **6**, **8**, the second downstream transmission **50** is provided with the retention frame **25** and the rear axle case **27**. The power from the transmission **17** is transmitted to the input section **34** via the upstream transmission **30**. This power is transmitted to the rear wheel **2** via the retention frame **25** and the rear axle case **27**.

More specifically, as illustrated in FIGS. **6**, **8**, the second downstream transmission **50** includes the wheel power transmission **51** provided over the retention frame **25** and the rear axle case **27**.

As illustrated in FIGS. **6**, **8**, the wheel power transmission **51** is provided over the inside of the retention frame **25** and the inside of the rear axle case **27**. The wheel power transmission **51** includes a second transmission wheel body **52** on the pivot shaft side, a transmission wheel body **54** on the wheel side, an endless roller transmission body **55**, and a wheel gear transmission section **56**. The second transmission wheel body **52** on the pivot shaft side is rotatably provided for the pivot shaft **28**. The transmission wheel body **54** on the wheel side is provided for an input shaft **53** of the rear axle case **27**. The endless roller transmission body **55** is wound on the second transmission wheel body **52** on the pivot shaft side and the transmission wheel body **54** on the wheel side. The wheel gear transmission section **56** is provided over the input shaft **53** of the rear axle case **27** and the rear axle **2***a*.

As illustrated in FIG. **8**, respective tension operating structures **59** are provided outward of a portion of the endless roller transmission body **55** which portion extends from the second transmission wheel body **52** to the transmission wheel body **54** and outward of a portion of the endless roller transmission body **55** which portion extends from the transmission wheel body **54** to the second transmission wheel body **52**. The tension operating structure **59** is swingably held by the retention frame **25** and is pressed against the endless roller transmission body **55** by a biasing mechanism **59***a* so as to bias the endless roller transmission body **55** toward a tensed side. In this example embodiment, the second transmission wheel body **52** on the pivot shaft side and the transmission wheel body **54** on the wheel side are chain sprockets. The endless roller transmission body **55** is an endless roller chain. The biasing mechanism **59***a* is a spring. In this example embodiment, the biasing mechanism **59***a* is provided. However, the tension operating structure **59** may use a bent round bar material, a plastic tensioner, or the like as a structure having elasticity to press the endless roller chain, for example, and thus, the biasing mechanism **59***a* may not be provided.

As illustrated in FIG. **10**, the second transmission wheel body **52** is coupled to the input section **34** via the cylindrical boss **47**. A structure to attach the second transmission wheel body **52** to the pivot shaft **28** and a structure to attach the input section **34** to the pivot shaft **28** are defined by the same cylindrical boss **47**.

As illustrated in FIG. **6**, in the second downstream transmission **50**, the power transmitted from the transmission **17** to the input section **34** is transmitted to the rear axle **2***a* via the wheel power transmission **51**. The wheel gear transmission section **56** includes an input shaft gear **56***a* held by the input shaft **53** of the rear axle case **27**, and a rear axle gear **56***b* held by the rear axle **2***a*. The input shaft gear **56***a* is engaged with the rear axle gear **56***b*. The power from the input section **34** is output to the rear axle **2***a* via the second transmission wheel body **52**, the endless roller transmission body **55**, the transmission wheel body **54**, and the wheel gear transmission section **56**. The rotation direction of the rear axle **2***a* is changed to a rotation direction reverse to the rotation direction of the input shaft **53** by the input shaft gear **56***a* and the rear axle gear **56***b* in the wheel gear transmission section **56**. The rear axle gear **56***b* has a gear diameter larger than the gear diameter of the input shaft gear **56***a*. The endless roller transmission body **55** is maintained in a tensed state necessary for power transmission by the tension operating structure **59**.

As illustrated in FIG. **6**, respective brakes **60** are provided for right and left output shafts **32** of the transmission **17** inside the transmission case **19**. The output shaft **32** is an output shaft of the rear-wheel differential mechanism **20**. In this example embodiment, right and left brakes **60** are multi-disc friction brakes. The right and left brakes **60** can brake the output shafts **32**. When the output shafts **32** are

braked, respective power transmissions **33** are braked. When the power transmission **33** is braked, a braking force applied to the power transmission **33** is transmitted to the intermediate axle **3***a* via the upstream transmission **30** and the intermediate-wheel power transmission **41**. When the power transmission **33** is braked, a braking force applied to the power transmission **33** is transmitted to the rear axle **2***a* via the upstream transmission **30** and the wheel power transmission **51**. The power transmission **33** is braked by the brake **60**, so that the intermediate wheel **3** and the rear wheel **2** are braked. When the brake **60** is just operated to ON, the intermediate wheel **3** and the rear wheel **2** can be braked.

As illustrated in FIGS. **7**, **10**, in the intermediate portion **25***c* of the retention frame **25**, the annular coupler **62** is coupled to an outer wall portion **25***f* of the retention frame **25** via a cover **61** (described later). The intermediate tube **48** is outwardly engaged to the pivot shaft **28** so as to be rotatable. The annular coupler **62** is coupled to the intermediate tube **48**. A coupling section **25***g* is provided for an inner wall portion **25***r* of the retention frame **25**. An end portion **31***a* is held by the pivot shaft **28** in the power transmission case **31**. The coupling section **25***g* is coupled to the end portion **31***a* so as to be rotatable. The intermediate portion **25***c* of the retention frame **25** is coupled to the pivot shaft **28** so as to be rotatable via the cover **61**, the annular coupler **62**, the intermediate tube **48**, and the power transmission case **31**. That is, the retention frame **25** is held by the vehicle body frame **15** so as to be vertically swingable around a pivot shaft axis Y of the pivot shaft **28** as a swing pivot which pivot shaft axis Y extends in the vehicle-body width direction. The pivot shaft **28** extends in the vehicle-body width direction of the vehicle body frame **15** and is attached to the retention frame **25** so as to couple the retention frame **25** to the vehicle body frame **15** in such a manner that the retention frame **25** is vertically swingable. With the configuration in which the pivot shaft **28** is coupled to the vehicle body frame **15**, the retention frame **25** can be by the vehicle body frame **15** so as to be vertically swingable with an inexpensive configuration.

As illustrated in FIGS. **3**, **13**, **14**, a hydraulic cylinder **63** is coupled to the rear portion of the retention frame **25**, so that the hydraulic cylinder **63** as an actuator can swing the retention frame **25**.

More specifically, as illustrated in FIGS. **13**, **14**, in this example embodiment, the hydraulic cylinder **63** includes a piston rod **63***a* and a cylinder tube **63***b*. The piston rod **63***a* is a double rod cylinder projecting from both ends of the cylinder tube **63***b*. A coupler **64** having a forked shape is provided for a lower portion of the piston rod **63***a*. A cylinder coupler **65** is provided for the rear portion of the retention frame **25**. The coupler **64** is coupled to the cylinder coupler **65** via a coupling pin **66**. The piston rod **63***a* and the retention frame **25** operate in conjunction with each other via the coupler **64**, the coupling pin **66**, and the cylinder coupler **65**. The cylinder tube **63***b* is provided with a tube guard **67**. The ROPS **13** includes a column support **13***a* provided with a support shaft **68**. The tube guard **67** is coupled to the support shaft **68**. The ROPS **13** includes the column support **13***a* and an upper ROPS portion **13***b*. The column support **13***a* is fixed to both lateral portions of the vehicle body frame **15**. The upper ROPS portion **13***b* is coupled to right and left column supports **13***a* so as to be switchable between an upright posture and a laid-down posture. The cylinder tube **63***b* is supported by the column support **13***a* via the tube guard **67** and the support shaft **68**.

As illustrated in FIG. **2**, a portion of the piston rod **63***a* that projects upward from the cylinder tube **63***b* extends through an opening of the rear-wheel fender **14**. An upper portion of the piston rod **63***a* projects upward from the rear-wheel fender **14**. As illustrated in FIG. **13**, the portion of the piston rod **63***a* which portion projects upward from the cylinder tube **63***b* is coupled to a potentiometer **69** held by the column support **13***a* of the ROPS **13** via a link mechanism **70**. The potentiometer **69** detects an elevating stroke of the piston rod **63***a* as a swing stroke of the retention frame **25**.

The hydraulic cylinder **63** presses down the cylinder coupler **65** in response to the piston rod **63***a* being lowered. As a result, the wheel adjacent portion **25***d* of the retention frame **25** is lowered. In this state, the hydraulic cylinder **63** swings the retention frame **25** to lift the intermediate-wheel adjacent portion **25***e* relative to the vehicle body frame **15**. The hydraulic cylinder **63** lifts the cylinder coupler **65** in response to the piston rod **63***a* being lifted. As a result, the wheel adjacent portion **25***d* is lifted. In this state, the hydraulic cylinder **63** swings the retention frame **25** to lower the intermediate-wheel adjacent portion **25***e* relative to the vehicle body frame **15**.

The hydraulic cylinder **63** can swing the retention frame **25**. Accordingly, it is possible to easily switch the retention frame **25** by power of the hydraulic cylinder **63** between a state where the intermediate wheel **3** and the rear wheel **2** are grounded and a state where the intermediate wheel **3** is ungrounded.

As illustrated in FIGS. **3**, **7**, a first positioning section **71** is provided for an upper portion of the intermediate-wheel adjacent portion **25***e* of the retention frame **25**. A second positioning section **72** is also provided for an upper portion of the wheel adjacent portion **25***d* of the retention frame **25**. Besides, as illustrated in FIGS. **3**, **8**, the vehicle body frame **15** is provided with a first stopper **73** and a second stopper **74**. When the wheel adjacent portion **25***d* of the retention frame **25** is lowered, the intermediate-wheel adjacent portion **25***e* is lifted to cause the first positioning section **71** to abut with the first stopper **73**, so that a lowering limit of the wheel adjacent portion **25***d* and a lifting limit of the intermediate-wheel adjacent portion **25***e* are determined. When the intermediate-wheel adjacent portion **25***e* of the retention frame **25** is lowered, the wheel adjacent portion **25***d* is lifted to cause the second positioning section **72** to abut with the second stopper **74**, so that a lowering limit of the intermediate-wheel adjacent portion **25***e* and a lifting limit of the wheel adjacent portion **25***d* are determined. The first positioning section **71**, the second positioning section **72**, the first stopper **73**, and the second stopper **74** determine the swing stroke by which the retention frame **25** is swingable.

As illustrated in FIG. **15**, an operating device **76** is linked to respective operating valves **75** of the left hydraulic cylinder **63** configured to swing the left retention frame **25** and the right hydraulic cylinder **63** configured to swing the right retention frame **25**. When the operating device **76** is manually operated, switching of the operating valves **75** of the right and left hydraulic cylinders **63** is performed. In this example embodiment, an operation tool for the operating device **76** is an operation switch (not illustrated). An operating lever can be also used instead of the operation switch. Alternatively, a remote controller that can remotely operate the operating valve **75** by radio can be also used.

By switching the piston rod **63***a* between a lifting side and a lowering side in response to switching of the operating valve **75**, the retention frame **25** is switched by the hydraulic cylinder **63** between a first posture S**1** illustrated in FIGS. **1**, **3** and a second posture S**2** illustrated in FIG. **4**.

As illustrated in FIGS. **1**, **3**, in a case where the retention frame **25** is switched to the first posture S**1**, the intermediate-wheel adjacent portion **25***e* of the retention frame **25** is lowered, so that the intermediate wheel **3** is placed on a ground G. That is, the retention frame **25** causes the intermediate wheel **3** and the rear wheel **2** to be grounded. In a case where the intermediate wheel **3** and the rear wheel **2** are grounded, the front wheel **1**, the intermediate wheel **3**, and the rear wheel **2** are all grounded. That is, the vehicle body travels by six wheels.

As illustrated in FIG. **4**, in a case where the retention frame **25** is switched to the second posture S**2**, the intermediate-wheel adjacent portion **25***e* of the retention frame **25** is lifted, so that the intermediate wheel **3** is lifted and separated from the ground G. The retention frame **25** causes the intermediate wheel **3** to be ungrounded and the rear wheel **2** to be grounded. In a case where the intermediate wheel **3** is ungrounded and the rear wheel **2** is grounded, only the front wheel **1** and the rear wheel **2** are grounded among the front wheel **1**, the intermediate wheel **3**, and the rear wheel **2**. That is, the vehicle body travels by four wheels.

Thus, the retention frame **25** is supported by the vehicle body frame **15** so as to be vertically swingable and allows the intermediate wheel **3** and the rear wheel **2** to vertically swing relative to the vehicle body frame **15**. The vertical swinging of the retention frame **25** relative to the vehicle body frame **15** can achieve an intermediate-wheel grounded state where the intermediate wheel **3** and the rear wheel **2** are both grounded and an intermediate-wheel ungrounded state where the intermediate wheel **3** is ungrounded and the rear wheel **2** is grounded.

At the time of work travel or the like, the retention frame **25** is switched to the first posture S**1**, so that the vehicle body **4** is supported with the front wheel **1**, the intermediate wheel **3**, and the rear wheel **2** being all grounded. Accordingly, in comparison with a case where the retention frame **25** is switched to the second posture S**2**, in which the intermediate wheel **3** is ungrounded, the vehicle body can travel in a state where the vehicle body is less likely to skid and easily travels straight. That is, when the intermediate-wheel grounded state is established, the vehicle body travels with the intermediate wheel **3** and the rear wheel **2** (a driving wheel) being grounded and driven. In comparison with a support structure or the like of a crawler belt in a case where a crawler is used, a support structure or the like for the rear wheel **2** and the intermediate wheel **3** can be simplified.

At the time when the vehicle body turns, the retention frame **25** is switched to the second posture S**2**, so that only the front wheel **1** and the rear wheel **2** among the front wheel **1**, the intermediate wheel **3**, and the rear wheel **2** are grounded to support the vehicle body **4**. This allows the vehicle body **4** to turn with a small turning resistance to be given, in comparison with a case where the retention frame **25** is switched to the first posture S**1** to cause the intermediate wheel **3** to be grounded. That is, when the intermediate-wheel ungrounded state is established, the intermediate wheel **3** is ungrounded. Accordingly, in comparison with a state (the intermediate-wheel grounded state) where the front wheel **1**, the intermediate wheel **3**, and the rear wheel **2** are grounded, the vehicle body can turn with a small resistance to be given by grounding of the wheels.

That is, when the intermediate-wheel grounded state is established, the vehicle body can travel in such a manner that the vehicle body is less likely to skid. When the intermediate-wheel ungrounded state is established, the vehicle body can easily turn. In addition, a support structure or the like for the rear wheel **2** and the intermediate wheel **3** can be simplified and inexpensive.

In a case where the intermediate wheel **3** is switched from the grounded state to the ungrounded state in order to establish a state where the intermediate wheel **3** is ungrounded and the rear wheel **2** is grounded, the hydraulic cylinder **63** swings the wheel adjacent portion **25***d* of the retention frame **25** to the lowering side, so that the rear wheel **2** swings to be lowered. As a result, the pivot shaft **28** is pushed up with a ground point of the rear wheel **2** being as a reaction force point, and the rear portion of the vehicle body frame **15** is pushed up with the front axle **1***a* being as a swing pivot. In addition, the intermediate-wheel adjacent portion **25***e* of the retention frame **25** is lifted by the hydraulic cylinder **63** with the pivot shaft axis Y of the pivot shaft **28** being as a swing pivot, so that the intermediate wheel **3** is lifted. When the vehicle body frame **15** is pushed up and the intermediate wheel **3** is lifted due to swinging of the retention frame **25**, the intermediate wheel **3** is lifted, so that the intermediate wheel **3** can be efficiently lifted from the ground. That is, the intermediate wheel **3** can be efficiently lifted from the ground in comparison with a case where the intermediate wheel **3** is lifted only by the swinging of the retention frame **25**.

When the retention frame **25** is swung from the first posture S**1** to further lower the intermediate-wheel adjacent portion **25***e*, the pivot shaft **28** is pushed up with a ground point of the intermediate wheel **3** being as a reaction force point, so that the rear wheel **2** is lifted and separated from the ground G. That is, only the front wheel **1** and the intermediate wheel **3** are grounded among the front wheel **1**, the intermediate wheel **3**, and the rear wheel **2**. The retention frame **25** can swing within a swing range between a rear-wheel-floating swing posture in which the intermediate wheel **3** is lowered and grounded and the rear wheel **2** is separated from the ground G and an intermediate-wheel-floating swing posture in which the rear wheel **2** is lowered and grounded and the intermediate wheel **3** is separated from the ground G. When the retention frame **25** swings to a swing posture between the rear-wheel-floating swing posture and the intermediate-wheel-floating swing posture, the intermediate wheel **3** and the rear wheel **2** are grounded.

As illustrated in FIG. **15**, an accumulator **78** is connected to a hydraulic circuit **77** connecting the hydraulic cylinder **63** to the operating valve **75**. The hydraulic circuit **77** operates the hydraulic cylinder **63** in response to opening and closing of the operating valve **75**. In this example embodiment, the accumulator **78** is connected to a hydraulic circuit section **77***a* of the hydraulic circuit **77** which hydraulic circuit section **77***a* operates the hydraulic cylinder **63** to lower the piston rod **63***a*. Even in a case where pulsation or impact pressure is applied to the hydraulic cylinder **63** due to a grounding reaction force or the like on the rear wheel **2**, the pulsation or impact pressure to the hydraulic cylinder **63** is relaxed by the accumulator **78**. As a result, traveling vibration is relaxed by the accumulator **78**. In this example embodiment, the accumulator **78** is connected only to the hydraulic circuit section **77***a* that lowers the rear wheel **2** relative to the vehicle body frame **15**, but the accumulator **78** may be also connected to a hydraulic circuit section **77***b* that lifts the rear wheel **2** relative to the vehicle body frame **15**, in addition to the hydraulic circuit section **77***a*.

The pivot shaft **28** is coupled to the vehicle body frame **15** based on a shaft coupler **80** illustrated in FIGS. **5**, **11**.

As illustrated in FIGS. **5**, **11**, the shaft coupler **80** includes a pair of right and left coupling frames **81** extending in the vehicle-body front-rear direction. The pivot shaft **28** extends

through a pivot shaft holder **82** and fixed thereto. The pivot shaft holder **82** is formed in an intermediate portion of each of the right and left coupling frames **81** in the vehicle-body front-rear direction. In this example embodiment, the pivot shaft **28** is fixed to the pivot shaft holder **82** by welding. Front and rear coupling sections **83** are provided for each of the right and left coupling frames **81**. A front holder **84** and a rear holder **85** are provided for a lower portion of the transmission case **19**. The front coupling section **83** is coupled to the front holder **84**. The rear coupling section **83** is coupled to the rear holder **85**. As a result, the right and left coupling frames **81** are each coupled to the transmission case **19**. The pivot shaft **28** is coupled to the transmission case **19** of the vehicle body frame **15** via each of the right and left coupling frames **81**.

As illustrated in FIG. **11**, the shaft coupler **80** includes a pivot shaft change mechanism **86**. The pivot shaft change mechanism **86** is configured to change the coupling position of the pivot shaft **28** in the vehicle body frame **15**.

As illustrated in FIG. **11**, the pivot shaft change mechanism **86** includes a bolt attachment hole **84***a*, a bolt attachment hole **85***a*, and a coupling bolt **87**. A plurality of bolt attachment holes **84***a* is provided for the front holder **84** to be arranged in the vehicle-body front-rear direction. A plurality of bolt attachment holes **85***a* is provided for the rear holder **85** to be arranged the vehicle-body front-rear direction. The coupling bolt **87** detachably couples the front coupling section **83** of each of the right and left coupling frames **81** to the front holder **84**. The coupling bolt **87** detachably couples the rear coupling section **83** of each of the right and left coupling frames **81** to the rear holder **85**.

In the pivot shaft change mechanism **86**, the coupling bolt **87** of the front coupling section **83** is freely attachable to any of the plurality of bolt attachment holes **84***a* of the front holder **84**, and the coupling bolt **87** of the rear coupling section **83** is freely attachable to any of the plurality of bolt attachment holes **85***a* of the rear holder **85**. As a result, the coupling position of the pivot shaft **28** in the vehicle body frame **15** is changeable in the vehicle-body front-rear direction. In this example embodiment, as illustrated in FIGS. **5**, **7**, a first coupling position P**1**, a second coupling position P**2**, and a third coupling position P**3** arranged at intervals in the vehicle-body front-rear direction are set as a coupling position to which the pivot shaft **28** is couplable. The coupling position of the pivot shaft **28** is changeable between three positions in the vehicle-body front-rear direction in a stepped manner. The first coupling position P**1** is a frontmost coupling position among the three coupling positions. The third coupling position P**3** is a rearmost coupling position among the three coupling positions. The second coupling position P**2** is a coupling position between the first coupling position P**1** and the third coupling position P**3**.

For example, in a case where a work device is towed or the vehicle body turns, when the pivot shaft **28** is coupled to the third coupling position P**3** of the vehicle body frame **15**, grounding reaction forces of the intermediate wheel **3** and the rear wheel **2** are applied to a rear side of the vehicle body frame **15** as compared to a case where the pivot shaft **28** is coupled to the first coupling position P**1** or the second coupling position P**2** in the vehicle body frame **15**.

In a case of an uneven ground, for example, when the pivot shaft **28** is coupled to the second coupling position P**2** of the vehicle body frame **15**, grounding reaction forces of the intermediate wheel **3** and the rear wheel **2** are applied to the rear side of the vehicle body frame **15** as compared to a case where the pivot shaft **28** is coupled to the first coupling position P**1** and to a front side of the vehicle body frame **15** as compared to a case where the pivot shaft **28** is coupled to the third coupling position P**3**.

For example, in a case of a leveled ground, when the pivot shaft **28** is coupled to the first coupling position P**1** of the vehicle body frame **15**, grounding reaction forces of the intermediate wheel **3** and the rear wheel **2** are applied to the front side of the vehicle body frame **15** as compared to a case where the pivot shaft **28** is coupled to the second coupling position P**2** or the third coupling position P**3**.

In this example embodiment, the plurality of bolt attachment holes **84***a* of the front holder **84** is arranged in the front-rear direction at the same interval as the interval between two coupling bolts **87** of the front coupling section **83**. Similarly, the plurality of bolt attachment holes **85***a* of the rear holder **85** is arranged in the front-rear direction at the same interval as the interval between two coupling bolts **87** of the rear coupling section **83**. Even in a case where any of the first coupling position P**1**, the second coupling position P**2**, and the third coupling position P**3** is set as the coupling position of the pivot shaft **28**, two bolt attachment holes **84***a* are used from among the plurality of bolt attachment holes **84***a* of the front holder **84**, and two bolt attachment holes **85***a* are used from among the plurality of bolt attachment holes **85***a* of the rear holder **85**. In a case where the coupling position is changed between the first coupling position P**1** and the second coupling position P**2**, and in a case where the coupling position is changed between the second coupling position P**2** and the third coupling position P**3**, that is, in a case where the coupling position is changed to one position ahead or behind, one of the two bolt attachment holes **84***a*, **85***a* is used as a common bolt attachment hole. In this example embodiment, two bolt attachment holes **84***a*, **85***a* and two coupling bolts **87** are used, but one bolt attachment hole or three or more bolt attachment holes may be used, and one coupling bolt **87** or three or more coupling bolts **87** may be used.

As illustrated in FIG. **7**, three pivot shaft attachment holes **88** are provided on the outer wall portion **25***f* of the retention frame **25** to be arranged in the front-rear direction. In a case where the coupling position of the pivot shaft **28** in the vehicle body frame **15** is changed, the pivot shaft **28** is attachable to the retention frame **25** with use of a pivot shaft attachment hole **88** corresponding to the coupling position of the pivot shaft **28** in the vehicle body frame **15**, from among the three pivot shaft attachment holes **88**. As a result, regardless of whether the coupling position of the pivot shaft **28** in the vehicle body frame **15** is changed or not, it is not necessary to change respective positions of the intermediate wheel **3** and the rear wheel **2** in the front-rear direction relative to the vehicle body **4**.

That is, in a case where the pivot shaft **28** is coupled at the first coupling position P**1**, the pivot shaft **28** is attached to the retention frame **25** with a frontmost pivot shaft attachment hole **88** from among the three pivot shaft attachment holes **88**. In this case, as illustrated in FIG. **8**, the pivot shaft **28** extends through a frontmost pivot shaft insertion hole **89** from among three pivot shaft insertion holes **89** on the inner wall portion **25***r* of the retention frame **25**. In a case where the pivot shaft **28** is attached with use of the frontmost pivot shaft attachment hole **88** as such, a first cover **61***a* among three covers **61** illustrated in FIG. **16** is attached to a surface of the outer wall portion **25***f*, so that the other pivot shaft attachment holes **88** to which the pivot shaft **28** is not attached can be blocked by the first cover **61***a*. As illustrated in FIG. **9**, when the output shaft **32** extends through a frontmost output shaft insertion hole **90** from among three output shaft insertion holes **90** on the power transmission

case **31** of the upstream transmission **30**, the attachment position of the pivot shaft **28** in the retention frame **25** is changeable.

In a case where the pivot shaft **28** is coupled at the second coupling position P**2**, the pivot shaft **28** is attached to the retention frame **25** with use of an intermediate pivot shaft attachment hole **88** from among the three pivot shaft attachment holes **88**. In this case, the pivot shaft **28** extends through an intermediate pivot shaft insertion hole **89** from among the three pivot shaft insertion holes **89**. In a case where the pivot shaft **28** is attached with use of the intermediate pivot shaft attachment hole **88** as such, a second cover **61***b* among the three covers **61** is attached to the surface of the outer wall portion **25***f*, so that the other pivot shaft attachment holes **88** to which the pivot shaft **28** is not attached can be blocked by the second cover **61***b*. When the output shaft **32** extends through an intermediate output shaft insertion hole **90** from among the three output shaft insertion holes **90**, the attachment position of the pivot shaft **28** in the retention frame **25** is changeable.

In a case where the pivot shaft **28** is coupled at the third coupling position P**3**, the pivot shaft **28** is attached to the retention frame **25** with use of a rearmost pivot shaft attachment hole **88** from among the three pivot shaft attachment holes **88**. In this case, the pivot shaft **28** extends through a rearmost pivot shaft insertion hole **89** from among the three pivot shaft insertion holes **89**. In a case where the pivot shaft **28** is attached with use of the rearmost pivot shaft attachment hole **88** as such, a third cover **61***c* among the three covers **61** is attached to the surface of the outer wall portion **25***f*, so that the other pivot shaft attachment holes **88** to which the pivot shaft **28** is not attached can be blocked by the third cover **61***c*. When the output shaft **32** extends through a rearmost output shaft insertion hole **90** from among the three output shaft insertion holes **90**, the attachment position of the pivot shaft **28** in the retention frame **25** is changeable.

As illustrated in FIG. **16**, each of the three covers **61** has a pivot shaft hole A**1**, a plurality of first bolt attachment holes A**2**, and a plurality of bolt attachment holes A**3**. An end portion of the pivot shaft **28** is inserted into the pivot shaft hole A**1**. The first bolt attachment hole A**2** is structured so that a coupling bolt to couple the cover **61** to the outer wall portion **25***f* is attached thereto. The bolt attachment hole A**3** is structured so that a coupling bolt to couple the annular coupler **62** (see FIG. **10**) is attached thereto.

In this example embodiment, the pivot shaft change mechanism **86** configured to change the coupling position of the pivot shaft **28** in the vehicle body frame **15** in a stepped manner between three positions in the vehicle-body front-rear direction, but the present invention is not limited to this. For example, a pivot shaft change mechanism configured to change the coupling position of the pivot shaft **28** in the vehicle-body front-rear direction in a stepped manner between two positions or four or more positions can be used. Alternatively, a pivot shaft change mechanism which includes a guide configured to slidably hold the coupling frame **81** and a fixing mechanism configured to fix the coupling frame **81** at a given position of the guide and which can steplessly change the coupling position of the pivot shaft **28** to a given position in the vehicle-body front-rear direction can be used. A pivot shaft change mechanism that can change the coupling position of the pivot shaft **28** in the vehicle-body up-down direction can be used. Alternatively, a pivot shaft change mechanism that can change the coupling position of the pivot shaft **28** both in the vehicle-body front-rear direction and the vehicle-body up-down direction can be used.

As illustrated in FIGS. **1**, **2**, the operation section **9** includes the step **12** as the floor provided forward of and below the operation seat **10**, and doorways **9***a* upward of the step **12** and on respective lateral portions of the operation section **9**. The intermediate wheel **3** is laterally outward of the step **12**. As illustrated in FIGS. **1**, **2**, **3**, a cover **91** on a lateral side of the step **12** is provided inward of the intermediate wheel **3** in the vehicle-body width direction. The cover **91** is attached to an outer surface of a support **92** provided in a standing manner for a lateral end portion of the step **12**. The dimension of the cover **91** in a side view of the vehicle body is set to a dimension allowing the cover **91** to cover a lower portion of the doorway **9***a* from laterally outward of the doorway **9***a*. Even when soil or the like is splashed by the intermediate wheel **3** toward the operation section **9**, the soil or the like hits the cover **91**, so that the cover **91** prevents the soil or the like from entering the operation section **9**. In this example embodiment, the cover **91** is made of metal.

As illustrated in FIG. **1**, the position of an upper end **91***t* of the cover **91** is higher than the position of an upper end **3***t* of the intermediate wheel **3**. The soil or the like splashed by the intermediate wheel **3** also hits the cover **91** at a position higher than the upper end **3***t* of the intermediate wheel **3**.

As illustrated in FIG. **1**, the position of the upper end **91***t* of the cover **91** is lower than the position of an upper end **2***t* of the rear wheel **2**. The position of the upper end **91***t* of the cover **91** is higher than the position of an upper end **1***t* of the front wheel **1**.

As illustrated in FIGS. **1**, **2**, **3**, the rear-wheel fender **14** covering the rear wheel **2** is provided laterally outward of the operation section **9**. As illustrated in FIGS. **1**, **2**, the rear-wheel fender **14** is attached to the vehicle body frame **15** by a wall panel **9***b* extending toward the vehicle body frame **15** from an inner edge portion of the rear-wheel fender **14** in the vehicle-body width direction. The wall panel **9***b* defines a lateral wall of the operation section **9**.

As illustrated in FIGS. **2**, **3**, the cover **91** has an end portion **91***r* adjacent to the rear-wheel fender **14** which end portion **91***r* is at a position facing an end portion (an end portion facing the doorway **9***a*) of the rear-wheel fender **14** which end portion is adjacent to the intermediate wheel **3**. More specifically, the end portion **91***r* of the cover **91** faces, from the front side, the end portion of the rear-wheel fender **14** which end portion faces the doorway **9***a*. Even when the soil or the like splashed by the intermediate wheel **3** is directed toward the rear-wheel fender **14** from the cover **91**, the soil or the like is less likely to enter the operation section **9** from the end portion **91***r* of the cover **91**.

As illustrated in FIGS. **1**, **2**, **3**, the engine bonnet **7** of the motor section **5** is provided in the front portion of the vehicle body **4** on a side opposite to the rear wheel **2** across the intermediate axle **3***a* of the intermediate wheel **3**. In a side view of the vehicle body, the cover **91** is placed from a position facing an end portion **7***t* of the engine bonnet **7** which end portion **7***t* is adjacent to the intermediate wheel **3** to a position facing an end portion of the rear-wheel fender **14** which end portion is adjacent to the intermediate wheel **3**. More specifically, an end portion **91***f* of the cover **91** which end portion **91***f* is adjacent to the engine bonnet **7** faces, from below, the end portion **7***t* of the engine bonnet **7** which end portion **7***t* is adjacent to the intermediate wheel **3**. The end portion **91***r* of the cover **91** which end portion **91***r*

is adjacent to the rear-wheel fender **14** faces the end portion of the rear-wheel fender **14** which end portion is adjacent to the intermediate wheel **3**, from the front side (a side opposite to the side where the rear wheel **2** is placed). Even when the soil or the like splashed by the intermediate wheel **3** is directed toward the motor section **5** from the cover **91**, the soil or the like is less likely to enter the operation section **9** from the end portion **91***f* of the cover **91**. Even when the soil or the like splashed by the intermediate wheel **3** is directed toward the rear-wheel fender **14** from the cover **91**, the soil or the like is less likely to enter the operation section **9** from the end portion **91***r* of the cover **91**.

The footboard **93** is provided for a wheel configured to swing. More specifically, the footboard **93** is provided for the intermediate wheel **3** configured to swing. More specifically, as illustrated in FIGS. **1**, **12**, the footboard **93** is provided for a portion of a laterally outer portion of the intermediate wheel **3** which portion is closer to an axle center than an outer peripheral edge of the intermediate wheel **3**. In this example embodiment, the footboard **93** is attached to a rim **3***b* of the intermediate wheel **3**. The footboard **93** includes an attachment seat **93***a* (see FIG. **17**), and the attachment seat **93***a* is coupled to the rim **3***b* by tightening. The attachment seat **93***a* is coupled to the rim **3***b* in such a manner that a coupling bolt attached to an attachment hole **93***d* formed in the attachment seat **93***a* is engaged with the rim **3***b*. An operator can get in the operation section **9** with use of the footboard **93** and can get off the operation section **9** with use of the footboard **93**.

That is, in a case where the operator gets in the operation section **9**, the operator puts one foot on the footboard **93**, as illustrated in FIG. **12**. The operator uses the footboard **93** as a step to step on the intermediate wheel **3** and climbs over the cover **91** by putting the foot on the cover **91** from the intermediate wheel **3**, so that the operator can get on the step **12** of the operation section **9**. In a case where the operator gets off the operation section **9**, the operator puts one foot on the cover **91** from the step **12** of the operation section **9** and steps on the intermediate wheel **3**. Then, the operator puts one foot on the footboard **93** from the intermediate wheel **3** and stands down on the ground from the footboard **93**. With use of the footboard **93** as such, the operator can easily step on the intermediate wheel **3** and easily get in the operation section **9** in comparison with a case where the operator directly steps on the intermediate wheel **3** from the ground. The operator also easily gets down on the ground and easily gets off the operation section **9** in comparison with a case where the operator directly gets down on the ground from the intermediate wheel **3**. The position of the upper end **91***t* of the cover **91** is lower than the position of the upper end **2***t* of the rear wheel **2**. This allows the operator to easily step on the cover **91** from the intermediate wheel **3**. It is preferable for the operator to use the footboard **93** when all the six wheels are grounded (when the intermediate wheel **3** provided with the footboard **93** is grounded).

As illustrated in FIGS. **1**, **2**, **12**, the rear-wheel fender **14** is provided with a handrail **94**. At the time when the operator gets in and off the operation section **9**, the operator grips the handrail **94** by one hand and grips the steering wheel **11** by the other hand, so that the operator can stabilize his or her body.

As illustrated in FIGS. **1**, **12**, **17**, the footboard **93** has a circular shape as viewed in a direction along the axle center **3***c* of the intermediate wheel **3**. Even in a case where the intermediate wheel **3** stops at any rotation position, the operator can easily put the foot on the footboard **93** due to the circular shape of the footboard **93**.

As illustrated in FIGS. **12**, **17**, the footboard **93** includes a plurality of bar-shaped bodies **93***b* extending in a direction along the axle center **3***c* of the intermediate wheel **3** such that the plurality f bar-shaped bodies **93***b* is arranged along the circumferential direction of the footboard **93**. The plurality of bar-shaped bodies **93***b* is arranged in the circumferential direction of the footboard **93** such that adjacent bar-shaped bodies **93***b* are disposed at an interval. Respective end portions of the plurality of bar-shaped bodies **93***b* which respective end portions are opposite to the intermediate wheel are coupled to each other by an annular coupler **93***c*. Water, soil, or the like attached to the footboard **93** easily drops between the bar-shaped bodies **93***b*. As illustrated in FIG. **12**, the coupler **93***c* is configured not to project outward of an overall width of the tire. More specifically, in a wheel width direction, the position of a tire outer end of the coupler **93***c* and the position of an outer end of the tire are the same. However, a tire outer end of the rim **3***b* is inward of the outer end of the tire. As a result, the length of the footboard **93** in a direction along the axle center **3***c* of the intermediate wheel **3** is relatively long, so that the operator easily puts the foot on the footboard **93**.

As illustrated in FIGS. **1** and **2**, the engine bonnet **7** of the motor section **5** is provided for the front portion of the vehicle body **4** on a side opposite to the rear wheel **2** across the intermediate axle **3***a* of the intermediate wheel **3**. The fuel tank **8** for the engine is provided laterally outward of the engine bonnet **7**. In this example embodiment, the fuel tank **8** is provided laterally outward of the right side of the engine bonnet **7**. The fuel tank **8** is provided in a portion placed at a position higher than the upper end **91***t* of the cover **91**. The fuel tank **8** is put on a mounting table **95** and fixed to the mounting table **95** by a lashing band. The mounting table **95** is supported by front and rear support columns **97** provided in a standing manner from the support frame **96** of the engine bonnet **7**. As illustrated in FIG. **2**, the fuel tank **8** and the retention frame **25** do not overlap with each other in a plan view. As illustrated in FIG. **1**, the fuel tank **8** is at a position higher than the upper end **1***t* of the front wheel **1** and higher than the upper end **3***t* of the intermediate wheel **3**. The fuel tank **8** and the intermediate wheel **3** overlap with each other in a plan view. The fuel tank **8** and the footboard **93** provided for the intermediate wheel **3** are placed close to each other. When the operator puts the foot on the footboard **93**, the operator easily refuels the fuel tank **8**.

The fuel tank **8** is at a position higher than the upper end **91***t* of the cover **91**, in a portion opposite to the rear wheel **2** across the intermediate axle **3***a*. Accordingly, soil or the like splashed by the intermediate wheel **3** is less likely to be applied to the fuel tank **8**.

A fuel tank formed integrally with the cover **91** made of resin or a fuel tank formed integrally with the rear-wheel fender **14** made of resin can be used instead of the fuel tank **8**.

The present invention is not limited to the configurations of the above example embodiments, and the following describes alternative example embodiments of the present invention.

(1) FIG. **18** is a side view illustrating an alternative example embodiment of a linkage mechanism **98** configured to operate the hydraulic cylinder **63** and the retention frame **25** in conjunction with each other. The linkage mechanism **98** of the alternative example embodiment includes a linkage flexible section **99**, and the linkage flexible section **99** allows the retention frame **25** to vertically swing within a predetermined range while the hydraulic cylinder **63** is stopped.

More specifically, as illustrated in FIG. **18**, the linkage flexible section **99** has an elongated pin hole **100** for the forked coupler **64** of the piston rod **63***a*, and the coupling pin **66** is slidably inserted and locked in the pin hole **100**.

When the coupling pin **66** slides relative to the coupler **64** along the pin hole **100**, the linkage flexible section **99** allows the retention frame **25** to vertically swing with the hydraulic cylinder **63** being stopped. A slide stroke by which the coupling pin **66** is slidable is determined by the length of the pin hole **100**, and this slide stroke determines a predetermined range where the retention frame **25** is allowed to swing vertically. For example, at the time when the rear wheel **2** passes irregularities on a travel ground, the rear wheel **2** is lifted and lowered due to the irregularities within the predetermined range where the retention frame **25** is allowed to swing vertically. Accordingly, the traveling vibration of the vehicle body due to the irregularities is relieved by lifting and lowering of the rear wheel **2**.

(2) FIG. **19** is a side view illustrating an alternative example embodiment of a swing range determination structure to determine the swing range of the retention frame **25**. The swing range determination structure of the alternative example embodiment includes a stopper **101** fixed to an end portion of the pivot shaft **28** by coupling bolts and fixed to the vehicle body frame **15** via the pivot shaft **28**, and two upper and lower positioning protrusions **102** provided for the cover **61**. A swing range where the retention frame **25** is swingable is determined by the stopper **101** and the two upper and lower positioning protrusions **102**.

That is, with the swing range determination structure of the alternative example embodiment, when the wheel adjacent portion **25***d* of the retention frame **25** is lowered, the lower positioning protrusion **102** out of the two positioning protrusions **102** hits the stopper **101**, so that the lowering limit of the wheel adjacent portion **25***d* and the lifting limit of the intermediate-wheel adjacent portion **25***e* are determined. When the intermediate-wheel adjacent portion **25***e* of the retention frame **25** is lowered, the upper positioning protrusion **102** hits the stopper **101**, so that the lowering limit of the intermediate-wheel adjacent portion **25***e* and the lifting limit of the wheel adjacent portion **25***d* are determined.

(3) FIG. **20** is a side view illustrating another alternative example embodiment of the swing range determination structure to determine the swing range of the retention frame **25**. The swing range determination structure of another alternative example embodiment includes a stopper **103** fixed to the end portion of the pivot shaft **28** by coupling bolts and fixed to the vehicle body frame **15** via the pivot shaft **28**, and a single positioning protrusion **104** provided for the cover **61**. The stopper **103** has an elongated hole **103***a* having an arcuate shape, and the positioning protrusion **104** is inserted and locked in the elongated hole **103***a*. A swing range where the retention frame **25** is swingable is determined by the stopper **103** and the positioning protrusion **104**.

That is, in the swing range determination structure of the another alternative example embodiment, when the wheel adjacent portion **25***d* of the retention frame **25** is lowered, the positioning protrusion **104** is lifted inside the elongated hole **103***a* and hits the stopper **103** at an upper end portion of the elongated hole **103***a*, so that the lowering limit of the wheel adjacent portion **25***d* and the lifting limit of the intermediate-wheel adjacent portion **25***e* are determined. When the intermediate-wheel adjacent portion **25***e* of the retention frame **25** is lowered, the positioning protrusion **104** is lowered inside the elongated hole **103***a* and hits the stopper **103** at a lower end portion of the elongated hole **103***a*, so that the lowering limit of the intermediate-wheel adjacent portion **25***e* and the lifting limit of the wheel adjacent portion **25***d* are determined.

(4) FIG. **21** is a plane view illustrating a fuel tank installation structure of an alternative example embodiment. In the fuel tank installation structure of the alternative example embodiment, the fuel tank **8** is provided laterally outward of the right side of the engine bonnet **7**, at a position higher than the upper end **91***t* of the cover **91**, and is also provided inward of the cover **91** in the vehicle-body width direction.

(5) FIG. **22** is a plane view of a pivot shaft change mechanism **105** of an alternative example embodiment.

The pivot shaft change mechanism **105** of the alternative example embodiment includes front guide bodies **106** provided forward of the pivot shaft **28** in the vehicle-body front-rear direction and configured to slidably hold the right and left coupling frames **81**, respectively, rear guide bodies **107** provided rearward of the pivot shaft **28** in the vehicle-body front-rear direction and configured to slidably hold the right and left coupling frames **81**, respectively, and a position change cylinder **108** coupled to a central portion of the pivot shaft **28** in the vehicle-body width direction. The right and left front guide bodies **106** and the right and left rear guide bodies **107** are fixed to the lower portion of the vehicle body frame **15**. In this example embodiment, the position change cylinder **108** is a hydraulic cylinder.

In the pivot shaft change mechanism **105** of the alternative example embodiment, the pivot shaft **28** is guided by the front guide bodies **106** and the rear guide bodies **107** in response to expansion and contraction of the position change cylinder **108** as an actuator and is moved in the vehicle-body front-rear direction. The coupling position of the pivot shaft **28** in the vehicle body frame **15** is steplessly changed to a given position in the vehicle-body front-rear direction by the position change cylinder **108**.

As illustrated in FIG. **23**, the position change cylinder **108** includes an operating valve **109** linked to a controller **110**. The controller **110** is linked to a first detector **111**, a second detector **112**, a third detector **113**, and a manipulator **114**. The controller **110** includes a microcomputer.

The manipulator **114** includes an artificially operable operating section **114***a* and is configured to specify, by the operation of the operating section **114***a*, a coupling position where the pivot shaft **28** should be placed. The controller **110** is configured or programmed to control the operating valve **109** in response to the specification by the manipulator **114** to expand and contract the position change cylinder **108** and causes the position change cylinder **108** to change the coupling position of the pivot shaft **28** in the vehicle body frame **15** to the specified coupling position. The coupling position of the pivot shaft **28** in the vehicle body frame **15** can be adjusted to a desired coupling position by the manipulator **114**.

The operating section **114***a* of the manipulator **114** of this example embodiment is a dial and specifies the coupling position of the pivot shaft **28** by rotating the dial. The manipulator **114** may be operated by a touch panel, other than the configuration to be operated by the dial.

The first detector **111** is configured to detect the operation of a steering operation tool **115** configured to steer the vehicle body **4**. The controller **110** is configured or programmed to control the operating valve **109** based on a detection result from the first detector **111** so as to expand

and contract the position change cylinder **108** and cause the position change cylinder **108** to change the coupling position of the pivot shaft **28** in the vehicle body frame **15** to a coupling position corresponding to the detection result from the first detector **111**. For example, in a case where the front wheel **1** is steered from straight traveling to the left or the right by a predetermined angle or more, the coupling position of the pivot shaft **28** is changed such that the coupling position of the pivot shaft **28** in this case is placed rearward of the coupling position of the pivot shaft **28** when the front wheel **1** is steered straight or steered by less than the predetermined angle.

In this example embodiment, the steering operation tool **115** is the steering wheel **11**, and the first detector **111** is a rotary potentiometer working in conjunction with the steering wheel **11**. Instead of the steering wheel **11**, a steering lever or the like can be used as the steering operation tool **115**. Instead of the rotary potentiometer, a detection switch can be used as the first detector **111**.

The second detector **112** is configured to detect a travel surface state forward of the vehicle body **4**. The controller **110** is configured or programmed to control the operating valve **109** based on a detection result from the second detector **112** so as to expand and contract the position change cylinder **108** and causes the position change cylinder **108** to change the coupling position of the pivot shaft **28** in the vehicle body frame **15** to a coupling position corresponding to the detection result from the second detector **112**. For example, in a case where the travel surface has large irregularities, the coupling position of the pivot shaft **28** is changed such that the coupling position of the pivot shaft **28** in this case is rearward of the coupling position of the pivot shaft **28** when the irregularities of the travel surface are not so large.

In this example embodiment, the second detector **112** is a camera. Instead of the camera, a ground sensor can be used as the second detector **112**. A detector configured to detect a travel surface state detected in previous traveling and stored in the controller **110**, as a travel surface state at the time of current traveling, based on the travel surface state thus stored and positional information on the vehicle body **4** may be used as the second detector **112**.

The third detector **113** is configured to detect work contents. The controller **110** is configured or programmed to control the operating valve **109** based on a detection result from the third detector **113** so as to expand and contract the position change cylinder **108** and causes the position change cylinder **108** to change the coupling position of the pivot shaft **28** in the vehicle body frame **15** to a coupling position corresponding to the detection result from the third detector **113**. For example, in a case of work contents that require a large traction load, the coupling position of the pivot shaft **28** is changed such that the coupling position of the pivot shaft **28** in this case is placed rearward of the coupling position of the pivot shaft **28** when the traction load is not so large.

In this example embodiment, the third detector **113** detects work contents by detecting a detected portion in a work device coupled to the coupler **16** by contact or the like so as to detect a type of the work device, e.g., a rotary cultivating device, a roll bailer, a chemical agent applicator, or the like.

(6) In the above example embodiment, the drive source is the engine **6**, but the drive source is not limited to the engine **6** and may be an electric motor or may include both an engine and an electric motor.

(7) In the above example embodiment, the intermediate wheel **3** is provided, but the intermediate wheel **3** may not be provided. That is, the rear wheel **2** is placed laterally outward of the step **12**, and the travel device includes the front wheel **1** and the rear wheel **2** without the intermediate wheel **3**.

(8) In the above example embodiment, only one intermediate wheel **3** is provided, but two or more intermediate wheels **3** may be provided.

(9) The above example embodiment deals with an example in which the front wheel **1** and the rear wheel **2** are both driving wheels, and the outside diameter of the intermediate wheel **3** is smaller than the outside diameters of the front wheel **1** and the rear wheel **2**. However, the present invention is not limited to this. Either the front wheel **1** or the rear wheel **2** may be a driving wheel. In a case where either the front wheel **1** or the rear wheel **2** is a driving wheel, the outside diameter of the intermediate wheel **3** should be smaller than the outside diameter of the driving wheel out of the front wheel **1** and the rear wheel **2**.

(10) The above example embodiment deals with an example in which the intermediate wheel **3** and the rear wheel **2** (the driving wheel) are held by the retention frame **25** and supported by the vehicle body frame **15** via the retention frame **25**. However, the retention frame **25** may not be provided, and the intermediate wheel **3** and the rear wheel **2** may be directly supported by the vehicle body frame **15**. Alternatively, the intermediate wheel **3** may be held by the retention frame **25**, but the rear wheel **2** (the driving wheel) may not be held by the retention frame **25**. In the configuration in which the intermediate wheel **3** is held by the retention frame **25** but the rear wheel **2** (the driving wheel) is not held by the retention frame **25**, the pivot shaft **28** may be provided for an intermediate portion between the intermediate wheel holder **25***a* of the retention frame **25** and a wheel holder placed in a portion other than the retention frame **25**. The pivot shaft **28** is provided for the retention frame **25**.

(11) The above example embodiment deals with an example in which the vehicle body frame **15** supports the intermediate portion **25***c* of the retention frame **25**, but the vehicle body frame **15** may support any portion of the retention frame **25** in such a manner that the retention frame **25** is swingable.

(12) The above example embodiment deals with an example in which the pivot shaft axis Y is between the wheel holder **25***b* and the intermediate wheel holder **25***a*, but the pivot shaft axis Y may be placed in any portion of the retention frame **25**.

(13) The above example embodiment deals with an example in which the retention frame **25** is swingably supported by the vehicle body frame **15** with the pivot shaft axis Y being as a swing pivot, but the retention frame **25** may be supported in such a manner as not to be swingable relative to the vehicle body frame **15**.

(14) The above example embodiment deals with an example in which the pivot shaft **28** is provided, but a structure to swingably couple the retention frame **25** to the vehicle body frame **15** may be any coupling structure such as a link mechanism, other than the pivot shaft.

(15) The above example embodiment deals with an example in which the pivot shaft **28** is provided for the intermediate portion **25***c*, but the pivot shaft **28** may be provided for any portion of the retention frame **25**.

(16) In the above example embodiment, the hydraulic cylinder **63** as an actuator to swing the retention frame **25** is provided, but no actuator may be provided.

(17) In the above example embodiment, a hydraulic cylinder is used as the actuator to swing the retention frame **25**, but an electric motor, a hydraulic motor, or the like is also useable instead of the hydraulic cylinder.

(18) In the above example embodiment, the accumulator **78** is provided, but no accumulator may be provided.

(19) The above example embodiment deals with an example in which the retention frame **25** extends in the front-rear direction below the rear-wheel fender **14** while the retention frame **25** overlaps with the rear-wheel fender **14** in a plan view. However, the retention frame **25** may be provided in any arrangement.

(20) The above example embodiment deals with an example in which the retention frame **25** passes through a space between the rear wheel **2** and the transmission case **19** in the front-rear direction. However, the retention frame **25** may be provided in any arrangement.

(21) The above example embodiment deals with an example in which the rear axle **2***a* is laterally outward of the retention frame **25** in the vehicle-body width direction, but the present invention is not limited to this. The rear axle **2***a* may be at any position relative to the retention frame **25**, e.g., the rear axle **2***a* may be laterally inward of the retention frame **25** in the vehicle-body width direction.

(22) The above example embodiment deals with an example in which the center C**1** of the retention frame **25** is rearward of the center C**2** of the vehicle body frame **15**, but the present invention is not limited to this. The center C**1** of the retention frame **25** may be at the same position as the center C**2** in the vehicle-body front-rear direction or may be forward of the center C**2**.

(23) The above example embodiment deals with an example in which the intermediate-wheel power transmission **41** and the wheel power transmission **51** are provided for the retention frame **25**, but the intermediate-wheel power transmission **41** and the wheel power transmission **51** may not be provided for the retention frame **25**.

(24) The above example embodiment deals with an example in which the intermediate-wheel power transmission and the wheel power transmission are provided inside the retention frame **25**, but the present invention is not limited to this. The intermediate-wheel power transmission and the wheel power transmission may be provided outside the retention frame.

(25) The above example embodiment deals with an example in which the input section **34** is provided. However, the input section **34** may not be provided, and a driving force from the transmission **17** may be transmitted individually to the intermediate-wheel power transmission **41** and the wheel power transmission **51**.

(26) The above example embodiment deals with an example in which the intermediate-wheel power transmission **41** and the wheel power transmission **51** each include an endless roller chain, but the present invention is not limited to this. The intermediate-wheel power transmission **41** and the wheel power transmission **51** may each include a rotation transmission shaft.

(27) The above example embodiment deals with an example in which the first transmission wheel body **42** and the second transmission wheel body **52** on the pivot shaft side, the transmission wheel bodies **44**, **54** on the wheel side, and the endless roller transmission bodies **45**, **55** are provided, but they may not be provided.

(28) The above example embodiment deals with an example in which the tension operating structures **49**, **59**, and the biasing mechanisms **49***a*, **59***a* are provided, but they may not be provided.

(29) The above example embodiment deals with an example in which the power transmission **33** that can be braked, but the power transmission **33** may not be provided.

(30) The above example embodiment deals with an example in which the intermediate-wheel gear transmission section **46** and the wheel gear transmission section **56** are provided, but the intermediate-wheel gear transmission section **46** and the wheel gear transmission section **56** may not be provided. In a case where the intermediate-wheel gear transmission section **46** and the wheel gear transmission section **56** are provided, the intermediate-wheel gear transmission section **46** and the wheel gear transmission section **56** may be configured to output power without changing the rotation direction of power from the input section **34** to its reverse direction.

(31) The above example embodiment deals with an example in which the rear wheel **2** is held by the wheel holder **25***b*, but the front wheel **1** may be held by the wheel holder **25***b*, instead of the rear wheel **2**.

(32) The above example embodiment deals with an example in which the position of the wheel adjacent portion **25***d* is higher than the position of the intermediate-wheel adjacent portion **25***e* such that the wheel adjacent portion **25***d* is inclined, but the retention frame **25** may have any shape.

(33) The above example embodiment deals with an example in which the position of the upper end **91***t* of the cover **91** is higher than the position of the upper end **3***t* of the intermediate wheel **3**, but the present invention is not limited to this. The position of the upper end **91***t* of the cover **91** may be the same as the position of the upper end **3***t* of the intermediate wheel **3** in the up-down direction. Alternatively, the position of the upper end **91***t* of the cover **91** may be lower than the position of the upper end **3***t* of the intermediate wheel **3**.

(34) The above example embodiment deals with an example in which the position of the upper end **91***t* of the cover **91** is lower than the position of the upper end **2***t* of the rear wheel **2**, but the present invention is not limited to this. The position of the upper end **91***t* of the cover **91** may be the same as the position of the upper end **2***t* of the rear wheel **2** in the up-down direction. Alternatively, the position of the upper end **91***t* of the cover **91** may be higher than the position of the upper end **2***t* of the rear wheel **2**, depending on the dimension of the outside diameter of the rear wheel **2**.

(35) The above example embodiment deals with an example in which the end portion **91***r* of the cover **91** is at a position facing the rear-wheel fender **14**, but the end portion **91***r* of the cover **91** may not face the rear-wheel fender **14**.

(36) The above example embodiment deals with an example in which the cover **91** extends from the position facing the end portion **7***t* of the engine bonnet **7** to the position facing the end portion of the rear-wheel fender **14**, but this configuration may not be provided.

(37) The above example embodiment deals with an example in which the footboard **93** is provided, but the footboard **93** may not be provided.

(38) The above example embodiment deals with an example in which the footboard **93** has a circular shape, but the footboard **93** may not have a circular shape. For example, the footboard **93** may have any shape such as a bar shape extending outward from an axle center.

(39) The above example embodiment deals with an example in which the bar-shaped bodies **93***b* are arranged at intervals in the circumferential direction of the footboard **93**, but no bar-shaped bodies may be provided. That is, the footboard **93** may have a circular shape with no hole being provided in the circumference of the footboard **93**.

(40) The above example embodiment deals with an example in which the fuel tank **8** is provided laterally outward of the right side of the engine bonnet **7**, but the fuel tank **8** may be provided laterally outward of the left side of the engine bonnet **7**. The fuel tank **8** is provided on each lateral side of the engine bonnet **7**.

(41) The above example embodiment deals with an example in which an actuator configured to change the position of the pivot shaft **28** is provided, but no actuator may be provided.

(42) The above example embodiment deals with an example in which the position change cylinder **108** is used as the actuator, but the present invention is not limited to this. An electric motor, a hydraulic motor, or the like may be used.

(43) The above example embodiment deals with an example in which the first detector **111**, the second detector **112**, the third detector **113**, and the manipulator **114** are provided, but only any one of them, any two of them, or any three of them may be provided.

(44) In the above example embodiment, the steering wheel **11** is used as a steering operation tool, but various operation tools having different forms such as a steering lever can be used.

(45) The above example embodiment deals with an example in which the coupler is provided, but no coupler may be provided.

The configurations described in the above example embodiments (including the alternative example embodiments, the same applies hereinafter) can be applied in combination with configurations of other example embodiments as long as no inconsistency occurs. Further, the example embodiments disclosed in the present specification are just examples. The example embodiments of the present invention are not limited to this, and various modifications can be made within a range that does not deviate from the scope of the present invention.

Example embodiments of the present invention are not limited to tractors and are applicable to various work machines and agricultural machines such as rice transplanters and chemical agents.

While example embodiments of the present invention have been described above, it is to be understood that variations and modifications will be apparent to those skilled in the art without departing from the scope and spirit of the present invention. The scope of the present invention, therefore, is to be determined solely by the following claims.

What is claimed is:

1. A work machine, comprising:

a front wheel;

a rear wheel;

an intermediate wheel between the front wheel and the rear wheel; and

a transmission to receive a driving force from a drive source and transmit the driving force to the intermediate wheel and at least one of the front wheel or the rear wheel that is drivable as a driving wheel; wherein

the intermediate wheel has an outside diameter smaller than an outside diameter of the driving wheel.

2. The work machine according to claim **1**, further comprising:

a vehicle body frame including the transmission to transmit the driving force to the at least one of the front wheel or the rear wheel; and

a retention frame holding the intermediate wheel such that the intermediate wheel is rotatable and capable of transmitting the driving force from the transmission to the intermediate wheel.

3. The work machine according to claim **2**, wherein the retention frame includes:

an intermediate wheel holder holding the intermediate wheel such that the intermediate wheel is rotatable;

a wheel holder holding at least one wheel out of the front wheel and the rear wheel such that the at least one wheel is rotatable; and

a pivot shaft provided for an intermediate portion of the retention frame which intermediate portion is between the intermediate wheel holder and the wheel holder, the pivot shaft being coupled to the vehicle body frame.

4. The work machine according to claim **3**, further comprising:

a wheel power transmission provided for the retention frame to transmit the driving force from the transmission to the at least one wheel held by the wheel holder; and

an intermediate-wheel power transmission provided for the retention frame to transmit the driving force from the transmission to the intermediate wheel.

5. The work machine according to claim **4**, further comprising:

an input section provided for the pivot shaft to receive the driving force from the transmission; wherein

the driving force from the input section is transmitted to the wheel power transmission; and

the driving force from the input section is transmitted to the intermediate-wheel power transmission.

6. The work machine according to claim **5**, wherein the retention frame includes the wheel holder to hold the at least one wheel out of the front wheel and the rear wheel such that the at least one wheel is rotatable.

7. The work machine according to claim **5**, further comprising:

a power transmission to receive the driving force from the transmission and transmit the driving force to the input section; wherein

the power transmission is capable of being braked.

8. The work machine according to claim **5**, wherein the wheel power transmission and the intermediate-wheel power transmission each include an endless roller chain.

9. The work machine according to claim **5**, wherein the wheel power transmission and the intermediate-wheel power transmission each include a gear transmission section.

10. The work machine according to claim **9**, wherein the gear transmission section is operable to change a rotation direction of power from the input section so as to cause the at least one wheel and the intermediate wheel held by the

intermediate wheel holder to rotate in a direction reverse to a rotation direction of the input section, and output the power.

11. The work machine according to claim **3**, wherein the retention frame is supported by the vehicle body frame so as to be swingable around a pivot shaft axis of the pivot shaft as a swing axis which pivot shaft axis extends along a width of a body of the work machine.

12. The work machine according to claim **3**, wherein the wheel holder holds the rear wheel.

13. The work machine according to claim **6**, wherein

the retention frame includes a wheel-side portion and an intermediate-wheel-side portion, the wheel-side portion extending from the intermediate portion toward the wheel holder, the intermediate-wheel-side portion extending from the intermediate portion toward the intermediate wheel holder; and in a side view of a body of the work machine:

the wheel-side portion is higher in position than the intermediate-wheel-side portion; and

the wheel-side portion is inclined away from the intermediate portion.

14. A work machine, comprising:

a boarding operation section provided for a rear portion of a vehicle body of the work machine;

a front wheel;

a rear wheel;

an intermediate wheel between the front wheel and the rear wheel; and

a retention frame provided laterally outward of a vehicle body frame of the work machine to hold the intermediate wheel and the rear wheel; wherein

the retention frame extends in a front-rear direction below the operation section in a side view of the vehicle body.

15. The work machine according to claim **14**, wherein the retention frame has a center in the front-rear direction which center is rearward of a center of the vehicle body frame in the front-rear direction.

16. The work machine according to claim **14**, further comprising:

a pivot shaft including a pivot shaft axis extending in along a width of the body; wherein

the retention frame is coupled to the vehicle body frame with use of the pivot shaft and held by the vehicle body frame so as to be swingable around the pivot shaft axis as a swing axis; and

the intermediate wheel and the rear wheel are attached to the vehicle body frame via the retention frame in so as to be vertically swingable.

17. The work machine according to claim **14**, further comprising:

an actuator to operate the retention frame; wherein

the actuator is capable of changing the retention frame between a first posture in which the intermediate wheel and the rear wheel are grounded and a second posture in which the intermediate wheel is ungrounded.

18. The work machine according to claim **14**, further comprising:

a coupler to couple a work device with the vehicle body so as to allow the vehicle body to tow the work device.

* * * * *